VACUUM SOLUTIONS

R5

Oil-Lubricated Rotary Vane Vacuum Pumps
KB 0010 E, KB 0016 E
KC 0010 E, KC 0016 E

Instruction Manual

SERVICE
AND SPARE PARTS, INSTRUCTION MANUALS ...
WWW.BUSCHVACUUM.COM/SERVICE-CONTACT
VACUUM APP

0870169526 | A0008_en-US | Original instructions

2025/02/19

Table of Contents

1 Safety ... 3

2 Product Description ... 4

2.1 Operating Principle ... 5

2.2 Intended Use ... 5

2.3 Start Controls ... 5

2.4 Optional Accessories ... 6

2.4.1 Gas Ballast Valve ... 6

2.4.2 Inlet Filter ... 6

3 Transport ... 7

4 Storage ... 8

5 Installation ... 9

5.1 Installation Conditions ... 9

5.2 Connecting Lines / Pipes ... 10

5.2.1 Inlet Connection ... 10

5.2.2 Discharge Connection ... 10

5.3 Filling Oil ... 11

6 Electrical Connection ... 12

6.1 Machine delivered without Control Box or Variable Speed Drive (VSD) ... 12

6.2 Wiring Diagram Single-Phase Motor ... 13

6.3 Wiring Diagram Three-Phase Motor ... 13

7 Commissioning ... 15

7.1 Conveying Condensable Vapors ... 16

8 Maintenance ... 17

8.1 Maintenance Schedule ... 18

8.2 Oil Level Inspection ... 18

8.3 Oil Change ... 18

8.4 Exhaust Filter Change ... 20

9 Overhaul ... 21

10 Decommissioning ... 22

10.1 Dismantling and Disposal ... 22

11 Spare Parts ... 23

12 Troubleshooting ... 24

13 Technical Data ... 26

14 Oil ... 27

15 EU Declaration of Conformity ... 28

16 UK Declaration of Conformity ... 29

1 Safety

Prior to handling the machine, this instruction manual should be read and understood. If anything needs to be clarified, please contact your manufacturer representative.

Read this manual carefully before use and keep for future reference.

This instruction manual remains valid as long as the customer does not change anything on the product.

The machine is intended for industrial use. It must be handled only by technically trained personnel.

Always wear appropriate personal protective equipment in accordance with the local regulations.

The machine has been designed and manufactured in accordance with the state-of-the-art methods. Nevertheless, residual risks may remain, as described in the following chapters and in accordance with the chapter *Intended Use* [➔ 5].

This instruction manual highlights potential hazards where appropriate. Safety notes and warning messages are tagged with one of the keywords DANGER, WARNING, CAUTION, NOTICE and NOTE as follows:

DANGER

... indicates an imminent dangerous situation that will result in death or serious injuries if not prevented.

WARNING

... indicates a potentially dangerous situation that could result in death or serious injuries.

CAUTION

... indicates a potentially dangerous situation that could result in minor injuries.

NOTICE

... indicates a potentially dangerous situation that could result in damage to property.

NOTE

... indicates helpful tips and recommendations, as well as information for efficient and trouble-free operation.

2 Product Description

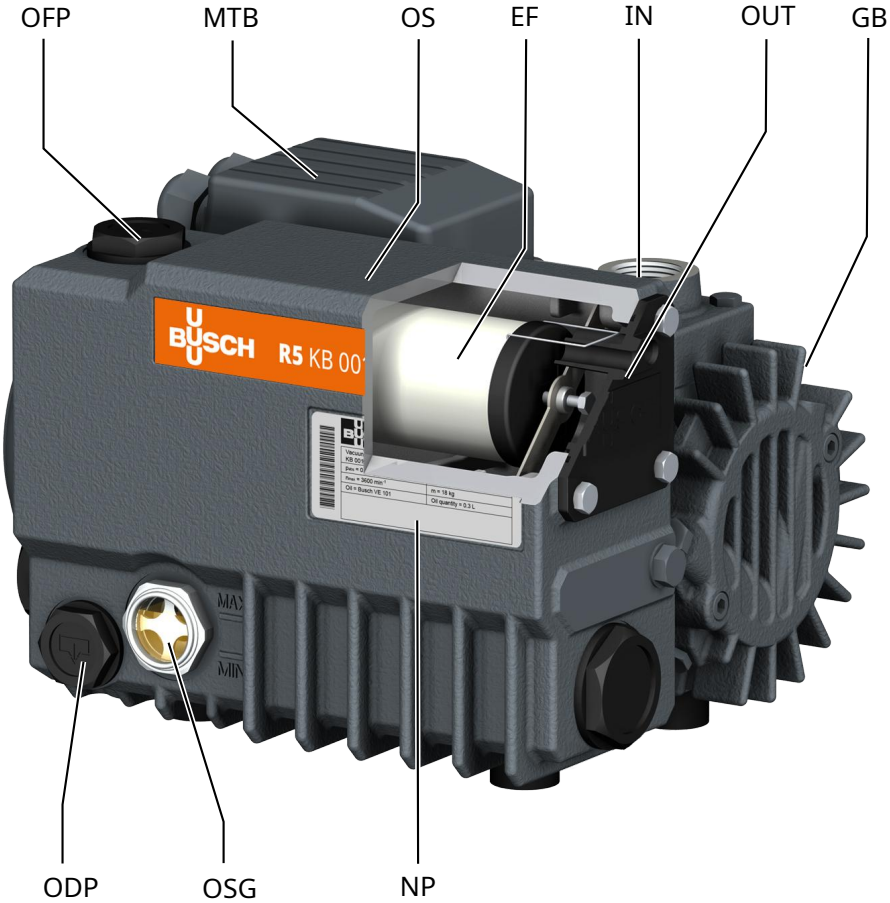

Description			
OFP	Oil fill plug	MTB	Motor terminal box
OS	Oil separator	EF	Exhaust filter
IN	Suction connection	OUT	Discharge connection
GB	Gas ballast valve	ODP	Oil drain plug
OSG	Oil sight glass	NP	Nameplate

NOTE

Technical term.

In this instruction manual, we consider that the term ‘machine’ refers to the ‘vacuum pump’.

NOTE

Illustrations.

In this instruction manual, the illustrations may differ from the appearance of the machine.

2.1 Operating Principle

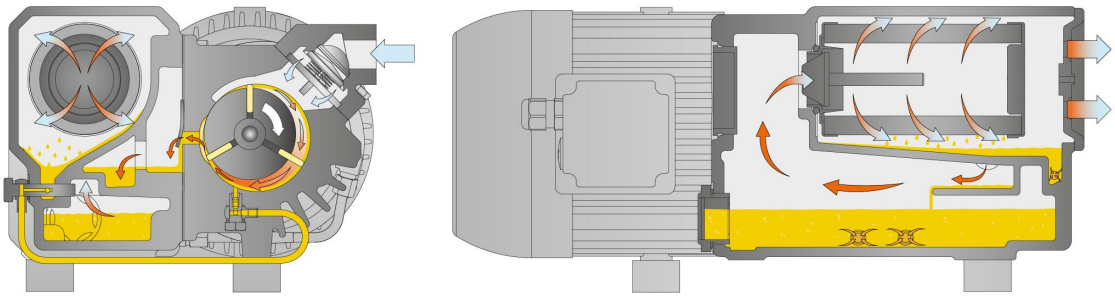

The machine works on the rotary vane principle.

The oil seals the gaps, lubricates the vanes and takes away compression heat.

In order to avoid reverse rotation after switching off, the machine is equipped with a non-return valve (NRV).

In order to avoid solids from entering, the machine is equipped with an inlet screen (IS).

Exhaust filters separate the oil from the discharged gas.

2.2 Intended Use

WARNING

In case of foreseeable misuse outside the intended use of the machine.

Risk of injuries!

Risk of damage to the machine!

Risk of damage to the environment!

- Make sure to follow all instructions described in this manual.

The machine is intended for the suction of air and other dry, non-aggressive, non-toxic, non-ignitable and non-explosive gases.

Conveying of other media leads to an increased thermal and/or mechanical load on the machine and is permissible only after a consultation with the manufacturer.

The machine is intended for placement in a non-potentially explosive environment.

The machine is designed for indoor installations. For outdoor installations, consult your Busch representative for special precautions.

The machine is capable of maintaining ultimate pressure, see *Technical Data* [➔ 26].

The KC version is suitable for continuous operation.

The KB version is suitable for continuous operation up to 100 mbar.

Permitted environmental conditions, see *Technical Data* [➔ 26].

2.3 Start Controls

The machine comes without start controls. The control of the machine is to be provided in the course of installation.

The machine can be equipped with a soft-starter.

2.4 Optional Accessories

2.4.1 Gas Ballast Valve

The gas ballast valve mixes the process gas with a limited quantity of ambient air to counteract the condensation of vapor inside the machine.

The gas ballast valve has an influence on the ultimate pressure of the machine, see *Technical Data* [➔ 26].

2.4.2 Inlet Filter

The inlet filter protects the machine against dust and other solids in the process gas. The inlet filter is available with a paper or polyester cartridge.

3 Transport

NOTICE

In case the machine is already filled with oil.

Tilting a machine that is already filled with oil can cause large quantities of oil to ingress into the cylinder. Starting the machine with excessive quantities of oil in the cylinder will immediately break the vanes and ruin the machine!

- Drain the oil prior to every transport or always horizontally transport the machine.

- To find out the weight of the machine, refer to the chapter *Technical Data* [➔ 26] or the nameplate (NP).

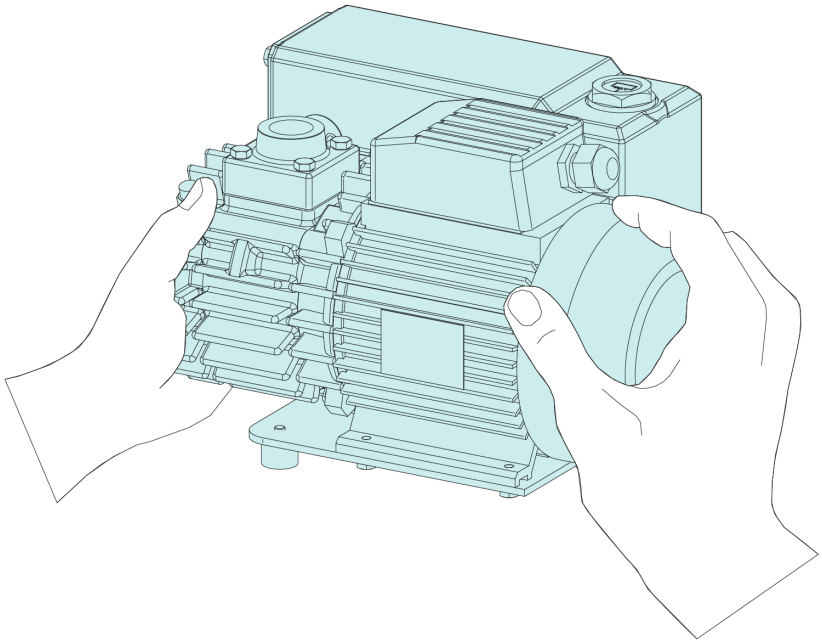

- Check the machine for transport damage.

If the machine is secured to a base plate:

- Remove the machine from the base plate.

4 Storage

- Seal hermetically all apertures with the caps provided with the machine, or with adhesive tape if the caps are no longer available.
- Store the machine indoors, in a dry place, away from dust and vibrations and if possible, in original packaging, preferably at temperatures between 0 ... 40 °C.

If the machine is to be stored for more than 3 months:

- Seal hermetically all apertures with the caps provided with the machine, or with adhesive tape if the caps are no longer available.
- Wrap the machine in a corrosion inhibitor film.
- Store the machine indoors, in a dry place, away from dust and vibrations and if possible, in original packaging, preferably at temperatures between 0 ... 40 °C.

5 Installation

5.1 Installation Conditions

NOTICE

Use of the machine outside of the permitted installation conditions.

Risk of premature failure!

Loss of efficiency!

- Make sure that the installation conditions are fully respected.

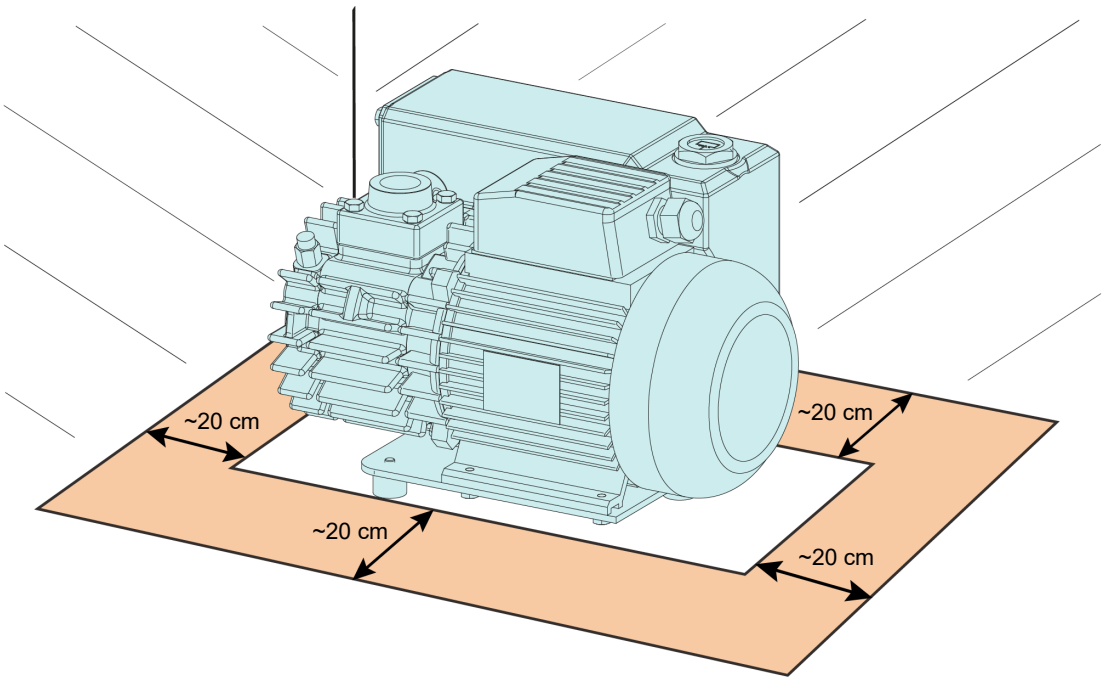

- Make sure that the environment of the machine is not potentially explosive.
- Make sure that the ambient conditions comply with the *Technical Data* [➔ 26].
- Make sure that the environmental conditions comply with the protection class of the motor and the electrical elements.
- Make sure that the installation space or location is protected from weather and lightning.
- Make sure that the installation space or location is vented such that sufficient cooling of the machine is provided.
- Make sure that cooling air inlets and outlets are not covered or obstructed and that the cooling air flow is not affected adversely in any other way.
- Make sure that the oil sight glass (OSG) remains easily visible.
- Make sure that enough space remains for maintenance work.
- Make sure that the machine is placed or mounted horizontally, a maximum deviation of 1° in any direction is acceptable.
- Check the oil level, fill up if necessary, see *Filling Oil* [➔ 11].
- Make sure that all provided covers, guards, hoods, etc. are mounted.

If the machine is installed at an altitude greater than 1000 meters above sea level:

- Contact your manufacturer representative, the motor must be derated or the ambient temperature limited.

5.2 Connecting Lines / Pipes

- Remove all protective covers before installation.
- Make sure that the connection lines cause no stress on the connections of the machine. Therefore, we recommend installing flexible lines at the inlet and discharge connections.
- Make sure that the diameter of the connection lines over the entire length is at least as large as the connections of the machine.

In case of long connection lines:

- Use larger diameters to avoid a loss of efficiency.
- Contact your manufacturer representative for more information.

5.2.1 Inlet Connection

NOTICE

Ingress of foreign objects or liquids.

Risk of damage to the machine!

If the inlet gas contains dust or other foreign solid particles:

- Install a suitable filter (5 micron or less) at the inlet of the machine.

Connection size(s):

– G ¾"

Depending on the specific configuration ordered, other connection dimensions may apply.

- Make sure that the connection lines cause no stress on the connections of the machine. Therefore, we recommend installing flexible lines at the inlet and discharge connections.

5.2.2 Discharge Connection

CAUTION

The discharge gas contains small quantities of oil.

Risk to health!

If air is discharged into rooms where persons are present:

- Make sure that sufficient ventilation is provided.

NOTICE

Discharge gas flow obstructed.

Risk of damage to the machine!

- Make sure that the discharged gas will flow without obstruction. Do not shut off or throttle the discharge line or use it as a pressurized air source.

Connection size(s):

– Without connection. The discharged gas is released to the ambient of the machine.

Depending on the specific configuration ordered, other connection dimensions may apply.

Unless the aspirated air is discharged to the environment right at the machine.

- Make sure that the discharge line either slopes away from the machine or provide a liquid separator or a siphon with a drain cock, so that no liquids can flow back into the machine.

- Make sure that the connection lines cause no stress on the connections of the machine. Therefore, we recommend installing flexible lines at the inlet and discharge connections.

5.3 Filling Oil

NOTICE

Use of an inappropriate oil.

Risk of premature failure!

Loss of efficiency!

- Only use an oil type which has previously been approved and recommended by the manufacturer.

For oil type and oil capacity see *Technical Data* [➔ 26] and *Oil* [➔ 27].

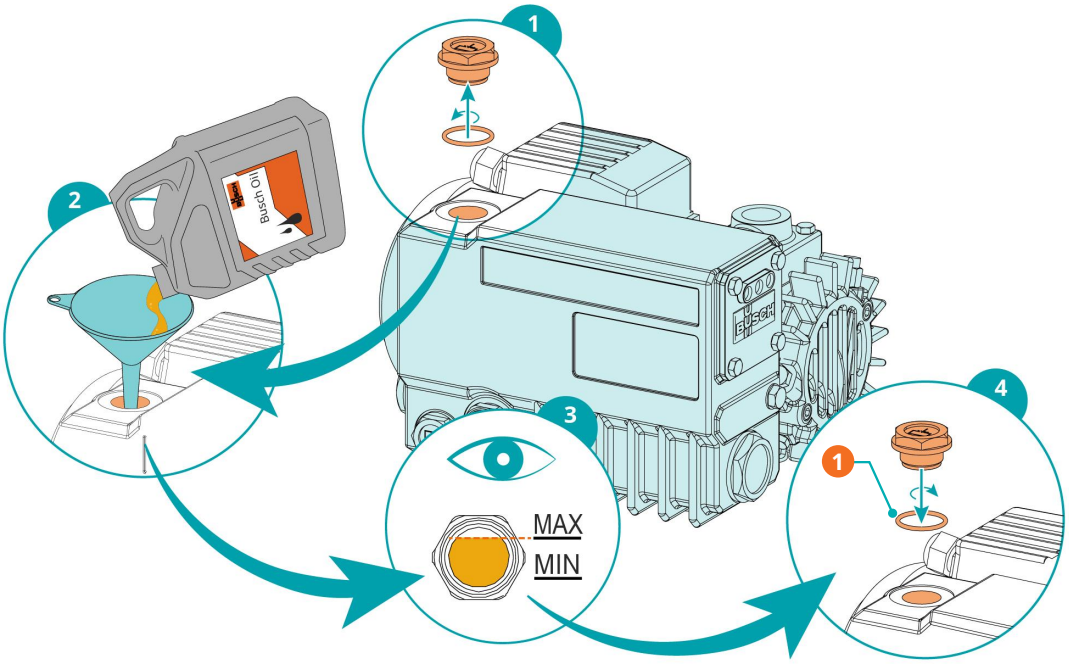

Description			
1	1x o-ring, part no.: 0486 000 590		

6 Electrical Connection

DANGER

Live wires.

Risk of electrical shock!

- Electrical installation work must only be executed by qualified personnel.

INSTALLATION(S) CURRENT PROTECTION:

DANGER

Missing current protection.

Risk of electrical shock!

- Provide current protection in accordance with EN 60204-1 on your installation(s).
- The electrical installation must comply with the applicable national and international standards.

NOTICE

Electromagnetic compatibility.

- Make sure that the motor of the machine will not be affected by electric or electromagnetic disturbance from the mains. If necessary, contact your Busch representative for more information.
- Make sure that the EMC of the machine is compliant with the requirements of your supply network system, if necessary, provide further interference suppression (EMC of the machine, see *EU Declaration of Conformity* [➔ 28] or *UK Declaration of Conformity* [➔ 29]).

6.1 Machine delivered without Control Box or Variable Speed Drive (VSD)

DANGER

Live wires.

Risk of electrical shock!

- Electrical installation work must only be executed by qualified personnel.

- Make sure that the power supply for the motor is compatible with the data on the nameplate of the motor.
- If the machine is equipped with a power connector, install a residual current protective device to protect persons in case of a defective insulation.
  - Busch recommends installing a type B residual protective device suitable for the electrical installation.
- Provide a lockable disconnect switch or an emergency stop switch on the power line so that the machine is completely secured in case of an emergency situation.

- Provide a lockable disconnect switch on the power line so that the machine is completely secured during maintenance tasks.
- Provide an overload protection according to EN 60204-1 for the motor.
  - Busch recommends installing a D-curve circuit breaker.
- Connect the protective earth conductor.
- Electrically connect the motor.

NOTICE

Incorrect connection.

Risk of damage to the motor!

- The wiring diagrams given below are typical. Check the inside of the terminal box for motor connection instructions/diagrams.

6.2 Wiring Diagram Single-Phase Motor

Motor with connection cable:

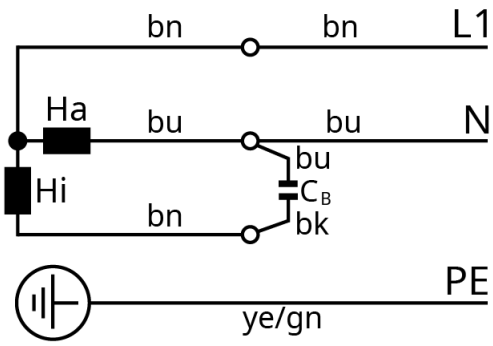

Ha = Main phase; Hi = Auxiliary phase; C = Permanent capacitor

bk = Black; bn = Brown; bu = Blue; ye/gn =Yellow/green

6.3 Wiring Diagram Three-Phase Motor

NOTICE

Incorrect direction of rotation.

Risk of damage to the machine!

- Operation in the wrong direction of rotation can destroy the machine in a short time! Prior to start-up, ensure that the machine is operated in the right direction.

- Determine the intended direction of rotation with the arrow (stuck on or cast).
- Jog the motor briefly.

If the rotation of the motor must be changed:

- Switch any two of the motor phase wires.

Delta connection (low voltage):

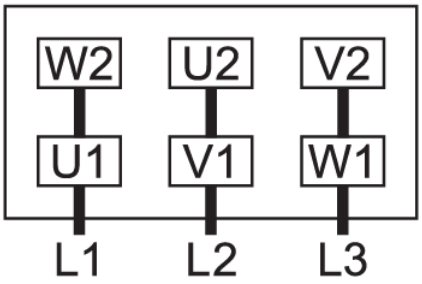

Star connection (high voltage):

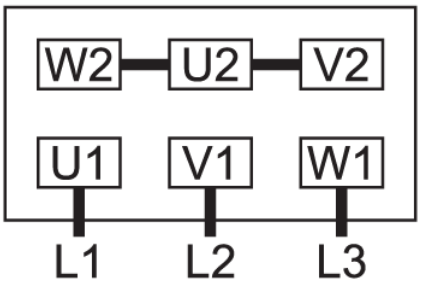

7 Commissioning

CAUTION

During operation the surface of the machine can reach temperatures over 70°C.

Risk of burns!

- Avoid contact with the machine during and directly after operation.

CAUTION

Noise of running machine.

Risk of damage to hearing!

If people are present in the vicinity of a machine that is not insulated from noise for extended periods of time:

- Make sure to wear hearing protection.

NOTICE

The machine is normally shipped without oil.

Operation without oil will ruin the machine in short time!

- Prior to commissioning, the machine must be filled with oil, see *Filling Oil* [➔ 11].

- Make sure that the *Installation Conditions* [➔ 9] are met.
- Start the machine.
- Make sure that the maximum permissible number of starts does not exceed 30 starts per hour. Those starts should be spread within the hour.
- Make sure that the operating conditions comply with the *Technical Data* [➔ 26].
- After a few minutes of operation, check the oil level and top up if necessary.

As soon as the machine is operated under normal operating conditions:

  - Measure the motor current and record it as reference for future maintenance and troubleshooting work.

7.1 Conveying Condensable Vapors

CAUTION

Venting the machine.

The discharged gases and/or liquids may reach temperatures above 70°C!

Risk of burns!

- Avoid direct contact with the flow of gases and/or liquids.

CAUTION

Noise of running machine.

Risk of damage to hearing!

If people are present in the vicinity of a machine that is not insulated from noise for extended periods of time:

- Make sure to wear hearing protection.

Water vapor within the gas flow is tolerated within certain limits. The conveyance of other vapors shall be agreed upon with the manufacturer.

If condensable vapors are to be conveyed:

Before process:

- Warm up the machine for approximately half an hour.

After process:

- Operate the machine for approximately another half an hour.

8 Maintenance

DANGER

Live wires.

Risk of electrical shock!

- Electrical installation work must only be executed by qualified personnel.

WARNING

The machine is contaminated with hazardous material.

Risk of poisoning!

Risk of infection!

If the machine is contaminated with hazardous material:

- Wear appropriate personal protective equipment.

CAUTION

Hot surface.

Risk of burns!

- Before doing anything that requires touching the machine, let it cool down first.

CAUTION

Hot liquids.

Risk of burns!

- Before draining liquids, let the machine cool down first.

CAUTION

Failing to properly maintain the machine.

Risk of injuries!

Risk of premature failure and loss of efficiency!

- Maintenance work must only be executed by qualified personnel.
- Respect the maintenance intervals or ask your Busch representative for service.

NOTICE

Using inappropriate cleaners.

Risk of removing safety stickers and protective paint!

- Do not use incompatible solvents to clean the machine.

- Stop the machine and lock it to prevent accidental start-up.
- Vent the connected lines to atmospheric pressure.

If necessary:

  - Disconnect all connections.

8.1 Maintenance Schedule

The maintenance intervals depend very much on the individual operating conditions. The intervals given below are considered as starting values which should be individually shortened or extended as appropriate.

Particularly harsh applications or heavy duty operation, such as high dust loads in the environment or in the process gas, other contamination or ingress of process material, can make it necessary to shorten the maintenance intervals significantly.

Interval	Maintenance work
Weekly	• Check the oil level, see *Oil Level Inspection* [➔ 18]. • Check the machine for oil leaks - in case of leaks have the machine repaired (contact Busch).
Monthly	In case of an inlet filter being installed: • Check the inlet filter cartridge, replace if necessary.
Every 2000 hours or every 6 months	• Change the oil and the exhaust filters (EF).
Every 5 years	• Have a major overhaul on the machine (contact the manufacturer).

8.2 Oil Level Inspection

- Stop the machine.
- Wait 1 minute.
- Check the oil level.
- Fill up if necessary, see *Filling Oil* [➔ 11].

8.3 Oil Change

NOTICE

Use of an inappropriate oil.

Risk of premature failure!

Loss of efficiency!

- Only use an oil type which has previously been approved and recommended by the manufacturer.

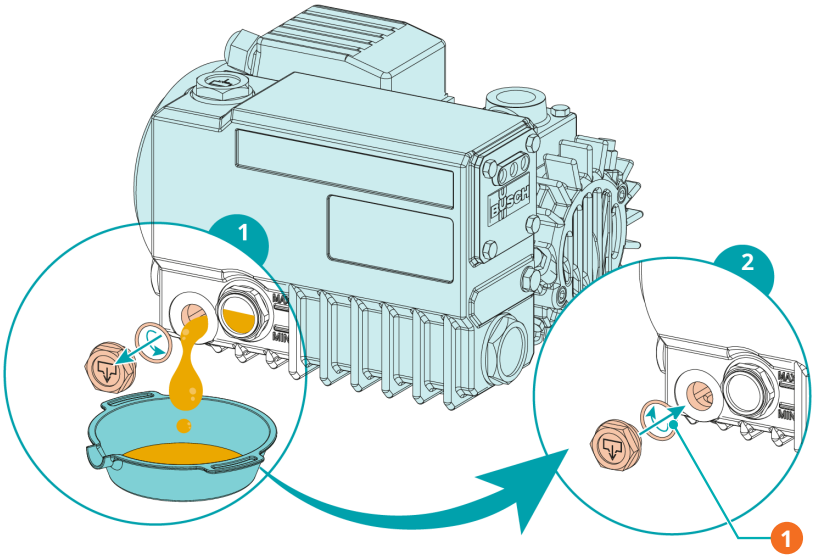

Description			
1	1x o-ring, part no.: 0486 000 505		

For oil type and oil capacity see *Technical Data* [➔ 26] and *Oil* [➔ 27].

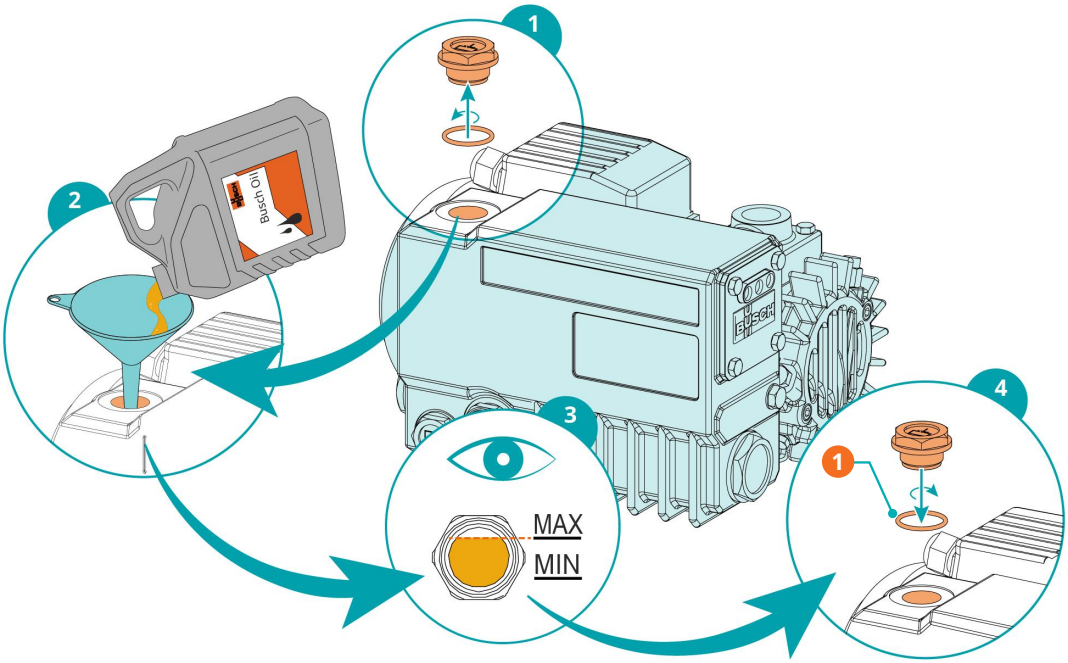

Description			
1	1x o-ring, part no.: 0486 000 590		

8.4 Exhaust Filter Change

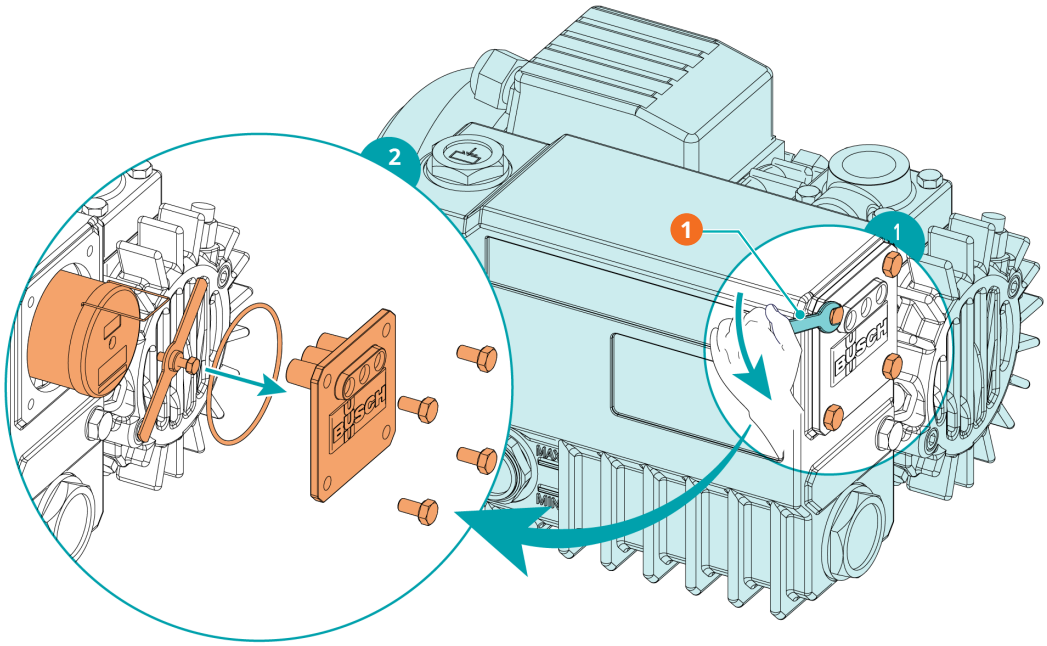

Description			
1	10 mm wrench		

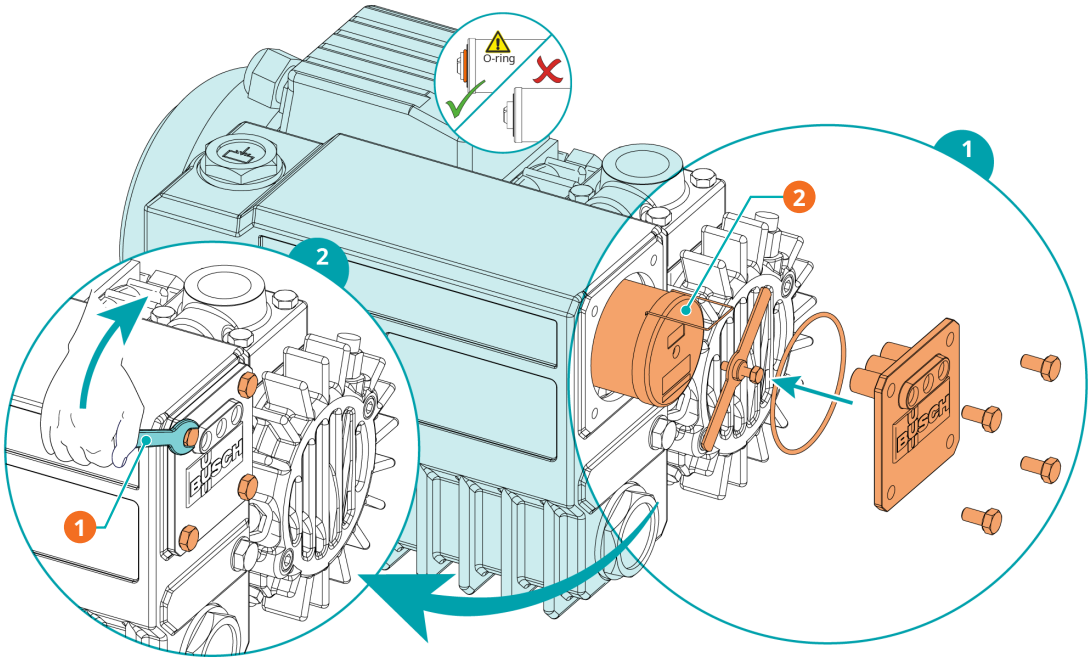

Description			
1	10 mm wrench	2	Busch genuine spare parts 1x Exhaust filter (EF), part no.: 0532 140 154

9 Overhaul

WARNING

The machine is contaminated with hazardous material.

Risk of poisoning!

Risk of infection!

If the machine is contaminated with hazardous material:

- Wear appropriate personal protective equipment.

NOTICE

Improper assembly.

Risk of premature failure!

Loss of efficiency!

- Any dismantling of the machine that goes beyond anything that is described in this manual should be done by manufacturer authorized technicians.

If the machine has conveyed gas contaminated with foreign materials which are hazardous to health:

- Decontaminate the machine as much as possible and state the contamination status in a ‘Declaration of Contamination’.

The manufacturer will only accept machine accompanied by a signed, fully completed and legally binding "declaration of contamination", downloadable from the following link: *buschvacuum.com/declaration-of-contamination*.

10 Decommissioning

Live wires.

Risk of electrical shock!

- Electrical installation work must only be executed by qualified personnel.

Hot surface.

Risk of burns!

- Before doing anything that requires touching the machine, let it cool down first.

Hot liquids.

Risk of burns!

- Before draining liquids, let the machine cool down first.

- Stop the machine and lock it to prevent accidental start-up.
- Disconnect the power supply.
- Vent the connected lines to atmospheric pressure.
- Disconnect all connections.

If the machine is to be stored:

- See *Storage* [➔ 8].

10.1 Dismantling and Disposal

- Drain and collect the oil.
- Make sure that no oil drips onto the floor.
- Remove the exhaust filters.
- Separate special waste from the machine.
- Dispose of special waste in compliance with applicable regulations.
- Dispose of the machine as scrap metal.

11 Spare Parts

NOTICE

Use of non-Busch genuine spare parts.

Risk of premature failure!

Loss of efficiency!

- Use only Busch genuine spare parts, consumables and supplies to ensure correct operation of the machine and to validate the warranty.

Spare part kit	Description	Part no.
Service kit	Includes all the necessary parts for maintenance.	0992 106 535

If other parts are required:

- Contact your Busch representative.

12 Troubleshooting

DANGER

Live wires.

Risk of electrical shock!

- Electrical installation work must only be executed by qualified personnel.

CAUTION

Hot surface.

Risk of burns!

- Before doing anything that requires touching the machine, let it cool down first.

CAUTION

Hot liquids.

Risk of burns!

- Before draining liquids, let the machine cool down first.

Illustration showing parts that may be involved during troubleshooting:

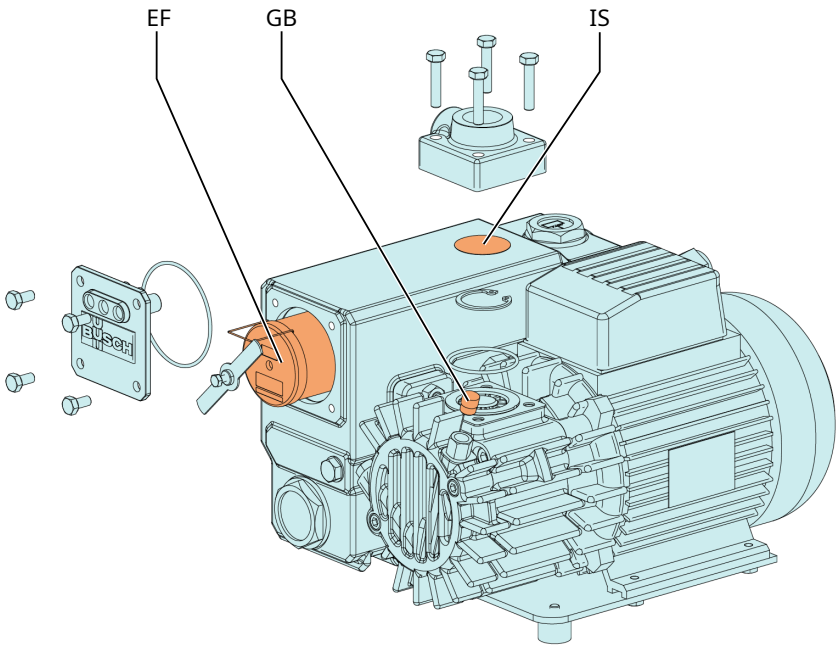

Description			
IS	Inlet screen	GB	Gas ballast valve
EF	Exhaust filter		

Problem	Possible Cause	Remedy
The machine does not start.	The motor is not supplied with the correct voltage.	• Check the power supply.
	The motor is defective.	• Repair the machine (contact Busch).
The machine does not reach the usual pressure at the inlet connection.	Oil level too low.	• Top up oil.
	The inlet screen (IS) is partially clogged.	• Clean the inlet screen (IS).
	The inlet filter cartridge (Optional) is partially clogged.	• Replace the inlet filter cartridge.
	Internal parts are worn or damaged.	• Repair the machine (Contact Busch).
The machine runs very noisily.	Stuck vanes.	• Repair the machine (contact Busch).
	Defective bearings.	• Repair the machine (contact Busch).
The machine runs too hot.	Insufficient cooling.	• Remove dust and dirt from the machine. • Check the cooling fan.
	Ambient temperature too high.	• Observe the permitted ambient temperature.
	Oil level too low.	• Top up oil.
	The exhaust filters (EF) are partially clogged.	• Replace the exhaust filters (EF).
The machine fumes or expels oil droplets through the gas discharge.	The exhaust filters (EF) are partially clogged.	• Replace the exhaust filters (EF).
	An exhaust filter (EF) with o-ring is not fitted properly.	• Ensure the correct position of the exhaust filters (EF) and the o-rings.
The oil is black.	Oil change intervals are too long.	• Flush the machine (contact Busch).
	The inlet filter (optional) is defective.	• Replace the inlet filter.
	The machine runs too hot.	• See problem "The machine runs too hot".
The oil is emulsified.	The machine sucked in liquids or significant amounts of vapor.	• Flush the machine (Contact Busch). • Clean the filter of the gas ballast valve (GB). • Modify the operational mode (see Conveying Condensable Vapors).

For resolution of problems not listed in the troubleshooting table, contact your Busch representative.

13 Technical Data

		KB 0010 E KC 0010 E	KB 0016 E KC 0016 E
Nominal pumping speed (50 / 60 Hz)	m^3/h	10 / 12	16 / 19
Ultimate pressure	hPa (mbar) abs.	see nameplate (NP)	
Nominal motor rating (50 / 60 Hz)	kW	0.37 / 0.37 special version: 0.55 / 0.55	0.55 / 0.55
Nominal motor speed (50 / 60 Hz)	min^{-1}	3000 / 3600	
Sound pressure level (ISO 2151), KpA = 3 dB	dB(A)	63 / 67	64 / 68
Operating temperature (50 Hz / 60 Hz)	°C	64 / 71	65 / 75
Ambient temperature range	°C	5 ... 40*	
Inlet gas temperature	°C	5 ... 40*	
Ambient pressure		Atmospheric pressure	
Oil capacity	l	0.3	
Weight approx.	kg	16 **	18 **

* In case of higher or lower temperatures, please consult your Busch representative.

** The weight can vary depending on the order.

14 Oil

	VM 032	VM 068	VSB 032	VSB 068
ISO-VG	32	68	32	68
Part number 1 L packaging	0831 000 086	0831 102 492	0831 168 343	0831 168 347
Part number 5 L packaging	0831 000 087	0831 102 493	0831 168 344	0831 168 348
Oil Type	Mineral Oil	Mineral Oil	Synthetic	Synthetic

	VSA 032	VSA 068
ISO-VG	32	68
Part number 1 L packaging	0831 163 958	0831 163 964
Part number 5 L packaging	0831 163 961	0831 163 965
Oil Type	Synthetic	Synthetic

In case of unfavorable ambient temperature, other oil viscosities may be used. Please consult your Busch representative for more details.

To find out which oil needs to be filled into the machine, please refer to the nameplate (NP).

Oil suitability

- **Oil VM 032**: Standard oil for operating temperatures <70°C.
- **Oil VM 068**: Standard oil for operating temperatures <80°C.
- **Oil VSA 032**: Suitable for food applications (H1)
  - With additives against corrosion
  - Light cycle operation (long downtime)
  - Operating oil temperature <100°C
  - Compliant with kosher and halal standards.
- **Oil VSA 068**: Suitable for food applications (H1)
  - With additives against corrosion
  - Light cycle operation (long downtime)
  - Operating oil temperature <100°C
  - Compliant with kosher and halal standards.
- **Oil VSB 032**: Suitable for food applications (H1)
  - Compliant with kosher and halal standards.
- **Oil VSB 068**: Suitable for food applications (H1)
  - Compliant with kosher and halal standards.

NOTE

Oil viscosity based on motor wiring (single-phase or three-phase).

- For single-phase motors, use oil with a viscosity of 032.
- For three-phase motors, use oil with a viscosity of 068.

15 EU Declaration of Conformity

This Declaration of Conformity and the CE-markings affixed to the nameplate are valid for the machine within the Busch scope of delivery. This Declaration of Conformity is issued under the sole responsibility of the manufacturer.

When this machine is integrated into a superordinate machinery the manufacturer of the superordinate machinery (this can be the operating company, too) must conduct the conformity assessment process for the superordinate machine or plant, issue the Declaration of Conformity for it and affix the CE-marking.

The manufacturer

Busch Výroba CZ s.r.o.
Svárovská 620
CZ 460 01, Liberec 11

declares that the machine: R5 KB 0010 E; R5 KB 0016 E; R5 KC 0010 E; R5 KC 0016 E

fulfill(s) all the relevant provisions from EU directives:

- ‘Machinery’ 2006/42/EC
- ‘Electromagnetic Compatibility’ (EMC) 2014/30/EU
- ‘RoHS’ 2011/65/EU Restriction of the use of certain hazardous substances in electrical and electronic equipment (incl. all related applicable amendments)

and comply(-ies) with the following harmonized standards that have been used to fulfill those provisions:

Standard	Title of the Standard
EN ISO 12100 : 2010	Safety of machinery - Basic concepts, general principles of design
EN 1012-2 : 1996 + A1 : 2009	Vacuum pumps - Safety requirements - Part 2
EN 60204-1 : 2018	Safety of machinery - Electrical equipment of machines - Part 1: General requirements
EN ISO 13857 : 2019	Safety of machinery - Safety distances to prevent hazard zones being reached by the upper and lower limbs
EN ISO 2151 : 2008	Acoustics - Noise test code for compressors and vacuum pumps - Engineering method (grade 2)
EN IEC 61000-6-2 : 2019	Electromagnetic compatibility (EMC) - Generic standards. Immunity for industrial environments
EN IEC 61000-6-4 : 2019	Electromagnetic compatibility (EMC) - Generic standards. Emission standard for industrial environments

Legal person authorized to compile the technical file and authorized representative in the EU (if the manufacturer is not located in the EU):

Busch Dienste GmbH
Schauinslandstr. 1
DE-79689 Maulburg

Liberec, 16.04.2024

Michael Dostalek

General Manager

16 UK Declaration of Conformity

This Declaration of Conformity and the UKCA-markings affixed to the nameplate are valid for the machine within the Busch scope of delivery. This Declaration of Conformity is issued under the sole responsibility of the manufacturer.

When this machine is integrated into a superordinate machinery the manufacturer of the superordinate machinery (this can be the operating company, too) must conduct the conformity assessment process for the superordinate machine or plant, issue the Declaration of Conformity for it and affix the UKCA-marking.

The manufacturer

Busch Výroba CZ s.r.o.
Svárovská 620
CZ 460 01, Liberec 11

declares that the machine: R5 KB 0010 E; R5 KB 0016 E; R5 KC 0010 E; R5 KC 0016 E

fulfill(s) all the relevant provisions from UK legislations:

- Supply of Machinery (Safety) Regulations 2008
- Electromagnetic Compatibility Regulations 2016
- Restriction of the use of certain hazardous substances in Electrical and Electronic Equipment Regulations 2012

and comply(-ies) with the following designated standards that have been used to fulfill those provisions:

Standard	Title of the Standard
EN ISO 12100 : 2010	Safety of machinery - Basic concepts, general principles of design
EN 1012-2 : 1996 + A1 : 2009	Vacuum pumps - Safety requirements - Part 2
EN 60204-1 : 2018	Safety of machinery - Electrical equipment of machines - Part 1: General requirements
EN ISO 13857 : 2019	Safety of machinery - Safety distances to prevent hazard zones being reached by the upper and lower limbs
EN ISO 2151 : 2008	Acoustics - Noise test code for compressors and vacuum pumps - Engineering method (grade 2)
EN IEC 61000-6-2 : 2019	Electromagnetic compatibility (EMC) - Generic standards. Immunity for industrial environments
EN IEC 61000-6-4 : 2019	Electromagnetic compatibility (EMC) - Generic standards. Emission standard for industrial environments

Legal person authorized to compile the technical file and importer in the UK (if the manufacturer is not located in the UK):

Busch (UK) Ltd
30 Hortonwood
Telford – UK

Liberec, 16.04.2024

Michael Dostalek

General Manager

Notes

BUSCH GROUP

The Busch Group is one of the world's largest manufacturers of vacuum pumps, vacuum systems, blowers, compressors and gas abatement systems. Under its umbrella, two well-known brands: Busch Vacuum Solutions and Pfeiffer Vacuum +Fab Solutions. Together, they offer solutions to a wide range of industries. A global network of highly competent local teams in 44 countries ensures that expert, tailor-made support is always available near you. Wherever you are. Whatever your business.

- Busch Group companies
- Busch Group production sites
- Busch Group service centers
- Busch Group local representatives

www.buschvacuum.com

www.pfeiffer-vacuum.com

0870169526 | A0008_en-US