calpeda®

# catalogue

Edition 03-09/2025

ed. 07/2025

# we connect water to people

water passion

ed. 07/2025

# WHO WE ARE

wateralia

**Water is not negotiable**

Since 1959, Calpeda has been a leader in the design and manufacture of efficient, sustainable water pumping solutions, proudly made in Italy. Our strong commitment to technology and innovation ensures that every product we create is safe, reliable, and delivers high performance. Through our advanced systems and services, we provide vital water solutions to millions of people worldwide, every day.

calpeda

ed. 07/2025

# maximum customisation

- prototyping and redesign services
- use of various materials, including cast iron, bronze, and steell
- supply of special motors and voltage options
- modification of impeller diameter according to specific requirements
- customisation of paint, labels and packaging

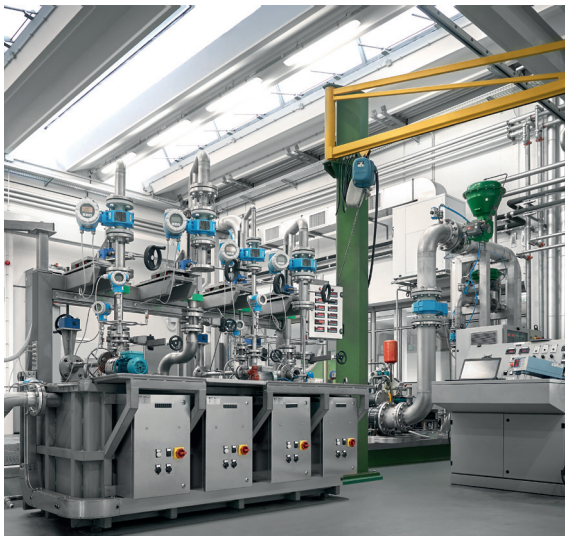

# state-of-the-art testing facility

- over 1,000 square meters of dedicated testing space
- equipped with advanced measurement and data acquisition systems
- designed to ensure precision, reliability, and performance verification across all product ranges

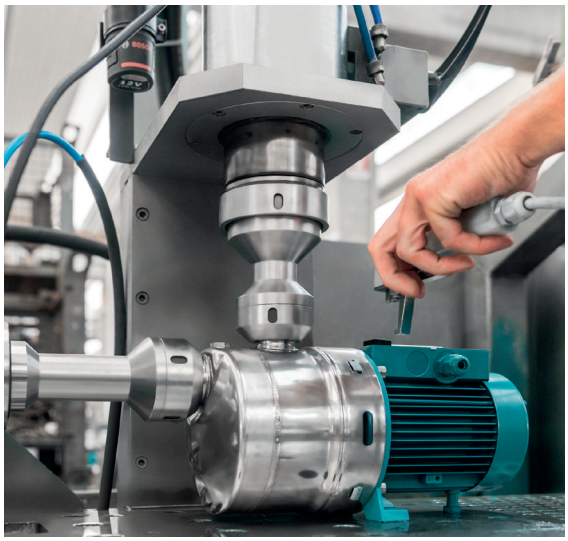

# end-of-line testing

- 100% of products are tested at various stages of the production process to ensures consistent performance, quality, and compliance with specifications

# comprehensive assistance

- thousands of service centres worldwide
- spare parts always available

calpeda®

ed. 07/2025

# in figures

**1959** year the company was founded

**15milioni** pumps produced

**150** countries around the world where we are present

**5.000** international partners and distributors

**16** subsidiaries

- CALPEDA POMPES S.A.
- CALPEDA PUMPS (IRELAND) LTD.
- CALPEDA KOREA CO, LTD
- CALPEDA PUMPS INDIA PVT LTD
- CALPEDA IBÉRICA S.A.
- CALPEDA PUMPS SOUTHERN AFRICA
- CALPEDA TAIWAN CO LTD
- CAPRARI HELLAS S.A
- CALPEDA PUMPEN VERTRIEB GMBH
- CALPEDA ASIA PACIFIC PTE LTD
- CALPEDA (MALAYSIA) SDN BHD
- CAPRARI TUNISIE S.A.
- CALPEDA LIMITED
- CALPEDA CHINA BEIJING PUMP CO. LTD.
- CALPEDA PUMPS PTY LTD
- CAPRARI PORTUGAL LDA

**2** production plants

- MONTORSO VICENTINO ITALIA
- S.VITO AL TAGLIAMENTO ITALIA

**3** ESG goals we have

- 2 ZERO HUNGER
- 6 CLEAN WATER AND SANITATION
- 9 INDUSTRY, INNOVATION AND INFRASTRUCTURE

calpeda®

# certified quality

At Calpeda, our quality policy is focused on meeting and exceeding customer expectations. We adhere to the highest standards throughout our production processes, to ensure exceptional product performance and reliable service. Our commitment also extends to sustainable production practices. We fully comply with the RoHS directive and REACH regulation, including rigorous control of PFAS content, demonstrating our dedication to environmental responsibility and maintaining customer trust.

## Product certifications

## System certifications

# INDEX


**MÈTA** **Page 4**
Variable speed pressure boosting system with integrated control

**NM, NMD** **Page 10**
Close coupled centrifugal pumps with threaded connections
Also Bronze version

**NM, NMS** **Page 26**
Close Coupled Centrifugal Pumps with flanged connections
Also Bronze version

**N** **Page 88**
End-suction centrifugal pumps EN 733
Also Bronze version

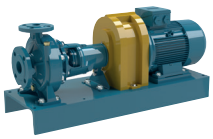

**NR, NRD** **Page 128**
In-line Pumps

**MXH** **Page 155**
Horizontal multi-stage stainless steel pumps AISI 304, AISI 316L

**E-MXP** **Page 169**
Pressurized system with integrated control

**MXP** **Page 174**
Horizontal multi-stage close coupled pumps

**MGP** **Page 177**
Horizontal multi-stage close coupled pumps

**MPSU** **Page 180**
Vertical multi-stage close coupled pumps

**MXV-B** **Page 185**
Vertical multi-stage close coupled stainless steel pumps

**MXV** **Page 195**
Vertical multi-stage stainless steel pumps AISI 304, AISI 316L

**I-MPC** **Page 221**
Variable speed Self-priming swimming pool pump with built-in strainer

**MPC** **Page 225**
Self-priming swimming pool pumps with built-in strainer

**NMP** **Page 231**
Self-priming centrifugal pumps with built-in strainer
Also Bronze version

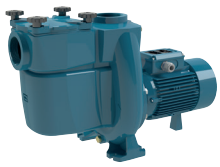

**PF** **Page 236**
Pre-filters

**A** **Page 238**
Self-priming centrifugal open impeller pumps
Also Bronze version

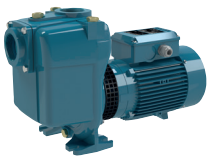

**C** **Page 245**
Centrifugal pumps with open impeller
Also Bronze version

**CT** **Page 252**
Peripheral pumps
Also Bronze version

**T, TP** **Page 255**
Peripheral pumps
Also Bronze version

# INDEX


**CA** **Page 263**
Self-priming liquid ring pumps
Also Bronze version

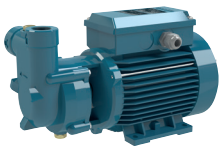

**NGL** **Page 268**
Self-priming jet pumps

**E-NGX** **Page 272**
Pressurisation system with Jet self-priming pumps with integrated control

**NGX** **Page 275**
Self-priming jet pumps

**NG** **Page 280**
Self-priming jet pumps
Also Bronze version

**MXA** **Page 289**
Horizontal multi-stage, self-priming, close coupled Pumps

**GM 5-9** **Page 293**
Submersible drainage pumps

**GM 10-8** **Page 295**
Submersible drainage pumps

**GXR, GXV** **Page 298**
Stainless steel submersible pumps

**GX ZERO** **Page 304**
Submersible clean water pumps

**GQR** **Page 307**
Submersible drainage pumps

**GX 40** **Page 312**
Stainless steel submersible sewage and drainage pumps

**GQV, GQS** **Page 317**
Submersible sewage and drainage pumps

**GQN** **Page 323**
Submersible sewage and drainage pumps

**GM 50** **Page 327**
Submersible sewage and drainage pumps

**GQG** **Page 333**
Submersible pumps with high power grinder

**GK** **Page 336**
Submersible sewage and drainage pumps

**GEO** **Page 403**
Automatic lifting stations
GEOTRIT - GEOCPMP - GEOCLEAN

**GEO** **Page 409**
Automatic waste water collecting and lifting station

**MP** **Page 437**
Multi-Stage Submersible Pumps

# INDEX


**E-MPS** **Page 441**
Multi-stage submersible clean water pumps with integrated control

**MPS** **Page 445**
Multi-stage submersible pumps for clean water

**MXS** **Page 450**
Multi-stage stainless steel submersible clean water pumps

**SDP** **Page 456**
Submersible borehole pumps for 4” and 6” wells

**SDX** **Page 473**
Stainless steel submersible borehole pumps for 4, 6” and 8” wells

**SDS** **Page 504**
Submersible borehole pumps for 6”,8”, 10”, 12”, 14” and 18” wells

**CS-R** **Page 571**
Submersible motors for 4”, 6”, 8”, 10 and 12” wells

**NCE** **Page 585**
Circulating pumps

**IDROMAT** **Page 615**
Electronic regulator for pumps

**EASYMAT** **Page 618**
Variable speed system driven by frequency converter

**I-MAT** **Page 622**
Variable speed system driven by frequency converter

**BS** **Page 626**
Booster sets

**EJ, DJ** **Page 706**
UNI-EN 12845 units for feeding fire-fighting systems

**QM, QT** **Page 711**
Control panels

**ACCESSORIES** **Page 741**
Accessories for pumps

**Technical appendix** **Page 746**

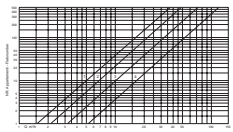

# MÈTA

calpeda®

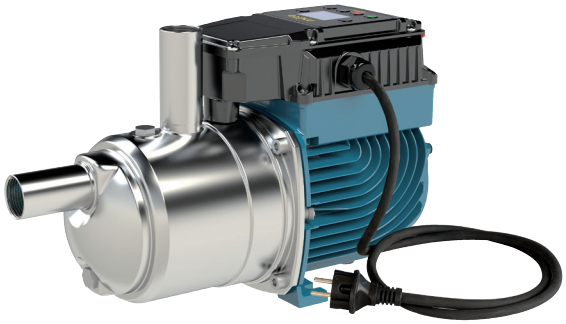

EASY TO INSTALL
Plug And play solution

ECONOMIC SAVING
High efficiency asynchronous motor
Up to 450Wh less energy consumption compared to a standard solution

EASY TO USE
Equipped with a programmable software and, thanks to the analogic pressure sensor, the product allows to set the restart pressure.

# Variable speed pressure boosting system with integrated control

## Construction

Self-priming booster set with built in frequency converter.
MÈTA (SMALL) is a plug and play solution, the pump is equipped with an integrated pressure transducer, an integrated check valve and a built-in pressure vessel.
The VSD controls the start and stop of the pump and allows to keep a constant pressure.

Boosting sets with 2 pumps include:
- Suction and delivery manifolds in stainless steel AISI 304.
- Connections for the installation of one G 1" connection pressure vessel

## Applications

For water supply systems.
For domestic use, for garden use and irrigation.

## Features

- integrated frequency converter
- built-in pressure vessel
- high efficiency asynchronous motor
- motor power control
- programmable re-start pressure
- no hydraulic losses due to the measuring devices
- voltage and current control
- monitoring of maximum starting current

## Protections

- dry-run protection
- detects the presence of air in the pump casing
- overload control and overheating motor control
- pump blockage
- power supply control
- starts per hour control
- detects small leakages in the system

## Operating conditions

Liquid temperature: 0 °C to +35 °C.
Ambient temperature up to 40° C.
Maximum permissible pressure in the pump casing: 8 bar.
Continuous duty.

## Motor

2-pole induction motor.
Nominal speed 4500 rpm (5800 rpm per MÈTA SMALL)
- Motor: variable speed
Frequency: 50-60 Hz
Single-phase 220-240V~50Hz/220V~60Hz, with thermal protector.
Cable: H07RN8-F, 3G1,5 mm2, length 1,5 m, with plug
CEI-UNEL 47166.
Insulation class F.
Protection IP X4.
Constructed in accordance with EN 60034-1, EN 60335-1, EN 60335-2-41.

## Materials

| Components | Material |
|---|---|
| Pump casing | Cr-Ni steel 1.4301 EN 10088 (AISI 304) |
| Casing cover | Cr-Ni steel 1.4301 EN 10088 (AISI 304) |
| Pump shaft | Cr-Ni steel 1.4305 EN 10088 (AISI 303) |
| Suction casing | PPO-GF20 (Noryl) |
| Stage casing | PPO-GF20 (Noryl) (Cr-Ni steel AISI 304 for MÈTA SMALL) |
| Impeller | Cr-Ni steel 1.4301 EN 10088 (AISI 304) |
| Tank membrane | Butyl |
| Tank cover | POM - POLYACETAL |
| Membrane cap | POM - POLYACETAL |
| Non-return valve | POM - POLYACETAL |
| Plug | Cr-Ni steel 1.4305 EN 10088 (AISI 303) |
| Mechanical seal | Carbon - Ceramic - NBR |

# MÈTA

## Performance

### Single-phase

| Model | 230V | P1 | Q = Flow | | | | | | | | | | | |
|---|---|---|---|---|---|---|---|---|---|---|---|---|---|---|
| | | | m³/h | 0 | 1 | 2 | 3 | 4 | 5 | 6 | 6,5 | 7 | 8 | 8,4 |
| | | | l/min | | 16,6 | 33,3 | 50 | 66,6 | 83,3 | 100 | 108 | 117 | 133 | 140 |
| | A | kW | H (m) = Total head | | | | | | | | | | | |
| MÈTA SMALL | 2,8 | 0,65 | | 55 | 50 | 37,3 | 28,5 | 20,5 | 11,3 | - | - | - | - | - |
| MÈTA | 5,9 | 1,35 | | 55 | - | 48 | 43,5 | 38,7 | 33,8 | 28,6 | 26 | 23,4 | 18,2 | 15 |

**P1:** Maximum power input.
**H:** Total head in m

**Test results with clean cold water, without gas content.**
A safety margin of + 0.5 m is recommended for the NPSH value.
Tolerances according to UNI EN ISO 9906:2012

## Characteristic curves

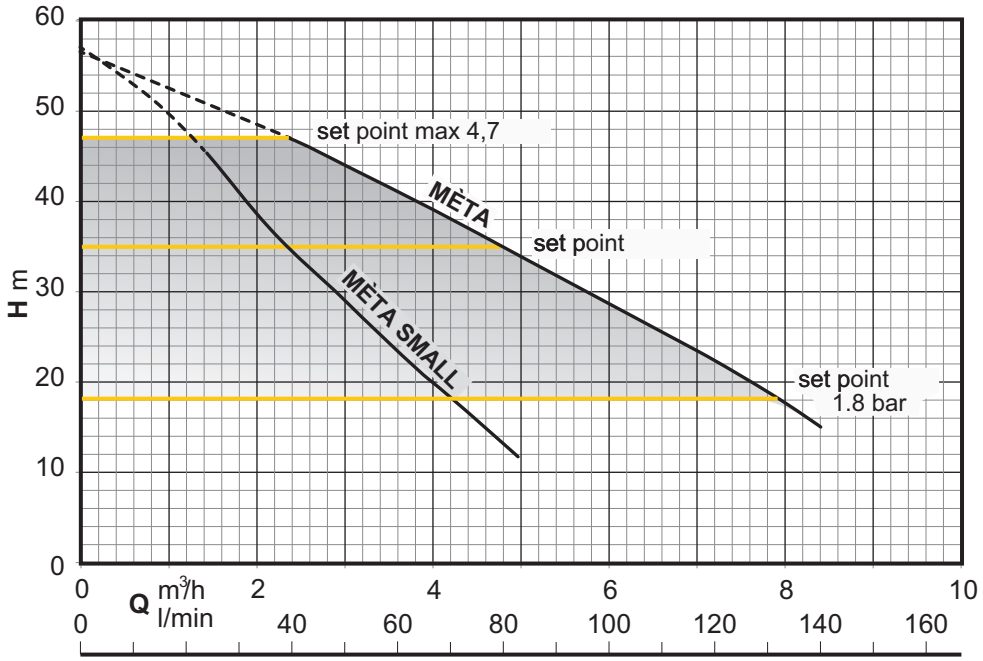


* Factory settings

## Dimensions and weights

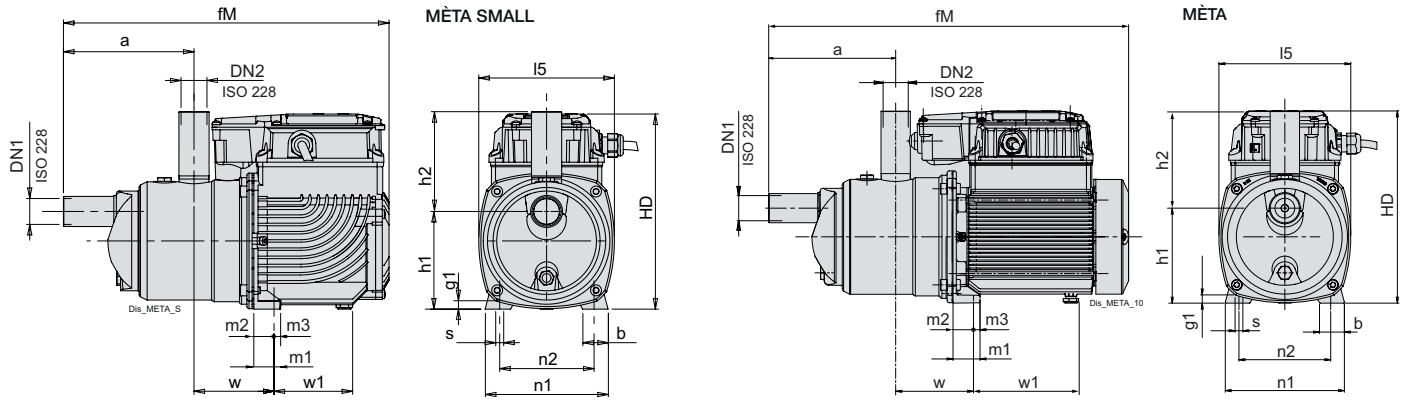


| TYPE | | | mm | | | | | | | | | | | | | | | | kg |
|---|---|---|---|---|---|---|---|---|---|---|---|---|---|---|---|---|---|---|---|
| | DN1 | DN2 | a | b | fM | g1 | h1 | h2 | HD | l5 | m1 | m2 | m3 | n1 | n2 | s | w | w1 | Weight |
| MÈTA SMALL | G 1 | G 1 | 155 | 30 | 387 | 10 | 116 | 119 | 235 | 161 | 33 | 25 | 8 | 146 | 112.5 | 9 | 95 | 93 | 9.8 |
| MÈTA | G 1 | G 1 | 155 | 30 | 440 | 10 | 116 | 119 | 235 | 161 | 33 | 25 | 8 | 146 | 112.5 | 9 | 95 | 119 | 12.7 |

Weight with cable length: 1,5 m

## Performance

### Single-phase

| | | | Q = Flow | | | | | | | | | | | |
|---|---|---|---|---|---|---|---|---|---|---|---|---|---|---|
| | | | m³/h | 0 | 2 | 4 | 6 | 8 | 10 | 12 | 13 | 14 | 16 | 16,8 |
| Model | 230V | P1 | l/min | | 33,3 | 66,6 | 100 | 133 | 167 | 200 | 217 | 233 | 267 | 280 |
| | A | kW | H (m) = Total head | | | | | | | | | | | |
| BSM2V 2 MÈTA SMALL | 2 X 2,8 | 2 X 0.65 | | 0 | 50 | 37,3 | 28,5 | 20,5 | 11,3 | - | - | - | - | - |
| BSM2V 2 MÈTA | 2 X 5,9 | 2 X 1.35 | | 55 | - | 48 | 43,5 | 38,7 | 33,8 | 28,6 | 26 | 23,4 | 18,2 | 15 |

**P1:** Maximum power input.
**H:** Total head in m

**Test results with clean cold water, without gas content.**
Tolerances according to UNI EN ISO 9906:2012

## Dimensions and weights

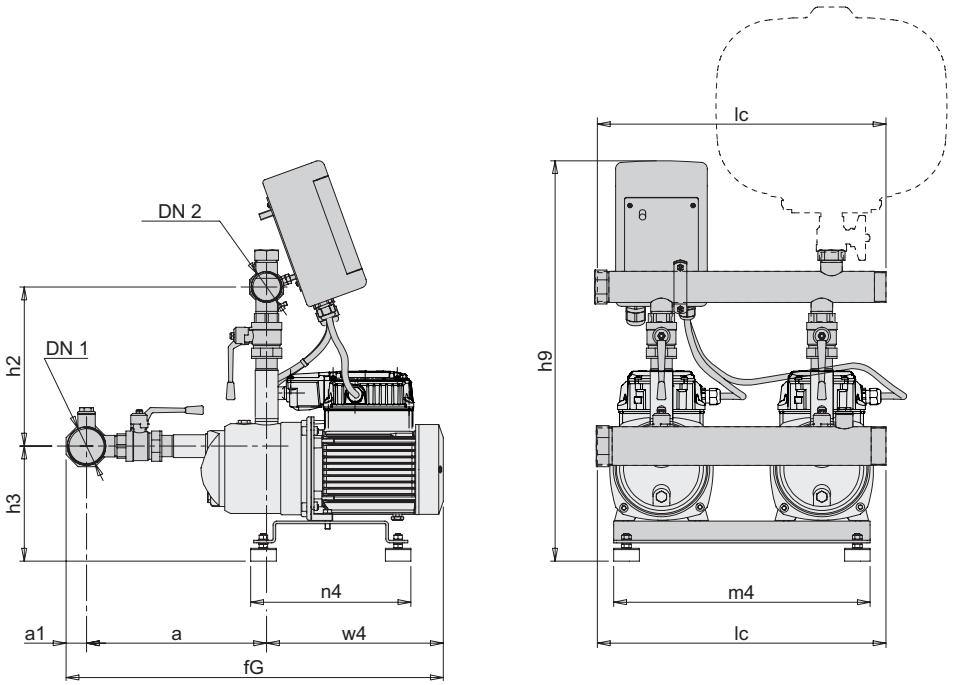


| TYPE | | | mm | | | | | | | | | | kg |
|---|---|---|---|---|---|---|---|---|---|---|---|---|---|
| | DN1 | DN2 | a | a1 | fG | h2 | h3 | h9 | lc | m4 | n4 | w4 | Weight |
| **BSM2V 2 MÈTA SMALL** | G 2 | G 1 1/2 | 291 | 32 | 555 | 248 | 179 | 625 | 450 | 400 | 250 | 285 | 31.7 |
| **BSM2V 2 MÈTA** | G 2 | G 1 1/2 | 291 | 32 | 608 | 248 | 179 | 625 | 450 | 400 | 250 | 285 | 37.2 |

## Characteristic curves

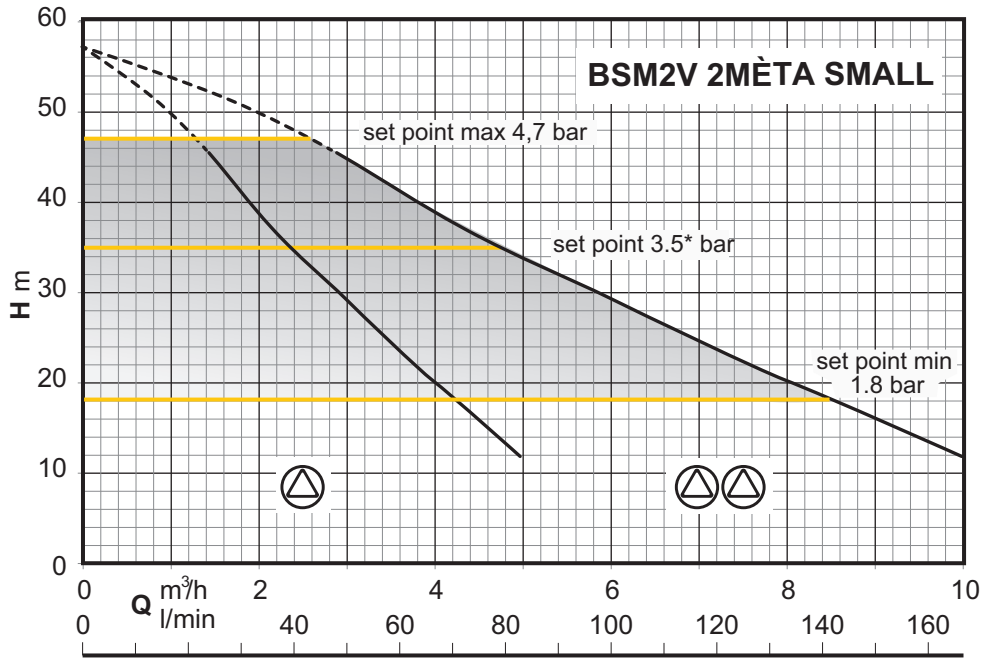


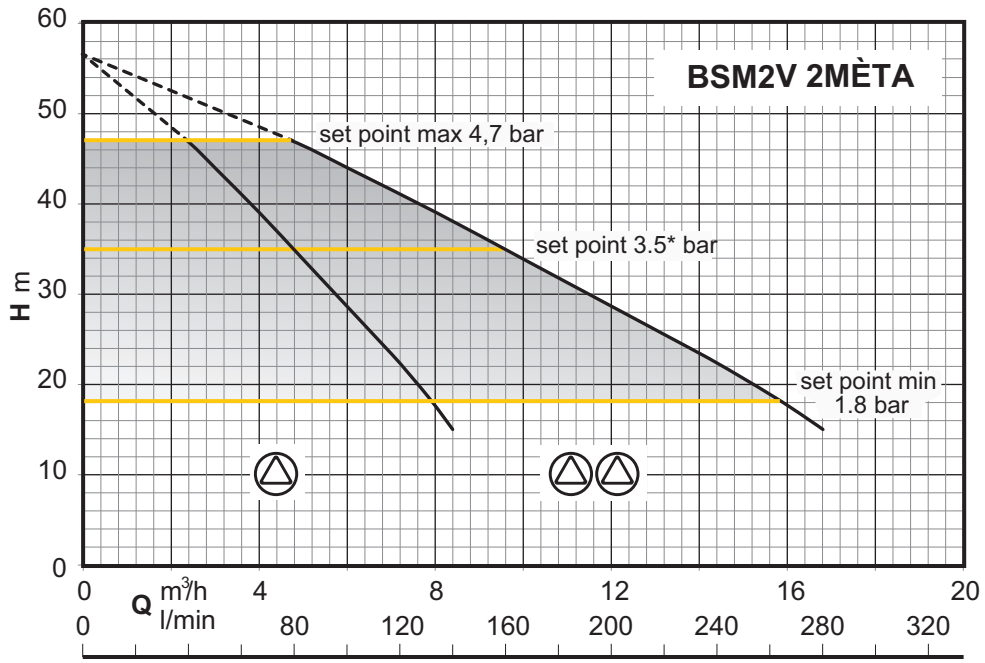


* Factory settings

**Control Panel**

They allow to visualize:
- Initial screen (rUn, OFF, StB, Err)
- Motor Operating Frequency
- Delivery pressure measured by the transducer
- Supply current input
- Supply electrical power input
- Supply voltage

mèta small

new design without cooling fan

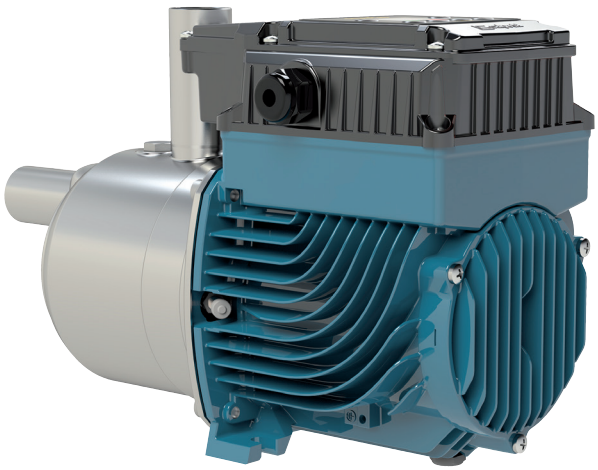

think outside the box

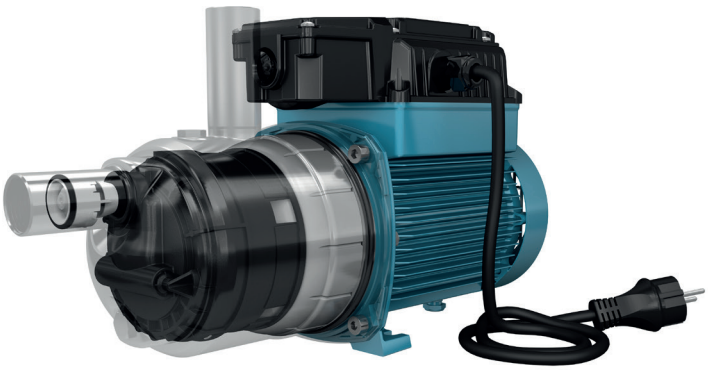

# NMX

**Coverage chart n ≈ 2900 rpm**

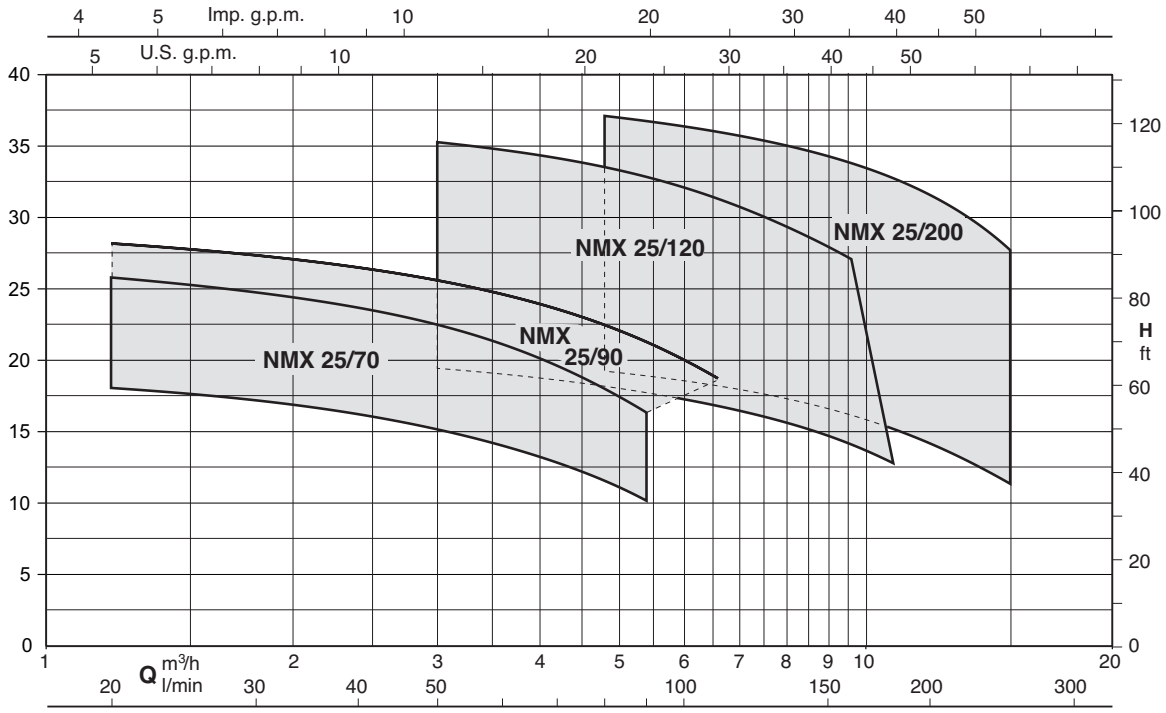


# Close coupled centrifugal pumps with threaded connections stainless steel

# NMX

## Construction

Close-coupled, centrifugal pumps; electric motor with extended shaft directly connected to the pump.

**Connections:** threaded ports ISO 228/1 (BS 2779).

**NMX:** Version in AISI 304.
**NMXL:** Version in AISI 316.

## Applications

For water supply.
For clean liquids, without abrasives, which are non-aggressive for stainless steel (with suitable seal materials, on request).
Universal pump, for domestic use, for civil and industrial applications, for garden use and irrigation.

## Operating conditions

Liquid temperature from -10 °C to +90 °C.
Ambient temperature up to 40° C.
Maximum permissible working pressure up to 10 bar.
Continuous duty (S3 60% for single-phase pump to 1,5-1,8 kW).

## Motor

2-pole induction motor, 50 Hz (n ≈ 2900 rpm).
**NMX:** three-phase 230/400 V ± 10%.
**NMXM:** single-phase 230 V ± 10%, with thermal protector.

Insulation class F.
Protection IP54
Motor suitable for operation with frequency converter from 1,1 kW.
**IE2 efficiency class for single-phase motors up to 1,1 kW.**
**IE3 efficiency class for three-phase motors (IE2 up to 0,65 kW).**
- Constructed in accordance with EN 60034-1, EN 60034-30-1, EN 60335-1, EN 60335-2-41.

## Special features on request

Other voltages.
Frequency 60 Hz (as per 60 Hz data sheet).
IP protection: IP55
Special mechanical seal
Higher or lower liquid or ambient temperatures.
Motor suitable for operation with frequency converter up to 0,75 kW.

## Designation

Example: NMX(L)M 25/70B/B
NMX = Series
L = Version in AISI 316.
M = Single-phase version (no indication: three-phase)
25 = Delivery port diameter in mm
70 = Hydraulic code
B = Impeller size
/B = It refers to a revision

## Materials

| Components | NMX | NMXL |
|---|---|---|
| Pump casing | Chrome-nickel steel 1.4301 EN 10088 (AISI 304) | Stainless Steel 1.4401 EN 10088 (AISI 316) |
| Casing cover | Chrome-nickel steel 1.4301 EN 10088 (AISI 304) | Stainless Steel 1.4401 EN 10088 (AISI 316) |
| Impeller | Chrome-nickel steel 1.4301 EN 10088 (AISI 304) | Stainless Steel 1.4401 EN 10088 (AISI 316) |
| Shaft | Chrome-nickel steel 1.4301 EN 10088 (AISI 304) | Stainless Steel 1.4401 EN 10088 (AISI 316) |
| Wear ring | EPDM | EPDM |
| Mechanical seal | Ceramic alumina/Carbon/EPDM | Ceramic alumina/Carbon/EPDM |

# NMX

## Coverage chart n ≈ 2900 rpm

### Three-phase

| | | | | | | Q = Flow | | | | | | | | | | | | | | | | | | | |
|---|---|---|---|---|---|---|---|---|---|---|---|---|---|---|---|---|---|---|---|---|---|---|---|---|---|
| | | | | | | m³/h | 0 | 1,2 | 1,5 | 1,89 | 2,4 | 3 | 3,6 | 4,2 | 4,8 | 5,4 | 6 | 6,6 | 7,5 | 8,4 | 9,6 | 10,8 | 12 | 13,2 | 15 |
| Model | | 230V | 400V | P2 | | l/min | | 20 | 25 | 31,5 | 40 | 50 | 60 | 70 | 80 | 90 | 100 | 110 | 125 | 140 | 160 | 180 | 200 | 220 | 250 |
| | | A | | kW | HP | H (m) = Total head | | | | | | | | | | | | | | | | | | | |
| NMXL | NMX 25/70B | 3 | 1,7 | 0,55 | 0,75 | | 19,8 | 18,1 | 17,6 | 17,1 | 16,2 | 15,2 | 14 | 12,8 | 11,6 | 10,2 | - | - | - | - | - | - | - | - | - |
| NMXL | NMX 25/70A | 3,8 | 2,2 | 0,75 | 1 | | 28,2 | 25,8 | 25,3 | 24,6 | 23,7 | 22,5 | 21,1 | 19,6 | 18 | 16,3 | - | - | - | - | - | - | - | - | - |
| NMXL | NMX 25/90A | 4,5 | 2,6 | 1,1 | 1,5 | | 30 | 28,2 | 27,8 | 27,2 | 26,5 | 25,6 | 24,6 | 23,6 | 22,5 | 21,3 | 20 | 18,7 | - | - | - | - | - | - | - |
| NMXL | NMX 25/120C | 3,8 | 2,2 | 0,75 | 1 | | 21,6 | - | - | - | - | 19,4 | 19 | 18,6 | 18,2 | 17,7 | 17,3 | 16,8 | 16,1 | 15,3 | 14,1 | 12,8 | - | - | - |
| NMXL | NMX 25/120B | 4,5 | 2,6 | 1,1 | 1,5 | | 30,9 | - | - | - | - | 27,8 | 27,2 | 26,6 | 26 | 25,4 | 24,7 | 24 | 22,9 | 21,7 | 19,7 | - | - | - | - |
| NMXL | NMX 25/120A | 7,5 | 4,3 | 1,5 | 2 | | 38,4 | - | - | - | - | 35,3 | 34,7 | 34,2 | 33,5 | 32,8 | 32,1 | 31,3 | 30,1 | 28,8 | 27,1 | - | - | - | - |
| NMXL | NMX 25/200C | 4,5 | 2,6 | 1,1 | 1,5 | | 22,1 | - | - | - | - | - | - | - | 19,2 | 18,9 | 18,6 | 18,2 | 17,6 | 17 | 16,2 | 15,2 | 14,2 | 13,1 | 11,4 |
| NMXL | NMX 25/200B | 7,5 | 4,3 | 1,5 | 2 | | 31,4 | - | - | - | - | - | - | - | 28,9 | 28,6 | 28,2 | 27,9 | 27,3 | 26,7 | 25,8 | 24,8 | 23,8 | 22,6 | 20,8 |
| NMXL | NMX 25/200A | 9,2 | 5,3 | 2,2 | 3 | | 39,9 | - | - | - | - | - | - | - | 37,1 | 36,8 | 36,4 | 36 | 35,4 | 34,7 | 33,8 | 32,7 | 31,6 | 30,2 | 27,7 |

### Single-phase

| | | | | | | Q = Flow | | | | | | | | | | | | | | | | | | | |
|---|---|---|---|---|---|---|---|---|---|---|---|---|---|---|---|---|---|---|---|---|---|---|---|---|---|
| | | | | | | m³/h | 0 | 1,2 | 1,5 | 1,89 | 2,4 | 3 | 3,6 | 4,2 | 4,8 | 5,4 | 6 | 6,6 | 7,5 | 8,4 | 9,6 | 10,8 | 12 | 13,2 | 15 |
| Model | | 230V | P2 | | P1 | l/min | | 20 | 25 | 31,5 | 40 | 50 | 60 | 70 | 80 | 90 | 100 | 110 | 125 | 140 | 160 | 180 | 200 | 220 | 250 |
| | | A | kW | HP | kW | H (m) = Total head | | | | | | | | | | | | | | | | | | | |
| NMXLM | NMXM 25/70B | 4,5 | 0,55 | 0,75 | 1 | | 19,8 | 18,1 | 17,6 | 17,1 | 16,2 | 15,2 | 14 | 12,8 | 11,6 | 10,2 | - | - | - | - | - | - | - | - | - |
| NMXLM | NMXM 25/70A | 5,7 | 0,75 | 1 | 1,2 | | 28,2 | 25,8 | 25,3 | 24,6 | 23,7 | 22,5 | 21,1 | 19,6 | 18 | 16,3 | - | - | - | - | - | - | - | - | - |
| NMXLM | NMXM 25/90A | 7 | 1,1 | 1,5 | 1,5 | | 30 | 28,2 | 27,8 | 27,2 | 26,5 | 25,6 | 24,6 | 23,6 | 22,5 | 21,3 | 20 | 18,7 | - | - | - | - | - | - | - |
| NMXLM | NMXM 25/120C | 5,7 | 0,75 | 1 | 1,2 | | 21,6 | - | - | - | - | 19,4 | 19 | 18,6 | 18,2 | 17,7 | 17,3 | 16,8 | 16,1 | 15,3 | 14,1 | 12,8 | - | - | - |
| NMXLM | NMXM 25/120B | 7 | 1,1 | 1,5 | 1,5 | | 30,9 | - | - | - | - | 27,8 | 27,2 | 26,6 | 26 | 25,4 | 24,7 | 24 | 22,9 | 21,7 | 19,7 | - | - | - | - |
| NMXLM | NMXM 25/120A | 9,2 | 1,5 | 2 | 2 | | 38,4 | - | - | - | - | 35,3 | 34,7 | 34,2 | 33,5 | 32,8 | 32,1 | 31,3 | 30,1 | 28,8 | 27,1 | - | - | - | - |
| NMXLM | NMXM 25/200C | 7 | 1,1 | 1,5 | 1,5 | | 22,1 | - | - | - | - | - | - | - | 19,2 | 18,9 | 18,6 | 18,2 | 17,6 | 17 | 16,2 | 15,2 | 14,2 | 13,1 | 11,4 |
| NMXLM | NMXM 25/200B | 9,2 | 1,5 | 2 | 2 | | 31,4 | - | - | - | - | - | - | - | 28,9 | 28,6 | 28,2 | 27,9 | 27,3 | 26,7 | 25,8 | 24,8 | 23,8 | 22,6 | 20,8 |

**P1:** Maximum power input.
**P2:** Rated motor power output.
**H:** Total head in m

# NMX

## Characteristic curves n ≈ 2900 rpm

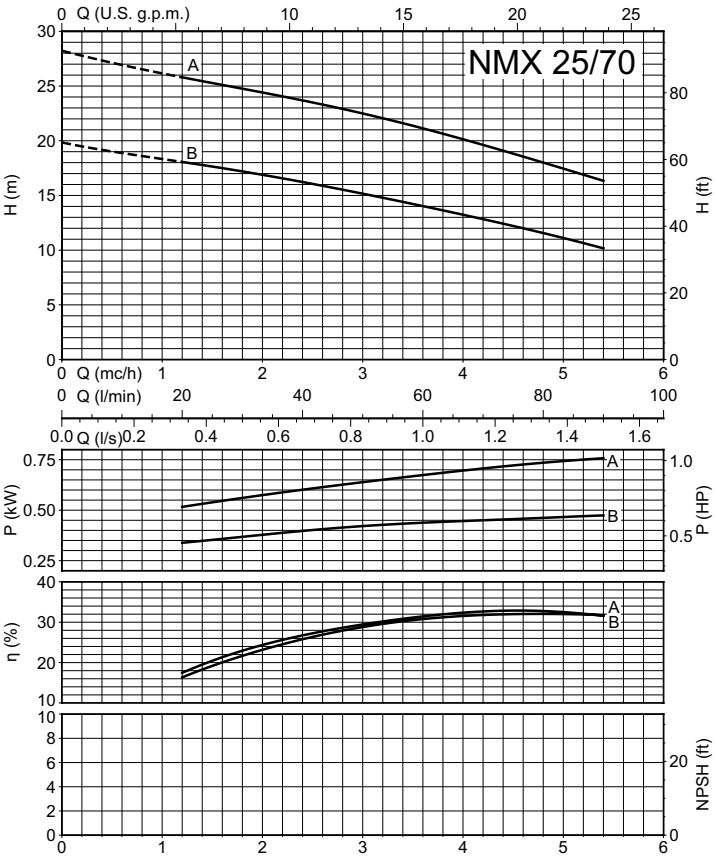


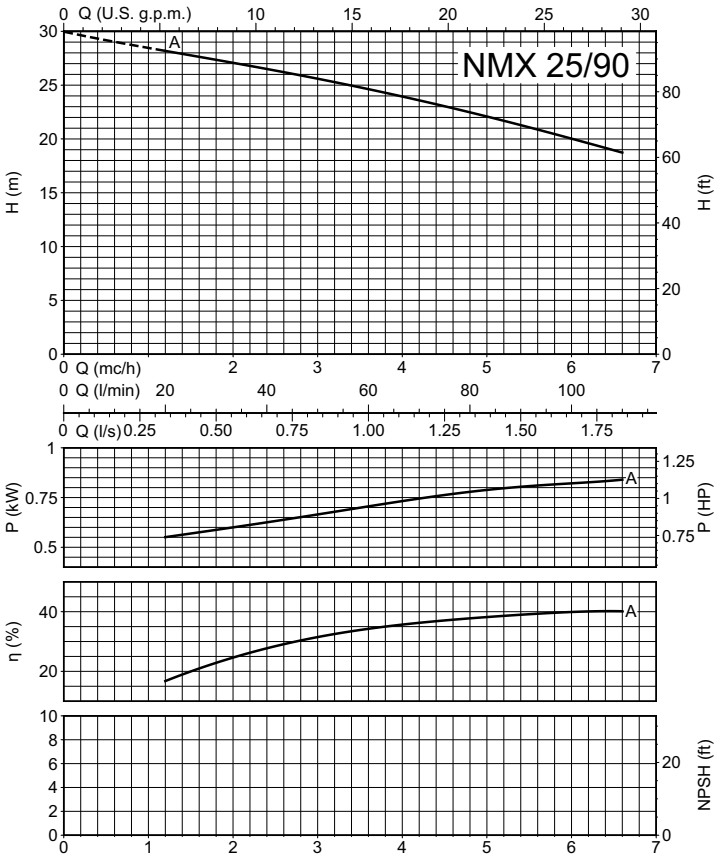


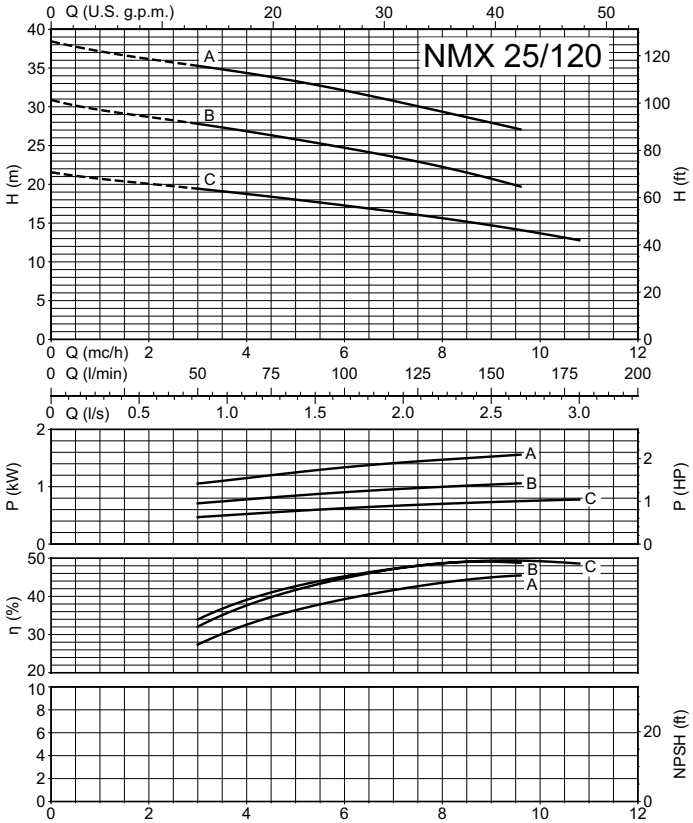


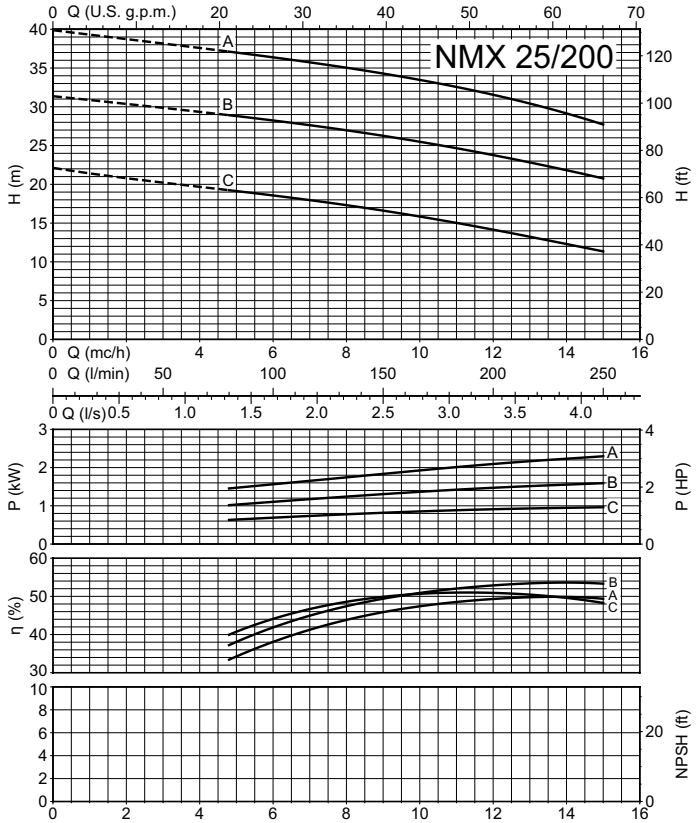

# NMX

## Dimensions and weight

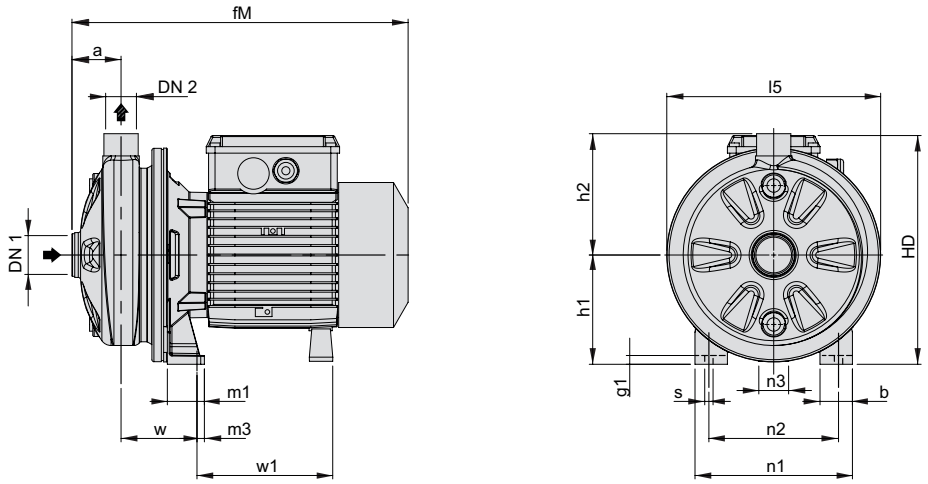


## Three-phase

| TYPE | ISO 228 | | mm | | | | | | | | | | | | | | | | kg |
|---|---|---|---|---|---|---|---|---|---|---|---|---|---|---|---|---|---|---|---|
| | DN1 | DN2 | a | b | fM | g1 | h1 | h2 | HD | l5 | m1 | m3 | n1 | n2 | n3 | s | w | w1 | Weight |
| **NMX 25/70B** | G 1 1/4 | G 1 | 53 | 35 | 329.5 | 10 | 106 | 123 | 217 | 208 | 40 | 8 | 170 | 140 | 20 | 9 | 80 | 135 | 9.7 |
| **NMX 25/70A** | G 1 1/4 | G 1 | 53 | 35 | 329.5 | 10 | 106 | 123 | 217 | 208 | 40 | 8 | 170 | 140 | 20 | 9 | 80 | 135 | 11.6 |
| **NMX 25/90A** | G 1 1/4 | G 1 | 53 | 35 | 329.5 | 10 | 106 | 123 | 217 | 208 | 40 | 8 | 170 | 140 | 20 | 9 | 80 | 135 | 14 |
| **NMX 25/120C** | G 1 1/4 | G 1 | 53 | 35 | 329.5 | 10 | 106 | 123 | 217 | 208 | 40 | 8 | 170 | 140 | 20 | 9 | 80 | 135 | 11.7 |
| **NMX 25/120B** | G 1 1/4 | G 1 | 53 | 35 | 329.5 | 10 | 106 | 123 | 217 | 208 | 40 | 8 | 170 | 140 | 20 | 9 | 80 | 135 | 13.6 |
| **NMX 25/120A** | G 1 1/4 | G 1 | 53 | 35 | 363 | 10 | 118 | 131 | 247 | 232 | 40 | 8 | 170 | 140 | 33 | 9 | 82 | 147 | 16.9 |
| **NMX 25/200C** | G 1 1/2 | G 1 | 53 | 35 | 329.5 | 10 | 106 | 123 | 217 | 208 | 40 | 8 | 170 | 140 | 20 | 9 | 80 | 135 | - |
| **NMX 25/200B** | G 1 1/2 | G 1 | 53 | 35 | 363 | 10 | 106 | 123 | 235 | 208 | 40 | 8 | 170 | 140 | 35 | 9 | 82 | 147 | 16.6 |
| **NMX 25/200A** | G 1 1/2 | G 1 | 53 | 35 | 403 | 10 | 118 | 131 | 247 | 232 | 40 | 8 | 170 | 140 | 35 | 9 | 82 | 187 | - |
| **NMXL 25/70B** | G 1 1/4 | G 1 | 53 | 35 | 329.5 | 10 | 106 | 123 | 217 | 208 | 40 | 8 | 170 | 140 | 20 | 9 | 80 | 135 | - |
| **NMXL 25/70A** | G 1 1/4 | G 1 | 53 | 35 | 329.5 | 10 | 106 | 123 | 217 | 208 | 40 | 8 | 170 | 140 | 20 | 9 | 80 | 135 | - |
| **NMXL 25/90A** | G 1 1/4 | G 1 | 53 | 35 | 329.5 | 10 | 106 | 123 | 217 | 208 | 40 | 8 | 170 | 140 | 20 | 9 | 80 | 135 | - |
| **NMXL 25/120C** | G 1 1/4 | G 1 | 53 | 35 | 329.5 | 10 | 106 | 123 | 217 | 208 | 40 | 8 | 170 | 140 | 20 | 9 | 80 | 135 | - |
| **NMXL 25/120B** | G 1 1/4 | G 1 | 53 | 35 | 329.5 | 10 | 106 | 123 | 217 | 208 | 40 | 8 | 170 | 140 | 20 | 9 | 80 | 135 | - |
| **NMXL 25/120A** | G 1 1/4 | G 1 | 53 | 35 | 363 | 10 | 118 | 131 | 247 | 232 | 40 | 8 | 170 | 140 | 33 | 9 | 82 | 147 | - |
| **NMXL 25/200C** | G 1 1/2 | G 1 | 53 | 35 | 329.5 | 10 | 106 | 123 | 217 | 208 | 40 | 8 | 170 | 140 | 20 | 9 | 80 | 135 | - |
| **NMXL 25/200B** | G 1 1/2 | G 1 | 53 | 35 | 363 | 10 | 106 | 123 | 235 | 208 | 40 | 8 | 170 | 140 | 35 | 9 | 82 | 147 | - |
| **NMXL 25/200A** | G 1 1/2 | G 1 | 53 | 35 | 403 | 10 | 118 | 131 | 247 | 232 | 40 | 8 | 170 | 140 | 35 | 9 | 82 | 187 | - |

# NMX

## Dimensions and weight

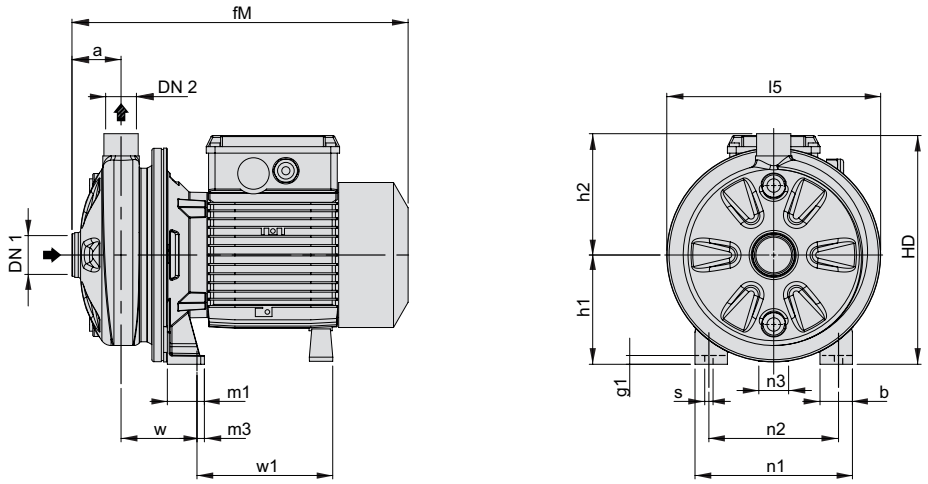


| TYPE | ISO 228 | | mm | | | | | | | | | | | | | | | | kg |
|---|---|---|---|---|---|---|---|---|---|---|---|---|---|---|---|---|---|---|---|
| | DN1 | DN2 | a | b | fM | g1 | h1 | h2 | HD | l5 | m1 | m3 | n1 | n2 | n3 | s | w | w1 | Weight |
| **NMXM 25/70B** | G 1 1/4 | G 1 | 53 | 35 | 329.5 | 10 | 106 | 123 | 217 | 208 | 40 | 8 | 170 | 140 | 20 | 9 | 80 | 135 | 10.7 |
| **NMXM 25/70A** | G 1 1/4 | G 1 | 53 | 35 | 329.5 | 10 | 106 | 123 | 217 | 208 | 40 | 8 | 170 | 140 | 20 | 9 | 80 | 135 | 12 |
| **NMXM 25/90A** | G 1 1/4 | G 1 | 53 | 35 | 329.5 | 10 | 106 | 123 | 217 | 208 | 40 | 8 | 170 | 140 | 20 | 9 | 80 | 135 | 13.6 |
| **NMXM 25/120C** | G 1 1/4 | G 1 | 53 | 35 | 329.5 | 10 | 106 | 123 | 217 | 208 | 40 | 8 | 170 | 140 | 20 | 9 | 80 | 135 | 11.9 |
| **NMXM 25/120B** | G 1 1/4 | G 1 | 53 | 35 | 329.5 | 10 | 106 | 123 | 217 | 208 | 40 | 8 | 170 | 140 | 20 | 9 | 80 | 135 | 13.6 |
| **NMXM 25/120A** | G 1 1/4 | G 1 | 53 | 35 | 363 | 10 | 118 | 131 | 247 | 232 | 40 | 8 | 170 | 140 | 33 | 9 | 82 | 147 | - |
| **NMXM 25/200C** | G 1 1/2 | G 1 | 53 | 35 | 329.5 | 10 | 106 | 123 | 217 | 208 | 40 | 8 | 170 | 140 | 20 | 9 | 80 | 135 | - |
| **NMXM 25/200B** | G 1 1/2 | G 1 | 53 | 35 | 363 | 10 | 106 | 123 | 235 | 208 | 40 | 8 | 170 | 140 | 35 | 9 | 82 | 147 | - |
| **NMXLM 25/70B** | G 1 1/4 | G 1 | 53 | 35 | 329.5 | 10 | 106 | 123 | 217 | 208 | 40 | 8 | 170 | 140 | 20 | 9 | 80 | 135 | - |
| **NMXLM 25/70A** | G 1 1/4 | G 1 | 53 | 35 | 329.5 | 10 | 106 | 123 | 217 | 208 | 40 | 8 | 170 | 140 | 20 | 9 | 80 | 135 | - |
| **NMXLM 25/90A** | G 1 1/4 | G 1 | 53 | 35 | 329.5 | 10 | 106 | 123 | 217 | 208 | 40 | 8 | 170 | 140 | 20 | 9 | 80 | 135 | - |
| **NMXLM 25/120C** | G 1 1/4 | G 1 | 53 | 35 | 329.5 | 10 | 106 | 123 | 217 | 208 | 40 | 8 | 170 | 140 | 20 | 9 | 80 | 135 | - |
| **NMXLM 25/120B** | G 1 1/4 | G 1 | 53 | 35 | 329.5 | 10 | 106 | 123 | 217 | 208 | 40 | 8 | 170 | 140 | 20 | 9 | 80 | 135 | - |
| **NMXLM 25/120A** | G 1 1/4 | G 1 | 53 | 35 | 363 | 10 | 118 | 131 | 247 | 232 | 40 | 8 | 170 | 140 | 33 | 9 | 82 | 147 | - |
| **NMXLM 25/200C** | G 1 1/2 | G 1 | 53 | 35 | 329.5 | 10 | 106 | 123 | 217 | 208 | 40 | 8 | 170 | 140 | 20 | 9 | 80 | 135 | - |
| **NMXLM 25/200B** | G 1 1/2 | G 1 | 53 | 35 | 363 | 10 | 106 | 123 | 235 | 208 | 40 | 8 | 170 | 140 | 35 | 9 | 82 | 147 | - |

# NM, NMD

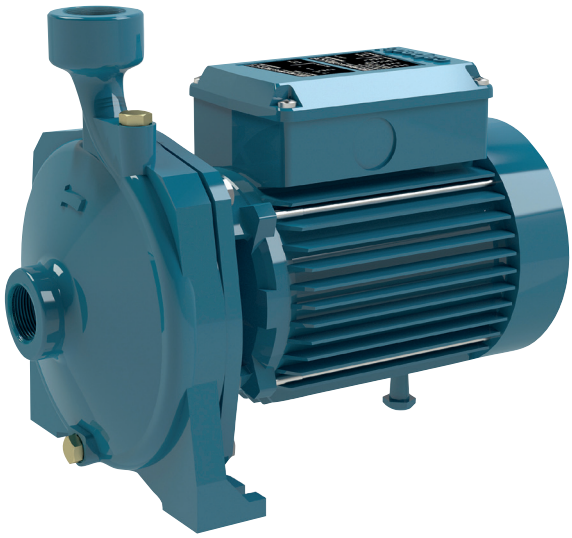

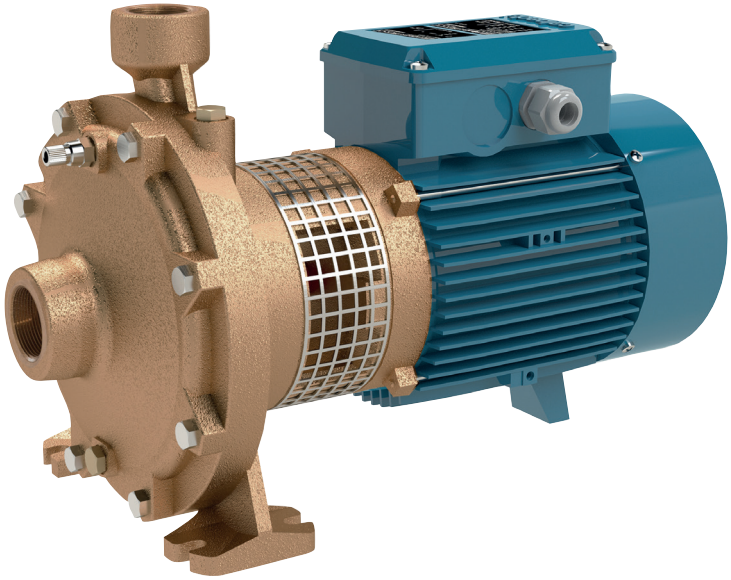

**Coverage chart n ≈ 2900 rpm**

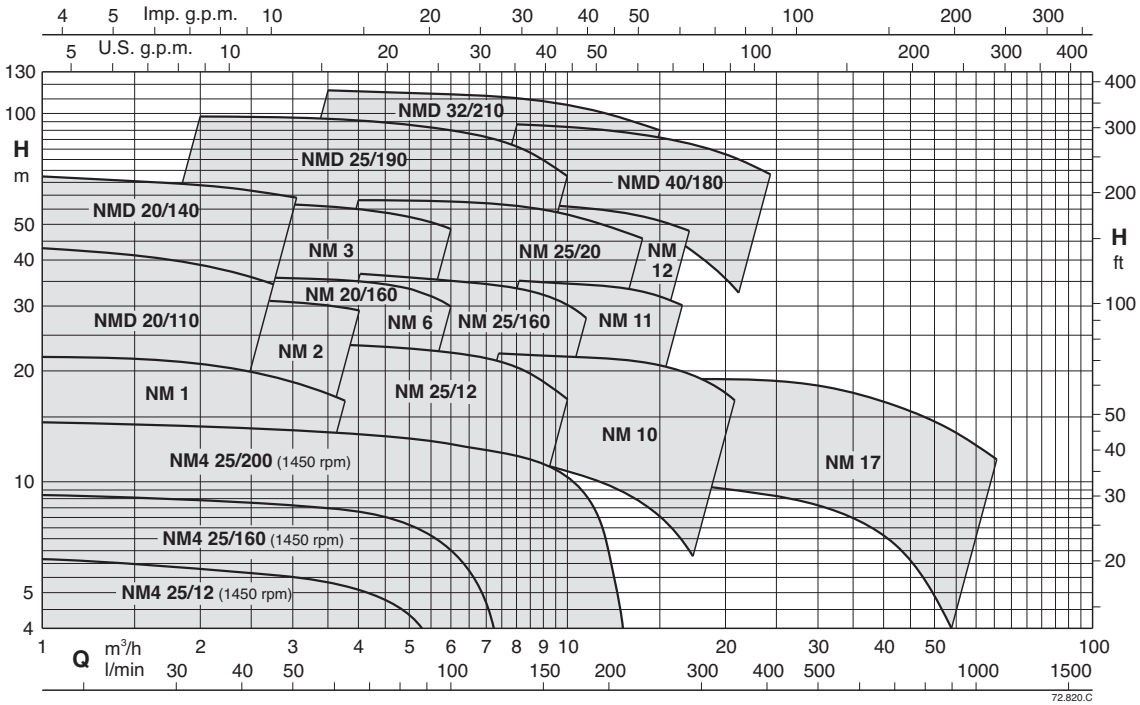


# Close coupled centrifugal pumps with screwed connections

# NM, NMD

## Construction

Close-coupled, centrifugal pumps; electric motor with extended shaft directly connected to the pump.
**NM, NM4:** single-impeller
**NMD:** with two back-to-back impellers (with axial thrust balancing).

Rated speed of rotation (50 Hz):
**NM, NMD** ≈ 2900 rpm.
**NM4** ≈ 1450 rpm.

**Connections:** threaded ports ISO 228/1 (BS 2779).
**NM, NMD:** version with pump casing and lantern bracket in cast iron.
**BNM, BNMD:** version with pump casing and lantern bracket in bronze.
The pumps are supplied fully painted.

## Applications

For clean liquids without abrasives, which are non-aggressive for the pump materials ( solids content up to 0.2%).
For water supply.
For heating, air-conditioning, cooling and circulation plants.
For civil and industrial applications.
For irrigation.

## Operating conditions

Liquid temperature from -10 °C to +90 °C.
Ambient temperature up to 40° C.
Total suction lift up to 7 m.
Maximum permissible working pressure up to 10 bar (16 bar for pumps NMD 25/190; NMD 32/210; NMD 40/180).
Continuous duty (S3 60% for single-phase pump to 1,5-1,8 kW).

## Motor

2-pole induction motor, 50 Hz (n ≈ 2900 rpm).
**NM, NMD:** three-phase 230/400 V ± 10% up to 3 kW;
400/690 V ± 10% from 4 to 9,2 kW;
**NMM, NMDM:** single-phase 230 V ± 10%, with thermal protector.

4-pole induction motor, 50 Hz (n ≈ 1450 rpm).
**NM4:** three-phase 230/400 V ± 10%.

Insulation class F.
Protection IP54
Motor suitable for operation with frequency converter from 0,37 kW for NM4 and from 1,1 kW for NM,NMD.
**IE2 efficiency class for single-phase motors up to 1,1 kW.**
**IE3 efficiency class for three-phase motors (IE2 up to 0,65 kW).**
Constructed in accordance with EN 60034-1, EN 60034-30-1,
EN 60335-1, EN 60335-2-41.

## Special features on request

Other voltages.
Impeller in chrome-nickel stainless steel AISI 316 for: NM 10.., NM 11.., NM 12...
Frequency 60 Hz (as per 60 Hz data sheet).
IP protection: IP55
Special mechanical seal
Higher or lower liquid or ambient temperatures.
Motor suitable for operation with frequency converter up to 0,33 kW for NM4 and up to 0,75 kW for NM,NMD.

## Designation

Example: BNMD(4)M 20/140A/B
B = Bronze version (no indication: the pump is in the Cast Iron version)
NM = Series
D = Double impeller
4 = 4-pole version (without indication, 2-pole version)
M = Single-phase version (no indication: three-phase)
20 = Delivery port diameter in mm
140 = Nominal impeller diameter
A = Impeller size
/B = It refers to a revision

**The electropumps NM, B-NM series comply with the European Regulation no. 547/2012.**

## Materials

| Components | NM, NMD, NM4 | BNM, BNMD, BNM4 |
|---|---|---|
| Pump casing | Cast iron GJL 200 EN 1561 | Bronze CC480K EN 1982 |
| Lantern bracket | Cast iron GJL 200 EN 1561 | Bronze CC480K EN 1982 |
| Impeller | Brass CW617N EN 12167 | Brass CW617N EN 12167 |
| Impeller NM17 | Cast iron GJL 200 EN 1561 | Bronze CC480K EN 1982 |
| Shaft | Chrome-nickel steel 1.4305 EN 10088 (AISI 303) | Stainless Steel 1.4401 EN 10088 (AISI 316) |
| | Steel 1.4104 EN 10088 AISI 430F (NM 1, 2, 6, 25/12, NMD 20/110) | Stainless Steel 1.4401 EN 10088 (AISI 316) |
| Shaft NM 6 | Stainless Steel 1.4104 EN 10088 (AISI 430F) | - |
| Mechanical seal | Carbon - Ceramic - NBR | Carbon - Ceramic - NBR |

# NM, NMD

calpeda

## Coverage chart n ≈ 2900 rpm

### Three-phase

| | | | | | Q = Flow | | | | | | | | | | | | | | | |
|---|---|---|---|---|---|---|---|---|---|---|---|---|---|---|---|---|---|---|---|---|
| | | | | | m³/h | 0 | 1 | 1,2 | 1,5 | 1,89 | 2,4 | 3 | 3,6 | 4,2 | 4,8 | 5,4 | 6 | 6,6 | 7,5 | 8,4 |
| Model | 230V | 400V | P2 | | l/min | | 16,6 | 20 | 25 | 31,5 | 40 | 50 | 60 | 70 | 80 | 90 | 100 | 110 | 125 | 140 |
| | A | | kW | HP | H (m) = Total head | | | | | | | | | | | | | | | |
| NM 1/A | 2,4 | 1,4 | 0,37 | 0,5 | | 22,7 | 22 | 21,6 | 21,3 | 20,9 | 20,3 | 19,4 | 18,1 | 16,3 | - | - | - | - | - | - |
| NM 2/B/A | 3 | 1,7 | 0,55 | 0,75 | | 26,5 | 27 | 26,5 | 26 | 25,5 | 25 | 24 | 23 | 22 | 20 | - | - | - | - | - |
| NM 2/S/A | 3 | 1,7 | 0,55 | 0,75 | | 33 | 31 | 30,5 | 30 | 29 | 27,5 | 25,5 | 23,5 | 20 | 16 | - | - | - | - | - |
| NM 2/A/B | 3,7 | 2,2 | 0,75 | 1 | | 33,8 | 33,5 | 33 | 32,5 | 32 | 31,5 | 30,5 | 29,5 | 28,5 | 27 | 26 | 24 | - | - | - |
| NM 3/C/A | 4,6 | 2,7 | 1,1 | 1,5 | | 38 | - | 37,5 | 37,5 | 37 | 36,5 | 36 | 35 | 34 | 32 | 30,5 | 28,5 | - | - | - |
| NM 3/B/A | 7,5 | 4,3 | 1,5 | 2 | | 48 | - | 47 | 47 | 46,5 | 46 | 45,5 | 45 | 44 | 43 | 41,5 | 40 | 37,5 | 33 | 26 |
| NM 3/A/B | 9,2 | 5,3 | 2,2 | 3 | | 56,8 | - | 56 | 55,5 | 55,5 | 55 | 54,5 | 53,5 | 52,5 | 51,5 | 50 | 48 | 46 | 42 | 36 |
| NM 6/B | 3,8 | 2,2 | 0,75 | 1 | | 31,8 | - | - | - | 30,5 | 30 | 29,5 | 28,5 | 27,5 | 26,5 | 25,5 | 24 | 22 | 18 | - |
| NM 6/A | 4,6 | 2,7 | 1,1 | 1,5 | | 36 | - | - | - | 35,5 | 35,2 | 34,7 | 34 | 33 | 32 | 30,5 | 29 | 27 | 23,5 | 19 |

### Single-phase

| | | | | | Q = Flow | | | | | | | | | | | | | | | |
|---|---|---|---|---|---|---|---|---|---|---|---|---|---|---|---|---|---|---|---|---|
| | | | | | m³/h | 0 | 1 | 1,2 | 1,5 | 1,89 | 2,4 | 3 | 3,6 | 4,2 | 4,8 | 5,4 | 6 | 6,6 | 7,5 | 8,4 |
| Model | 230V | P2 | | P1 | l/min | | 16,6 | 20 | 25 | 31,5 | 40 | 50 | 60 | 70 | 80 | 90 | 100 | 110 | 125 | 140 |
| | A | kW | HP | kW | H (m) = Total head | | | | | | | | | | | | | | | |
| NMM 1/A | 3 | 0,37 | 0,5 | 0,57 | | 22,7 | 22 | 21,6 | 21,3 | 20,9 | 20,3 | 19,4 | 18,1 | 16,3 | - | - | - | - | - | - |
| NMM 2/B/A | 4,5 | 0,55 | 0,75 | 0,78 | | 26,5 | 27 | 26,5 | 26 | 25,5 | 25 | 24 | 23 | 22 | 20 | - | - | - | - | - |
| NMM 2/S/A | 4,5 | 0,55 | 0,75 | 0,78 | | 33 | 31 | 30,5 | 30 | 29 | 27,5 | 25,5 | 23,5 | 20 | 16 | - | - | - | - | - |
| NMM 2/A/A | 5,7 | 0,75 | 1 | 1,01 | | 33,8 | 33,5 | 33 | 32,5 | 32 | 31,5 | 30,5 | 29,5 | 28,5 | 27 | 26 | 24 | - | - | - |
| NMM 3/C | 7,4 | 1,1 | 1,5 | 1,44 | | 38 | - | 37,5 | 37,5 | 37 | 36,5 | 36 | 35 | 34 | 32 | - | - | - | - | - |
| NMM 3/B | 9,2 | 1,5 | 2 | 2 | | 42,5 | - | 42 | 42 | 41,5 | 41 | 40,5 | 40 | 39 | 37 | 35 | 32 | - | - | - |
| NMM 3/A/A | 11,2 | 1,8 | 2,5 | 2,5 | | 48,8 | - | 47,5 | 47,5 | 47 | 46,5 | 46 | 45,5 | 44,5 | 43,5 | 42 | 40,5 | 38 | 33,5 | 26,5 |
| NMM 6/B | 5,7 | 0,75 | 1 | 1,01 | | 31,8 | - | - | - | 30,5 | 30 | 29,5 | 28,5 | 27,5 | 26,5 | 25,5 | 24 | 22 | 18 | - |
| NMM 6/A | 7 | 1,1 | 1,5 | 1,44 | | 36 | - | - | - | 35,5 | 35,2 | 34,7 | 34 | 33 | 32 | 30,5 | 29 | 27 | 23,5 | 19 |

### Three-phase

| | | | | | | Q = Flow | | | | | | | | | | | | |
|---|---|---|---|---|---|---|---|---|---|---|---|---|---|---|---|---|---|---|
| | | | | | m³/h | 0 | 1 | 1,2 | 1,5 | 1,89 | 2,4 | 3 | 3,6 | 4,2 | 4,8 | 5,4 | 6 | 6,6 |
| Model | | 230V | 400V | P2 | l/min | | 16,6 | 20 | 25 | 31,5 | 40 | 50 | 60 | 70 | 80 | 90 | 100 | 110 |
| | | A | | kW | HP | H (m) = Total head | | | | | | | | | | | | |
| BNMD | NMD 20/110B/A | 2,3 | 1,3 | 0,45 | 0,6 | | 35,5 | 33 | 32 | 31 | 29 | 26,5 | 23 | 18 | - | - | - | - | - |
| BNMD | NMD 20/110Z/A | 3 | 1,7 | 0,55 | 0,75 | | 39,5 | 37 | 36 | 35 | 33 | 30,5 | 27,5 | 23 | 18 | - | - | - | - |
| BNMD | NMD 20/110A/B | 3,7 | 2,2 | 0,75 | 1 | | 45,6 | 43 | 42 | 40,5 | 39 | 36,5 | 33 | 29 | 25 | - | - | - | - |
| BNMD | NMD 20/140B/A | 4,6 | 2,7 | 1,1 | 1,5 | | 54 | 53 | 52,5 | 52 | 51 | 50 | 48 | 46 | 43,5 | 40 | - | - | - |
| BNMD | NMD 20/140A/A | 7,5 | 4,3 | 1,5 | 2 | | 68 | 67 | 66,5 | 66 | 64,5 | 63 | 61,5 | 59 | 57 | 53,5 | 50 | 46 | - |
| BNM | NM 20/160BE | 4 | 2,3 | 0,75 | 1 | | 31,6 | - | - | - | 30,5 | 30 | 29,5 | 28,5 | 27,5 | 26,5 | 25,5 | 24 | 22 |
| BNM | NM 20/160A/A | 4,6 | 2,7 | 1,1 | 1,5 | | 37 | - | - | - | 36 | 35,5 | 35 | 34,5 | 33,5 | 32 | 30,5 | 29 | 27 |

### Single-phase

| | | | | | | Q = Flow | | | | | | | | | | | | |
|---|---|---|---|---|---|---|---|---|---|---|---|---|---|---|---|---|---|---|
| | | | | | m³/h | 0 | 1 | 1,2 | 1,5 | 1,89 | 2,4 | 3 | 3,6 | 4,2 | 4,8 | 5,4 | 6 | 6,6 |
| Model | | 230V | P2 | P1 | l/min | | 16,6 | 20 | 25 | 31,5 | 40 | 50 | 60 | 70 | 80 | 90 | 100 | 110 |
| | | A | kW | HP | kW | H (m) = Total head | | | | | | | | | | | | |
| BNMDM | NMDM 20/110B/A | 3,6 | 0,45 | 0,6 | 0,67 | | 35,5 | 33 | 32 | 31 | 29 | 26,5 | 23 | 18 | - | - | - | - | - |
| BNMDM | NMDM 20/110Z/A | 4,5 | 0,55 | 0,75 | 0,78 | | 39,5 | 37 | 36 | 35 | 33 | 30,5 | 27,5 | 23 | 18 | - | - | - | - |
| BNMDM | NMDM 20/110A/A | 5,7 | 0,75 | 1 | 1,01 | | 45,5 | 43 | 42 | 40,5 | 39 | 36,5 | 33 | 29 | 25 | - | - | - | - |
| BNMDM | NMDM 20/140BE | 7,4 | 1,1 | 1,5 | 1,44 | | 52,5 | 52 | 51,5 | 51 | 50 | 48,5 | 47 | 45 | - | - | - | - | - |
| BNMDM | NMDM 20/140AE | 9,2 | 1,5 | 2 | 2 | | 58 | 57,5 | 57 | 56,5 | 55,5 | 54 | 51,5 | 49 | 46 | 43 | 40 | 36 | - |
| BNMM | NMM 20/160B | 5,8 | 0,75 | 1 | 1,01 | | 31,6 | - | - | - | 30,5 | 30 | 29,5 | 28,5 | 27,5 | 26,5 | 25,5 | 24 | 22 |
| BNMM | NMM 20/160A | 7,4 | 1,1 | 1,5 | 1,44 | | 37 | - | - | - | 36 | 35,5 | 35 | 34,5 | 33,5 | 32 | 30,5 | 29 | 27 |

# NM, NMD

calpeda

## Performance n ≈ 1450 rpm

### Three-phase

| | | | | | | | Q = Flow | | | | | | | | | | | | | | | | | | |
|---|---|---|---|---|---|---|---|---|---|---|---|---|---|---|---|---|---|---|---|---|---|---|---|---|---|
| | | | | | | m³/h | 0 | 1 | 1,2 | 1,5 | 1,89 | 2,4 | 3 | 3,6 | 4,2 | 4,8 | 5,4 | 6 | 6,6 | 7,5 | 8,4 | 9,6 | 10,8 | 12 | 13,2 |
| Model | | 230V | 400V | P2 | | l/min | | 16,6 | 20 | 25 | 31,5 | 40 | 50 | 60 | 70 | 80 | 90 | 100 | 110 | 125 | 140 | 160 | 180 | 200 | 220 |
| | | A | | kW | HP | | H (m) = Total head | | | | | | | | | | | | | | | | | | |
| BNM4 | NM4 25/12A/A | 1,3 | 0,75 | 0,25 | 0,34 | | 6,1 | 6,1 | 6 | 6 | 5,9 | 5,8 | 5,5 | 5,2 | 4,8 | 4,4 | 3,9 | 3,3 | - | - | - | - | - | - | - |
| BNM4 | NM4 25/160B/A | 1,65 | 0,95 | 0,37 | 0,5 | | 7,8 | 7,7 | 7,6 | 7,6 | 7,5 | 7,5 | 7,2 | 6,9 | 6,6 | 6,1 | 5,5 | 4,6 | 3,6 | - | - | - | - | - | - |
| BNM4 | NM4 25/160A/A | 1,65 | 0,95 | 0,37 | 0,5 | | 9,4 | 9,2 | 9,1 | 9,1 | 9 | 9 | 8,7 | 8,5 | 8,2 | 7,8 | 7,2 | 6,5 | 5,6 | 3,7 | - | - | - | - | - |
| BNM4 | NM4 25/200C/B | 1,65 | 0,95 | 0,37 | 0,5 | | 11,7 | 11,5 | 11,4 | 11,4 | 11,3 | 11,2 | 11,1 | 10,9 | 10,7 | 10,5 | 10,2 | 9,8 | 9,4 | 8,6 | 7,7 | 6 | 3,6 | - | - |
| BNM4 | NM4 25/200B/B | 2,6 | 1,5 | 0,55 | 0,75 | | 13,2 | 13,2 | 13,2 | 13,2 | 13,1 | 13,1 | 13 | 12,9 | 12,7 | 12,5 | 12,3 | 11,9 | 11,5 | 11 | 10,3 | 8,9 | 6,9 | 4 | - |
| BNM4 | NM4 25/200A/C | 3,3 | 1,9 | 0,75 | 1 | | 14,5 | 14,5 | 14,5 | 14,5 | 14,5 | 14,5 | 14,4 | 14,3 | 14,2 | 14 | 13,8 | 13,5 | 13,2 | 12,7 | 12,1 | 11 | 9,2 | 6,7 | 2,9 |

## Coverage chart n ≈ 2900 rpm

### Three-phase

| | | | | | | | Q = Flow | | | | | | | | | | | | | | | | | |
|---|---|---|---|---|---|---|---|---|---|---|---|---|---|---|---|---|---|---|---|---|---|---|---|---|
| | | | | | | m³/h | 0 | 2,4 | 3 | 3,6 | 4,8 | 6 | 6,6 | 7,5 | 8,4 | 9,6 | 10,8 | 12 | 13,2 | 15 | 16,8 | 18 |
| Model | | 230V | 400V | 690V | P2 | l/min | | 40 | 50 | 60 | 80 | 100 | 110 | 125 | 140 | 160 | 180 | 200 | 220 | 250 | 280 | 300 |
| | | A | | | kW | HP | H (m) = Total head | | | | | | | | | | | | | | | | | |
| BNM | NM 25/12B/A | 2,8 | 1,6 | - | 0,55 | 0,75 | | 20,2 | 19,3 | 19,3 | 19,2 | 18,6 | 17,9 | 17,4 | 16,6 | 15,7 | 14,1 | 12,2 | 10 | - | - | - | - |
| BNM | NM 25/12A/B | 3,5 | 2 | - | 0,75 | 1 | | 23,8 | 23,5 | 23,4 | 23,3 | 22,9 | 22,1 | 21,7 | 20,9 | 20 | 18,7 | 17,1 | 15,2 | - | - | - | - |
| BNM | NM 25/160B/A | 4,6 | 2,7 | - | 1,1 | 1,5 | | 31,9 | - | 31 | 30,7 | 30 | 28,5 | 28 | 27 | 26 | 23 | - | - | - | - | - | - |
| BNM | NM 25/160A/A | 7,5 | 4,3 | - | 1,5 | 2 | | 37 | - | 36,5 | 36,2 | 35,5 | 34,5 | 34 | 33,5 | 32,5 | 31 | 28,5 | 26 | - | - | - | - |
| BNM | NM 25/20B/C | 9,6 | 5,5 | - | 2,2 | 3 | | 43,4 | - | 42,2 | 41,9 | 41,4 | 40,7 | 40,2 | 39,7 | 39 | 37,9 | 36,7 | 35,2 | 33,4 | - | - | - |
| BNM | NM 25/20A/B | 11,5 | 6,6 | - | 3 | 4 | | 50,5 | - | 49,9 | 49,8 | 49,4 | 48,9 | 48,5 | 48,1 | 47,5 | 46,6 | 45,6 | 44,4 | 43 | 40,8 | 37,9 | - |
| BNM | NM 25/20S/C | - | 9,6 | 5,5 | 4 | 5,5 | | 57,9 | - | 57,4 | 57,3 | 57 | 56,8 | 56,5 | 56,2 | 55,8 | 55,1 | 54,3 | 53,2 | 52 | 49,9 | 47,2 | 44,9 |
| BNMD | NMD 25/190C/B | 9,2 | 5,3 | - | 2,2 | 3 | | 66 | 62 | 60,5 | 59 | 55,5 | 51 | 48,5 | 44 | 38 | - | - | - | - | - | - | - |
| BNMD | NMD 25/190B/A | 11,5 | 6,6 | - | 3 | 4 | | 77 | 76 | 75 | 74 | 70 | 66 | 64 | 60 | 54 | 46 | - | - | - | - | - | - |
| BNMD | NMD 25/190A/B | - | 9,6 | 5,5 | 4 | 5,5 | | 101 | 98 | 97 | 96 | 93,5 | 90 | 88 | 84 | 79 | 70 | - | - | - | - | - | - |

### Single-phase

| | | | | | | | Q = Flow | | | | | | | | | | |
|---|---|---|---|---|---|---|---|---|---|---|---|---|---|---|---|---|---|
| | | | | | | m³/h | 0 | 2,4 | 3 | 3,6 | 4,8 | 6 | 6,6 | 7,5 | 8,4 | 9,6 | 10,8 | 12 |
| Model | | 230V | P2 | | P1 | l/min | | 40 | 50 | 60 | 80 | 100 | 110 | 125 | 140 | 160 | 180 | 200 |
| | | A | kW | HP | kW | | H (m) = Total head | | | | | | | | | | | |
| BNMM | NMM 25/12B/A | 4,5 | 0,55 | 0,75 | 0,78 | | 20,2 | 19,3 | 19,3 | 19,2 | 18,6 | 17,9 | 17,4 | 16,6 | 15,7 | 14,1 | 12,2 | 10 |
| BNMM | NMM 25/12A/A | 5,7 | 0,75 | 1 | 1,01 | | 23,8 | 23,5 | 23,4 | 23,3 | 22,9 | 22,1 | 21,7 | 20,9 | 20 | 18,7 | 17,1 | 15,2 |
| BNMM | NMM 25/160B | 7,4 | 1,1 | 1,5 | 1,44 | | 31,9 | - | 31 | 30,7 | 30 | 28,5 | 28 | 27 | 26 | 23 | - | - |
| BNMM | NMM 25/160A | 9,2 | 1,5 | 2 | 2 | | 37 | - | 36,5 | 36,2 | 35,5 | 34,5 | 34 | 33,5 | 32,5 | 31 | 28,5 | 26 |

### Three-phase

| | | | | | | | Q = Flow | | | | | | | | | | | | |
|---|---|---|---|---|---|---|---|---|---|---|---|---|---|---|---|---|---|---|---|
| | | | | | | m³/h | 0 | 6,6 | 7,5 | 8,4 | 9,6 | 10,8 | 12 | 13,2 | 15 | 16,8 | 18,9 | 21 | 24 |
| Model | 230V | 400V | 690V | P2 | | l/min | | 110 | 125 | 140 | 160 | 180 | 200 | 220 | 250 | 280 | 315 | 350 | 400 |
| | A | | | kW | HP | | H (m) = Total head | | | | | | | | | | | | |
| NM 10/F | 4 | 2,3 | - | 0,55 | 0,75 | | 13,2 | 12,5 | 12,5 | 12 | 11,5 | 11 | 10 | 9 | 7,5 | - | - | - | - |
| NM 10/D | 4 | 2,3 | - | 0,75 | 1 | | 18,8 | 18 | 18 | 17,5 | 17 | 16,5 | 16 | 15,5 | 14 | - | - | - | - |
| NM 10/A/A | 4,6 | 2,7 | - | 1,1 | 1,5 | | 23,5 | 23 | 23 | 22,5 | 22 | 21,5 | 21 | 20,5 | 19 | - | - | - | - |
| NM 10/S/A | 7,5 | 4,3 | - | 1,5 | 2 | | 24 | 23,5 | 23,5 | 23 | 22,5 | 22 | 21,5 | 21 | 20,5 | 19 | 18,5 | 16,5 | 13 |
| NM 11/B/A | 7,5 | 4,3 | - | 1,5 | 2 | | 30 | 29,5 | 29,5 | 29 | 28,5 | 27,5 | 27 | 26 | 25 | 22,5 | - | - | - |
| NM 11/A/B | 9,2 | 5,3 | - | 2,2 | 3 | | 36 | 35,5 | 35,5 | 35 | 34,5 | 34 | 33,5 | 33 | 32 | 30 | - | - | - |
| NM 12/D/B | 9,2 | 5,3 | - | 2,2 | 3 | | 41 | 38 | 37,5 | 37 | 36 | 35 | 33,5 | 32 | - | - | - | - | - |
| NM 12/C/A | 11,5 | 6,6 | - | 3 | 4 | | 46,4 | 45 | 44,5 | 44 | 43,5 | 42,5 | 41 | 40 | 38 | 36 | - | - | - |
| NM 12/A/B | - | 9,6 | 5,5 | 4 | 5,5 | | 56,8 | 57,5 | 57 | 56 | 55,5 | 55 | 54,5 | 53,5 | 51,5 | 49 | - | - | - |

# NM, NMD

## Coverage chart n ≈ 2900 rpm

### Single-phase

| Model | 230V | P2 | | P1 | Q = Flow | | | | | | | | | | | | |
|---|---|---|---|---|---|---|---|---|---|---|---|---|---|---|---|---|---|
| | | | | | m³/h | 0 | 6,6 | 7,5 | 8,4 | 9,6 | 10,8 | 12 | 13,2 | 15 | 16,8 | 18,9 | 21 | 24 |
| | | | | | l/min | | 110 | 125 | 140 | 160 | 180 | 200 | 220 | 250 | 280 | 315 | 350 | 400 |
| | A | kW | HP | kW | H (m) = Total head | | | | | | | | | | | | | |
| NMM 10/F | 4,5 | 0,55 | 0,75 | 0,78 | | 13,2 | 12,5 | 12,5 | 12 | 11,5 | 11 | 10 | 9 | 7,5 | - | - | - | - |
| NMM 10/D | 5,8 | 0,75 | 1 | 1,01 | | 18,8 | 18 | 18 | 17,5 | 17 | 16,5 | 16 | 15,5 | 14 | - | - | - | - |
| NMM 10/A | 7,4 | 1,1 | 1,5 | 1,44 | | 23,5 | 23 | 23 | 22,5 | 22 | 21,5 | 21 | 20,5 | 19 | - | - | - | - |
| NMM 10/S | 9,2 | 1,5 | 2 | 2 | | 24 | 23,5 | 23,5 | 23 | 22,5 | 22 | 21,5 | 21 | 20,5 | 19 | 18,5 | 16,5 | 13 |
| NMM 11/B | 9,2 | 1,5 | 2 | 2 | | 27 | 26,5 | 25,5 | 25 | 24 | 23 | 22,5 | 21,5 | 19,5 | 17,5 | - | - | - |
| NMM 11/A | 11,2 | 1,8 | 2,5 | 2,5 | | 30,2 | 30,2 | 30,1 | 29,8 | 29,4 | 28,8 | 28,1 | 27,4 | 26 | 24,5 | - | - | - |

### Three-phase

| Model | | 400V | 690V | P2 | | Q = Flow | | | | | | | | | | | | | | | |
|---|---|---|---|---|---|---|---|---|---|---|---|---|---|---|---|---|---|---|---|---|---|
| | | | | | | m³/h | 0 | 5,4 | 6 | 6,6 | 7,5 | 8,4 | 9,6 | 10,8 | 12 | 13,2 | 15 | 16,8 | 18,9 | 21 | 24 |
| | | | | | | l/min | | 90 | 100 | 110 | 125 | 140 | 160 | 180 | 200 | 220 | 250 | 280 | 315 | 350 | 400 |
| | | A | | kW | HP | H (m) = Total head | | | | | | | | | | | | | | | |
| BNMD | NMD 32/210D/B | 9,6 | 5,5 | 4 | 5,5 | | 79 | 71 | 69 | 67,5 | 65 | 62,5 | 58 | 53 | 46 | 37 | - | - | - | - | - |
| BNMD | NMD 32/210C/A | 10,8 | 6,2 | 5,5 | 7,5 | | 88 | 84 | 83 | 82 | 81 | 79 | 76 | 73 | 69 | 64 | 54 | - | - | - | - |
| BNMD | NMD 32/210B/A | 14,3 | 8,3 | 7,5 | 10 | | 109 | 104 | 103 | 102 | 100 | 98 | 95 | 92 | 88 | 84 | 76 | - | - | - | - |
| BNMD | NMD 32/210A/B | 18,5 | 10,7 | 9,2 | 12,5 | | 119 | 114 | 113 | 112 | 110 | 108 | 105 | 103 | 99 | 96 | 90 | - | - | - | - |
| BNMD | NMD 40/180D/B | 9,6 | 5,5 | 4 | 5,5 | | 62 | - | - | - | 60 | 59,5 | 57 | 56 | 53 | 51,5 | 48 | 44 | 39 | 34 | 25 |
| BNMD | NMD 40/180C/A | 10,8 | 6,2 | 5,5 | 7,5 | | 71 | - | - | - | 69 | 68 | 67 | 66 | 64,5 | 63 | 60 | 57 | 53 | 48 | 40 |
| BNMD | NMD 40/180B/A | 14,3 | 8,3 | 7,5 | 10 | | 87 | - | - | - | 87 | 86 | 85 | 84 | 82,5 | 81 | 78 | 75 | 71 | 66 | 59 |
| BNMD | NMD 40/180A/B | 18,5 | 10,7 | 9,2 | 12,5 | | 94 | - | - | - | 94 | 93 | 92 | 91 | 89,5 | 88 | 85 | 82 | 78 | 74 | 67 |

### Three-phase

| Model | | 230V | 400V | P2 | | Q = Flow | | | | | | | | | | | | |
|---|---|---|---|---|---|---|---|---|---|---|---|---|---|---|---|---|---|---|
| | | | | | | m³/h | 0 | 21 | 24 | 27 | 30 | 33 | 37,8 | 42 | 48 | 54 | 60 | 66 |
| | | | | | | l/min | | 350 | 400 | 450 | 500 | 550 | 630 | 700 | 800 | 900 | 1000 | 1100 |
| | | A | | kW | HP | H (m) = Total head | | | | | | | | | | | | |
| BNM | NM 17/H/A | 4,6 | 2,7 | 1,1 | 1,5 | | 10 | 9,5 | 9,2 | 9 | 8,6 | 8,2 | 7,5 | 6,7 | 5,5 | 3,5 | - | - |
| BNM | NM 17/G/A | 7,5 | 4,3 | 1,5 | 2 | | 13 | 12 | 11,7 | 11,5 | 11,2 | 11 | 10,3 | 9,7 | 8,5 | 7 | 4 | - |
| BNM | NM 17/F/B | 9,2 | 5,3 | 2,2 | 3 | | 16,1 | - | 16 | 16 | 15,5 | 15 | 14,5 | 14 | 13 | 11,5 | 10 | 8 |
| BNM | NM 17/D/A | 11,5 | 6,6 | 3 | 4 | | 18,4 | - | - | 18 | 18 | 17,5 | 17 | 16,5 | 15,5 | 14 | 13 | 11,5 |

### Single-phase

| Model | | 230V | P2 | | P1 | Q = Flow | | | | | | | | | | | |
|---|---|---|---|---|---|---|---|---|---|---|---|---|---|---|---|---|---|
| | | | | | | m³/h | 0 | 21 | 24 | 27 | 30 | 33 | 37,8 | 42 | 48 | 54 | 60 |
| | | | | | | l/min | | 350 | 400 | 450 | 500 | 550 | 630 | 700 | 800 | 900 | 1000 |
| | | A | kW | HP | kW | H (m) = Total head | | | | | | | | | | | |
| BNMM | NMM 17/H | 7,4 | 1,1 | 1,5 | 1,44 | | 10 | 9,5 | 9,2 | 9 | 8,6 | 8,2 | 7,5 | 6,7 | 5,5 | 3,5 | - |
| BNMM | NMM 17/G | 9,2 | 1,5 | 2 | 2 | | 13 | 12 | 11,7 | 11,5 | 11,2 | 11 | 10,3 | 9,7 | 8,5 | 7 | 4 |

**P1:** Maximum power input.
**P2:** Rated motor power output.
**H:** Total head in m

# NM, NMD

## Characteristic curves n ≈ 2900 rpm

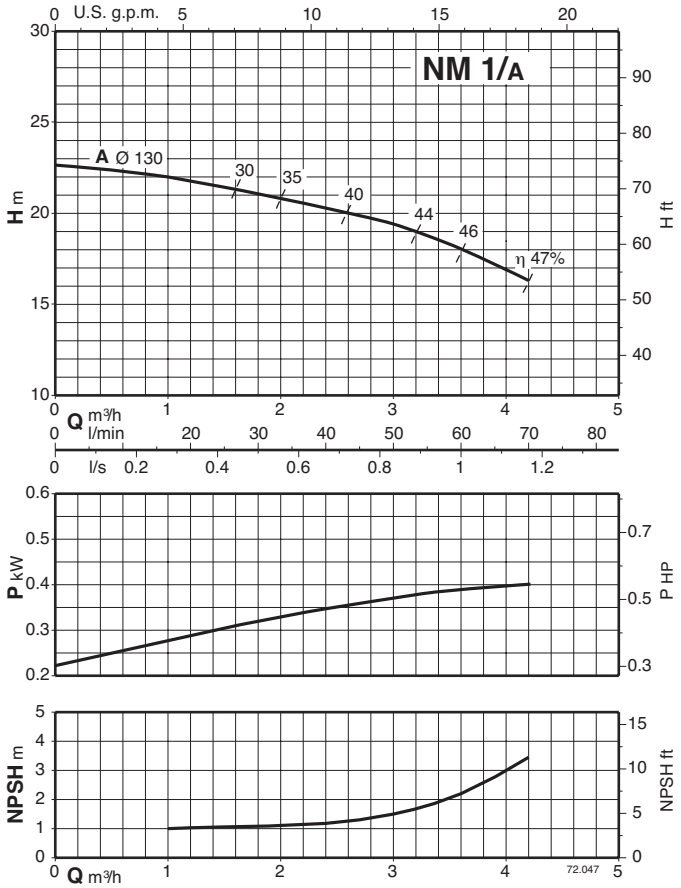


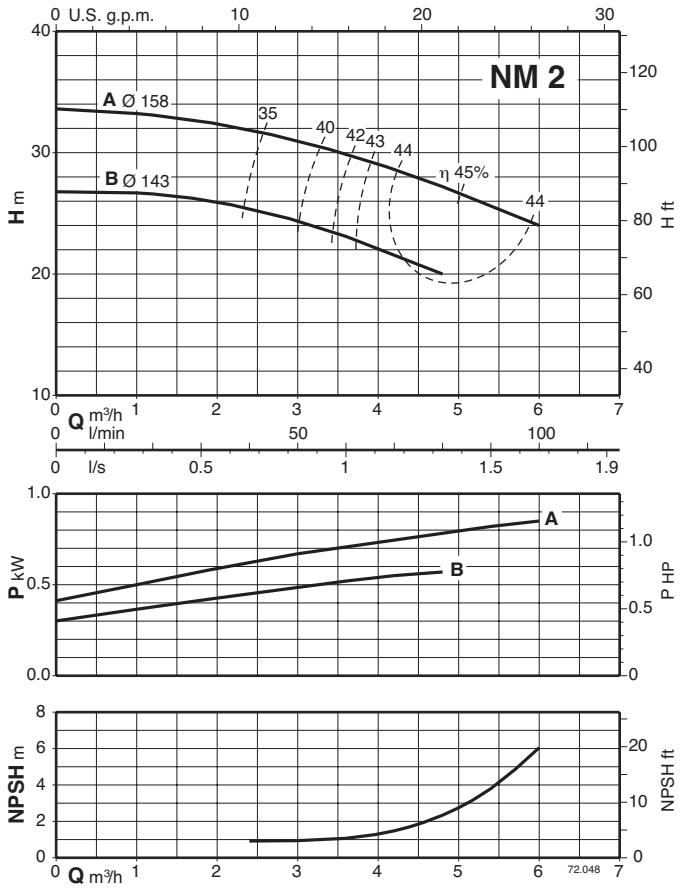


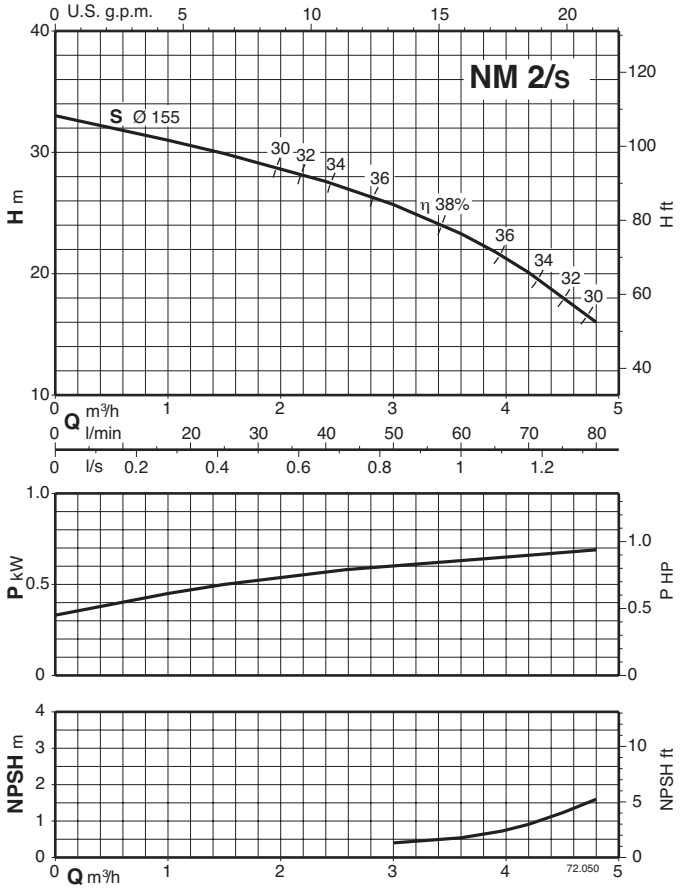


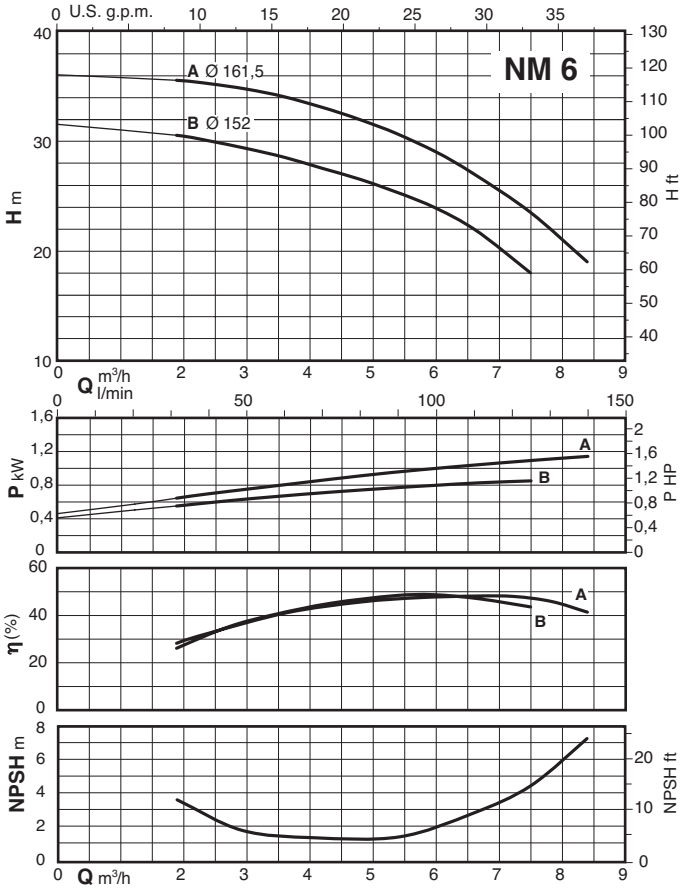

## Characteristic curves n ≈ 1450 rpm

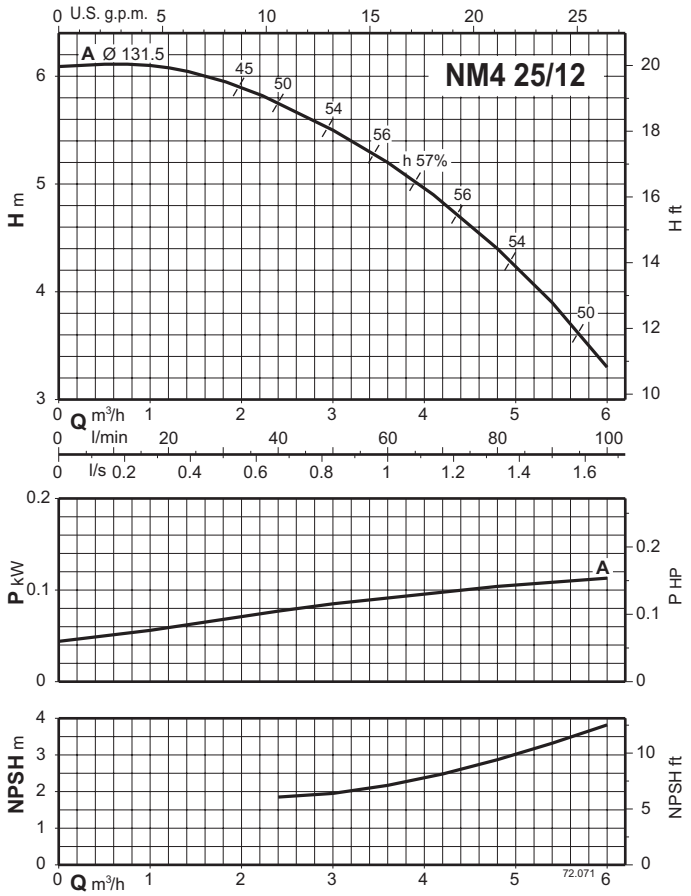


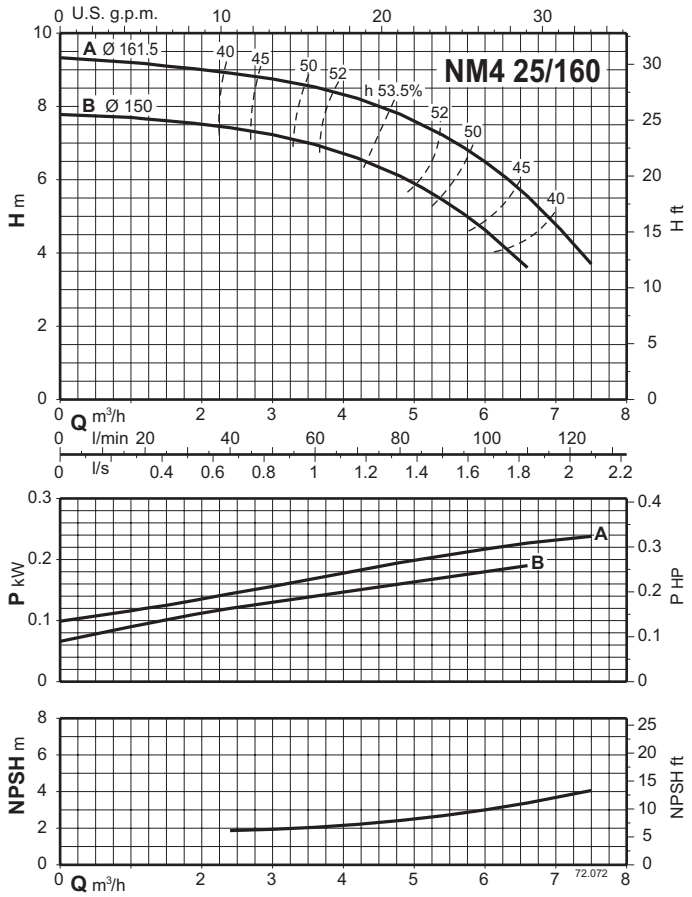


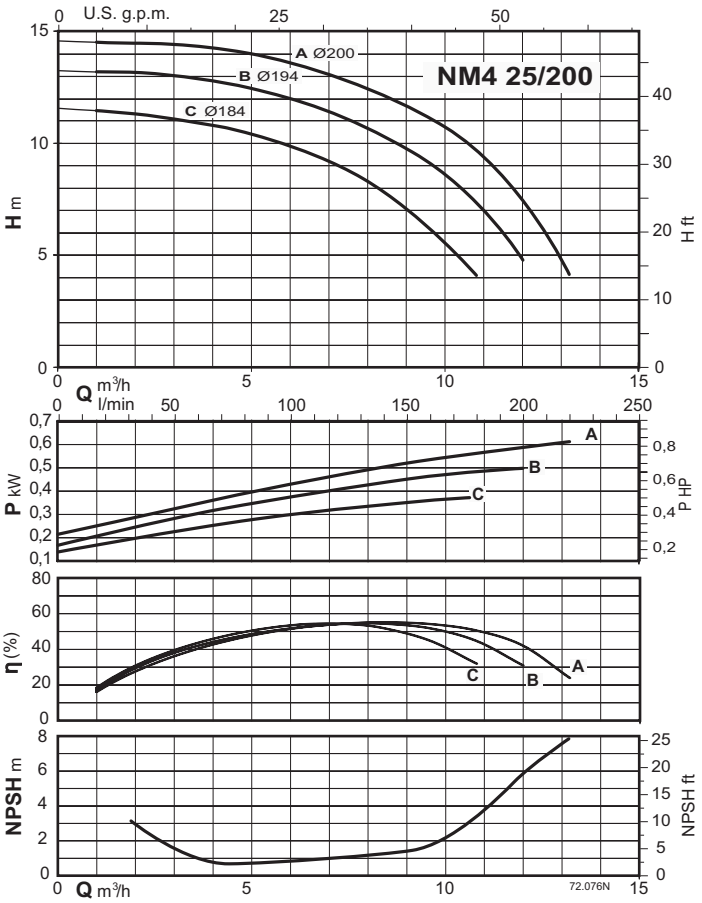

# NM, NMD

## Characteristic curves n ≈ 2900 rpm

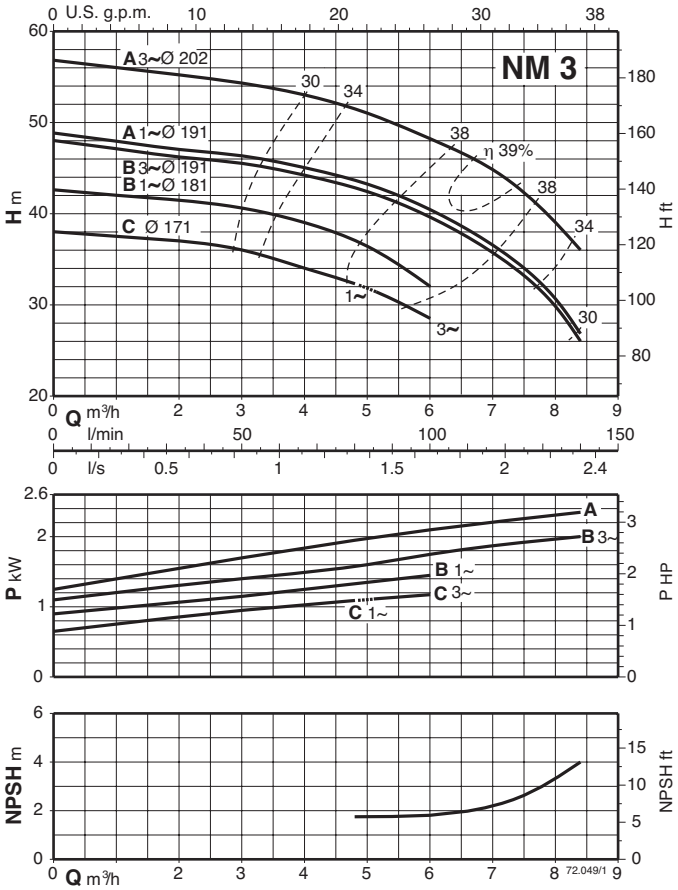


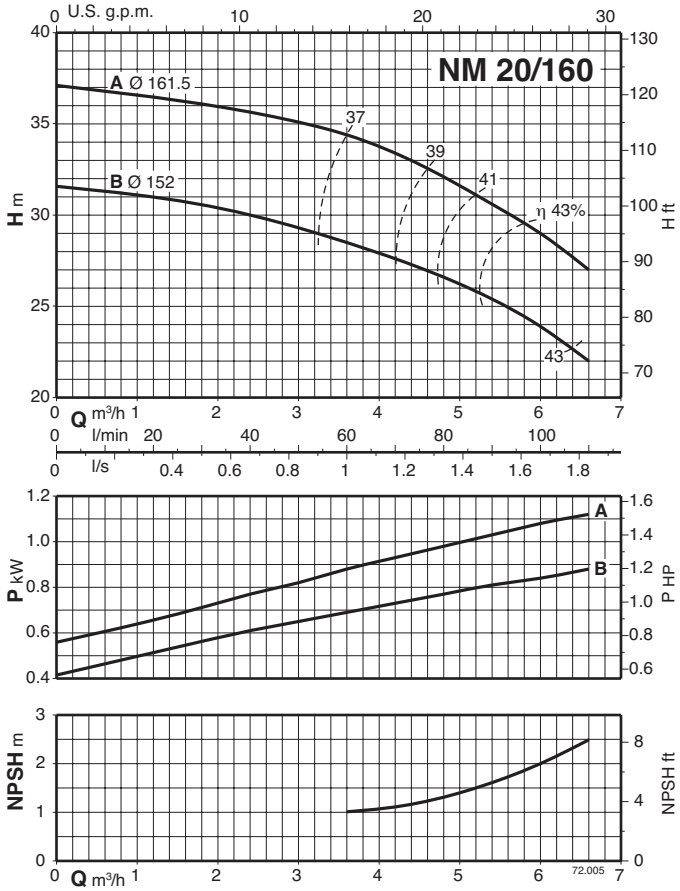


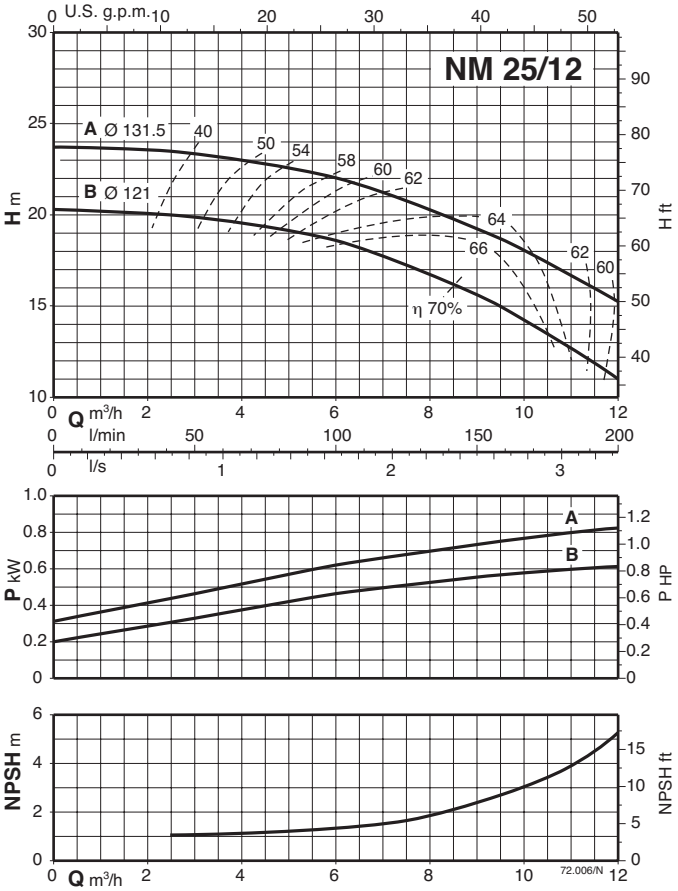


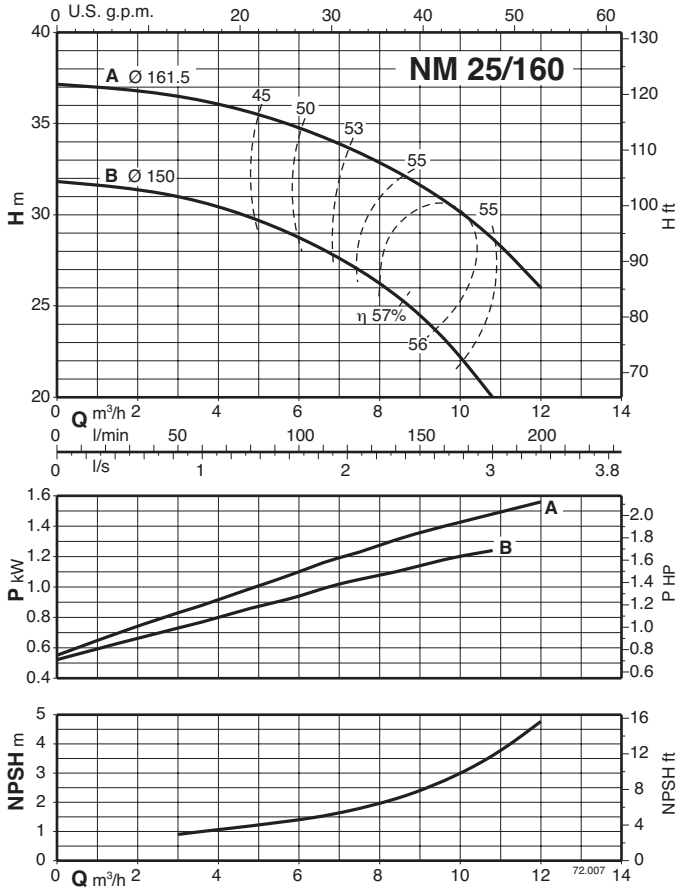

# NM, NMD

## Characteristic curves n ≈ 2900 rpm

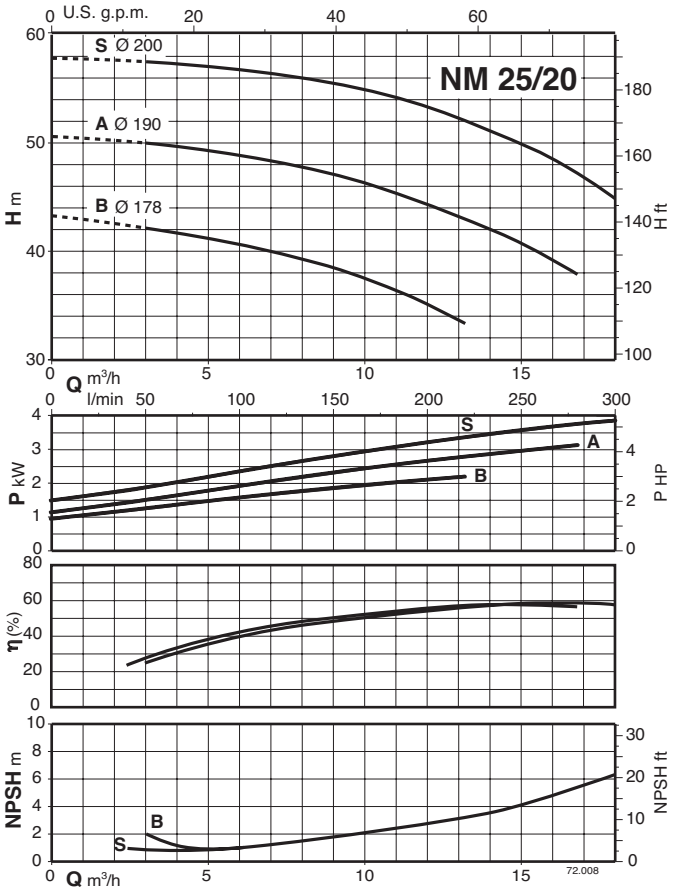


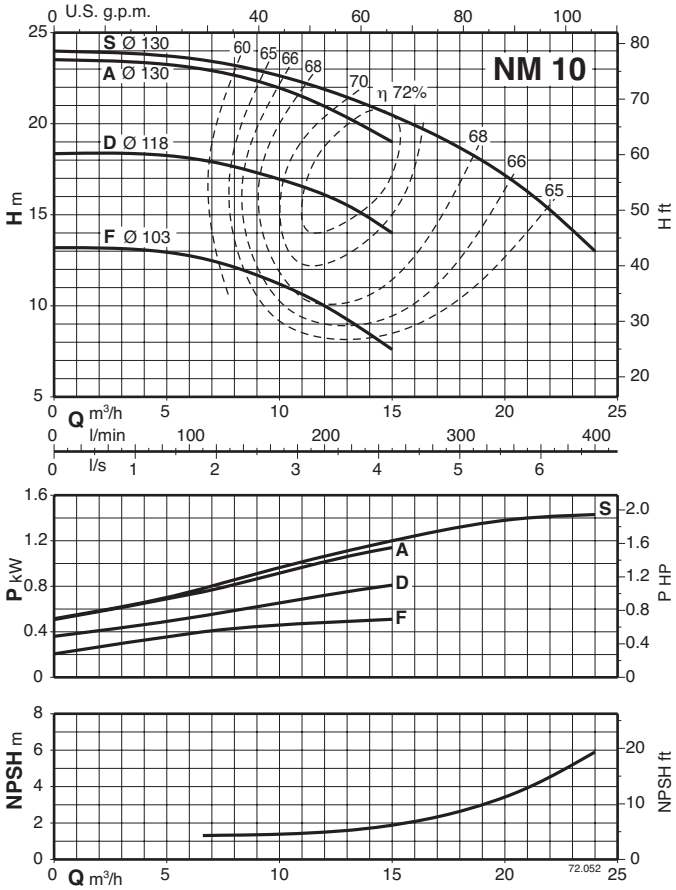


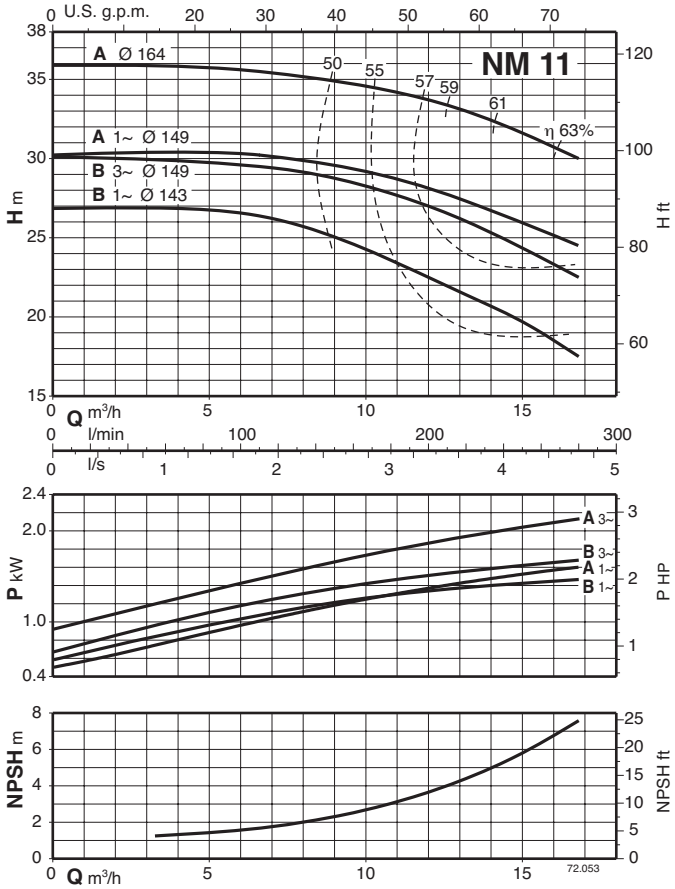


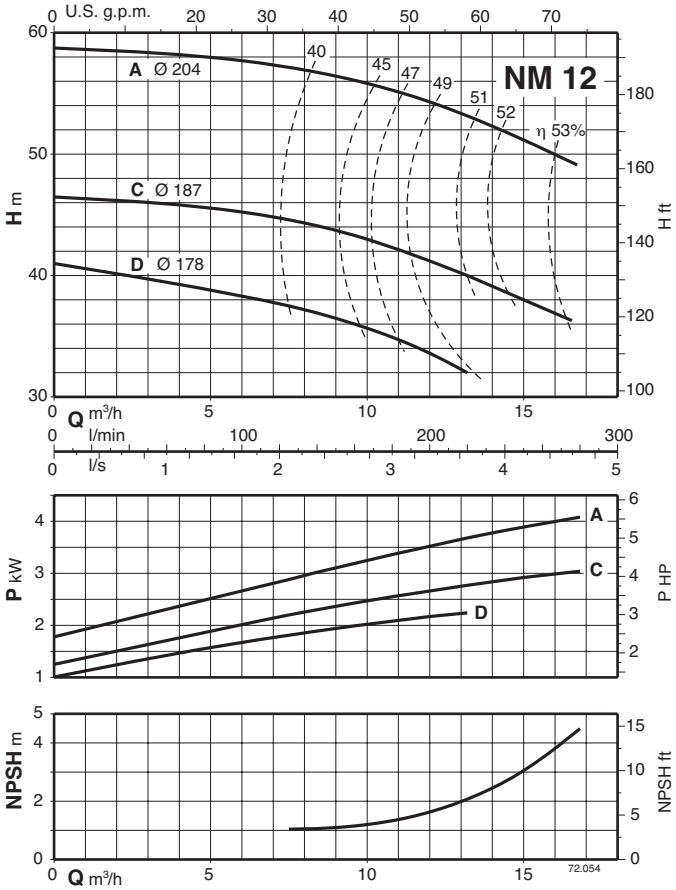

# NM, NMD

calpeda®

## Characteristic curves n ≈ 2900 rpm

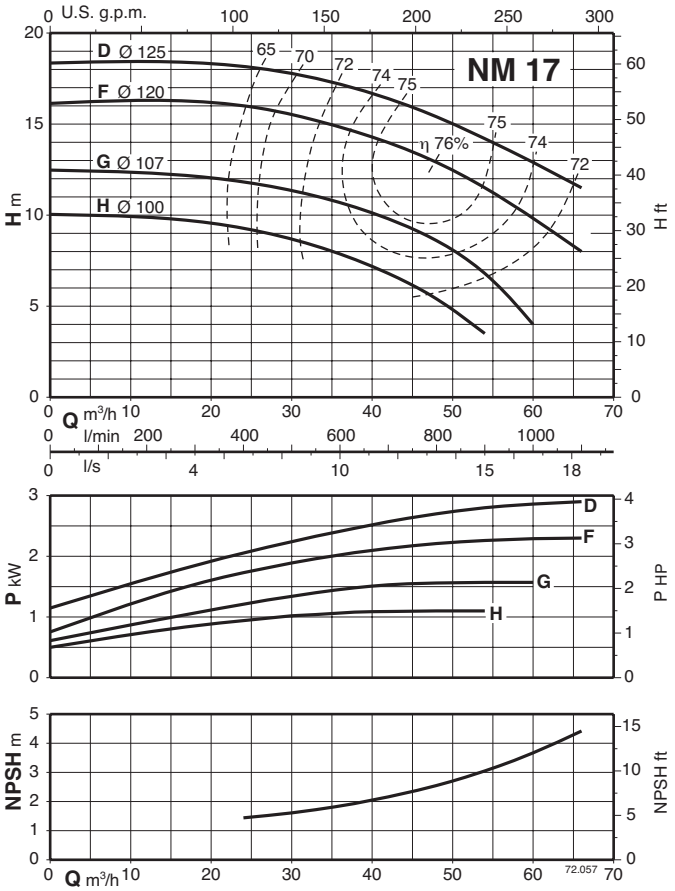


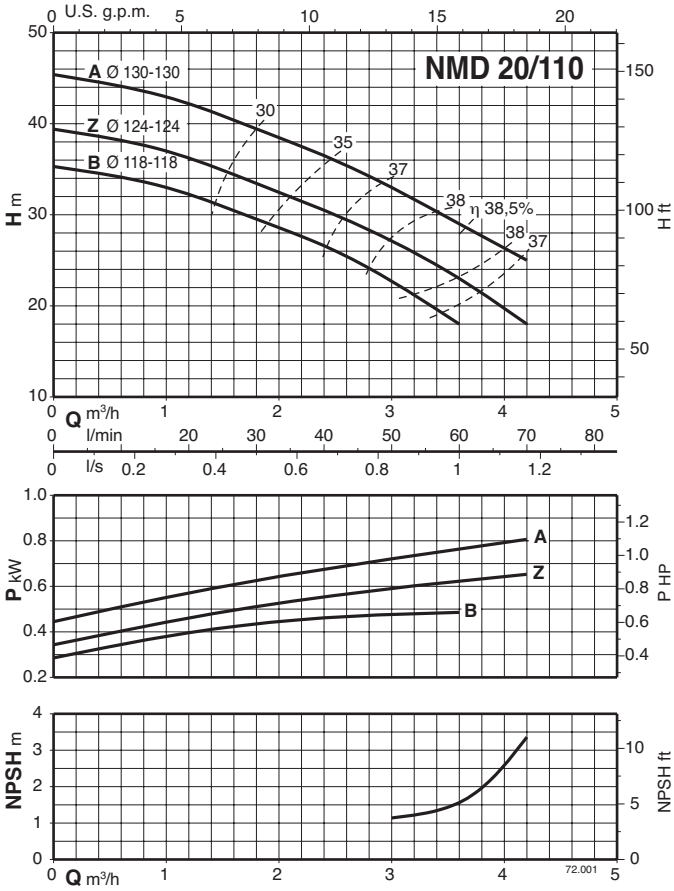


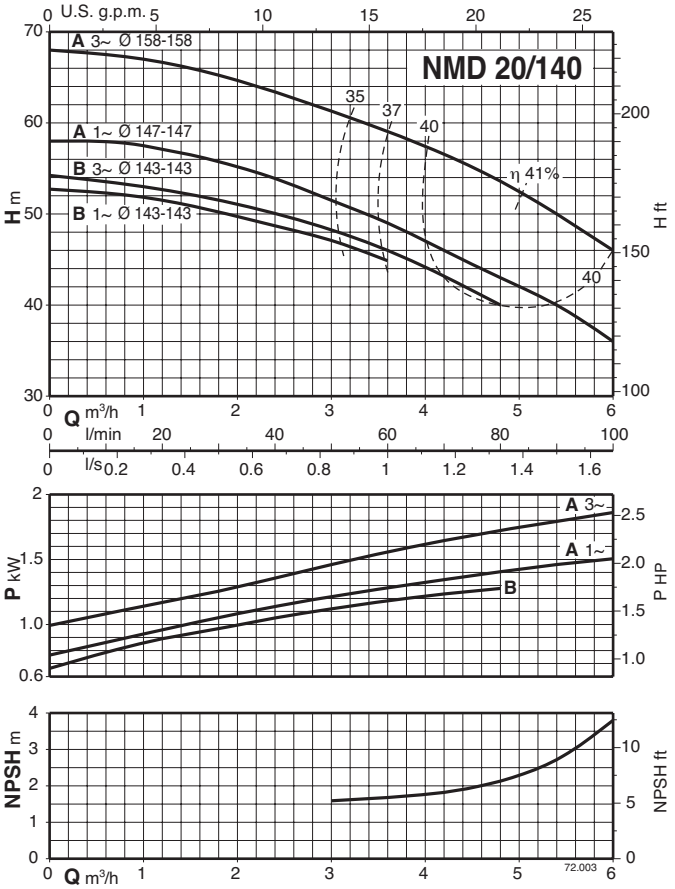


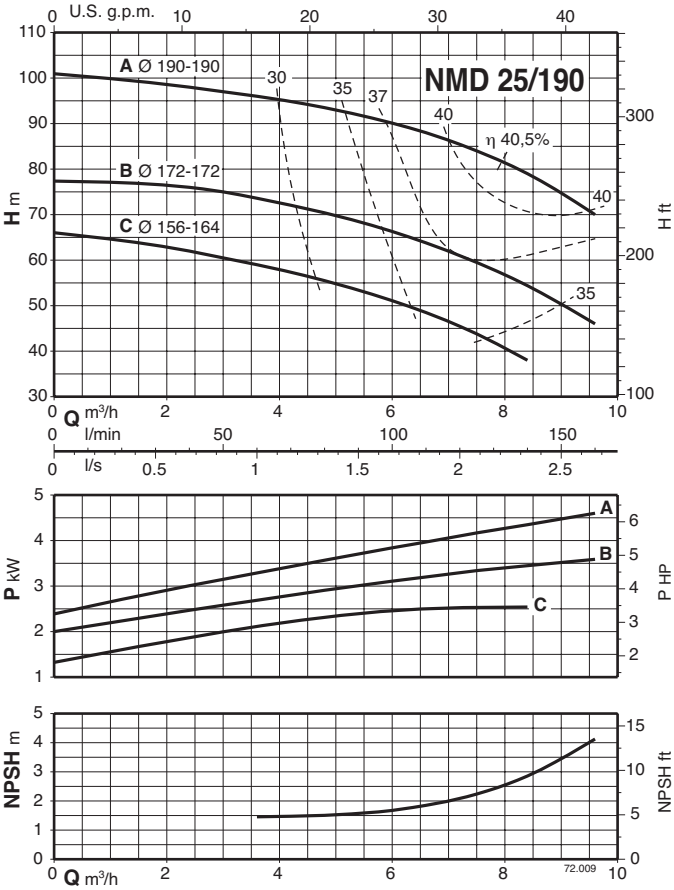

# NM, NMD

## Characteristic curves n ≈ 2900 rpm

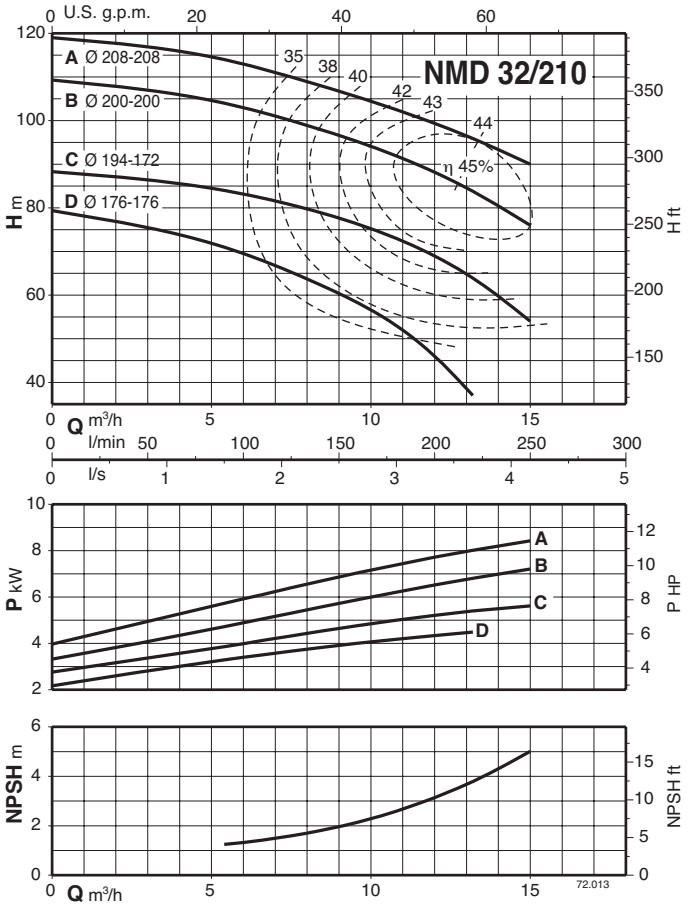


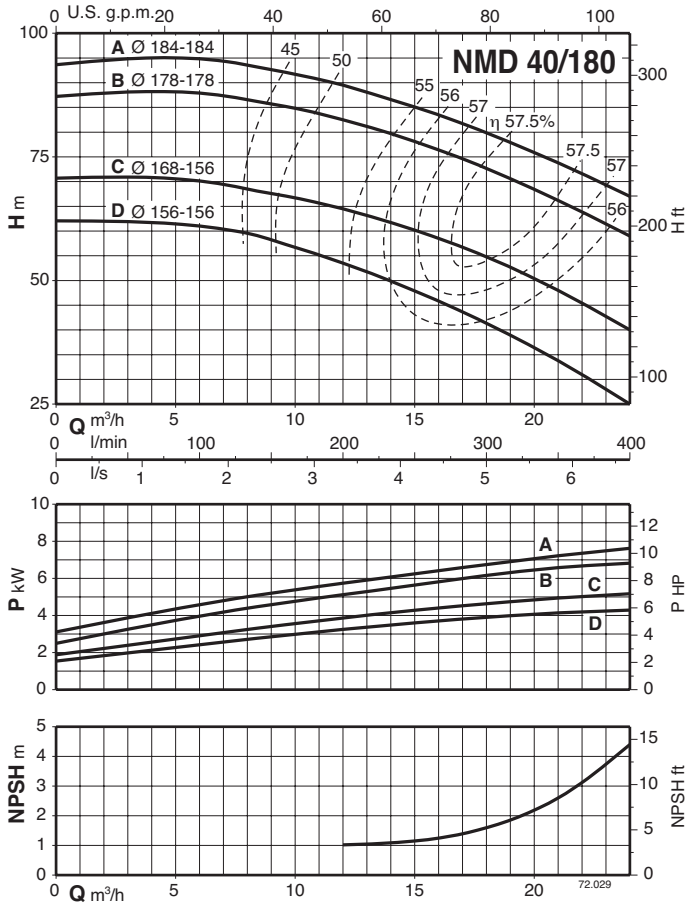

# NM, NMD

## Dimensions and weights

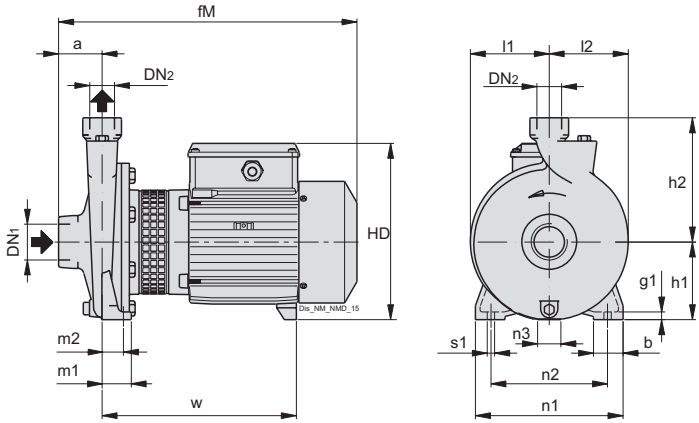


## Three-phase

| TYPE | ISO 228 | | mm | | | | | | | | | | | | | | | | kg |
|---|---|---|---|---|---|---|---|---|---|---|---|---|---|---|---|---|---|---|---|
| | DN1 | DN2 | a | b | fM | g1 | h1 | h2 | HD | l1 | l2 | m1 | m2 | n1 | n2 | n3 | s1 | w | Weight |
| NM 1/A | G 1" | G 1" | 40 | 35 | 261 | 10 | 80 | 132 | 179 | 76 | 81 | 40 | 32 | 170 | 140 | 20 | 9.5 | 174 | 8.8 |
| NM 2/B/A | G 1" | G 1" | 45 | 35 | 309 | 10 | 95 | 150 | 208 | 87 | 90 | 40 | 32 | 190 | 160 | 19.5 | 9.5 | 202 | 12.7 |
| NM 2/S/A | G 1" | G 1" | 45 | 35 | 309 | 10 | 95 | 150 | 208 | 87 | 90 | 40 | 32 | 190 | 160 | 19.5 | 9.5 | 202 | 13.2 |
| NM 2/A/B | G 1" | G 1" | 45 | 35 | 309 | 10 | 95 | 150 | 208 | 87 | 90 | 40 | 32 | 190 | 160 | 19.5 | 9.5 | 202 | 15.1 |
| NM 6/B | G 1 1/4" | G 1" | 53 | 38 | 349 | 11 | 100 | 150 | 213 | 92 | 96 | 37.5 | 27.5 | 190 | 150 | 19.5 | 9.5 | 234 | 17 |
| NM 6/A | G 1 1/4" | G 1" | 53 | 38 | 349 | 11 | 100 | 150 | 213 | 92 | 96 | 37.5 | 27.5 | 190 | 150 | 19.5 | 9.5 | 234 | 19 |
| NM 3/C/A | G 1" | G 1" | 50 | 45 | 377 | 12 | 112 | 180 | 242 | 111 | 114 | 55 | 43 | 245 | 205 | 31 | 11.5 | 247 | 23.3 |
| NM 3/B/A | G 1" | G 1" | 50 | 45 | 377 | 12 | 112 | 180 | 242 | 111 | 114 | 55 | 43 | 245 | 205 | 31 | 11.5 | 247 | 25 |
| NM 3/A/B | G 1" | G 1" | 50 | 45 | 417 | 12 | 112 | 180 | 242 | 111 | 114 | 55 | 43 | 245 | 205 | 31 | 11.5 | 287 | 28.2 |
| NM 10/F | G 2" | G 1 1/4" | 63 | 50 | 391 | 12 | 100 | 150 | 230 | 91 | 97 | 50 | 35 | 190 | 140 | 29 | 14 | 247 | 18.2 |
| NM 10/D | G 2" | G 1 1/4" | 63 | 50 | 391 | 12 | 100 | 150 | 230 | 91 | 97 | 50 | 35 | 190 | 140 | 29 | 14 | 247 | 18.2 |
| NM 10/A/A | G 2" | G 1 1/4" | 63 | 50 | 391 | 12 | 100 | 150 | 230 | 91 | 97 | 50 | 35 | 190 | 140 | 29 | 14 | 247 | 20.7 |
| NM 10/S/A | G 2" | G 1 1/4" | 63 | 50 | 391 | 12 | 100 | 150 | 230 | 91 | 97 | 50 | 35 | 190 | 140 | 29 | 14 | 247 | 21.9 |
| NM 11/B/A | G 2" | G 1 1/4" | 70 | 50 | 403 | 14 | 112 | 170 | 242 | 103 | 110 | 50 | 35 | 210 | 160 | 31 | 14 | 253 | 24.9 |
| NM 11/A/B | G 2" | G 1 1/4" | 70 | 50 | 443 | 14 | 112 | 170 | 242 | 103 | 110 | 50 | 35 | 210 | 160 | 31 | 14 | 293 | 28.8 |
| NM 12/D/B | G 2" | G 1 1/4" | 70 | 50 | 443 | 14 | 132 | 190 | 262 | 120 | 126 | 50 | 35 | 240 | 190 | 35 | 14 | 295 | 31.5 |
| NM 12/C/A | G 2" | G 1 1/4" | 70 | 50 | 469 | 14 | 132 | 190 | 272 | 120 | 126 | 50 | 35 | 240 | 190 | 32 | 14 | 294 | 38 |
| NM 12/A/B | G 2" | G 1 1/4" | 70 | 50 | 469 | 14 | 132 | 190 | 272 | 120 | 126 | 50 | 35 | 240 | 190 | 32 | 14 | 294 | 42.6 |
| NM 17/H/A | G 2 1/2" | G 2 1/2" | 80 | 50 | 423 | 14 | 112 | 160 | 242 | 96 | 112 | 50 | 35 | 210 | 160 | 31 | 14 | 263 | 22.8 |
| NM 17/G/A | G 2 1/2" | G 2 1/2" | 80 | 50 | 423 | 14 | 112 | 160 | 242 | 96 | 112 | 50 | 35 | 210 | 160 | 31 | 14 | 263 | 24.3 |
| NM 17/F/B | G 2 1/2" | G 2 1/2" | 80 | 50 | 463 | 14 | 112 | 160 | 242 | 96 | 112 | 50 | 35 | 210 | 160 | 31 | 14 | 303 | 27.7 |
| NM 17/D/A | G 2 1/2" | G 2 1/2" | 80 | 50 | 479 | 14 | 112 | 160 | 252 | 96 | 112 | 50 | 35 | 210 | 160 | 20 | 14 | 292 | 33.7 |
| NM 20/160B | G 1 1/4" | G 3/4" | 53 | 38 | 380 | 11 | 100 | 150 | 230 | 93 | 96 | 37.5 | 27.5 | 190 | 150 | 29 | 9.5 | 246 | 18.4 |
| NM 20/160A/A | G 1 1/4" | G 3/4" | 53 | 38 | 380 | 11 | 100 | 150 | 230 | 93 | 96 | 37.5 | 27.5 | 190 | 150 | 29 | 9.5 | 246 | 20.8 |
| NM 25/12B/A | G 1 1/2" | G 1" | 56 | 38 | 313 | 11 | 90 | 140 | 203 | 85 | 88 | 37.5 | 27.5 | 170 | 130 | 20 | 9.5 | 195 | 12.5 |
| NM 25/12A/B | G 1 1/2" | G 1" | 56 | 38 | 313 | 11 | 90 | 140 | 203 | 85 | 88 | 37.5 | 27.5 | 170 | 130 | 20 | 9.5 | 195 | 14.6 |
| NM 25/160B/A | G 1 1/2" | G 1" | 56 | 38 | 383 | 11 | 100 | 160 | 230 | 102 | 102 | 37.5 | 27.5 | 190 | 150 | 29 | 9.5 | 246 | 20.7 |
| NM 25/160A/A | G 1 1/2" | G 1" | 56 | 38 | 383 | 11 | 100 | 160 | 230 | 102 | 102 | 37.5 | 27.5 | 190 | 150 | 29 | 9.5 | 246 | 22.5 |
| NM 25/20B/C | G 1 1/2" | G 1" | 63 | 45 | 433 | 10 | 125 | 180 | 255 | 126 | 126 | 45 | 32.5 | 245 | 200 | 34 | 11.5 | 291 | 29.6 |
| NM 25/20A/B | G 1 1/2" | G 1" | 63 | 45 | 459 | 10 | 125 | 180 | 265 | 126 | 126 | 45 | 32.5 | 245 | 200 | 31 | 11.5 | 291 | 35.9 |
| NM 25/20S/C | G 1 1/2" | G 1" | 63 | 45 | 459 | 10 | 125 | 180 | 265 | 126 | 126 | 45 | 32.5 | 245 | 200 | 31 | 11.5 | 291 | 40.6 |
| BNM 17/H/A | G 2 1/2" | G 2 1/2" | 80 | 50 | 423 | 14 | 112 | 160 | 242 | 96 | 112 | 50 | 35 | 210 | 160 | 31 | 14 | 263 | 25.5 |
| BNM 17/G/A | G 2 1/2" | G 2 1/2" | 80 | 50 | 423 | 14 | 112 | 160 | 242 | 96 | 112 | 50 | 35 | 210 | 160 | 31 | 14 | 263 | 27 |
| BNM 17/F/B | G 2 1/2" | G 2 1/2" | 80 | 50 | 463 | 14 | 112 | 160 | 242 | 96 | 112 | 50 | 35 | 210 | 160 | 31 | 14 | 303 | 30.4 |
| BNM 17/D/A | G 2 1/2" | G 2 1/2" | 80 | 50 | 479 | 14 | 112 | 160 | 252 | 96 | 112 | 50 | 35 | 210 | 160 | 20 | 14 | 292 | 37.5 |
| BNM 20/160B | G 1 1/4" | G 3/4" | 53 | 38 | 420 | 11 | 100 | 150 | 230 | 93 | 96 | 37.5 | 27.5 | 190 | 150 | 29 | 9.5 | 286 | 20.1 |
| BNM 20/160A/A | G 1 1/4" | G 3/4" | 53 | 38 | 420 | 11 | 100 | 150 | 230 | 93 | 96 | 37.5 | 27.5 | 190 | 150 | 29 | 9.5 | 286 | 22.2 |
| BNM 25/12B/A | G 1 1/2" | G 1" | 56 | 38 | 313 | 11 | 90 | 140 | 203 | 85 | 88 | 37.5 | 27.5 | 170 | 130 | 20 | 9.5 | 195 | 13.7 |
| BNM 25/12A/B | G 1 1/2" | G 1" | 56 | 38 | 313 | 11 | 90 | 140 | 203 | 85 | 88 | 37.5 | 27.5 | 170 | 130 | 20 | 9.5 | 195 | 15.7 |
| BNM 25/160B/A | G 1 1/2" | G 1" | 56 | 38 | 423 | 11 | 100 | 160 | 230 | 102 | 102 | 37.5 | 27.5 | 190 | 150 | 29 | 9.5 | 286 | 22.6 |
| BNM 25/160A/A | G 1 1/2" | G 1" | 56 | 38 | 423 | 11 | 100 | 160 | 230 | 102 | 102 | 37.5 | 27.5 | 190 | 150 | 29 | 9.5 | 286 | 24.2 |
| BNM 25/200B/C | G 1 1/2" | G 1" | 63 | 45 | 445 | 10 | 125 | 180 | 255 | 126 | 126 | 45 | 32.5 | 245 | 200 | 34 | 11.5 | 303 | 33.4 |
| BNM 25/200A/B | G 1 1/2" | G 1" | 63 | 45 | 460 | 10 | 125 | 180 | 265 | 126 | 126 | 45 | 32.5 | 245 | 200 | 31 | 11.5 | 292 | 39.9 |
| BNM 25/200S/C | G 1 1/2" | G 1" | 63 | 45 | 460 | 10 | 125 | 180 | 265 | 126 | 126 | 45 | 32.5 | 245 | 200 | 31 | 11.5 | 292 | 43.9 |

# NM, NMD

## Dimensions and weights

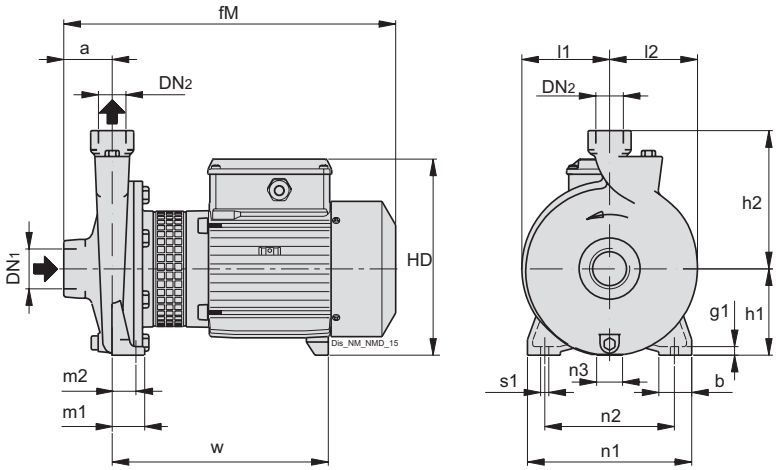


| TYPE | ISO 228 | | mm | | | | | | | | | | | | | | | | kg |
|---|---|---|---|---|---|---|---|---|---|---|---|---|---|---|---|---|---|---|---|
| | DN1 | DN2 | a | b | fM | g1 | h1 | h2 | HD | l1 | l2 | m1 | m2 | n1 | n2 | n3 | s1 | w | Weight |
| **NM4 25/12A/A** | G 1 1/2" | G 1" | 56 | 38 | 313 | 11 | 90 | 140 | 203 | 85 | 88 | 37.5 | 27.5 | 170 | 130 | 20 | 9.5 | 195 | 12.2 |
| **NM4 25/160B/A** | G 1 1/2" | G 1" | 56 | 38 | 383 | 11 | 100 | 160 | 230 | 102 | 102 | 37.5 | 27.5 | 190 | 150 | 29 | 9.5 | 246 | 18.7 |
| **NM4 25/160A/A** | G 1 1/2" | G 1" | 56 | 38 | 383 | 11 | 100 | 160 | 230 | 102 | 102 | 37.5 | 27.5 | 190 | 150 | 29 | 9.5 | 246 | 18.8 |
| **NM4 25/200C/B** | G 1 1/2" | G 1" | 63 | 45 | 390 | 10 | 125 | 180 | 255 | 126 | 126 | 45 | 32.5 | 245 | 200 | 34 | 11.5 | 248 | 22.7 |
| **NM4 25/200B/B** | G 1 1/2" | G 1" | 63 | 45 | 390 | 10 | 125 | 180 | 255 | 126 | 126 | 45 | 32.5 | 245 | 200 | 34 | 11.5 | 248 | 24.4 |
| **NM4 25/200A/C** | G 1 1/2" | G 1" | 63 | 45 | 430 | 10 | 125 | 180 | 255 | 126 | 126 | 45 | 32.5 | 245 | 200 | 34 | 11.5 | 288 | 29.7 |
| **BNM4 25/160B/A** | G 1 1/2 | G 1 | 56 | 38 | 383 | 11 | 100 | 160 | 230 | 102 | 102 | 37.5 | 27.5 | 190 | 150 | 29 | 9.5 | 286 | 19.9 |
| **BNM4 25/160A/A** | G 1 1/2 | G 1 | 56 | 38 | 383 | 11 | 100 | 160 | 230 | 102 | 102 | 37.5 | 27.5 | 190 | 150 | 29 | 9.5 | 286 | 19.9 |
| **BNM4 25/200C/B** | G 1 1/2 | G 1 | 63 | 45 | 365 | 10 | 125 | 180 | 255 | 126 | 126 | 45 | 32.5 | 245 | 200 | 34 | 11.5 | 263 | 26.3 |
| **BNM4 25/200B/B** | G 1 1/2 | G 1 | 63 | 45 | 365 | 10 | 125 | 180 | 255 | 126 | 126 | 45 | 32.5 | 245 | 200 | 34 | 11.5 | 263 | - |
| **BNM4 25/200A/C** | G 1 1/2" | G 1" | 63 | 45 | 405 | 10 | 125 | 180 | 254 | 126 | 126 | 45 | 32.5 | 245 | 200 | 34 | 11.5 | 263 | 32.6 |

# NM, NMD

## Dimensions and weights

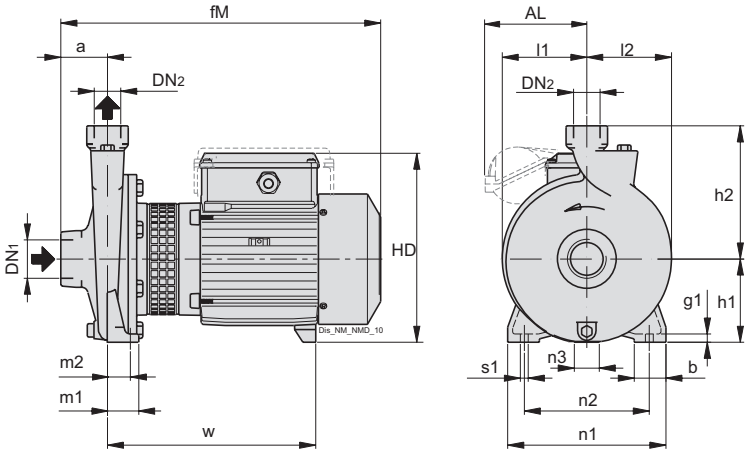


## Single-phase

| TYPE | ISO 228 | | mm | | | | | | | | | | | | | | | | | kg |
|---|---|---|---|---|---|---|---|---|---|---|---|---|---|---|---|---|---|---|---|---|
| | DN1 | DN2 | a | AL | b | fM | g1 | h1 | h2 | HD | l1 | l2 | m1 | m2 | n1 | n2 | n3 | s1 | w | Weight |
| NMM 1/A | G 1" | G 1" | 40 | - | 35 | 261 | 10 | 80 | 132 | 179 | 76 | 81 | 40 | 32 | 170 | 140 | 20 | 9.5 | 174 | 8.5 |
| NMM 2/B/A | G 1" | G 1" | 45 | - | 35 | 309 | 10 | 95 | 150 | 208 | 87 | 90 | 40 | 32 | 190 | 160 | 19.5 | 9.5 | 202 | 13.8 |
| NMM 2/S/A | G 1" | G 1" | 45 | - | 35 | 309 | 10 | 95 | 150 | 208 | 87 | 90 | 40 | 32 | 190 | 160 | 19.5 | 9.5 | 202 | 14.5 |
| NMM 2/A/A | G 1" | G 1" | 45 | - | 35 | 309 | 10 | 95 | 150 | 208 | 87 | 90 | 40 | 32 | 190 | 160 | 19.5 | 9.5 | 202 | 15.1 |
| NMM 6/B | G 1 1/4" | G 1" | 53 | - | 38 | 349 | 11 | 100 | 150 | 213 | 92 | 96 | 37.5 | 27.5 | 190 | 150 | 19.5 | 9.5 | 234 | 17.1 |
| NMM 6/A | G 1 1/4" | G 1" | 53 | - | 38 | 349 | 11 | 100 | 150 | 213 | 92 | 96 | 37.5 | 27.5 | 190 | 150 | 19.5 | 9.5 | 234 | 19.2 |
| NMM 3/C | G 1" | G 1" | 50 | - | 45 | 377 | 12 | 112 | 180 | 242 | 111 | 114 | 55 | 43 | 245 | 205 | 31 | 11.5 | 247 | 23.2 |
| NMM 3/B | G 1" | G 1" | 50 | - | 45 | 377 | 12 | 112 | 180 | 242 | 111 | 114 | 55 | 43 | 245 | 205 | 31 | 11.5 | 247 | 25.2 |
| NMM 3/A/A | G 1" | G 1" | 50 | 131 | 45 | 417 | 12 | 112 | 180 | 247 | 111 | 114 | 55 | 43 | 245 | 205 | 31 | 11.5 | 287 | 28.6 |
| NMM 10/F | G 2" | G 1 1/4" | 63 | - | 50 | 391 | 12 | 100 | 150 | 230 | 91 | 97 | 50 | 35 | 190 | 140 | 29 | 14 | 247 | 19.2 |
| NMM 10/D | G 2" | G 1 1/4" | 63 | - | 50 | 391 | 12 | 100 | 150 | 230 | 91 | 97 | 50 | 35 | 190 | 140 | 29 | 14 | 247 | 20.5 |
| NMM 10/A | G 2" | G 1 1/4" | 63 | - | 50 | 391 | 12 | 100 | 150 | 230 | 91 | 97 | 50 | 35 | 190 | 140 | 29 | 14 | 247 | 22.2 |
| NMM 10/S | G 2" | G 1 1/4" | 63 | - | 50 | 391 | 12 | 100 | 150 | 230 | 91 | 97 | 50 | 35 | 190 | 140 | 29 | 14 | 247 | 22.2 |
| NMM 11/B | G 2" | G 1 1/4" | 70 | - | 50 | 403 | 14 | 112 | 170 | 242 | 103 | 110 | 50 | 35 | 210 | 160 | 31 | 14 | 253 | 25 |
| NMM 11/A | G 2" | G 1 1/4" | 70 | 131 | 50 | 443 | 14 | 112 | 170 | 247 | 103 | 110 | 50 | 35 | 210 | 160 | 31 | 14 | 293 | 28.5 |
| NMM 17/H | G 2 1/2" | G 2 1/2" | 80 | - | 50 | 423 | 14 | 112 | 160 | 242 | 96 | 112 | 50 | 35 | 210 | 160 | 31 | 14 | 263 | 23.7 |
| NMM 17/G | G 2 1/2" | G 2 1/2" | 80 | - | 50 | 423 | 14 | 112 | 160 | 242 | 96 | 112 | 50 | 35 | 210 | 160 | 31 | 14 | 263 | 23.7 |
| NMM 20/160B | G 1 1/4" | G 3/4" | 53 | - | 38 | 380 | 11 | 100 | 150 | 230 | 93 | 96 | 37.5 | 27.5 | 190 | 150 | 29 | 9.5 | 246 | 20.8 |
| NMM 20/160A | G 1 1/4" | G 3/4" | 53 | - | 38 | 380 | 11 | 100 | 150 | 230 | 93 | 96 | 37.5 | 27.5 | 190 | 150 | 29 | 9.5 | 246 | 22.5 |
| NMM 25/12B/A | G 1 1/2" | G 1" | 56 | - | 38 | 313 | 11 | 90 | 140 | 203 | 85 | 88 | 37.5 | 27.5 | 170 | 130 | 20 | 9.5 | 195 | 13.5 |
| NMM 25/12A/A | G 1 1/2" | G 1" | 56 | - | 38 | 313 | 11 | 90 | 140 | 203 | 85 | 88 | 37.5 | 27.5 | 170 | 130 | 20 | 9.5 | 195 | 14.7 |
| NMM 25/160B | G 1 1/2" | G 1" | 56 | - | 38 | 383 | 11 | 100 | 160 | 230 | 102 | 102 | 37.5 | 27.5 | 190 | 150 | 29 | 9.5 | 246 | 21.2 |
| NMM 25/160A | G 1 1/2" | G 1" | 56 | - | 38 | 383 | 11 | 100 | 160 | 230 | 102 | 102 | 37.5 | 27.5 | 190 | 150 | 29 | 9.5 | 246 | 23 |
| BNMM 20/160B | G 1 1/4" | G 3/4" | 53 | - | 38 | 420 | 11 | 100 | 150 | 230 | 93 | 96 | 37.5 | 27.5 | 190 | 150 | 29 | 9.5 | 286 | - |
| BNMM 20/160A | G 1 1/4" | G 3/4" | 53 | - | 38 | 420 | 11 | 100 | 150 | 230 | 93 | 96 | 37.5 | 27.5 | 190 | 150 | 29 | 9.5 | 286 | 23.9 |
| BNMM 25/12B/A | G 1 1/2" | G 1" | 56 | - | 38 | 313 | 11 | 90 | 140 | 203 | 85 | 88 | 37.5 | 27.5 | 170 | 130 | 20 | 9.5 | 195 | 13.7 |
| BNMM 25/12A/A | G 1 1/2" | G 1" | 56 | - | 38 | 313 | 11 | 90 | 140 | 203 | 85 | 88 | 37.5 | 27.5 | 170 | 130 | 20 | 9.5 | 195 | 15.7 |
| BNMM 25/160B | G 1 1/2" | G 1" | 56 | - | 38 | 423 | 11 | 100 | 160 | 230 | 102 | 102 | 37.5 | 27.5 | 190 | 150 | 29 | 9.5 | 286 | 24.3 |
| BNMM 25/160A | G 1 1/2" | G 1" | 56 | - | 38 | 423 | 11 | 100 | 160 | 230 | 102 | 102 | 37.5 | 27.5 | 190 | 150 | 29 | 9.5 | 286 | 24.3 |
| BNMM 17/H | G 2 1/2" | G 2 1/2" | 80 | - | 50 | 423 | 14 | 112 | 160 | 242 | 96 | 112 | 50 | 35 | 210 | 160 | 31 | 14 | 263 | 26.5 |
| BNMM 17/G | G 2 1/2" | G 2 1/2" | 80 | - | 50 | 423 | 14 | 112 | 160 | 242 | 96 | 112 | 50 | 35 | 210 | 160 | 31 | 14 | 263 | 26.5 |

# NM, NMD

## Dimensions and weights

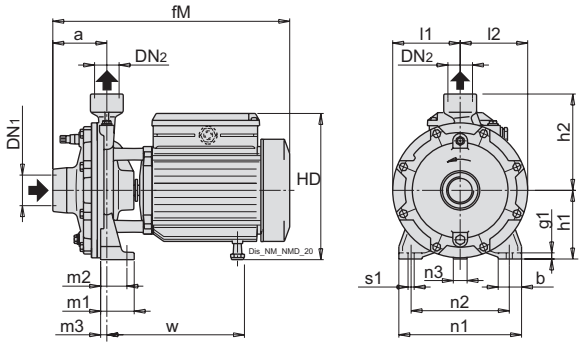


### Three-phase

| TYPE | ISO 228 | | mm | | | | | | | | | | | | | | | | | kg |
|---|---|---|---|---|---|---|---|---|---|---|---|---|---|---|---|---|---|---|---|---|
| | DN1 | DN2 | a | b | fM | g1 | h1 | h2 | HD | l1 | l2 | m1 | m2 | m3 | n1 | n2 | n3 | s1 | w | Weight |
| NMD 20/110B/A | G 1 1/4" | G 1" | 74 | 38 | 325 | 10 | 95 | 132 | 206 | 93 | 93 | 46 | 36 | 8.5 | 170 | 130 | 19.5 | 9.5 | 189 | 12.2 |
| NMD 20/110Z/A | G 1 1/4" | G 1" | 74 | 38 | 325 | 10 | 95 | 132 | 206 | 93 | 93 | 46 | 36 | 8.5 | 170 | 130 | 19.5 | 9.5 | 189 | 13.4 |
| NMD 20/110A/B | G 1 1/4" | G 1" | 74 | 38 | 325 | 10 | 95 | 132 | 206 | 93 | 93 | 46 | 36 | 8.5 | 170 | 130 | 19.5 | 9.5 | 189 | 15.5 |
| BNMD 20/110B/A | G 1 1/4" | G 1" | 74 | 38 | 325 | 10 | 95 | 132 | 206 | 93 | 93 | 46 | 36 | 8.5 | 170 | 130 | 19.5 | 9.5 | 189 | 13.6 |
| BNMD 20/110Z/A | G 1 1/4" | G 1" | 74 | 38 | 325 | 10 | 95 | 132 | 206 | 93 | 93 | 46 | 36 | 8.5 | 170 | 130 | 19.5 | 9.5 | 189 | 14 |
| BNMD 20/110A/B | G 1 1/4" | G 1" | 74 | 38 | 325 | 10 | 95 | 132 | 206 | 93 | 93 | 46 | 36 | 8.5 | 170 | 130 | 19.5 | 9.5 | 189 | 16.5 |

### Single-phase

| TYPE | ISO 228 | | mm | | | | | | | | | | | | | | | | | kg |
|---|---|---|---|---|---|---|---|---|---|---|---|---|---|---|---|---|---|---|---|---|
| | DN1 | DN2 | a | b | fM | g1 | h1 | h2 | HD | l1 | l2 | m1 | m2 | m3 | n1 | n2 | n3 | s1 | w | Weight |
| NMDM 20/110B/A | G 1 1/4" | G 1" | 74 | 38 | 325 | 10 | 95 | 132 | 206 | 93 | 93 | 46 | 36 | 8.5 | 170 | 130 | 19.5 | 9.5 | 189 | 13.2 |
| NMDM 20/110Z/A | G 1 1/4" | G 1" | 74 | 38 | 325 | 10 | 95 | 132 | 206 | 93 | 93 | 46 | 36 | 8.5 | 170 | 130 | 19.5 | 9.5 | 189 | 14.5 |
| NMDM 20/110A/A | G 1 1/4" | G 1" | 74 | 38 | 325 | 10 | 95 | 132 | 206 | 93 | 93 | 46 | 36 | 8.5 | 170 | 130 | 19.5 | 9.5 | 189 | 15.5 |
| BNMDM 20/110B/A | G 1 1/4" | G 1" | 74 | 38 | 325 | 10 | 95 | 132 | 206 | 93 | 93 | 46 | 36 | 8.5 | 170 | 130 | 19.5 | 9.5 | 189 | 14.3 |
| BNMDM 20/110Z/A | G 1 1/4" | G 1" | 74 | 38 | 325 | 10 | 95 | 132 | 206 | 93 | 93 | 46 | 36 | 8.5 | 170 | 130 | 19.5 | 9.5 | 189 | - |
| BNMDM 20/110A/A | G 1 1/4" | G 1" | 74 | 38 | 325 | 10 | 95 | 132 | 206 | 93 | 93 | 46 | 36 | 8.5 | 170 | 130 | 19.5 | 9.5 | 189 | 16.4 |

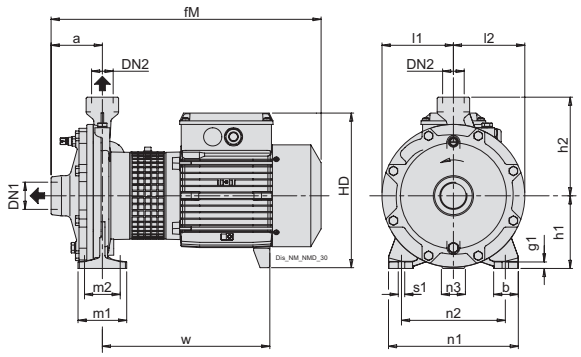


### Three-phase

| TYPE | ISO 228 | | mm | | | | | | | | | | | | | | | | | kg |
|---|---|---|---|---|---|---|---|---|---|---|---|---|---|---|---|---|---|---|---|---|
| | DN1 | DN2 | a | b | fM | g1 | h1 | h2 | HD | l1 | l2 | m1 | m2 | n1 | n2 | n3 | s1 | w | | Weight |
| NMD 20/140B/A | G 1 1/4" | G 1" | 79 | 38 | 416 | 10 | 112 | 150 | 242 | 110 | 110 | 75 | 55 | 200 | 160 | 31 | 9.5 | 257 | | 23.5 |
| NMD 20/140A/A | G 1 1/4" | G 1" | 79 | 38 | 416 | 10 | 112 | 150 | 242 | 110 | 110 | 75 | 55 | 200 | 160 | 31 | 9.5 | 257 | | 25.2 |
| BNMD 20/140B/A | G 1 1/4" | G 1" | 79 | 38 | 416 | 10 | 112 | 150 | 242 | 110 | 110 | 75 | 55 | 200 | 160 | 31 | 9.5 | 257 | | 26.5 |
| BNMD 20/140A/A | G 1 1/4" | G 1" | 79 | 38 | 416 | 10 | 112 | 150 | 242 | 110 | 110 | 75 | 55 | 200 | 160 | 31 | 9.5 | 257 | | 22.9 |

### Single-phase

| TYPE | ISO 228 | | mm | | | | | | | | | | | | | | | | | kg |
|---|---|---|---|---|---|---|---|---|---|---|---|---|---|---|---|---|---|---|---|---|
| | DN1 | DN2 | a | b | fM | g1 | h1 | h2 | HD | l1 | l2 | m1 | m2 | n1 | n2 | n3 | s1 | w | | Weight |
| NMDM 20/140BE | G 1 1/4" | G 1" | 79 | 38 | 416 | 10 | 112 | 150 | 242 | 110 | 110 | 75 | 55 | 200 | 160 | 31 | 9.5 | 257 | | 23.6 |
| NMDM 20/140AE | G 1 1/4" | G 1" | 79 | 38 | 416 | 10 | 112 | 150 | 242 | 110 | 110 | 75 | 55 | 200 | 160 | 31 | 9.5 | 257 | | 25.7 |
| BNMDM 20/140BE | G 1 1/4" | G 1" | 79 | 38 | 416 | 10 | 112 | 150 | 242 | 110 | 110 | 75 | 55 | 200 | 160 | 31 | 9.5 | 257 | | 27.5 |
| BNMDM 20/140AE | G 1 1/4" | G 1" | 79 | 38 | 416 | 10 | 112 | 150 | 242 | 110 | 110 | 75 | 55 | 200 | 160 | 31 | 9.5 | 257 | | 28.2 |

# NM, NMD

## Dimensions and weights

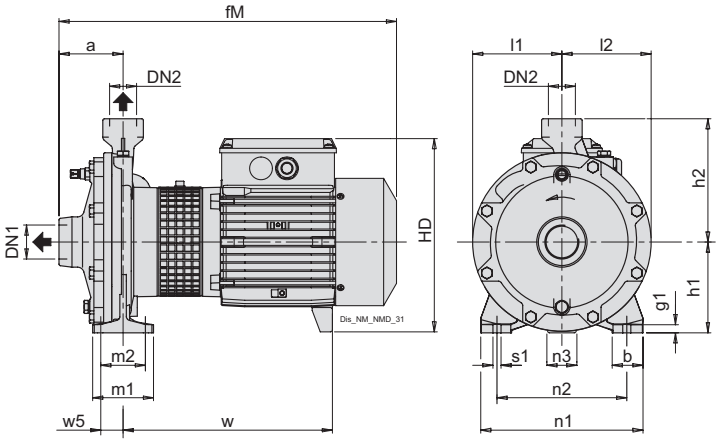


### Three-phase

| TYPE | | | mm | | | | | | | | | | | | | | | | | kg |
|---|---|---|---|---|---|---|---|---|---|---|---|---|---|---|---|---|---|---|---|---|
| | DN1 | DN2 | a | b | fM | g1 | h1 | h2 | HD | l1 | l2 | m1 | m2 | n1 | n2 | n3 | s1 | w | w5 | Weight |
| NMD 25/190C/B | G 1 1/2" | G 1" | 97 | 50 | 490 | 12 | 140 | 180 | 270 | 133 | 133 | 100 | 70 | 250 | 190 | 36 | 14 | 316 | 35 | 41.2 |
| NMD 25/190B/A | G 1 1/2" | G 1" | 97 | 50 | 505 | 12 | 140 | 180 | 280 | 133 | 133 | 100 | 70 | 250 | 190 | 34 | 14 | 304 | 35 | 48.3 |
| NMD 25/190A/B | G 1 1/2" | G 1" | 97 | 50 | 505 | 12 | 140 | 180 | 280 | 133 | 133 | 100 | 70 | 250 | 190 | 34 | 14 | 304 | 35 | 52.4 |
| BNMD 25/190C/B | G 1 1/2" | G 1" | 97 | 50 | 490 | 12 | 140 | 180 | 270 | 133 | 133 | 100 | 70 | 250 | 190 | 36 | 14 | 316 | 35 | 45 |
| BNMD 25/190B/A | G 1 1/2" | G 1" | 97 | 50 | 505 | 12 | 140 | 180 | 280 | 133 | 133 | 100 | 70 | 250 | 190 | 34 | 14 | 304 | 35 | 53.9 |
| BNMD 25/190A/B | G 1 1/2" | G 1" | 97 | 50 | 505 | 12 | 140 | 180 | 280 | 133 | 133 | 100 | 70 | 250 | 190 | 34 | 14 | 304 | 35 | 56.2 |
| NMD 40/180D/B | G 2" | G 1 1/2" | 121 | 50 | 535 | 12 | 150 | 215 | 290 | 145 | 145 | 100 | 70 | 265 | 212 | 35 | 14 | 310 | 41 | 59.3 |
| NMD 40/180C/A | G 2" | G 1 1/2" | 121 | 50 | 587 | 12 | 150 | 215 | 317 | 145 | 145 | 100 | 70 | 265 | 212 | 32 | 14 | 341 | 41 | 71.4 |
| NMD 40/180B/A | G 2" | G 1 1/2" | 121 | 50 | 587 | 12 | 150 | 215 | 317 | 145 | 145 | 100 | 70 | 265 | 212 | 32 | 14 | 341 | 41 | 75.2 |
| NMD 40/180A/B | G 2" | G 1 1/2" | 121 | 50 | 632 | 12 | 150 | 215 | 340 | 145 | 145 | 100 | 70 | 265 | 212 | 29 | 14 | 366 | 41 | 96.5 |

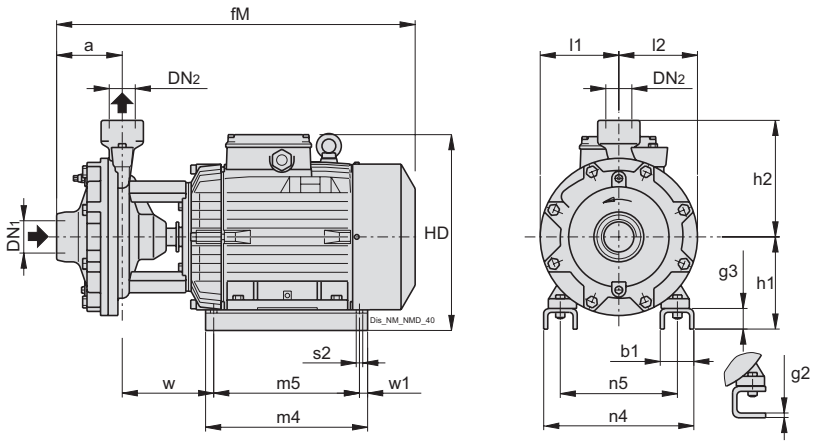


### Three-phase

| TYPE | ISO 228 | | mm | | | | | | | | | | | | | | | | | kg |
|---|---|---|---|---|---|---|---|---|---|---|---|---|---|---|---|---|---|---|---|---|
| | DN1 | DN2 | a | b1 | fM | g2 | g3 | h1 | h2 | HD | l1 | l2 | m4 | m5 | n4 | n5 | s2 | w | w1 | Weight |
| NMD 32/210D/B | G 2" | G 1 1/4" | 110 | 54 | 530 | 6 | - | 155 | 215 | 295 | 150 | 150 | 205 | 175 | 180 | 140 | 10 | 140 | 15 | 60.7 |
| NMD 32/210C/A | G 2" | G 1 1/4" | 110 | 68 | 583 | - | 38 | 150 | 215 | 312 | 150 | 150 | 280 | 250 | 258 | 190 | 12 | 139 | 15 | 71 |
| NMD 32/210B/A | G 2" | G 1 1/4" | 110 | 68 | 583 | - | 38 | 150 | 215 | 312 | 150 | 150 | 280 | 250 | 258 | 190 | 12 | 139 | 15 | 70 |
| NMD 32/210A/B | G 2" | G 1 1/4" | 110 | 70 | 627 | - | 38 | 170 | 215 | 360 | 150 | 150 | 298 | 268 | 286 | 216 | 12 | 152 | 15 | 97.5 |
| BNMD 32/210D/B | G 2" | G 1 1/4" | 110 | 54 | 530 | 6 | - | 155 | 215 | 295 | 150 | 150 | 205 | 175 | 180 | 140 | 10 | 140 | 15 | 64.8 |
| BNMD 32/210C/A | G 2" | G 1 1/4" | 110 | 68 | 583 | - | 38 | 150 | 215 | 312 | 150 | 150 | 280 | 250 | 258 | 190 | 12 | 139 | 15 | 77.2 |
| BNMD 32/210B/A | G 2" | G 1 1/4" | 110 | 68 | 583 | - | 38 | 150 | 215 | 312 | 150 | 150 | 280 | 250 | 258 | 190 | 12 | 139 | 15 | 81.5 |
| BNMD 32/210A/B | G 2" | G 1 1/4" | 110 | 70 | 627 | - | 38 | 170 | 215 | 360 | 150 | 150 | 298 | 268 | 286 | 216 | 12 | 152 | 15 | 103.1 |
| BNMD 40/180D/B | G 2" | G 1 1/2" | 121 | 54 | 535 | 6 | - | 155 | 215 | 295 | 145 | 145 | 205 | 175 | 180 | 140 | 10 | 134 | 15 | 66.8 |
| BNMD 40/180C/A | G 2" | G 1 1/2" | 121 | 68 | 588 | - | 38 | 150 | 215 | 312 | 145 | 145 | 280 | 250 | 258 | 190 | 12 | 133 | 15 | - |
| BNMD 40/180B/A | G 2" | G 1 1/2" | 121 | 68 | 588 | - | 38 | 150 | 215 | 312 | 145 | 145 | 280 | 250 | 258 | 190 | 12 | 133 | 15 | 82.6 |
| BNMD 40/180A/B | G 2" | G 1 1/2" | 121 | 70 | 632 | - | 38 | 170 | 215 | 360 | 145 | 145 | 298 | 268 | 286 | 216 | 12 | 146 | 15 | - |

# NM, NMS

BNM, BNM4 (close-coupled bronze version)

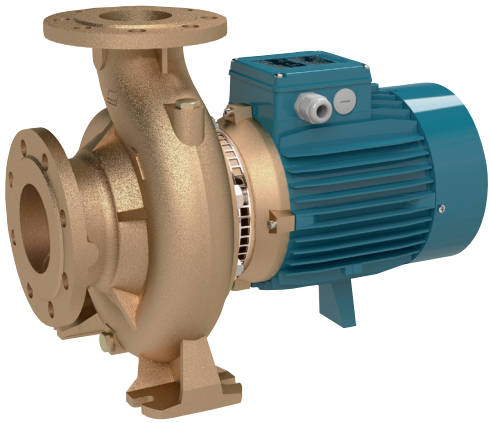

NM, NM4 ( close-coupled cast iron version)

NM EI, NM4 EI (close-coupled with I-MAT version)

NMS, NMS4 (Stub-shaft cast iron version)

BNMS, BNMS4 (Stub-shaft bronze version)

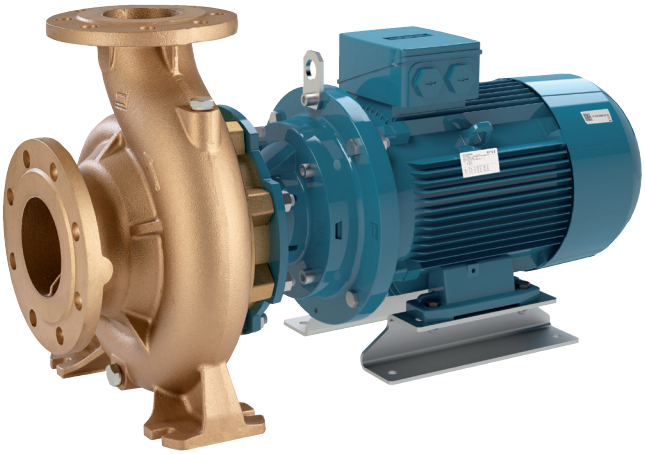

# Close coupled centrifugal pumps with flanged connections

# NM, NMS

## Construction

NM, NM4 Close-coupled centrifugal pumps; electric motor with extended shaft directly connected to the pump up to 22 kW (15 kW for NM4).

NMS, NMS4 Close-coupled centrifugal pumps, new bracket construction for standard motors (stub-shaft construction) with integrated thrust bearing.

Rated speed of rotation (50 Hz):
NM, NMS ≈ 2900 rpm.
NM4, NMS4 ≈ 1450 rpm.

Pump casing with axial suction and radial delivery on top, main dimensions and performance according to EN 733 with additional sizes for completion. (NMS4 80/400).
**NM(S), NM(S)4:** version with pump casing and lantern bracket in cast iron.
**BNM(S), BNM(S)4:** version with pump casing and lantern bracket/casing cover in bronze.
The pumps are supplied fully painted.
**Version with frequency converter (on request)**

**Connections:** Flanges PN 10-16, EN 1092-2 (PN 10 for DN 200)

**Counter-flanges** (on request)

| Sizes | Flanges |
|---|---|
| from NM, NM4 32/.. to NM, NM4 50/.. | Screwed flanges EN 1092-1, PN 16 |
| from NM, NM4 65/.. to NMS4 150/.. | Flanges for welding EN 1092-1, PN 10-16 (PN 10 for DN 200) |

## Applications

For clean liquids without abrasives, which are non-aggressive for the pump materials ( solids content up to 0.2%).
For water supply.
For heating, air-conditioning, cooling and circulation plants.
For civil and industrial applications.
For irrigation.

## Operating conditions

Liquid temperature from -10 °C to +90 °C.
Ambient temperature up to 40° C.
Total suction lift up to 7 m.
Maximum permissible working pressure up to 16 bar (10 bar for NM 32/12; NM,NM4 32/16,20; NM,NM4 40/25; NM,NM4 50/20,25; NM4 65/31; NM,NM4 100/25; NM4 100/315,400; NM4 125/250 and bronze version).
Continuous duty.

## Motor

2-pole induction motor, 50 Hz (n ≈ 2900 rpm).

**NM, NMS:** three-phase 230/400 V ± 10% up to 3 kW;
400/690 V ± 10% from 4 to 75 kW.

4-pole induction motor, 50 Hz (n ≈ 1450 rpm).

**NM4, NMS4:** three-phase 230/400 V ± 10% up to 3 kW;
400/690 V ± 10%, from 4 to 90 kW;

Insulation class F.
Protection IP 54 (IP 55 for NMS, NMS4).
Motor suitable for operation with frequency converter.
**Three-phase motors with efficiency class IE2 up to 0.65 kW, IE3 from 0.75 to 55 kW, IE4 from 75 kW.**
Constructed in accordance with: EN 60034-1; EN 60034-30-1.

## Special features on request

Other voltages.
Impeller in chrome-nickel stainless steel AISI 316 for: from 32/... to 80/...
Frequency 60 Hz (as per 60 Hz data sheet).
Protection IP 55.
Special mechanical seal
IE4 efficiency class for three-phase motors
Single-phase motor (NMM) up to 1,8 kW.
Higher or lower liquid or ambient temperatures.

## Designation

Example: BNM(S) EI 32/16A/B
B = Bronze version (no indication: the pump is in the Cast Iron version)
NM = Series
S = Series Version Stub-Shaft
EI = With frequency converter I-MAT
32 = Delivery port diameter in mm
16 = Nominal impeller diameter
A = Impeller size
/B = It refers to a revision

**The electropumps comply with the European Regulation no. 547/2012.**

## Materials

| Components | NM, NM4, NMS, NMS4 | BNM, BNM4, BNMS, BNMS4 |
|---|---|---|
| Pump casing | Cast iron GJL 250 EN 1561 for PN 10<br>Cast iron GJS 400-15 EN 1563 for PN 16 | Bronze CC480K EN 1982 |
| Lantern bracket NM | Cast iron GJL 200 EN 1561 | Bronze CC480K EN 1982 |
| Casing cover for NMS(4) | Cast iron GJL 200 EN 1561 | Bronze CC480K EN 1982 |
| Lantern bracket NMS(4) | Cast iron GJL 200 EN 1561 | Cast iron GJL 200 EN 1561 |
| Impeller | Cast iron GJL 200 EN 1561 | Bronze CC480K EN 1982 |
| | Cast iron GJL 250 EN 1561<br>For .. 65/315; 80/315,400; 100/315,400; 125/315,400; 150/315,400 | |
| | Brass CW617N EN 12167<br>For .. 32/12-16-20, .. NM 40/20 | Brass CW617N EN 12167<br>For .. 32/12-16-20, .. NM 40/20 |
| Shaft | Chrome-nickel steel 1.4305 EN 10088 (AISI 303) | Stainless Steel 1.4401 EN 10088 (AISI 316) |
| | Steel 1.4401 EN 10088 AISI 316 (NMS, NMS4) | |
| | Steel 1.4462 EN 10088 (AISI 2205) for NMS4150/400S | Steel 1.4462 EN 10088 (AISI 2205) for BNMS4150/400S |
| Mechanical seal | Carbon - Ceramic - NBR | Carbon - Ceramic - NBR |
| Counter-flanges | Steel 1.0044 EN 10025-2 (Fe 430B) | Steel 1.0044 EN 10025-2 (Fe 430B) |

# NM, NMS

## EI: Pumps with frequency converter

The NM(4) EI pumps are available with power ranging from 0.37 kW to 37 kW. These pumps are equipped with the I-MAT system installed on board, enabling the creation of an extremely compact and efficient variable-speed system. This makes them ideal for water supply applications and the distribution of hot and cold water. The pump is fitted with transducers suitable for operation and is pre-programmed at the factory for ease of use.

## Features

- Energy saving
- Compact design
- Easy to use
- Programmable to suit the system requirements
- Reliability

## Construction

The system consists of:
- Pump
- Induction motor
- I-MAT Frequency converter
- Motor adapter for the motor mounting of the frequency converter
- Connection cable between frequency converter and induction motor
- Single pressure transducer for 2 poles and differential transducer for 4 poles

## Main features

Rated motor power output from 0,37 kW to 37 kW.
Control range from 1750 to 2900 rpm (2-pole)
Control range 870÷1750 1/rpm (4-pole)
Protection against dry running
Protection against operations with closed valve ports
Protection against  system leakages
Protection against overcurrent in the motor
Protection agains overvoltage and undervoltage of the power supply
Protection against current unbalances between phases

## Operating modes

**Constant pressure mode**
with pressure transducer
In this mode, the system maintains the preset pressure regardless of changes in the flow demand of the installation.

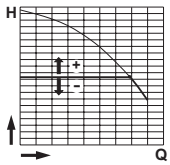


**Proportional pressure mode**
with pressure transducer
In this mode the system changes the working pressure according to the required flow rate.

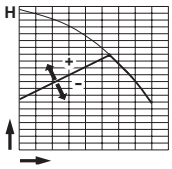


**Constant flow mode**
with flow meter
In this mode, the system maintains a constant flow rate at a specific point in the installation, adjusted according to the required pressure.

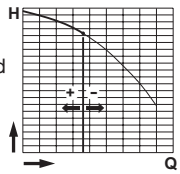


**Fixed speed mode**
with setting of the speed preferential rotation.
In this mode, by changing the working frequency, you may choose any operational curve included within the working range.

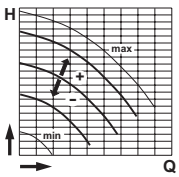


**Constant temperature mode**
with temperature transducer
In this mode the system keeps the temperature constant inside a system by changing the speed of the pump.

## Coverage chart n ≈ 2900 rpm

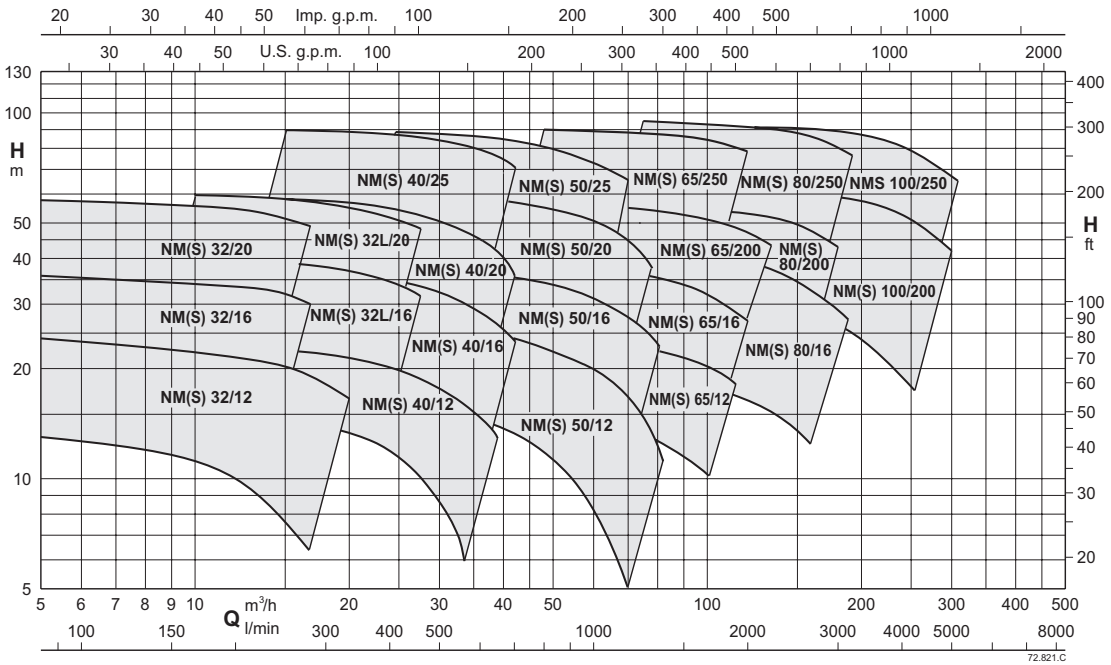


## Coverage chart n ≈ 2900 rpm

### Three-phase

| | | | | | | | Q = Flow | | | | | | | | | | | | |
|---|---|---|---|---|---|---|---|---|---|---|---|---|---|---|---|---|---|---|---|
| | | | | | | | m³/h | 0 | 6,6 | 7,5 | 8,4 | 9,6 | 10,8 | 12 | 13,2 | 15 | 16,8 | 18,9 | 21 | 24 |
| Model | | 230V | 400V | 690V | P2 | | l/min | | 110 | 125 | 140 | 160 | 180 | 200 | 220 | 250 | 280 | 315 | 350 | 400 |
| | | A | | | kW | HP | H (m) = Total head | | | | | | | | | | | | | |
| BNM | NM 32/12F | 4 | 2,3 | - | 0,55 | 0,75 | | 13,2 | 12,5 | 12,5 | 12 | 11,5 | 11 | 10 | 9 | 7,5 | - | - | - | - |
| BNM | NM 32/12D | 4 | 2,3 | - | 0,75 | 1 | | 18,4 | 18 | 17,8 | 17,5 | 17,1 | 16,6 | 16 | 15,3 | 14,1 | - | - | - | - |
| BNM | NM 32/12A/A | 4,6 | 2,7 | - | 1,1 | 1,5 | | 23,5 | 23 | 22,8 | 22,5 | 22,1 | 21,6 | 21,1 | 20,4 | 19,3 | - | - | - | - |
| BNM | NM 32/12S/A | 7,5 | 4,3 | - | 1,5 | 2 | | 24 | 23,6 | 23,2 | 22,8 | 22,4 | 22 | 21,6 | 21,1 | 20,4 | 19,5 | 18,1 | 16,4 | 13,1 |
| BNM | NM 32/16B/A | 7,5 | 4,3 | - | 1,5 | 2 | | 30 | 29,5 | 29,5 | 29 | 28,5 | 27,5 | 27 | 26 | 25 | 22,5 | - | - | - |
| BNM | NM 32/16A/B | 9,2 | 5,3 | - | 2,2 | 3 | | 36 | 35,5 | 35,2 | 34,9 | 34,5 | 34,1 | 33,6 | 33 | 31,8 | 30,1 | - | - | - |
| BNM | NM 32/20D/B | 9,2 | 5,3 | - | 2,2 | 3 | | 41 | 37,5 | 36,7 | 35,9 | 35 | 34,1 | 33,1 | 32 | - | - | - | - | - |
| BNM | NM 32/20C/A | 11,5 | 6,6 | - | 3 | 4 | | 46,4 | 44,5 | 44 | 43,5 | 42,8 | 42 | 41,2 | 40,2 | 38,3 | 35,9 | - | - | - |
| BNM | NM 32/20A/B | - | 9,6 | 5,5 | 4 | 5,5 | | 58,6 | 57 | 56,5 | 56 | 55,3 | 54,5 | 53,6 | 52,6 | 50,9 | 48,9 | - | - | - |

### Three-phase

| | | | | | | | Q = Flow | | | | | | | | | | | | |
|---|---|---|---|---|---|---|---|---|---|---|---|---|---|---|---|---|---|---|---|
| | | | | | | | m³/h | 0 | 9,6 | 10,8 | 12 | 13,2 | 15 | 16,8 | 18,9 | 21 | 24 | 27 | 29 | 32 |
| Model | | 230V | 400V | 690V | P2 | | l/min | | 160 | 180 | 200 | 220 | 250 | 280 | 315 | 350 | 400 | 450 | 483 | 533 |
| | | A | | | kW | HP | H (m) = Total head | | | | | | | | | | | | | |
| BNM | NM 32L/16C | 9,2 | 5,3 | - | 2,2 | 3 | | 25 | 25,1 | 24,9 | 24,7 | 24,4 | 23,8 | 23 | 21,8 | 20,3 | 17,3 | 13,4 | - | - |
| BNM | NM 32L/16B | 11,5 | 6,6 | - | 3 | 4 | | 30 | 30,4 | 30,3 | 30,2 | 30 | 29,6 | 29 | 28,1 | 26,8 | 24,2 | 20,8 | 17,9 | - |
| BNM | NM 32L/16A | - | 9,6 | 5,5 | 4 | 5,5 | | 38 | 39,9 | 39,9 | 39,8 | 39,6 | 39,3 | 38,8 | 37,9 | 36,8 | 34,7 | 31,9 | 29,7 | 25,6 |
| BNM | NM 32L/20C | - | 9,6 | 5,5 | 4 | 5,5 | | 43 | 42,1 | 41,9 | 41,5 | 41,1 | 40,1 | 38,9 | 37 | 34,5 | 29,8 | 23,8 | - | - |
| BNM | NM 32L/20B | - | 10,8 | 6,2 | 5,5 | 7,5 | | 52 | 51,7 | 51,6 | 51,4 | 51,2 | 50,7 | 50 | 48,7 | 46,9 | 43,2 | 37,9 | 33,4 | - |
| BNM | NM 32L/20A | - | 14,3 | 8,3 | 7,5 | 10 | | 59 | 59,4 | 59,5 | 59,5 | 59,5 | 59,3 | 58,8 | 57,9 | 56,4 | 53,3 | 48,8 | 44,9 | 37,5 |

**P2:** Rated motor power output.
**H:** Total head in m
Tolerances according to UNI EN ISO 9906:2012

## Coverage chart n ≈ 2900 rpm

### Three-phase

| | | | | | | | Q = Flow | | | | | | | | | | | | | | |
|---|---|---|---|---|---|---|---|---|---|---|---|---|---|---|---|---|---|---|---|---|---|
| | | | | | | | m³/h | 0 | 15 | 16,8 | 18,9 | 21 | 24 | 27 | 30 | 33 | 37,8 | 39 | 42 | 45 | 48 |
| Model | | 230V | 400V | 690V | P2 | | l/min | | 250 | 280 | 315 | 350 | 400 | 450 | 500 | 550 | 630 | 650 | 700 | 750 | 800 |
| | | A | | | kW | HP | H (m) = Total head | | | | | | | | | | | | | | |
| BNM | NM 40/12F/B | 4,6 | 2,7 | - | 1,1 | 1,5 | | 14 | 14 | 13,5 | 12,9 | 12,1 | 11 | 9,6 | 7,9 | 6 | - | - | - | - | - |
| BNM | NM 40/12C/B | 7,5 | 4,3 | - | 1,5 | 2 | | 17 | 17,5 | 17,1 | 16,6 | 15,9 | 14,9 | 13,6 | 12,1 | 10,4 | 7,4 | 6,6 | - | - | - |
| BNM | NM 40/12A/C | 9,2 | 5,3 | - | 2,2 | 3 | | 21,8 | 22 | 21,8 | 21,5 | 21 | 20,1 | 19,1 | 17,9 | 16,4 | 13,9 | 13,2 | 11,4 | - | - |
| BNM | NM 40/16C/C | 9,2 | 5,3 | - | 2,2 | 3 | | 23 | 23 | 22,7 | 22,1 | 21,4 | 20 | 18,4 | 16,6 | 14,5 | 11 | 10 | - | - | - |
| BNM | NM 40/16B/B | 11,5 | 6,6 | - | 3 | 4 | | 28 | 29 | 28,6 | 28,1 | 27,5 | 26,4 | 25,1 | 23,5 | 21,6 | 18 | 16,9 | 14,1 | - | - |
| BNM | NM 40/16A/C | - | 9,6 | 5,5 | 4 | 5,5 | | 36 | 37 | 36,7 | 36,4 | 35,8 | 34,9 | 33,7 | 32,2 | 30,4 | 27 | 26 | 23,3 | 20,3 | 16,9 |
| BNM | NM 40/20D/B | - | 9,6 | 5,5 | 4 | 5,5 | | 42 | 39 | 38,1 | 37 | 35,6 | 33,3 | 30,5 | 26,9 | 22,7 | 14 | - | - | - | - |
| BNM | NM 40/20C/B | - | 9,6 | 5,5 | 4 | 5,5 | | 43,5 | 41,5 | 40,6 | 39,4 | 38,1 | 36 | 33,5 | - | - | - | - | - | - | - |
| BNM | NM 40/20B/A | - | 10,8 | 6,2 | 5,5 | 7,5 | | 51 | 50 | 49,3 | 48,4 | 47,4 | 45,8 | 43,7 | 41 | 37,7 | 30,5 | - | - | - | - |
| BNM | NM 40/20AR/A | - | 10,8 | 6,2 | 5,5 | 7,5 | | 55 | 55 | 54,7 | 53,9 | 52,9 | 51,1 | 49 | - | - | - | - | - | - | - |
| BNM | NM 40/20A/A | - | 14,3 | 8,3 | 7,5 | 10 | | 57,5 | 57,5 | 57 | 56,3 | 55,5 | 54,3 | 52,7 | 50,7 | 48 | 42,2 | 40,4 | 35,2 | - | - |
| BNM | NM 40/25C/C | - | 18,5 | 10,7 | 9,2 | 12,5 | | 62 | 61 | 60,9 | 60,6 | 59,9 | 58,4 | 56,2 | 53,3 | 49,6 | 42 | 39,7 | 33,4 | - | - |
| BNM | NM 40/25B/C | - | 21,5 | 12,4 | 11 | 15 | | 70 | 69,5 | 69,3 | 68,9 | 68,4 | 67,3 | 65,7 | 63,4 | 60,3 | 53,4 | 51,2 | 44,9 | - | - |
| BNM | NM 40/25A/C | - | 27,3 | 15,8 | 15 | 20 | | 90 | 90 | 89,8 | 89,5 | 89,1 | 88,3 | 87,1 | 85,3 | 82,9 | 77,5 | 75,7 | 70,7 | - | - |

### Three-phase

| | | | | | | | Q = Flow | | | | | | | | | | | | | | |
|---|---|---|---|---|---|---|---|---|---|---|---|---|---|---|---|---|---|---|---|---|---|
| | | | | | | | m³/h | 0 | 24 | 27 | 30 | 33 | 37,8 | 42 | 48 | 54 | 60 | 66 | 69 | 72 | 75 | 78 | 81 |
| Model | | 230V | 400V | 690V | P2 | | l/min | | 400 | 450 | 500 | 550 | 630 | 700 | 800 | 900 | 1000 | 1100 | 1150 | 1200 | 1250 | 1300 | 1350 |
| | | A | | | kW | HP | H (m) = Total head | | | | | | | | | | | | | | | | |
| BNM | NM 50/12F/C | 9,2 | 5,3 | - | 2,2 | 3 | | 16,5 | - | - | 15,5 | 15,1 | 14,2 | 13,3 | 11,8 | 10,1 | 8,1 | 5,9 | - | - | - | - | - |
| BNM | NM 50/12D/B | 11,5 | 6,6 | - | 3 | 4 | | 20,5 | - | - | 20 | 19,5 | 18,7 | 17,8 | 16,4 | 14,7 | 12,8 | 10,5 | 9,2 | 7,9 | - | - | - |
| BNM | NM 50/12A/C | - | 9,6 | 5,5 | 4 | 5,5 | | 24,5 | - | - | 24 | 23,8 | 23,2 | 22,5 | 21,1 | 19,4 | 17,4 | 15,1 | 13,9 | 12,7 | 11,4 | 10 | - |
| BNM | NM 50/12S/C | - | 9,6 | 5,5 | 4 | 5,5 | | 27 | - | - | 26,5 | 26,1 | 25,4 | 24,7 | 23,4 | 21,9 | 20 | 17,9 | 16,7 | 15,5 | 14,1 | 12,7 | 11,1 |
| BNM | NM 50/16B/B | - | 10,8 | 6,2 | 5,5 | 7,5 | | 30,5 | - | - | 31 | 30,3 | 29,2 | 28 | 26,2 | 24,1 | 21,7 | 18,8 | 17,2 | 15,5 | 13,6 | 11,6 | 9,5 |
| BNM | NM 50/16A/B | - | 14,3 | 8,3 | 7,5 | 10 | | 38 | - | - | 38,5 | 38,2 | 37,4 | 36,4 | 34,7 | 32,5 | 29,9 | 27,1 | 25,5 | 24 | 22,3 | 20,7 | 19 |
| BNM | NM 50/20B/C | - | 18,5 | 10,7 | 9,2 | 12,5 | | 48 | 48 | 47,7 | 47,3 | 46,8 | 45,7 | 44,6 | 42,6 | 40 | 36,7 | 32,9 | 30,6 | 28,2 | 25,6 | 22,8 | - |
| BNM | NM 50/20A/C | - | 21,5 | 12,4 | 11 | 15 | | 54 | 55 | 54,9 | 54,6 | 54,2 | 53,3 | 52,3 | 50,3 | 47,9 | 44,9 | 41,4 | 39,4 | 37,2 | 35 | 32,5 | - |
| BNM | NM 50/20S/C | - | 27,3 | 15,8 | 15 | 20 | | 58 | 60 | 59,8 | 59,6 | 59,2 | 58,4 | 57,5 | 55,8 | 53,5 | 50,6 | 47 | 45 | 42,7 | 40,2 | 37,5 | - |
| BNM | NM 50/25C/C | - | 21,5 | 12,4 | 11 | 15 | | 55,5 | 55 | 54,5 | 53,9 | 53,1 | 51,4 | 49,5 | 46 | 41,4 | 35,6 | 28,5 | 24,5 | - | - | - | - |
| BNM | NM 50/25B/C | - | 27,3 | 15,8 | 15 | 20 | | 68 | 69 | 68,6 | 68 | 67,3 | 65,8 | 64,2 | 61,1 | 57,1 | 52,3 | 46,4 | 43,1 | - | - | - | - |
| BNM | NM 50/25A/D | - | 34 | 19,6 | 18,5 | 25 | | 80 | 80,5 | 80,3 | 80 | 79,5 | 78,4 | 77,1 | 74,6 | 71,3 | 67 | 61,6 | 58,5 | - | - | - | - |
| BNM | NM 50/25S | - | 41 | 23,7 | 22 | 30 | | 88 | 88,5 | 88,5 | 88 | 87 | 86 | 84 | 81,5 | 78,5 | 75 | 71 | 68,5 | - | - | - | - |

**P2:** Rated motor power output.
**H:** Total head in m
Tolerances according to UNI EN ISO 9906:2012

# NM

calpeda®

## Coverage chart n ≈ 2900 rpm

### Three-phase

| | | | | | | Q = Flow | | | | | | | | | | | | | | |
|---|---|---|---|---|---|---|---|---|---|---|---|---|---|---|---|---|---|---|---|---|
| | | | | | | m³/h | 0 | 37,8 | 42 | 48 | 54 | 60 | 66 | 75 | 84 | 96 | 108 | 120 | 132 | 141 |
| Model | | 400V | 690V | P2 | | l/min | | 630 | 700 | 800 | 900 | 1000 | 1100 | 1250 | 1400 | 1600 | 1800 | 2000 | 2200 | 2350 |
| | | A | | kW | HP | | H (m) = Total head | | | | | | | | | | | | | |
| BNM | NM 65/12E/C | 9,6 | 5,5 | 4 | 5,5 | | 16,5 | 16,5 | 16,4 | 16,2 | 15,9 | 15,5 | 15,1 | 14,3 | 13,2 | 11,4 | 9,2 | - | - | - |
| BNM | NM 65/12C/B | 10,8 | 6,2 | 5,5 | 7,5 | | 20,5 | 21,1 | 21 | 20,8 | 20,6 | 20,3 | 19,9 | 19,1 | 18,2 | 16,5 | 14,4 | 11,8 | - | - |
| BNM | NM 65/12A/B | 14,3 | 8,3 | 7,5 | 10 | | 25,5 | 25,9 | 25,8 | 25,6 | 25,4 | 25,1 | 24,8 | 24,1 | 23,3 | 21,9 | 20 | 17,6 | - | - |
| BNM | NM 65/16D/B | 14,3 | 8,3 | 7,5 | 10 | | 24 | - | - | 24,3 | 24,1 | 23,9 | 23,6 | 23,1 | 22,3 | 20,8 | 18,8 | 16,3 | - | - |
| BNM | NM 65/16C/C | 18,5 | 10,7 | 9,2 | 12,5 | | 26,5 | - | - | 28,1 | 28 | 27,8 | 27,6 | 27,1 | 26,3 | 24,9 | 23,1 | 20,7 | 17,7 | - |
| BNM | NM 65/16B/C | 21,5 | 12,4 | 11 | 15 | | 31,8 | - | - | 32,6 | 32,5 | 32,3 | 32 | 31,5 | 30,8 | 29,5 | 27,9 | 25,7 | 23 | - |
| BNM | NM 65/16AR | 27,3 | 15,8 | 15 | 20 | | 35,5 | - | - | 36,4 | 36,3 | 36,2 | 35,9 | 35,5 | 34,8 | 33,7 | 32,1 | 30 | 27,5 | - |
| BNM | NM 65/16A/C | 27,3 | 15,8 | 15 | 20 | | 39 | - | - | 40,5 | 40,4 | 40,2 | 40 | 39,5 | 38,8 | 37,6 | 36,1 | 34,1 | 31,7 | - |
| BNM | NM 65/20C/C | 27,3 | 15,8 | 15 | 20 | | 41 | - | - | 44 | 43,8 | 43,5 | 43,1 | 42,3 | 41,2 | 39,4 | 37,1 | 34,4 | 31,4 | 28,8 |
| - | NM 65/20B/D | 34 | 19,6 | 18,5 | 25 | | 47 | - | - | 50,5 | 50,4 | 50,2 | 49,9 | 49,2 | 48,3 | 46,8 | 44,8 | 42,5 | 39,8 | 37,5 |
| - | NM 65/20A/A | 41 | 23,7 | 22 | 30 | | 54 | - | - | 57 | 57 | 56,9 | 56,6 | 56,1 | 55,4 | 54 | 52,3 | 50,1 | 47,6 | 45,4 |
| BNM | NM 65/25C/A | 41 | 23,7 | 22 | 30 | | 56 | - | - | 61 | 60,8 | 60,4 | 59,8 | 58,7 | 57,2 | 54,6 | 51,3 | 47,5 | 43 | - |
| BNMS | NMS 65/250B/B | - | - | 30 | 40 | | 68 | - | - | 73,5 | 73,7 | 73,7 | 73,5 | 72,8 | 71,6 | 69,4 | 66,6 | 63,1 | 59 | - |
| BNMS | NMS 65/250A/B | - | - | 37 | 50 | | 80 | - | - | 86,5 | 86,7 | 86,8 | 86,7 | 86,1 | 85,2 | 83,5 | 81,1 | 78,1 | 74,5 | - |

### Three-phase

| | | | | | | Q = Flow | | | | | | | | | | | | | | |
|---|---|---|---|---|---|---|---|---|---|---|---|---|---|---|---|---|---|---|---|---|
| | | | | | | m³/h | 0 | 75 | 84 | 96 | 108 | 120 | 132 | 150 | 168 | 180 | 192 | 210 | 240 | 270 | 300 |
| Model | | 400V | 690V | P2 | | l/min | | 1250 | 1400 | 1600 | 1800 | 2000 | 2200 | 2500 | 2800 | 3000 | 3200 | 3500 | 4000 | 4500 | 5000 |
| | | A | | kW | HP | | H (m) = Total head | | | | | | | | | | | | | |
| BNM | NM 80/16E/B | 14,3 | 8,3 | 7,5 | 10 | | 24 | 21,5 | 20,9 | 19,9 | 18,7 | 17,4 | 15,9 | 13,4 | 10,6 | - | - | - | - | - | - |
| BNM | NM 80/16D/C | 18,5 | 10,7 | 9,2 | 12,5 | | 26 | 25,2 | 24,5 | 23,5 | 22,4 | 21,1 | 19,6 | 17,2 | 14,4 | - | - | - | - | - | - |
| BNM | NM 80/16C/C | 22,4 | 12,9 | 11 | 15 | | 28 | 28,7 | 28,2 | 27,4 | 26,4 | 25,2 | 23,8 | 21,3 | 18,5 | 16,4 | - | - | - | - | - |
| BNM | NM 80/16B/C | 27,3 | 15,8 | 15 | 20 | | 35 | 34,8 | 34,4 | 33,8 | 33 | 32,1 | 30,9 | 28,9 | 26,4 | 24,5 | 22,4 | - | - | - | - |
| BNM | NM 80/16A/D | 34 | 19,6 | 18,5 | 25 | | 40 | 39,9 | 39,5 | 39 | 38,3 | 37,4 | 36,4 | 34,5 | 32,2 | 30,3 | 28,1 | - | - | - | - |
| - | NM 80/20B/A | 41 | 23,7 | 22 | 30 | | 42 | 44,4 | 43,9 | 43,2 | 42,4 | 41,5 | 40,5 | 38,6 | 36,4 | 34,6 | 32,5 | - | - | - | - |
| BNMS | NMS 80/200A/B | - | - | 30 | 40 | | 54,4 | 56,6 | 56,3 | 55,8 | 55,2 | 54,4 | 53,5 | 51,7 | 49,4 | 47,7 | 45,6 | - | - | - | - |
| - | NM 80/25E | 41 | 23,7 | 22 | 30 | | 52 | 51 | 50 | 48,4 | 46,6 | 44,5 | 42,1 | 37,9 | 32,9 | 29,1 | - | - | - | - | - |
| BNMS | NMS 80/250D/A | - | - | 30 | 40 | | 65 | 65 | 63,9 | 62,4 | 60,8 | 58,9 | 56,9 | 53,2 | 48,7 | 45,2 | 41,2 | - | - | - | - |
| BNMS | NMS 80/250C/A | - | - | 37 | 50 | | 74 | 73,5 | 72,9 | 71,9 | 70,6 | 68,9 | 66,9 | 63,3 | 58,8 | 55,4 | 51,6 | - | - | - | - |
| BNMS | NMS 80/250B/A | - | - | 45 | 60 | | 84 | 84 | 83,5 | 82,6 | 81,4 | 79,9 | 78,1 | 74,7 | 70,4 | 66,9 | 63,1 | - | - | - | - |
| BNMS | NMS 80/250A/A | - | - | 55 | 75 | | 95 | 95 | 94,3 | 93,4 | 92,5 | 91,5 | 90,2 | 87,5 | 83,8 | 80,5 | 76,5 | - | - | - | - |
| - | NM 100/20E/A | 34 | 19,6 | 18,5 | 25 | | 30 | - | - | - | 33 | 32,8 | 32,3 | 31,1 | 29,5 | 28,1 | 26,6 | 24 | 19,1 | - | - |
| - | NM 100/20D | 41 | 23,7 | 22 | 30 | | 36 | - | - | - | 38,8 | 38,4 | 37,9 | 36,8 | 35,2 | 33,8 | 32,2 | 29,3 | 23,8 | - | - |
| BNMS | NMS 100/200C/A | - | - | 30 | 40 | | 45,5 | - | - | - | 45 | 44,6 | 44,2 | 43,4 | 42,4 | 41,6 | 40,5 | 38,7 | 34,6 | 29,1 | 21,9 |
| BNMS | NMS 100/200B/A | - | - | 37 | 50 | | 54,2 | - | - | - | 54 | 53,6 | 53,2 | 52,4 | 51,4 | 50,6 | 49,6 | 47,8 | 43,9 | 38,7 | 31,9 |
| BNMS | NMS 100/200A/A | - | - | 45 | 60 | | 62 | - | - | - | 61,5 | 61,1 | 60,8 | 60,1 | 59,3 | 58,6 | 57,8 | 56,4 | 53 | 48,3 | 41,9 |
| BNMS | NMS 100/250B/A | - | - | 55 | 75 | | 74 | - | - | - | 73,5 | 73 | 72,4 | 71,2 | 69,8 | 68,7 | 67,4 | 65,2 | 60,8 | 55,3 | 48,6 |
| BNMS | NMS 100/250A/A | - | - | 75 | 100 | | 92 | - | - | - | 91 | 90,6 | 90,2 | 89,5 | 88,6 | 87,8 | 86,9 | 85,1 | 81 | 75,1 | 66,9 |

**P2:** Rated motor power output.
**H:** Total head in m
Tolerances according to UNI EN ISO 9906:2012

## Coverage chart n ≈ 2900 rpm

### Rated current

| Motor | IE3 | | | IE4 | | |
|---|---|---|---|---|---|---|
| P2 | 400V | 690V | | 400V | 690V | |
| kW | A | A | Ia/In | A | A | Ia/In |
| 0.55 | 2.3 | - | 4.8 | 2.3 | - | 4.8 |
| 0.75 | 2.3 | - | 6.1 | 2.3 | - | 6.1 |
| 1.1 | 2.7 | - | 5.5 | 2.7 | - | 5.5 |
| 1.5 | 4.3 | - | 6.1 | 4.3 | - | 6.1 |
| 2.2 | 5.3 | - | 8.4 | 5.3 | - | 8.4 |
| 3 | 6.6 | - | 8.2 | 6.6 | - | 8.2 |
| 4 | 9.6 | 5.5 | 8.9 | 7.3 | 4.2 | 7.5 |
| 5.5 | 10.8 | 6.2 | 9.1 | 10.8 | 6.2 | 9.1 |
| 7.5 | 14.3 | 8.3 | 9.1 | 13.4 | 7.8 | 7.5 |
| 9.2 | 18.5 | 10.7 | 8.2 | 18.5 | 10.7 | 8.2 |
| 11 | 21.5 | 12.4 | 8.5 | 21.5 | 12.4 | 8.5 |
| 15 | 27.3 | 15.8 | 9.5 | 27.3 | 15.8 | 9.5 |
| 18.5 | 34 | 19.6 | 9.5 | 34 | 19.6 | 9.5 |
| 22 | 41 | 23.7 | 9.5 | 38 | 22 | 9.5 |
| 30 | 53 | 30.5 | 8.6 | 51.5 | 29.9 | 9 |
| 37 | 65 | 37.5 | 7.1 | 63.3 | 36.7 | 9 |
| 45 | 78 | 45 | 6.9 | 76.8 | 44.5 | 9 |
| 55 | 95 | 55 | 6.7 | 93.6 | 54.3 | 9 |
| 75 | 128 | 74 | 6.8 | 127.2 | 73.7 | 8.5 |

**A*:** Calpeda motor Standard
**Ia/In** D.O.L. starting current / Nominal current

# NMS

## Coverage chart n ≈ 2900 rpm

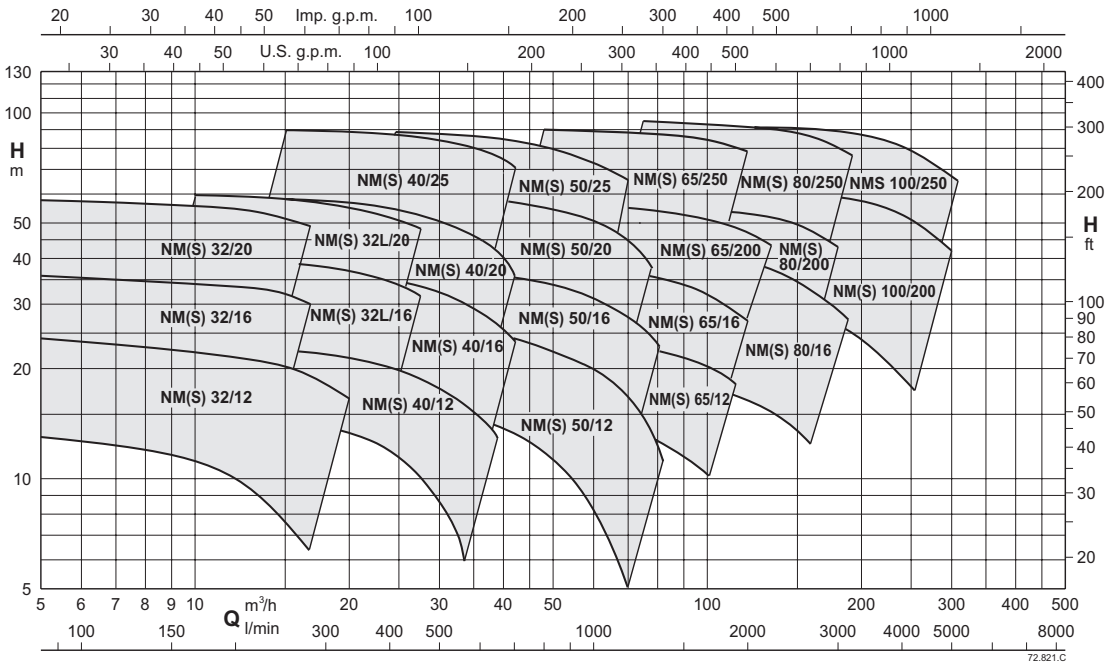


## Coverage chart n ≈ 2900 rpm

### Three-phase

| | | | | Q = Flow | | | | | | | | | | | | | | |
|---|---|---|---|---|---|---|---|---|---|---|---|---|---|---|---|---|---|---|
| | | | | m³/h | 0 | 6,6 | 7,5 | 8,4 | 9,6 | 10,8 | 12 | 13,2 | 15 | 16,8 | 18,9 | 21 | 24 | 27 |
| Model | | P2 | | l/min | | 110 | 125 | 140 | 160 | 180 | 200 | 220 | 250 | 280 | 315 | 350 | 400 | 450 |
| | | kW | HP | H (m) = Total head | | | | | | | | | | | | | | |
| BNMS | NMS 32/125D | 0,75 | 1 | | 18,4 | 18 | 17,8 | 17,5 | 17,1 | - | - | - | - | - | - | - | - | - |
| BNMS | NMS 32/125D-S | 1,1 | 1,5 | | 18,4 | 18 | 17,8 | 17,5 | 17,1 | 16,6 | 16 | 15,3 | 14,1 | 12,7 | 10,8 | 8,6 | - | - |
| BNMS | NMS 32/125A | 1,1 | 1,5 | | 24,3 | 23 | 22,8 | 22,5 | 22,1 | 21,6 | 21,1 | 20,4 | - | - | - | - | - | - |
| BNMS | NMS 32/125A-S | 1,5 | 2 | | 24,3 | 23 | 22,8 | 22,5 | 22,1 | 21,6 | 21,1 | 20,4 | 19,3 | 18 | 16,2 | 13,9 | 10 | - |
| BNMS | NMS 32/125S | 1,5 | 2 | | 25 | 23,6 | 23,2 | 22,8 | 22,4 | 22 | 21,6 | 21,1 | 20,4 | 19,5 | 18,1 | 16,4 | 13,1 | - |
| BNMS | NMS 32/160B | 1,5 | 2 | | 29,3 | 29,5 | 29,3 | 29 | 28,4 | 27,8 | 27 | 26,1 | 24,5 | - | - | - | - | - |
| BNMS | NMS 32/160B-S | 2,2 | 3 | | 31,8 | 29,5 | 29,3 | 29 | 28,4 | 27,8 | 27 | 26,1 | 24,5 | 22,7 | 20,2 | 17,3 | 12,5 | - |
| BNMS | NMS 32/160A | 2,2 | 3 | | 36 | 35,5 | 35,2 | 34,9 | 34,5 | 34,1 | 33,6 | 33 | 31,8 | 30,1 | - | - | - | - |
| BNMS | NMS 32/160A-S | 3 | 4 | | 36 | 35,5 | 35,2 | 34,9 | 34,5 | 34,1 | 33,6 | 33 | 31,8 | 30,1 | 28 | 25,3 | 20,8 | 15 |
| BNMS | NMS 32/200D | 2,2 | 3 | | 41 | 37,5 | 36,7 | 35,9 | 35 | 34,1 | - | - | - | - | - | - | - | - |
| BNMS | NMS 32/200D-S | 3 | 4 | | 41 | 37,5 | 36,7 | 35,9 | 35 | 34,1 | 33,1 | 32 | 29,9 | 26,9 | 22,1 | - | - | - |
| BNMS | NMS 32/200C | 3 | 4 | | 46,1 | 44,5 | 44 | 43,5 | 42,8 | 42 | 41,2 | 40,2 | 38,3 | 35,9 | 32,1 | - | - | - |
| BNMS | NMS 32/200A | 4 | 5,5 | | 58,7 | 57 | 56,5 | 56 | 55,3 | 54,5 | 53,6 | 52,6 | 50,9 | - | - | - | - | - |
| BNMS | NMS 32/200A-S | 5,5 | 7,5 | | 58,7 | 57 | 56,5 | 56 | 55,3 | 54,5 | 53,6 | 52,6 | 50,9 | 48,9 | 46,1 | - | - | - |

### Three-phase

| | | | | Q = Flow | | | | | | | | | | | | | |
|---|---|---|---|---|---|---|---|---|---|---|---|---|---|---|---|---|---|
| | | | | m³/h | 0 | 9,6 | 10,8 | 12 | 13,2 | 15 | 16,8 | 18,9 | 21 | 24 | 27 | 29 | 32 |
| Model | | P2 | | l/min | | 160 | 180 | 200 | 220 | 250 | 280 | 315 | 350 | 400 | 450 | 483 | 533 |
| | | kW | HP | H (m) = Total head | | | | | | | | | | | | | |
| BNMS | NMS 32L/160C | 2,2 | 3 | | 25,7 | 25,1 | 24,9 | 24,7 | 24,4 | 23,8 | 23 | 21,8 | 20,3 | 17,3 | 13,4 | - | - |
| BNMS | NMS 32L/160B | 3 | 4 | | 30,4 | 30,4 | 30,3 | 30,2 | 30 | 29,6 | 29 | 28,1 | 26,8 | 24,2 | 20,8 | 17,9 | - |
| BNMS | NMS 32L/160A | 4 | 5,5 | | 38,5 | 39,9 | 39,9 | 39,8 | 39,6 | 39,3 | 38,8 | 37,9 | 36,8 | 34,7 | 31,9 | 29,7 | 25,6 |
| BNMS | NMS 32L/200C | 4 | 5,5 | | 41,3 | 42,1 | 41,9 | 41,5 | 41,1 | 40,1 | 38,9 | 37 | 34,5 | 29,8 | 23,8 | - | - |
| BNMS | NMS 32L/200B | 5,5 | 7,5 | | 53 | 51,7 | 51,6 | 51,4 | 51,2 | 50,7 | 50 | 48,7 | 46,9 | 43,2 | 37,9 | 33,4 | - |
| BNMS | NMS 32L/200A | 7,5 | 10 | | 57,7 | 59,4 | 59,5 | 59,5 | 59,5 | 59,3 | 58,8 | 57,9 | 56,4 | 53,3 | 48,8 | 44,9 | 37,5 |

**P2:** Rated motor power output.
**H:** Total head in m
Tolerances according to UNI EN ISO 9906:2012

# NMS

## Coverage chart n ≈ 2900 rpm

### Three-phase

| | | | | Q = Flow | | | | | | | | | | | | | | |
|---|---|---|---|---|---|---|---|---|---|---|---|---|---|---|---|---|---|---|
| | | | | m³/h | 0 | 15 | 16,8 | 18,9 | 21 | 24 | 27 | 30 | 33 | 37,8 | 39 | 42 | 45 | 48 |
| Model | | P2 | | l/min | | 250 | 280 | 315 | 350 | 400 | 450 | 500 | 550 | 630 | 650 | 700 | 750 | 800 |
| | | kW | HP | H (m) = Total head | | | | | | | | | | | | | | |
| BNMS | NMS 40/125F | 1,1 | 1,5 | | 14 | 14 | 13,5 | 12,9 | 12,1 | 11 | 9,6 | 7,9 | 6 | - | - | - | - | - |
| BNMS | NMS 40/125C | 1,5 | 2 | | 17 | 17,5 | 17,1 | 16,6 | 15,9 | 14,9 | 13,6 | 12,1 | 10,4 | 7,4 | 6,6 | - | - | - |
| BNMS | NMS 40/125A | 2,2 | 3 | | 21,8 | 22 | 21,8 | 21,5 | 21 | 20,1 | 19,1 | 17,9 | 16,4 | 13,9 | 13,2 | 11,4 | - | - |
| BNMS | NMS 40/160C | 2,2 | 3 | | 23 | 23 | 22,7 | 22,1 | 21,4 | 20 | 18,4 | 16,6 | 14,5 | 11 | 10 | - | - | - |
| BNMS | NMS 40/160B | 3 | 4 | | 29,9 | 29 | 28,6 | 28,1 | 27,5 | 26,4 | 25,1 | 23,5 | 21,6 | 18 | 16,9 | 14,1 | - | - |
| BNMS | NMS 40/160A | 4 | 5,5 | | 36 | 37 | 36,7 | 36,4 | 35,8 | 34,9 | 33,7 | 32,2 | 30,4 | 27 | - | - | - | - |
| BNMS | NMS 40/160A-S | 5,5 | 7,5 | | 36 | 37 | 36,7 | 36,4 | 35,8 | 34,9 | 33,7 | 32,2 | 30,4 | 27 | 26 | 23,3 | 20,3 | 16,9 |
| BNMS | NMS 40/200D | 4 | 5,5 | | 41 | 39 | 38,1 | 37 | 35,6 | 33,3 | 30,5 | - | - | - | - | - | - | - |
| BNMS | NMS 40/200D-S | 5,5 | 7,5 | | 41 | 39 | 38,1 | 37 | 35,6 | 33,3 | 30,5 | 26,9 | 22,7 | 14 | - | - | - | - |
| BNMS | NMS 40/200C | 4 | 5,5 | | 43 | 41,5 | 40,6 | 39,4 | 38,1 | - | - | - | - | - | - | - | - | - |
| BNMS | NMS 40/200C-S | 5,5 | 7,5 | | 43 | 41,5 | 40,6 | 39,4 | 38,1 | 36 | 33,5 | - | - | - | - | - | - | - |
| BNMS | NMS 40/200B | 5,5 | 7,5 | | 50,5 | 50 | 49,3 | 48,4 | 47,4 | 45,8 | 43,7 | 41 | 37,7 | - | - | - | - | - |
| BNMS | NMS 40/200B-S | 7,5 | 10 | | 50,5 | 50 | 49,3 | 48,4 | 47,4 | 45,8 | 43,7 | 41 | 37,7 | 30,5 | - | - | - | - |
| BNMS | NMS 40/200AR | 5,5 | 7,5 | | 55 | 55 | 54,7 | 53,9 | 52,9 | 51,1 | - | - | - | - | - | - | - | - |
| BNMS | NMS 40/200AR-S | 7,5 | 10 | | 55 | 55 | 54,7 | 53,9 | 52,9 | 51,1 | 49 | - | - | - | - | - | - | - |
| BNMS | NMS 40/200A | 7,5 | 10 | | 57,5 | 57,5 | 57 | 56,3 | 55,5 | 54,3 | 52,7 | 50,7 | 48 | 42,2 | 40,4 | 35,2 | - | - |
| BNMS | NMS 40/250C | 11 | 15 | | 62 | 61 | 60,9 | 60,6 | 59,9 | 58,4 | 56,2 | 53,3 | 49,6 | 42 | 39,7 | 33,4 | - | - |
| BNMS | NMS 40/250B | 11 | 15 | | 70 | 69,5 | 69,3 | 68,9 | 68,4 | 67,3 | 65,7 | 63,4 | 60,3 | 53,4 | 51,2 | 44,9 | - | - |
| BNMS | NMS 40/250A | 15 | 20 | | 90 | 90 | 89,8 | 89,5 | 89,1 | 88,3 | 87,1 | 85,3 | 82,9 | 77,5 | 75,7 | 70,7 | - | - |

### Three-phase

| | | | | Q = Flow | | | | | | | | | | | | | | | |
|---|---|---|---|---|---|---|---|---|---|---|---|---|---|---|---|---|---|---|---|
| | | | | m³/h | 0 | 24 | 27 | 30 | 33 | 37,8 | 42 | 48 | 54 | 60 | 66 | 69 | 72 | 75 | 78 | 81 |
| Model | | P2 | | l/min | | 400 | 450 | 500 | 550 | 630 | 700 | 800 | 900 | 1000 | 1100 | 1150 | 1200 | 1250 | 1300 | 1350 |
| | | kW | HP | H (m) = Total head | | | | | | | | | | | | | | | | |
| BNMS | NMS 50/125F | 2,2 | 3 | | 16,5 | - | - | 15,5 | 15,1 | 14,2 | 13,3 | 11,8 | 10,1 | 8,1 | 5,9 | - | - | - | - | - |
| BNMS | NMS 50/125D | 3 | 4 | | 20,5 | - | - | 20 | 19,5 | 18,7 | 17,8 | 16,4 | 14,7 | 12,8 | 10,5 | 9,2 | 7,9 | - | - | - |
| BNMS | NMS 50/125A | 4 | 5,5 | | 24,1 | - | - | 24 | 23,8 | 23,2 | 22,5 | 21,1 | 19,4 | 17,4 | 15,1 | 13,9 | 12,7 | 11,4 | 10 | - |
| BNMS | NMS 50/125S | 4 | 5,5 | | 27,6 | - | - | 26,5 | 26,1 | 25,4 | 24,7 | 23,4 | 21,9 | - | - | - | - | - | - | - |
| BNMS | NMS 50/125S-S | 5,5 | 7,5 | | 27,6 | - | - | 26,5 | 26,1 | 25,4 | 24,7 | 23,4 | 21,9 | 20 | 17,9 | 16,7 | 15,5 | 14,1 | 12,7 | 11,1 |
| BNMS | NMS 50/160B | 5,5 | 7,5 | | 30,5 | - | - | 31 | 30,3 | 29,2 | 28 | 26,2 | 24,1 | 21,7 | 18,8 | 17,2 | 15,5 | 13,6 | 11,6 | 9,5 |
| BNMS | NMS 50/160A | 7,5 | 10 | | 38 | - | - | 38,5 | 38,2 | 37,4 | 36,4 | 34,7 | 32,5 | 29,9 | 27,1 | 25,5 | 24 | 22,3 | 20,7 | 19 |
| BNMS | NMS 50/200B | 11 | 15 | | 48,4 | 48 | 47,7 | 47,3 | 46,8 | 45,7 | 44,6 | 42,6 | 40 | 36,7 | 32,9 | 30,6 | 28,2 | 25,6 | 22,8 | - |
| BNMS | NMS 50/200A | 11 | 15 | | 54 | 55 | 54,9 | 54,6 | 54,2 | 53,3 | 52,3 | 50,3 | 47,9 | 44,9 | 41,4 | 39,4 | 37,2 | 35 | 32,5 | - |
| BNMS | NMS 50/200S | 15 | 20 | | 59 | 60 | 59,8 | 59,6 | 59,2 | 58,4 | 57,5 | 55,8 | 53,5 | 50,6 | 47 | 45 | 42,7 | 40,2 | 37,5 | - |
| BNMS | NMS 50/250C | 11 | 15 | | 55,1 | 55 | 54,5 | 53,9 | 53,1 | 51,4 | 49,5 | 46 | 41,4 | 35,6 | 28,5 | 24,5 | - | - | - | - |
| BNMS | NMS 50/250B | 15 | 20 | | 69 | 69 | 68,6 | 68 | 67,3 | 65,8 | 64,2 | 61,1 | 57,1 | 52,3 | 46,4 | 43,1 | - | - | - | - |
| BNMS | NMS 50/250A | 18,5 | 25 | | 80 | 80,5 | 80,3 | 80 | 79,5 | 78,4 | 77,1 | 74,6 | 71,3 | 67 | 61,6 | 58,5 | - | - | - | - |

**P2:** Rated motor power output.
**H:** Total head in m
Tolerances according to UNI EN ISO 9906:2012

# NMS

## Coverage chart n ≈ 2900 rpm

### Three-phase

| | | | | Q = Flow | | | | | | | | | | | | | | |
|---|---|---|---|---|---|---|---|---|---|---|---|---|---|---|---|---|---|---|
| | | | | m³/h | 0 | 37,8 | 42 | 48 | 54 | 60 | 66 | 75 | 84 | 96 | 108 | 120 | 132 | 141 |
| Model | | P2 | | l/min | | 630 | 700 | 800 | 900 | 1000 | 1100 | 1250 | 1400 | 1600 | 1800 | 2000 | 2200 | 2350 |
| | | kW | HP | H (m) = Total head | | | | | | | | | | | | | | |
| BNMS | NMS 65/125E | 4 | 5,5 | | 16,2 | 16,5 | 16,4 | 16,2 | 15,9 | 15,5 | 15,1 | 14,3 | 13,2 | 11,4 | 9,2 | - | - | - |
| BNMS | NMS 65/125C | 5,5 | 7,5 | | 20,8 | 21,1 | 21 | 20,8 | 20,6 | 20,3 | 19,9 | 19,1 | 18,2 | 16,5 | 14,4 | 11,8 | - | - |
| BNMS | NMS 65/125A | 7,5 | 10 | | 26 | 25,9 | 25,8 | 25,6 | 25,4 | 25,1 | 24,8 | 24,1 | 23,3 | 21,9 | 20 | 17,6 | - | - |
| BNMS | NMS 65/160D | 7,5 | 10 | | 24 | - | - | 24,3 | 24,1 | 23,9 | 23,6 | 23,1 | 22,3 | 20,8 | 18,8 | 16,3 | - | - |
| BNMS | NMS 65/160C | 11 | 15 | | 27,8 | - | - | 28,1 | 28 | 27,8 | 27,6 | 27,1 | 26,3 | 24,9 | 23,1 | 20,7 | 17,7 | - |
| BNMS | NMS 65/160B | 11 | 15 | | 31,8 | - | - | 32,6 | 32,5 | 32,3 | 32 | 31,5 | 30,8 | 29,5 | 27,9 | 25,7 | 23 | - |
| BNMS | NMS 65/160AR | 15 | 20 | | 35,8 | - | - | 36,4 | 36,3 | 36,2 | 35,9 | 35,5 | 34,8 | 33,7 | 32,1 | 30 | 27,5 | - |
| BNMS | NMS 65/160A | 15 | 20 | | 38,8 | - | - | 40,5 | 40,4 | 40,2 | 40 | 39,5 | 38,8 | 37,6 | 36,1 | 34,1 | 31,7 | - |
| BNMS | NMS 65/200C | 15 | 20 | | 41 | - | - | 44 | 43,8 | 43,5 | 43,1 | 42,3 | 41,2 | 39,4 | 37,1 | 34,4 | 31,4 | 28,8 |
| BNMS | NMS 65/200B | 18,5 | 25 | | 47 | - | - | 50,5 | 50,4 | 50,2 | 49,9 | 49,2 | 48,3 | 46,8 | 44,8 | 42,5 | 39,8 | 37,5 |
| BNMS | NMS 65/200A | 22 | 30 | | 54 | - | - | 57 | 57 | 56,9 | 56,6 | 56,1 | 55,4 | 54 | 52,3 | 50,1 | 47,6 | 45,4 |
| BNMS | NMS 65/250C | 22 | 30 | | 56 | - | - | 61 | 60,8 | 60,4 | 59,8 | 58,7 | 57,2 | 54,6 | 51,3 | 47,5 | 43 | - |
| BNMS | NMS 65/250B/B | 30 | 40 | | 68 | - | - | 73,5 | 73,7 | 73,7 | 73,5 | 72,8 | 71,6 | 69,4 | 66,6 | 63,1 | 59 | - |
| BNMS | NMS 65/250A/B | 37 | 50 | | 80 | - | - | 86,5 | 86,7 | 86,8 | 86,7 | 86,1 | 85,2 | 83,5 | 81,1 | 78,1 | 74,5 | - |

### Three-phase

| | | | | Q = Flow | | | | | | | | | | | | | | |
|---|---|---|---|---|---|---|---|---|---|---|---|---|---|---|---|---|---|---|
| | | | | m³/h | 0 | 75 | 84 | 96 | 108 | 120 | 132 | 150 | 168 | 180 | 192 | 210 | 240 | 270 | 300 |
| Model | | P2 | | l/min | | 1250 | 1400 | 1600 | 1800 | 2000 | 2200 | 2500 | 2800 | 3000 | 3200 | 3500 | 4000 | 4500 | 5000 |
| | | kW | HP | H (m) = Total head | | | | | | | | | | | | | | | |
| BNMS | NMS 80/160E | 7,5 | 10 | | 23 | 21,5 | 20,9 | 19,9 | 18,7 | 17,4 | 15,9 | 13,4 | 10,6 | - | - | - | - | - | - |
| BNMS | NMS 80/160D | 11 | 15 | | 26 | 25,2 | 24,5 | 23,5 | 22,4 | 21,1 | 19,6 | 17,2 | 14,4 | - | - | - | - | - | - |
| BNMS | NMS 80/160C | 11 | 15 | | 29 | 28,7 | 28,2 | 27,4 | 26,4 | 25,2 | 23,8 | 21,3 | 18,5 | 16,4 | - | - | - | - | - |
| BNMS | NMS 80/160B | 15 | 20 | | 35 | 34,8 | 34,4 | 33,8 | 33 | 32,1 | 30,9 | 28,9 | 26,4 | 24,5 | 22,4 | - | - | - | - |
| BNMS | NMS 80/160A | 18,5 | 25 | | 40 | 39,9 | 39,5 | 39 | 38,3 | 37,4 | 36,4 | 34,5 | 32,2 | 30,3 | 28,1 | - | - | - | - |
| BNMS | NMS 80/200B/B | 22 | 30 | | 42 | 44,4 | 43,9 | 43,2 | 42,4 | 41,5 | 40,5 | 38,6 | 36,4 | 34,6 | 32,5 | - | - | - | - |
| BNMS | NMS 80/200A/B | 30 | 40 | | 54,4 | 56,6 | 56,3 | 55,8 | 55,2 | 54,4 | 53,5 | 51,7 | 49,4 | 47,7 | 45,6 | - | - | - | - |
| BNMS | NMS 80/250E | 22 | 30 | | 52 | 51 | 50 | 48,4 | 46,6 | 44,5 | 42,1 | 37,9 | 32,9 | 29,1 | - | - | - | - | - |
| BNMS | NMS 80/250D/A | 30 | 40 | | 65 | 65 | 63,9 | 62,4 | 60,8 | 58,9 | 56,9 | 53,2 | 48,7 | 45,2 | 41,2 | - | - | - | - |
| BNMS | NMS 80/250C/A | 37 | 50 | | 74 | 73,5 | 72,9 | 71,9 | 70,6 | 68,9 | 66,9 | 63,3 | 58,8 | 55,4 | 51,6 | - | - | - | - |
| BNMS | NMS 80/250B/A | 45 | 60 | | 84 | 84 | 83,5 | 82,6 | 81,4 | 79,9 | 78,1 | 74,7 | 70,4 | 66,9 | 63,1 | - | - | - | - |
| BNMS | NMS 80/250A/A | 55 | 75 | | 95 | 95 | 94,3 | 93,4 | 92,5 | 91,5 | 90,2 | 87,5 | 83,8 | 80,5 | 76,5 | - | - | - | - |
| BNMS | NMS 100/200E | 18,5 | 25 | | 30 | - | - | - | 33 | 32,8 | 32,3 | 31,1 | 29,5 | 28,1 | 26,6 | 24 | 19,1 | - | - |
| BNMS | NMS 100/200D/A | 22 | 30 | | 36 | - | - | - | 38,8 | 38,4 | 37,9 | 36,8 | 35,2 | 33,8 | 32,2 | 29,3 | 23,8 | - | - |
| BNMS | NMS 100/200C/A | 30 | 40 | | 45,5 | - | - | - | 45 | 44,6 | 44,2 | 43,4 | 42,4 | 41,6 | 40,5 | 38,7 | 34,6 | 29,1 | 21,9 |
| BNMS | NMS 100/200B/A | 37 | 50 | | 54,2 | - | - | - | 54 | 53,6 | 53,2 | 52,4 | 51,4 | 50,6 | 49,6 | 47,8 | 43,9 | 38,7 | 31,9 |
| BNMS | NMS 100/200A/A | 45 | 60 | | 62 | - | - | - | 61,5 | 61,1 | 60,8 | 60,1 | 59,3 | 58,6 | 57,8 | 56,4 | 53 | 48,3 | 41,9 |
| BNMS | NMS 100/250B/A | 55 | 75 | | 74 | - | - | - | 73,5 | 73 | 72,4 | 71,2 | 69,8 | 68,7 | 67,4 | 65,2 | 60,8 | 55,3 | 48,6 |
| BNMS | NMS 100/250A/A | 75 | 100 | | 92 | - | - | - | 91 | 90,6 | 90,2 | 89,5 | 88,6 | 87,8 | 86,9 | 85,1 | 81 | 75,1 | 66,9 |

**P2:** Rated motor power output.
**H:** Total head in m
Tolerances according to UNI EN ISO 9906:2012

# NMS

## Coverage chart n ≈ 2900 rpm

### Rated current

| Motor | IE3 | | | IE4 | | |
|---|---|---|---|---|---|---|
| P2 | 400V | 690V | | 400V | 690V | |
| kW | A | A | Ia/In | A | A | Ia/In |
| 0.55 | 2.3 | - | 4.8 | 2.3 | - | 4.8 |
| 0.75 | 2.3 | - | 6.1 | 2.3 | - | 6.1 |
| 1.1 | 2.7 | - | 5.5 | 2.7 | - | 5.5 |
| 1.5 | 4.3 | - | 6.1 | 4.3 | - | 6.1 |
| 2.2 | 5.3 | - | 8.4 | 5.3 | - | 8.4 |
| 3 | 6.6 | - | 8.2 | 6.6 | - | 8.2 |
| 4 | 9.6 | 5.5 | 8.9 | 7.3 | 4.2 | 7.5 |
| 5.5 | 10.8 | 6.2 | 9.1 | 10.8 | 6.2 | 9.1 |
| 7.5 | 14.3 | 8.3 | 9.1 | 13.4 | 7.8 | 7.5 |
| 9.2 | 18.5 | 10.7 | 8.2 | 18.5 | 10.7 | 8.2 |
| 11 | 21.5 | 12.4 | 8.5 | 21.5 | 12.4 | 8.5 |
| 15 | 27.3 | 15.8 | 9.5 | 27.3 | 15.8 | 9.5 |
| 18.5 | 34 | 19.6 | 9.5 | 34 | 19.6 | 9.5 |
| 22 | 41 | 23.7 | 9.5 | 38 | 22 | 9.5 |
| 30 | 53 | 30.5 | 8.6 | 51.5 | 29.9 | 9 |
| 37 | 65 | 37.5 | 7.1 | 63.3 | 36.7 | 9 |
| 45 | 78 | 45 | 6.9 | 76.8 | 44.5 | 9 |
| 55 | 95 | 55 | 6.7 | 93.6 | 54.3 | 9 |
| 75 | 128 | 74 | 6.8 | 127.2 | 73.7 | 8.5 |

**A*:** Calpeda motor Standard
**Ia/In** D.O.L. starting current / Nominal current

# NM4

## Coverage chart n ≈ 1450 rpm

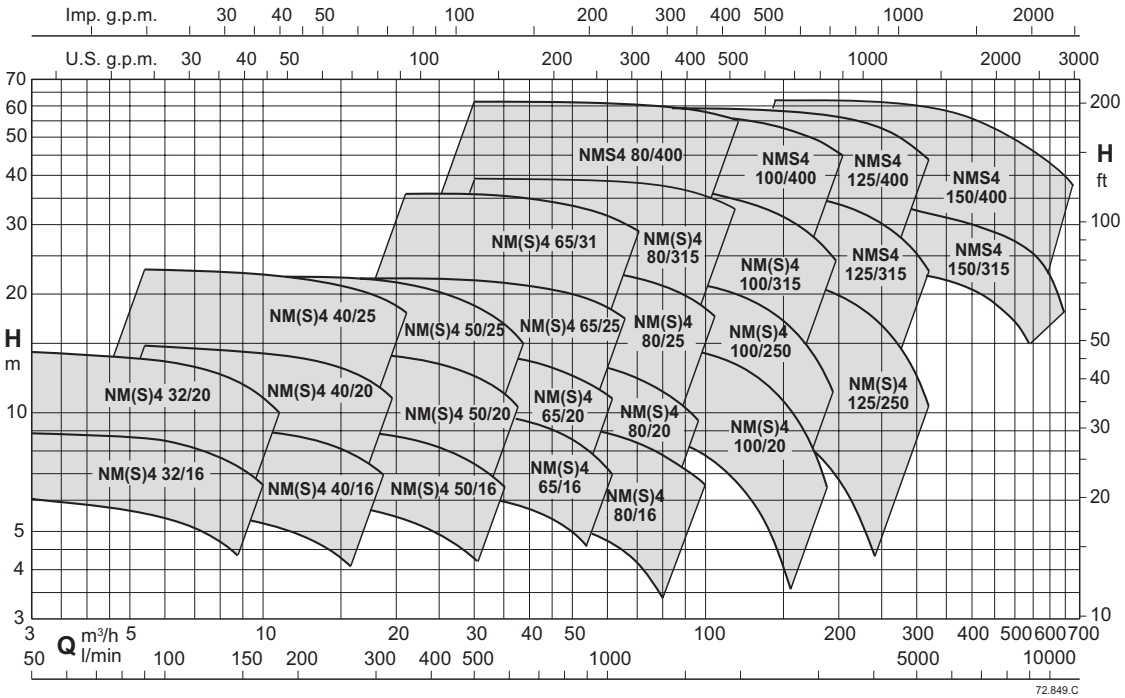


## Performance n ≈ 1450 rpm

### Three-phase

| | | | | | | Q = Flow | | | | | | | | | | | | | | |
|---|---|---|---|---|---|---|---|---|---|---|---|---|---|---|---|---|---|---|---|---|
| | | | | | | m³/h | 0 | 2,4 | 3 | 3,6 | 4,2 | 4,8 | 5,4 | 6 | 7,5 | 8,4 | 9,6 | 10,8 | 12 | 13,2 |
| Model | | 230V | 400V | P2 | | l/min | | 40 | 50 | 60 | 70 | 80 | 90 | 100 | 125 | 140 | 160 | 180 | 200 | 220 |
| | | A | | kW | HP | | H (m) = Total head | | | | | | | | | | | | | |
| BNM4 | NM4 32/16B/A | 1,65 | 0,95 | 0,37 | 0,5 | | 7,6 | 7,6 | 7,5 | 7,4 | - | 7,2 | 7,1 | 6,9 | 6,3 | 5,9 | 5,2 | 4,2 | - | - |
| BNM4 | NM4 32/16A/A | 1,65 | 0,95 | 0,37 | 0,5 | | 9 | 9 | 8,9 | 8,9 | - | 8,7 | 8,6 | 8,5 | 7,9 | 7,5 | 6,8 | 6 | 5,1 | - |
| BNM4 | NM4 32/20B/A | 2,6 | 1,5 | 0,55 | 0,75 | | 12,5 | 12,5 | 12,4 | 12,4 | 12,2 | 12 | 11,8 | 11,5 | 10,6 | 9,9 | 8,9 | 7,7 | 6,2 | 4,7 |
| BNM4 | NM4 32/20A/B | 3,3 | 1,9 | 0,75 | 1 | | 14,2 | 14,3 | 14,2 | 14,2 | 14,1 | 13,9 | 13,7 | 13,5 | 12,8 | 12,2 | 11,3 | 10,3 | 9 | 7,4 |

### Three-phase

| | | | | | | Q = Flow | | | | | | | | | | | | | | | | |
|---|---|---|---|---|---|---|---|---|---|---|---|---|---|---|---|---|---|---|---|---|---|---|
| | | | | | | m³/h | 0 | 5,4 | 6 | 7,5 | 8,4 | 9,6 | 10,8 | 12 | 13,2 | 15 | 16,8 | 18,9 | 21 | 24 | 27 | 30 |
| Model | | 230V | 400V | P2 | | l/min | | 90 | 100 | 125 | 140 | 160 | 180 | 200 | 220 | 250 | 280 | 315 | 350 | 400 | 450 | 500 |
| | | A | | kW | HP | | H (m) = Total head | | | | | | | | | | | | | | | |
| BNM4 | NM4 40/16C/B | 1,65 | 0,95 | 0,37 | 0,5 | | 5,9 | 6,1 | 6 | 5,9 | 5,8 | 5,6 | 5,4 | 5,2 | 5 | 4,5 | 3,9 | 3,1 | 2,3 | - | - | - |
| BNM4 | NM4 40/16B/B | 2,6 | 1,5 | 0,55 | 0,75 | | 7,3 | 7,6 | 7,6 | 7,6 | 7,6 | 7,3 | 7,1 | 6,9 | 6,6 | 6,3 | 5,7 | 5 | 4 | 2,7 | - | - |
| BNM4 | NM4 40/16A/C | 3,3 | 1,9 | 0,75 | 1 | | 9,3 | 9,6 | 9,6 | 9,6 | 9,4 | 9,3 | 9,1 | 9 | 8,8 | 8,4 | 7,9 | 7,2 | 6,4 | 5,1 | 3,5 | - |
| BNM4 | NM4 40/20B/B | 5 | 2,9 | 1,1 | 1,5 | | 13 | 13 | 12,9 | 12,7 | 12,6 | 12,4 | 12,2 | 12 | 11,5 | 10,8 | 10 | 8,6 | 7 | - | - | - |
| BNM4 | NM4 40/20A/B | 5 | 2,9 | 1,1 | 1,5 | | 14,8 | 14,8 | 14,7 | 14,5 | 14,4 | 14,2 | 14 | 13,8 | 13,6 | 13 | 12,2 | 11,3 | 10 | - | - | - |
| BNM4 | NM4 40/25C/C | 6 | 3,5 | 1,5 | 2 | | 17,4 | 17,4 | 17,3 | 17,2 | 17 | 16,8 | 16,6 | 16,3 | 16 | 15,1 | 13,8 | 12,1 | 10,4 | 7,2 | 2,8 | - |
| BNM4 | NM4 40/25B/C | 8,6 | 5 | 2,2 | 3 | | 21,3 | 21,4 | 21,5 | 21,3 | 21,2 | 21 | 20,9 | 20,8 | 20,5 | 20 | 19,5 | 18,3 | 16,4 | 13,3 | 10 | 5 |
| BNM4 | NM4 40/25A/B | 11,1 | 6,4 | 3 | 4 | | 22,8 | 22,9 | 22,8 | 22,9 | 22,8 | 22,5 | 22,5 | 22,2 | 22 | 21,8 | 21,4 | 20,4 | 18,9 | 16 | 12,6 | 8 |

**P2:** Rated motor power output.
**H:** Total head in m
Tolerances according to UNI EN ISO 9906:2012

# NM4

calpeda®

## Performance n ≈ 1450 rpm

### Three-phase

| | | | | | | | Q = Flow | | | | | | | | | | | | | | | |
|---|---|---|---|---|---|---|---|---|---|---|---|---|---|---|---|---|---|---|---|---|---|---|
| | | | | | | | m³/h | 0 | 10,8 | 12 | 13,2 | 15 | 16,8 | 18,9 | 21 | 24 | 27 | 30 | 33 | 37,8 | 42 | 48 |
| Model | | 230V | 400V | 690V | P2 | | l/min | | 180 | 200 | 220 | 250 | 280 | 315 | 350 | 400 | 450 | 500 | 550 | 630 | 700 | 800 |
| | | A | | | kW | HP | H (m) = Total head | | | | | | | | | | | | | | | |
| BNM4 | NM4 50/16B/C | 5 | 2,9 | - | 1,1 | 1,5 | | 8 | 8,2 | 8,2 | 8,2 | 8,1 | 8 | 7,8 | 7,6 | 7,2 | 6,7 | 6,2 | 5,5 | 4,4 | 3,3 | - |
| BNM4 | NM4 50/16A/C | 5 | 2,9 | - | 1,1 | 1,5 | | 9,5 | 9,6 | 9,6 | 9,6 | 9,5 | 9,5 | 9,3 | 9,1 | 8,8 | 8,3 | 7,8 | 7,2 | 6,1 | 4,9 | 3,1 |
| BNM4 | NM4 50/20C/C | 5 | 2,9 | - | 1,1 | 1,5 | | 11,3 | 11,8 | 11,8 | 11,7 | 11,7 | 11,5 | 11,3 | 10,9 | 10,4 | 9,8 | 9 | 8,1 | 6,3 | 4,7 | - |
| BNM4 | NM4 50/20B/C | 6 | 3,5 | - | 1,5 | 2 | | 13 | 13,4 | 13,4 | 13,4 | 13,3 | 13,1 | 12,9 | 12,6 | 12,1 | 11,5 | 10,8 | 9,9 | 8,2 | 6,4 | 3,7 |
| BNM4 | NM4 50/20A/C | 8,6 | 5 | - | 2,2 | 3 | | 14,5 | 14,9 | 14,9 | 14,9 | 14,9 | 14,8 | 14,6 | 14,4 | 14 | 13,4 | 12,8 | 12 | 10,4 | 8,6 | 6 |
| BNM4 | NM4 50/25D/B | 8,6 | 5 | - | 2,2 | 3 | | 14,4 | 14,5 | 14,4 | 14,3 | 14 | 13,7 | 13,4 | 13 | 12,2 | 11,2 | 9,7 | 8,1 | 5,4 | 2,3 | - |
| BNM4 | NM4 50/25C/C | 8,6 | 5 | - | 2,2 | 3 | | 17,2 | 17,8 | 17,8 | 17,7 | 17,5 | 17,2 | 16,8 | 16,4 | 15,7 | 14,9 | 13,8 | 12,4 | 9,7 | 6,8 | - |
| BNM4 | NM4 50/25B/B | 11,1 | 6,4 | - | 3 | 4 | | 20,4 | 20,7 | 20,7 | 20,7 | 20,6 | 20,4 | 20 | 19,5 | 18,9 | 18,2 | 17,1 | 15,9 | 13,2 | 10,6 | 5,8 |
| BNM4 | NM4 50/25A/B | - | 8,3 | 4,8 | 4 | 5,5 | | 22,3 | 22,7 | 22,7 | 22,6 | 22,5 | 22,4 | 22,1 | 21,6 | 21 | 20,2 | 19,4 | 18,3 | 16,4 | 13,6 | 9 |

### Three-phase

| | | | | | | | Q = Flow | | | | | | | | | | | | | | | |
|---|---|---|---|---|---|---|---|---|---|---|---|---|---|---|---|---|---|---|---|---|---|---|
| | | | | | | | m³/h | 0 | 21 | 24 | 27 | 30 | 33 | 37,8 | 42 | 48 | 54 | 60 | 66 | 75 | 84 | 96 |
| Model | | 230V | 400V | 690V | P2 | | l/min | | 350 | 400 | 450 | 500 | 550 | 630 | 700 | 800 | 900 | 1000 | 1100 | 1250 | 1400 | 1600 |
| | | A | | | kW | HP | H (m) = Total head | | | | | | | | | | | | | | | |
| BNM4 | NM4 65/16C/C | 5 | 2,9 | - | 1,1 | 1,5 | | 6 | 6,1 | 6,1 | 6 | 6 | 5,9 | 5,8 | 5,6 | 5,3 | 4,8 | 4,2 | - | - | - | - |
| BNM4 | NM4 65/16B/C | 5 | 2,9 | - | 1,1 | 1,5 | | 7,1 | 7,2 | 7,1 | 7,1 | 7 | 7 | 6,8 | 6,6 | 6,3 | 5,8 | 5,2 | 4,5 | - | - | - |
| BNM4 | NM4 65/16A/C | 6 | 3,5 | - | 1,5 | 2 | | 8,6 | 8,8 | 8,8 | 8,7 | 8,7 | 8,6 | 8,5 | 8,3 | 8 | 7,6 | 7,1 | 6,4 | 5,2 | - | - |
| BNM4 | NM4 65/16S/A | 8,6 | 5 | - | 2,2 | 3 | | 9,9 | 10,2 | 10,2 | 10,1 | 10,1 | 10 | 9,9 | 9,7 | 9,4 | 9,1 | 8,6 | 8 | 7 | 5,7 | - |
| BNM4 | NM4 65/20B/C | 8,6 | 5 | - | 2,2 | 3 | | 11,1 | 11,7 | 11,7 | 11,6 | 11,6 | 11,5 | 11,3 | 11 | 10,6 | 10,1 | 9,5 | 8,7 | 7,4 | 5,8 | 3,3 |
| BNM4 | NM4 65/20A/B | 11,1 | 6,4 | - | 3 | 4 | | 13,5 | 14,2 | 14,2 | 14,2 | 14,1 | 14,1 | 13,9 | 13,7 | 13,4 | 13 | 12,5 | 11,8 | 10,7 | 9,3 | 7 |
| BNM4 | NM4 65/25B/B | - | 8,3 | 4,8 | 4 | 5,5 | | 16,5 | 17,9 | 18 | 18 | 18 | 18 | 17,8 | 17,5 | 17 | 16,3 | 15,4 | 14,4 | 12,5 | 10,4 | 7 |
| BNM4 | NM4 65/25A/C | - | 12,5 | 7,2 | 5,5 | 7,5 | | 21 | 22,2 | 22,3 | 22,4 | 22,4 | 22,4 | 22,2 | 22 | 21,6 | 21 | 20,2 | 19,3 | 17,6 | 15,7 | 12,6 |
| BNM4 | NM4 65/31C/B | - | 12,5 | 7,2 | 5,5 | 7,5 | | 26 | 25,8 | 25,7 | 25,5 | 25,3 | 25 | 24,4 | 23,8 | 22,8 | 21,5 | 20 | 18,2 | 15 | 11 | - |
| BNM4 | NM4 65/31B/B | - | 16 | 9,2 | 7,5 | 10 | | 31 | 31 | 31 | 30,9 | 30,8 | 30,6 | 30,2 | 29,7 | 28,8 | 27,8 | 26,5 | 25 | 22,2 | 18,6 | - |
| BNM4 | NM4 65/31A/B | - | 20,5 | 11,8 | 9,2 | 12,5 | | 36 | 35,9 | 35,9 | 35,8 | 35,7 | 35,5 | 35,1 | 34,6 | 33,8 | 32,8 | 31,6 | 30,2 | 27,8 | 25 | - |

### Three-phase

| | | | | | | | Q = Flow | | | | | | | | | | | | | | | | | | |
|---|---|---|---|---|---|---|---|---|---|---|---|---|---|---|---|---|---|---|---|---|---|---|---|---|---|
| | | | | | | | m³/h | 0 | 30 | 33 | 37,8 | 42 | 48 | 54 | 60 | 66 | 75 | 84 | 96 | 108 | 120 | 132 | 150 | 168 | 180 |
| Model | | 230V | 400V | 690V | P2 | | l/min | | 500 | 550 | 630 | 700 | 800 | 900 | 1000 | 1100 | 1250 | 1400 | 1600 | 1800 | 2000 | 2200 | 2500 | 2800 | 3000 |
| | | A | | | kW | HP | H (m) = Total head | | | | | | | | | | | | | | | | | | |
| - | NM4 80/16C/C | 5 | 2,9 | - | 1,1 | 1,5 | | 6,6 | 6,1 | 6,1 | 5,9 | 5,8 | 5,5 | 5,2 | 4,9 | 4,6 | 4 | 3,3 | - | - | - | - | - | - | - |
| - | NM4 80/16B/C | 6 | 3,5 | - | 1,5 | 2 | | 8,1 | 7,8 | 7,7 | 7,6 | 7,5 | 7,3 | 7 | 6,8 | 6,4 | 5,9 | 5,2 | 4,1 | - | - | - | - | - | - |
| - | NM4 80/16A/C | 8,6 | 5 | - | 2,2 | 3 | | 10,1 | 10 | 10 | 9,9 | 9,8 | 9,7 | 9,5 | 9,3 | 9 | 8,5 | 8 | 7 | 5,9 | - | - | - | - | - |
| BNM4 | NM4 80/20C/C | 8,6 | 5 | - | 2,2 | 3 | | 8,6 | 9 | 9 | 8,9 | 8,8 | 8,7 | 8,5 | 8,2 | 7,9 | 7,4 | 6,8 | 5,7 | 4,3 | 2,7 | - | - | - | - |
| BNM4 | NM4 80/20B/B | 11,1 | 6,4 | - | 3 | 4 | | 11,3 | 11,7 | 11,7 | 11,7 | 11,6 | 11,5 | 11,3 | 11,1 | 10,8 | 10,3 | 9,7 | 8,7 | 7,4 | 5,9 | 4,1 | - | - | - |
| BNM4 | NM4 80/20A/B | - | 8,3 | 4,8 | 4 | 5,5 | | 13,7 | 14,2 | 14,2 | 14,1 | 14 | 13,9 | 13,7 | 13,5 | 13,2 | 12,7 | 12,1 | 11,1 | 9,9 | 8,5 | 6,9 | - | - | - |
| BNM4 | NM4 80/25C/A | - | 8,3 | 4,8 | 4 | 5,5 | | 17 | 16,9 | 16,8 | 16,7 | 16,6 | 16,3 | 15,9 | 15,4 | 14,8 | 13,9 | 12,7 | 11,1 | 9,3 | 7,2 | - | - | - | - |
| - | NM4 80/25B/B | - | 12,5 | 7,2 | 5,5 | 7,5 | | 20,8 | 20,7 | 20,7 | 20,6 | 20,5 | 20,3 | 20 | 19,6 | 19,1 | 18,2 | 17,1 | 15,4 | 13,5 | 11,4 | 9 | - | - | - |
| - | NM4 80/25A/B | - | 16 | 9,2 | 7,5 | 10 | | 23,8 | 23,7 | 23,7 | 23,6 | 23,5 | 23,3 | 23 | 22,7 | 22,2 | 21,5 | 20,5 | 19 | 17,2 | 15,1 | 12,7 | - | - | - |
| BNM4 | NM4 80/31C/B | - | 20,5 | 11,8 | 9,2 | 12,5 | | 24,3 | 25,7 | 25,8 | 25,8 | 25,8 | 25,8 | 25,6 | 25,4 | 25,1 | 24,4 | 23,6 | 22,2 | 20,4 | 18,3 | 15,9 | - | - | - |
| - | NM4 80/31B | - | 22,5 | 13 | 11 | 15 | | 28,5 | 30,3 | 30,5 | 30,6 | 30,7 | 30,7 | 30,7 | 30,5 | 30,2 | 29,6 | 28,8 | 27,5 | 25,9 | 24,1 | 22 | - | - | - |
| - | NM4 80/31A | - | 29 | 16,7 | 15 | 20 | | 34,5 | 36,3 | 36,4 | 36,5 | 36,5 | 36,6 | 36,5 | 36,3 | 36,1 | 35,7 | 35 | 33,9 | 32,5 | 30,9 | 28,9 | 25,4 | - | - |
| BNMS4 | NMS4 80/315S | - | - | - | 18,5 | 25 | | 38 | 39,1 | 39,2 | 39,3 | 39,4 | 39,5 | 39,4 | 39,3 | 39,2 | 38,7 | 38,1 | 37,1 | 35,7 | 34,1 | 32,1 | 28,3 | 22,5 | - |
| BNMS4 | NMS4 80/400C/B | - | - | - | 18,5 | 25 | | 42 | 42,8 | 42,8 | 42,9 | 42,9 | 42,7 | 42,5 | 42,2 | 41,8 | 40,9 | 39,8 | 37,9 | 35,4 | 32,5 | 29 | - | - | - |
| BNMS4 | NMS4 80/400B/B | - | - | - | 22 | 30 | | 47 | 48,2 | 48,2 | 48,2 | 48,2 | 48,1 | 47,9 | 47,7 | 47,3 | 46,6 | 45,7 | 44,1 | 42,1 | 39,5 | 36,3 | 30,5 | - | - |
| BNMS4 | NMS4 80/400A/B | - | - | - | 30 | 40 | | 60 | 61,4 | 61,5 | 61,5 | 61,6 | 61,5 | 61,5 | 61,3 | 61,1 | 60,7 | 60,1 | 59 | 57,6 | 55,8 | 53,6 | 49,5 | - | - |
| BNMS4 | NMS4 80/400S | - | - | - | 37 | 50 | | 60 | 61,4 | 61,5 | 61,5 | 61,6 | 61,6 | 61,5 | 61,3 | 61,1 | 60,7 | 60,1 | 59 | 57,6 | 55,8 | 53,7 | 49,5 | 43,9 | 39,2 |

**P2:** Rated motor power output.
**H:** Total head in m
Tolerances according to UNI EN ISO 9906:2012

# NM4

calpeda®

## Performance n ≈ 1450 rpm

### Three-phase

| | | | | | | | Q = Flow | | | | | | | | | | | | | | | |
|---|---|---|---|---|---|---|---|---|---|---|---|---|---|---|---|---|---|---|---|---|---|---|
| | | | | | | m³/h | 0 | 48 | 54 | 60 | 66 | 75 | 84 | 96 | 108 | 120 | 132 | 150 | 168 | 180 | 192 | 210 |
| Model | | 230V | 400V | 690V | P2 | l/min | | 800 | 900 | 1000 | 1100 | 1250 | 1400 | 1600 | 1800 | 2000 | 2200 | 2500 | 2800 | 3000 | 3200 | 3500 |
| | | A | | | kW | HP | H (m) = Total head | | | | | | | | | | | | | | | |
| BNM4 | NM4 100/20C/A | 11,1 | 6,4 | - | 3 | 4 | | 9,4 | 9,4 | 9,3 | 9,2 | 9,1 | 8,8 | 8,5 | 8 | 7,3 | 6,5 | 5,6 | 4 | - | - | - | - |
| BNM4 | NM4 100/20B/A | - | 8,3 | 4,8 | 4 | 5,5 | | 12 | 12 | 11,9 | 11,8 | 11,7 | 11,5 | 11,2 | 10,7 | 10,1 | 9,3 | 8,4 | 6,7 | 4,5 | - | - | - |
| BNM4 | NM4 100/20A/C | - | 12,5 | 7,2 | 5,5 | 7,5 | | 15,1 | 15,2 | 15,2 | 15,1 | 15,1 | 14,9 | 14,7 | 14,3 | 13,7 | 13,1 | 12,2 | 10,8 | 8,9 | 7,5 | 6 | - |
| - | NM4 100/25B/B | - | 16 | 9,2 | 7,5 | 10 | | 19,3 | 19,5 | 19,5 | 19,4 | 19,3 | 19,1 | 18,7 | 18,2 | 17,5 | 16,6 | 15,6 | 13,8 | 11,7 | 10,1 | 8,4 | 5,5 |
| - | NM4 100/25A/B | - | 20,5 | 11,8 | 9,2 | 12,5 | | 22,1 | 22,3 | 22,3 | 22,2 | 22,1 | 21,9 | 21,7 | 21,2 | 20,5 | 19,8 | 18,8 | 17,1 | 15 | 13,4 | 11,7 | 8,9 |
| - | NM4 100/31C | - | 22,5 | 13 | 11 | 15 | | 27 | 26,9 | 26,8 | 26,7 | 26,5 | 26,2 | 25,7 | 24,9 | 23,9 | 22,7 | 21,3 | 18,8 | 15,9 | 13,7 | 11,3 | - |
| - | NM4 100/31B | - | 29 | 16,7 | 15 | 20 | | 31,5 | 31,5 | 31,5 | 31,5 | 31,4 | 31,2 | 30,8 | 30,2 | 29,3 | 28,2 | 26,9 | 24,6 | 21,9 | 19,8 | 17,6 | 14 |
| BNMS4 | NMS4 100/315A/A | - | - | - | 18,5 | 25 | | 36,8 | 36,8 | 36,9 | 36,9 | 36,9 | 36,7 | 36,4 | 35,9 | 35,2 | 34,4 | 33,3 | 31,4 | 29,1 | 27,3 | 25,4 | 22,1 |
| BNMS4 | NMS4 100/400C/A | - | - | - | 22 | 30 | | 41,5 | 41,3 | 41,2 | 41,2 | 41 | 40,8 | 40,4 | 39,8 | 38,9 | 37,8 | 36,5 | 34,1 | 31,1 | 28,7 | 26 | - |
| BNMS4 | NMS4 100/400B/A | - | - | - | 30 | 40 | | 50 | 50,2 | 50,1 | 50,1 | 49,9 | 49,7 | 49,4 | 48,8 | 48 | 47,1 | 46 | 43,9 | 41,4 | 39,4 | 37,2 | 33,4 |
| BNMS4 | NMS4 100/400A/A | - | - | - | 37 | 50 | | 58 | 58,2 | 58,1 | 58,1 | 58 | 57,8 | 57,6 | 57 | 56,4 | 55,5 | 54,6 | 52,8 | 50,6 | 48,9 | 47,1 | 44 |

### Three-phase

| | | | | | | | Q = Flow | | | | | | | | | | | | | | |
|---|---|---|---|---|---|---|---|---|---|---|---|---|---|---|---|---|---|---|---|---|---|
| | | | | | | m³/h | 0 | 84 | 96 | 108 | 120 | 132 | 150 | 168 | 180 | 192 | 210 | 240 | 270 | 300 | 330 |
| Model | | 400V | 690V | P2 | | l/min | | 1400 | 1600 | 1800 | 2000 | 2200 | 2500 | 2800 | 3000 | 3200 | 3500 | 4000 | 4500 | 5000 | 5500 |
| | | A | | kW | HP | | H (m) = Total head | | | | | | | | | | | | | | |
| - | NM4 125/25E/B | 12,5 | 7,2 | 5,5 | 7,5 | | 11 | 11 | 10,8 | 10,5 | 10,1 | 9,7 | 9,1 | 8,3 | 7,8 | 7,2 | 6,2 | 4,4 | - | - | - |
| - | NM4 125/25D/B | 16 | 9,2 | 7,5 | 10 | | 14 | 14 | 13,9 | 13,7 | 13,4 | 13 | 12,4 | 11,6 | 11 | 10,4 | 9,4 | 7,4 | 5,1 | - | - |
| - | NM4 125/25C/B | 20,5 | 11,8 | 9,2 | 12,5 | | 16,7 | 16,7 | 16,6 | 16,5 | 16,2 | 15,9 | 15,4 | 14,6 | 14,1 | 13,5 | 12,4 | 10,5 | 8,2 | 5,8 | - |
| - | NM4 125/25B | 22,5 | 13 | 11 | 15 | | 19,1 | 19,3 | 19,2 | 19,1 | 18,9 | 18,7 | 18,2 | 17,5 | 16,9 | 16,3 | 15,3 | 13,3 | 10,9 | 8,2 | - |
| - | NM4 125/25A | 29 | 16,7 | 15 | 20 | | 22,8 | 22,7 | 22,7 | 22,6 | 22,4 | 22,2 | 21,8 | 21,2 | 20,7 | 20,2 | 19,3 | 17,4 | 15,1 | 12,4 | 9,3 |
| BNMS4 | NMS4 125/315C/A | - | - | 18,5 | 25 | | 28 | 27,9 | 27,9 | 27,7 | 27,5 | 27,2 | 26,5 | 25,6 | 24,9 | 24,1 | 22,8 | 20,1 | 17 | 13,5 | 9,5 |
| BNMS4 | NMS4 125/315B/A | - | - | 22 | 30 | | 31,9 | 31,8 | 31,7 | 31,6 | 31,4 | 31,1 | 30,5 | 29,8 | 29,2 | 28,5 | 27,3 | 24,9 | 22 | 18,4 | 14,3 |
| BNMS4 | NMS4 125/315A/A | - | - | 30 | 40 | | 36,4 | 36,8 | 36,8 | 36,7 | 36,6 | 36,4 | 35,9 | 35,2 | 34,7 | 34,2 | 33,2 | 31 | 28,4 | 25,3 | 21,6 |
| BNMS4 | NMS4 125/400C/A | - | - | 37 | 50 | | 45,5 | 45,3 | 45,5 | 45,5 | 45,3 | 45,1 | 44,4 | 43,5 | 42,7 | 41,8 | 40,2 | 37 | 33,1 | 28,6 | 23,4 |
| BNMS4 | NMS4 125/400B/A | - | - | 45 | 60 | | 51,8 | 51,4 | 51,3 | 51,2 | 51,1 | 50,9 | 50,4 | 49,7 | 49 | 48,2 | 46,8 | 44 | 40,5 | 36 | 31,5 |
| BNMS4 | NMS4 125/400A/A | - | - | 55 | 75 | | 59,2 | 59,2 | 59,1 | 59,1 | 58,9 | 58,7 | 58,3 | 57,7 | 57,2 | 56,6 | 55,6 | 53,4 | 50,5 | 46,8 | 42,3 |

### Three-phase

| | | | | Q = Flow | | | | | | | | | | | | | | | | | | | |
|---|---|---|---|---|---|---|---|---|---|---|---|---|---|---|---|---|---|---|---|---|---|---|---|
| | | | | m³/h | 0 | 132 | 150 | 168 | 180 | 192 | 210 | 240 | 270 | 300 | 330 | 360 | 390 | 420 | 450 | 480 | 540 | 600 | 660 |
| Model | | P2 | | l/min | | 2200 | 2500 | 2800 | 3000 | 3200 | 3500 | 4000 | 4500 | 5000 | 5500 | 6000 | 6500 | 7000 | 7500 | 8000 | 9000 | 10000 | 11000 |
| | | kW | HP | H (m) = Total head | | | | | | | | | | | | | | | | | | | |
| BNMS4 | NMS4 150/315D/B | 18,5 | 25 | | 22,4 | 23,1 | 22,8 | 22,5 | 22,2 | 21,9 | 21,3 | 20,3 | 19,1 | 17,8 | 16,4 | 15 | 13,5 | 11,9 | 10,2 | - | - | - | - |
| BNMS4 | NMS4 150/315C/B | 22 | 30 | | 25,9 | 26,7 | 26,4 | 26,1 | 25,8 | 25,4 | 24,9 | 23,8 | 22,5 | 21 | 19,5 | 17,9 | 16,2 | 14,5 | 12,7 | 10,8 | - | - | - |
| BNMS4 | NMS4 150/315B/B | 30 | 40 | | 24 | 25,3 | 25,2 | 25,1 | 25 | 24,9 | 24,7 | 24,3 | 23,8 | 23,2 | 22,4 | 21,6 | 20,8 | 19,8 | 18,7 | 17,6 | 15,1 | - | - |
| BNMS4 | NMS4 150/315A/B | 37 | 50 | | 28 | 29,5 | 29,5 | 29,5 | 29,5 | 29,4 | 29,3 | 29 | 28,6 | 28,1 | 27,5 | 26,7 | 25,9 | 24,9 | 23,8 | 22,6 | 19,9 | 16,7 | - |
| BNMS4 | NMS4 150/315S | 45 | 60 | | 33,5 | 34,9 | 34,9 | 34,9 | 34,9 | 34,8 | 34,7 | 34,5 | 34,1 | 33,6 | 33 | 32,2 | 31,4 | 30,4 | 29,4 | 28,2 | 25,5 | 22,3 | 18,7 |
| BNMS4 | NMS4 150/400B/B | 55 | 75 | | 39 | 42,2 | 42,3 | 42,3 | 42,2 | 42,2 | 42 | 41,6 | 41 | 40,3 | 39,5 | 38,6 | 37,5 | 36,4 | 35 | 33,5 | 29,8 | 25,4 | - |
| BNMS4 | NMS4 150/400A/B | 75 | 100 | | 50 | 52,5 | 52,6 | 52,6 | 52,6 | 52,5 | 52,4 | 52,2 | 51,8 | 51,3 | 50,6 | 49,6 | 48,5 | 47,2 | 45,8 | 44,2 | 40,6 | 36,7 | 32,2 |
| BNMS4 | NMS4 150/400S | 90 | 120 | | 58,6 | 60,8 | 60,9 | 61 | 61 | 61 | 61 | 60,7 | 60,3 | 59,6 | 58,8 | 57,7 | 56,4 | 54,9 | 53,2 | 51,4 | 47,3 | 42,7 | 37,6 |

**P2:** Rated motor power output.
**H:** Total head in m
Tolerances according to UNI EN ISO 9906:2012

# NM4

## Performance n ≈ 1450 rpm

### Rated current

| Motor | IE3 | | | IE4 | | |
|---|---|---|---|---|---|---|
| P2 | 400V | 690V | | 400V | 690V | |
| kW | A | A | Ia/In | A | A | Ia/In |
| 0.37 | 0.95 | - | 4.2 | - | - | - |
| 0.55 | 1.5 | - | 4.8 | - | - | - |
| 0.75 | 1.9 | - | 7.2 | 1.7 | - | 7.3 |
| 1.1 | 2.9 | - | 6.6 | 2.4 | - | 7.5 |
| 1.5 | 3.5 | - | 8.3 | 3.2 | - | 7.6 |
| 2.2 | 5 | - | 8.6 | 4.6 | - | 7.5 |
| 3 | 6.4 | - | 5.8 | 6.1 | - | 7.4 |
| 4 | 8.3 | 4.8 | 7.2 | 8.1 | 4.7 | 7.6 |
| 5.5 | 12.5 | 7.2 | 7.2 | 10.9 | 6.3 | 7.5 |
| 7.5 | 16 | 9.2 | 7.1 | 14.6 | 8.5 | 7.7 |
| 9.2 | 20.5 | 11.8 | 7.4 | - | - | - |
| 11 | 22.5 | 13 | 9.6 | 20.5 | 11.9 | 9.5 |
| 15 | 29 | 16.7 | 9.1 | 27.4 | 15.9 | 9.5 |
| 18.5 | 35 | 20.5 | 7.2 | 33.3 | 19.3 | 9.5 |
| 22 | 41 | 24 | 6.8 | 39.5 | 22.9 | 9.5 |
| 30 | 55 | 32 | 7.3 | 53.7 | 31.1 | 9 |
| 37 | 66 | 38.5 | 6.4 | 66 | 38.3 | 9 |
| 45 | 80 | 46.5 | 6.4 | 80.1 | 46.4 | 9 |
| 55 | 96 | 56 | 6.8 | 96.5 | 55.9 | 9 |
| 75 | 133 | 77 | 6.9 | 129.6 | 75.1 | 8.5 |
| 90 | - | - | - | 153.6 | 89 | 8.5 |

**A*:** Calpeda motor Standard
**Ia/In** D.O.L. starting current / Nominal current

# NMS4

## Coverage chart n ≈ 1450 rpm

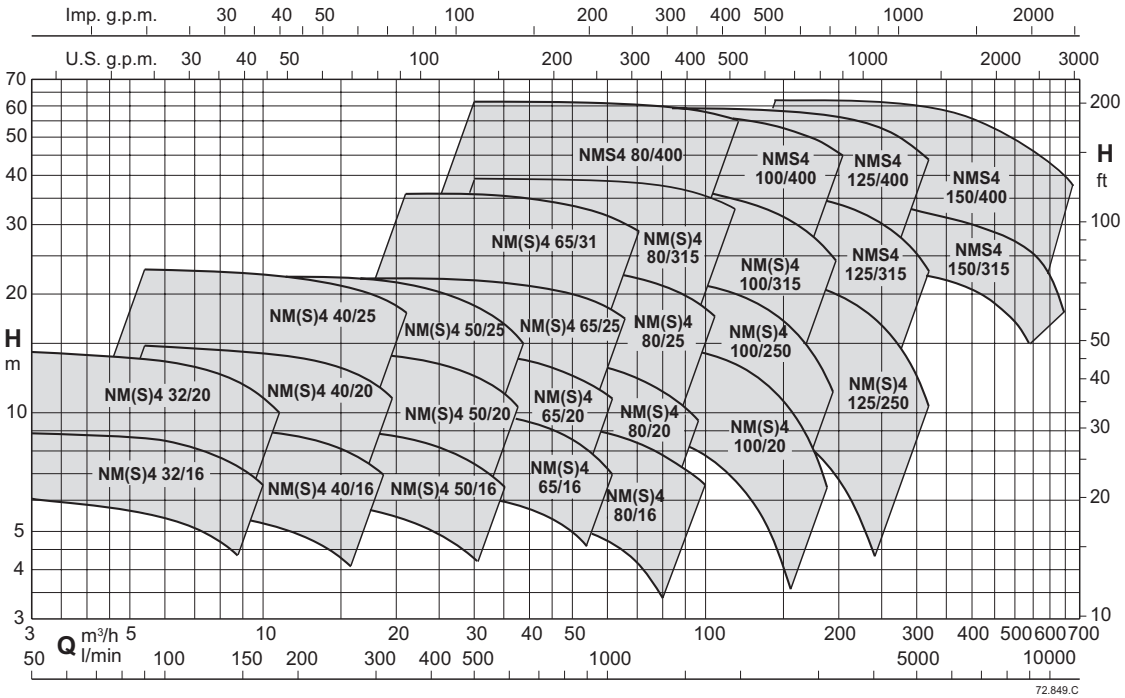


## Performance n ≈ 1450 rpm

### Three-phase

| | | | | Q = Flow | | | | | | | | | | | | | | |
|---|---|---|---|---|---|---|---|---|---|---|---|---|---|---|---|---|---|---|
| | | | | m³/h | 0 | 2,4 | 3 | 3,6 | 4,2 | 4,8 | 5,4 | 6 | 7,5 | 8,4 | 9,6 | 10,8 | 12 | 13,2 |
| Model | | P2 | | l/min | | 40 | 50 | 60 | 70 | 80 | 90 | 100 | 125 | 140 | 160 | 180 | 200 | 220 |
| | | kW | HP | H (m) = Total head | | | | | | | | | | | | | | |
| BNMS4 | NMS4 32/200A | 0,75 | 1 | | 14,2 | 14,3 | 14,2 | 14,2 | 14,1 | 13,9 | 13,7 | 13,5 | 12,8 | 12,2 | 11,3 | 10,3 | 9 | 7,4 |

### Three-phase

| | | | | Q = Flow | | | | | | | | | | | | | | | |
|---|---|---|---|---|---|---|---|---|---|---|---|---|---|---|---|---|---|---|---|
| | | | | m³/h | 0 | 5,4 | 6 | 7,5 | 8,4 | 9,6 | 10,8 | 12 | 13,2 | 15 | 16,8 | 18,9 | 21 | 24 | 27 | 30 |
| Model | | P2 | | l/min | | 90 | 100 | 125 | 140 | 160 | 180 | 200 | 220 | 250 | 280 | 315 | 350 | 400 | 450 | 500 |
| | | kW | HP | H (m) = Total head | | | | | | | | | | | | | | | |
| BNMS4 | NMS4 40/160A | 0,75 | 1 | | 9,4 | 9,6 | 9,6 | 9,6 | 9,4 | 9,3 | 9,1 | 9 | 8,8 | 8,4 | 7,9 | 7,2 | 6,4 | 5,1 | 3,5 | - |
| BNMS4 | NMS4 40/200B | 1,1 | 1,5 | | 13 | 13 | 12,9 | 12,7 | 12,6 | 12,4 | 12,2 | 12 | 11,5 | 10,8 | 10 | 8,6 | 7 | - | - | - |
| BNMS4 | NMS4 40/200A | 1,1 | 1,5 | | 14,9 | 14,8 | 14,7 | 14,5 | 14,4 | 14,2 | 14 | 13,8 | 13,6 | 13 | 12,2 | 11,3 | 10 | - | - | - |
| BNMS4 | NMS4 40/250C | 1,5 | 2 | | 17,2 | 17,4 | 17,3 | 17,2 | 17 | 16,8 | 16,6 | 16,3 | 16 | 15,1 | 13,8 | 12,1 | 10,4 | 7,2 | 2,8 | - |
| BNMS4 | NMS4 40/250B | 2,2 | 3 | | 21,4 | 21,4 | 21,5 | 21,3 | 21,2 | 21 | 20,9 | 20,8 | 20,5 | 20 | 19,5 | 18,3 | 16,4 | 13,3 | 10 | 5 |
| BNMS4 | NMS4 40/250A | 3 | 4 | | 22,8 | 22,9 | 22,8 | 22,9 | 22,8 | 22,5 | 22,5 | 22,2 | 22 | 21,8 | 21,4 | 20,4 | 18,9 | 16 | 12,6 | 8 |

**P2:** Rated motor power output.
**H:** Total head in m
Tolerances according to UNI EN ISO 9906:2012

# NMS4

## Performance n ≈ 1450 rpm

### Three-phase

| | | | | Q = Flow | | | | | | | | | | | | | | | |
|---|---|---|---|---|---|---|---|---|---|---|---|---|---|---|---|---|---|---|---|
| | | | | m³/h | 0 | 10,8 | 12 | 13,2 | 15 | 16,8 | 18,9 | 21 | 24 | 27 | 30 | 33 | 37,8 | 42 | 48 |
| Model | | P2 | | l/min | | 180 | 200 | 220 | 250 | 280 | 315 | 350 | 400 | 450 | 500 | 550 | 630 | 700 | 800 |
| | | kW | HP | H (m) = Total head | | | | | | | | | | | | | | | |
| BNMS4 | NMS4 50/160B | 1,1 | 1,5 | | 8 | 8,2 | 8,2 | 8,2 | 8,1 | 8 | 7,8 | 7,6 | 7,2 | 6,7 | 6,2 | 5,5 | 4,4 | 3,3 | - |
| BNMS4 | NMS4 50/160A | 1,1 | 1,5 | | 9,5 | 9,6 | 9,6 | 9,6 | 9,5 | 9,5 | 9,3 | 9,1 | 8,8 | 8,3 | 7,8 | 7,2 | 6,1 | 4,9 | 3,1 |
| BNMS4 | NMS4 50/200C | 1,1 | 1,5 | | 11,3 | 11,8 | 11,8 | 11,7 | 11,7 | 11,5 | 11,3 | 10,9 | 10,4 | 9,8 | 9 | 8,1 | 6,3 | 4,7 | - |
| BNMS4 | NMS4 50/200B | 1,5 | 2 | | 13 | 13,4 | 13,4 | 13,4 | 13,3 | 13,1 | 12,9 | 12,6 | 12,1 | 11,5 | 10,8 | 9,9 | 8,2 | 6,4 | 3,7 |
| BNMS4 | NMS4 50/200A | 2,2 | 3 | | 14,4 | 14,9 | 14,9 | 14,9 | 14,9 | 14,8 | 14,6 | 14,4 | 14 | 13,4 | 12,8 | 12 | 10,4 | 8,6 | 6 |
| BNMS4 | NMS4 50/250C | 2,2 | 3 | | 17,2 | 17,8 | 17,8 | 17,7 | 17,5 | 17,2 | 16,8 | 16,4 | 15,7 | 14,9 | 13,8 | 12,4 | 9,7 | 6,8 | - |
| BNMS4 | NMS4 50/250D | 2,2 | 3 | | 14,5 | 14,5 | 14,4 | 14,3 | 14 | 13,7 | 13,4 | 13 | 12,2 | 11,2 | 9,7 | 8,1 | 5,4 | 2,3 | - |
| BNMS4 | NMS4 50/250B | 3 | 4 | | 20,2 | 20,7 | 20,7 | 20,7 | 20,6 | 20,4 | 20 | 19,5 | 18,9 | 18,2 | 17,1 | 15,9 | 13,2 | 10,6 | 5,8 |
| BNMS4 | NMS4 50/250A | 4 | 5,5 | | 24,2 | 22,7 | 22,7 | 22,6 | 22,5 | 22,4 | 22,1 | 21,6 | 21 | 20,2 | 19,4 | 18,3 | 16,4 | 13,6 | 9 |

### Three-phase

| | | | | Q = Flow | | | | | | | | | | | | | | | |
|---|---|---|---|---|---|---|---|---|---|---|---|---|---|---|---|---|---|---|---|
| | | | | m³/h | 0 | 21 | 24 | 27 | 30 | 33 | 37,8 | 42 | 48 | 54 | 60 | 66 | 75 | 84 | 96 |
| Model | | P2 | | l/min | | 350 | 400 | 450 | 500 | 550 | 630 | 700 | 800 | 900 | 1000 | 1100 | 1250 | 1400 | 1600 |
| | | kW | HP | H (m) = Total head | | | | | | | | | | | | | | | |
| BNMS4 | NMS4 65/160C | 1,1 | 1,5 | | 6,4 | 6,1 | 6,1 | 6 | 6 | 5,9 | 5,8 | 5,6 | 5,3 | 4,8 | 4,2 | - | - | - | - |
| BNMS4 | NMS4 65/160B | 1,1 | 1,5 | | 7,4 | 7,2 | 7,1 | 7,1 | 7 | 7 | 6,8 | 6,6 | 6,3 | 5,8 | 5,2 | 4,5 | - | - | - |
| BNMS4 | NMS4 65/160A | 1,5 | 2 | | 8,8 | 8,8 | 8,8 | 8,7 | 8,7 | 8,6 | 8,5 | 8,3 | 8 | 7,6 | 7,1 | 6,4 | 5,2 | - | - |
| BNMS4 | NMS4 65/160S | 2,2 | 3 | | 9,9 | 10,2 | 10,2 | 10,1 | 10,1 | 10 | 9,9 | 9,7 | 9,4 | 9,1 | 8,6 | 8 | 7 | 5,7 | - |
| BNMS4 | NMS4 65/200B | 2,2 | 3 | | 11,1 | 11,7 | 11,7 | 11,6 | 11,6 | 11,5 | 11,3 | 11 | 10,6 | 10,1 | 9,5 | 8,7 | 7,4 | 5,8 | 3,3 |
| BNMS4 | NMS4 65/200A | 3 | 4 | | 13,8 | 14,2 | 14,2 | 14,2 | 14,1 | 14,1 | 13,9 | 13,7 | 13,4 | 13 | 12,5 | 11,8 | 10,7 | 9,3 | 7 |
| BNMS4 | NMS4 65/250B | 4 | 5,5 | | 16,5 | 17,9 | 18 | 18 | 18 | 18 | 17,8 | 17,5 | 17 | 16,3 | 15,4 | 14,4 | 12,5 | 10,4 | 7 |
| BNMS4 | NMS4 65/250A | 5,5 | 7,5 | | 21 | 22,2 | 22,3 | 22,4 | 22,4 | 22,4 | 22,2 | 22 | 21,6 | 21 | 20,2 | 19,3 | 17,6 | 15,7 | 12,6 |
| BNMS4 | NMS4 65/315C | 5,5 | 7,5 | | 26 | 25,8 | 25,7 | 25,5 | 25,3 | 25 | 24,4 | 23,8 | 22,8 | 21,5 | 20 | 18,2 | 15 | 11 | - |
| BNMS4 | NMS4 65/315B | 7,5 | 10 | | 31 | 31 | 31 | 30,9 | 30,8 | 30,6 | 30,2 | 29,7 | 28,8 | 27,8 | 26,5 | 25 | 22,2 | 18,6 | - |
| BNMS4 | NMS4 65/315A | 11 | 15 | | 36 | 35,9 | 35,9 | 35,8 | 35,7 | 35,5 | 35,1 | 34,6 | 33,8 | 32,8 | 31,6 | 30,2 | 27,8 | 25 | - |

### Three-phase

| | | | | Q = Flow | | | | | | | | | | | | | | | | | | |
|---|---|---|---|---|---|---|---|---|---|---|---|---|---|---|---|---|---|---|---|---|---|---|
| | | | | m³/h | 0 | 30 | 33 | 37,8 | 42 | 48 | 54 | 60 | 66 | 75 | 84 | 96 | 108 | 120 | 132 | 150 | 168 | 180 |
| Model | | P2 | | l/min | | 500 | 550 | 630 | 700 | 800 | 900 | 1000 | 1100 | 1250 | 1400 | 1600 | 1800 | 2000 | 2200 | 2500 | 2800 | 3000 |
| | | kW | HP | H (m) = Total head | | | | | | | | | | | | | | | | | | |
| BNMS4 | NMS4 80/160C | 1,1 | 1,5 | | 6,5 | 6,1 | 6,1 | 5,9 | 5,8 | 5,5 | 5,2 | 4,9 | 4,6 | 4 | 3,3 | - | - | - | - | - | - | - |
| BNMS4 | NMS4 80/160B | 1,5 | 2 | | 8,2 | 7,8 | 7,7 | 7,6 | 7,5 | 7,3 | 7 | 6,8 | 6,4 | 5,9 | 5,2 | 4,1 | - | - | - | - | - | - |
| BNMS4 | NMS4 80/160A | 2,2 | 3 | | 10,1 | 10 | 10 | 9,9 | 9,8 | 9,7 | 9,5 | 9,3 | 9 | 8,5 | 8 | 7 | 5,9 | - | - | - | - | - |
| BNMS4 | NMS4 80/200C | 2,2 | 3 | | 8,7 | 9 | 9 | 8,9 | 8,8 | 8,7 | 8,5 | 8,2 | 7,9 | 7,4 | 6,8 | 5,7 | 4,3 | 2,7 | - | - | - | - |
| BNMS4 | NMS4 80/200B | 3 | 4 | | 11,2 | 11,7 | 11,7 | 11,7 | 11,6 | 11,5 | 11,3 | 11,1 | 10,8 | 10,3 | 9,7 | 8,7 | 7,4 | 5,9 | - | - | - | - |
| BNMS4 | NMS4 80/200A | 4 | 5,5 | | 13,8 | 14,2 | 14,2 | 14,1 | 14 | 13,9 | 13,7 | 13,5 | 13,2 | 12,7 | 12,1 | 11,1 | 9,9 | 8,5 | 6,9 | - | - | - |
| BNMS4 | NMS4 80/250C | 4 | 5,5 | | 17 | 16,9 | 16,8 | 16,7 | 16,6 | 16,3 | 15,9 | 15,4 | 14,8 | 13,9 | 12,7 | 11,1 | 9,3 | 7,2 | - | - | - | - |
| BNMS4 | NMS4 80/250B | 5,5 | 7,5 | | 20,8 | 20,7 | 20,7 | 20,6 | 20,5 | 20,3 | 20 | 19,6 | 19,1 | 18,2 | 17,1 | 15,4 | 13,5 | 11,4 | 9 | - | - | - |
| BNMS4 | NMS4 80/250A | 7,5 | 10 | | 23,8 | 23,7 | 23,7 | 23,6 | 23,5 | 23,3 | 23 | 22,7 | 22,2 | 21,5 | 20,5 | 19 | 17,2 | 15,1 | 12,7 | - | - | - |
| BNMS4 | NMS4 80/315C | 11 | 15 | | 24,2 | 25,7 | 25,8 | 25,8 | 25,8 | 25,8 | 25,6 | 25,4 | 25,1 | 24,4 | 23,6 | 22,2 | 20,4 | 18,3 | 15,9 | - | - | - |
| BNMS4 | NMS4 80/315B/A | 11 | 15 | | 28,3 | 30,3 | 30,5 | 30,6 | 30,7 | 30,7 | 30,7 | 30,5 | 30,2 | 29,6 | 28,8 | 27,5 | 25,9 | 24,1 | 22 | - | - | - |
| BNMS4 | NMS4 80/315A | 15 | 20 | | 34,8 | 36,3 | 36,4 | 36,5 | 36,5 | 36,6 | 36,5 | 36,3 | 36,1 | 35,7 | 35 | 33,9 | 32,5 | 30,9 | 28,9 | 25,4 | - | - |
| BNMS4 | NMS4 80/315S | 18,5 | 25 | | 38 | 39,1 | 39,2 | 39,3 | 39,4 | 39,5 | 39,4 | 39,3 | 39,2 | 38,7 | 38,1 | 37,1 | 35,7 | 34,1 | 32,1 | 28,3 | 22,5 | - |
| BNMS4 | NMS4 80/400C/B | 18,5 | 25 | | 42 | 42,8 | 42,8 | 42,9 | 42,9 | 42,7 | 42,5 | 42,2 | 41,8 | 40,9 | 39,8 | 37,9 | 35,4 | 32,5 | 29 | - | - | - |
| BNMS4 | NMS4 80/400B/B | 22 | 30 | | 47 | 48,2 | 48,2 | 48,2 | 48,2 | 48,1 | 47,9 | 47,7 | 47,3 | 46,6 | 45,7 | 44,1 | 42,1 | 39,5 | 36,3 | 30,5 | - | - |
| BNMS4 | NMS4 80/400A/B | 30 | 40 | | 60 | 61,4 | 61,5 | 61,5 | 61,6 | 61,5 | 61,5 | 61,3 | 61,1 | 60,7 | 60,1 | 59 | 57,6 | 55,8 | 53,6 | 49,5 | - | - |
| BNMS4 | NMS4 80/400S | 37 | 50 | | 60 | 61,4 | 61,5 | 61,5 | 61,6 | 61,6 | 61,5 | 61,3 | 61,1 | 60,7 | 60,1 | 59 | 57,6 | 55,8 | 53,7 | 49,5 | 43,9 | 39,2 |

**P2:** Rated motor power output.
**H:** Total head in m
Tolerances according to UNI EN ISO 9906:2012

# NMS4

## Performance n ≈ 1450 rpm

### Three-phase

| | | | | Q = Flow | | | | | | | | | | | | | | | | | |
|---|---|---|---|---|---|---|---|---|---|---|---|---|---|---|---|---|---|---|---|---|---|
| | | | | m³/h | 0 | 48 | 54 | 60 | 66 | 75 | 84 | 96 | 108 | 120 | 132 | 150 | 168 | 180 | 192 | 210 |
| Model | | P2 | | l/min | | 800 | 900 | 1000 | 1100 | 1250 | 1400 | 1600 | 1800 | 2000 | 2200 | 2500 | 2800 | 3000 | 3200 | 3500 |
| | | kW | HP | H (m) = Total head | | | | | | | | | | | | | | | | |
| BNMS4 | NMS4 100/200C | 3 | 4 | | 9,3 | 9,4 | 9,3 | 9,2 | 9,1 | 8,8 | 8,5 | 8 | 7,3 | 6,5 | 5,6 | 4 | - | - | - | - |
| BNMS4 | NMS4 100/200B | 4 | 5,5 | | 12 | 12 | 11,9 | 11,8 | 11,7 | 11,5 | 11,2 | 10,7 | 10,1 | 9,3 | 8,4 | 6,7 | 4,5 | - | - | - |
| BNMS4 | NMS4 100/200A | 5,5 | 7,5 | | 15,1 | 15,2 | 15,2 | 15,1 | 15,1 | 14,9 | 14,7 | 14,3 | 13,7 | 13,1 | 12,2 | 10,8 | 8,9 | 7,5 | 6 | - |
| BNMS4 | NMS4 100/250B | 7,5 | 10 | | 19,3 | 19,5 | 19,5 | 19,4 | 19,3 | 19,1 | 18,7 | 18,2 | 17,5 | 16,6 | 15,6 | 13,8 | 11,7 | 10,1 | 8,4 | 5,5 |
| BNMS4 | NMS4 100/250A/A | 11 | 15 | | 22,1 | 22,3 | 22,3 | 22,2 | 22,1 | 21,9 | 21,7 | 21,2 | 20,5 | 19,8 | 18,8 | 17,1 | 15 | 13,4 | 11,7 | 8,9 |
| BNMS4 | NMS4 100/315C/A | 11 | 15 | | 26,8 | 26,9 | 26,8 | 26,7 | 26,5 | 26,2 | 25,7 | 24,9 | 23,9 | 22,7 | 21,3 | 18,8 | 15,9 | 13,7 | 11,3 | - |
| BNMS4 | NMS4 100/315B/A | 15 | 20 | | 31,8 | 31,5 | 31,5 | 31,5 | 31,4 | 31,2 | 30,8 | 30,2 | 29,3 | 28,2 | 26,9 | 24,6 | 21,9 | 19,8 | 17,6 | 14 |
| BNMS4 | NMS4 100/315A/A | 18,5 | 25 | | 36,8 | 36,8 | 36,9 | 36,9 | 36,9 | 36,7 | 36,4 | 35,9 | 35,2 | 34,4 | 33,3 | 31,4 | 29,1 | 27,3 | 25,4 | 22,1 |
| BNMS4 | NMS4 100/400C/A | 22 | 30 | | 41,5 | 41,3 | 41,2 | 41,2 | 41 | 40,8 | 40,4 | 39,8 | 38,9 | 37,8 | 36,5 | 34,1 | 31,1 | 28,7 | 26 | - |
| BNMS4 | NMS4 100/400B/A | 30 | 40 | | 50 | 50,2 | 50,1 | 50,1 | 49,9 | 49,7 | 49,4 | 48,8 | 48 | 47,1 | 46 | 43,9 | 41,4 | 39,4 | 37,2 | 33,4 |
| BNMS4 | NMS4 100/400A/A | 37 | 50 | | 58 | 58,2 | 58,1 | 58,1 | 58 | 57,8 | 57,6 | 57 | 56,4 | 55,5 | 54,6 | 52,8 | 50,6 | 48,9 | 47,1 | 44 |

### Three-phase

| | | | | Q = Flow | | | | | | | | | | | | | | | | |
|---|---|---|---|---|---|---|---|---|---|---|---|---|---|---|---|---|---|---|---|---|
| | | | | m³/h | 0 | 84 | 96 | 108 | 120 | 132 | 150 | 168 | 180 | 192 | 210 | 240 | 270 | 300 | 330 |
| Model | | P2 | | l/min | | 1400 | 1600 | 1800 | 2000 | 2200 | 2500 | 2800 | 3000 | 3200 | 3500 | 4000 | 4500 | 5000 | 5500 |
| | | kW | HP | H (m) = Total head | | | | | | | | | | | | | | | |
| BNMS4 | NMS4 125/250E | 5,5 | 7,5 | | 11 | 11 | 10,8 | 10,5 | 10,1 | 9,7 | 9,1 | 8,3 | 7,8 | 7,2 | 6,2 | 4,4 | - | - | - |
| BNMS4 | NMS4 125/250D | 7,5 | 10 | | 14 | 14 | 13,9 | 13,7 | 13,4 | 13 | 12,4 | 11,6 | 11 | 10,4 | 9,4 | 7,4 | 5,1 | - | - |
| BNMS4 | NMS4 125/250C/A | 11 | 15 | | 16,8 | 16,7 | 16,6 | 16,5 | 16,2 | 15,9 | 15,4 | 14,6 | 14,1 | 13,5 | 12,4 | 10,5 | 8,2 | 5,8 | - |
| BNMS4 | NMS4 125/250B/A | 11 | 15 | | 19,1 | 19,3 | 19,2 | 19,1 | 18,9 | 18,7 | 18,2 | 17,5 | 16,9 | 16,3 | 15,3 | 13,3 | 10,9 | 8,2 | - |
| BNMS4 | NMS4 125/250A/A | 15 | 20 | | 22,8 | 22,7 | 22,7 | 22,6 | 22,4 | 22,2 | 21,8 | 21,2 | 20,7 | 20,2 | 19,3 | 17,4 | 15,1 | 12,4 | 9,3 |
| BNMS4 | NMS4 125/315C/A | 18,5 | 25 | | 28 | 27,9 | 27,9 | 27,7 | 27,5 | 27,2 | 26,5 | 25,6 | 24,9 | 24,1 | 22,8 | 20,1 | 17 | 13,5 | 9,5 |
| BNMS4 | NMS4 125/315B/A | 22 | 30 | | 31,9 | 31,8 | 31,7 | 31,6 | 31,4 | 31,1 | 30,5 | 29,8 | 29,2 | 28,5 | 27,3 | 24,9 | 22 | 18,4 | 14,3 |
| BNMS4 | NMS4 125/315A/A | 30 | 40 | | 36,4 | 36,8 | 36,8 | 36,7 | 36,6 | 36,4 | 35,9 | 35,2 | 34,7 | 34,2 | 33,2 | 31 | 28,4 | 25,3 | 21,6 |
| BNMS4 | NMS4 125/400C/A | 37 | 50 | | 45,5 | 45,3 | 45,5 | 45,5 | 45,3 | 45,1 | 44,4 | 43,5 | 42,7 | 41,8 | 40,2 | 37 | 33,1 | 28,6 | 23,4 |
| BNMS4 | NMS4 125/400B/A | 45 | 60 | | 51,8 | 51,4 | 51,3 | 51,2 | 51,1 | 50,9 | 50,4 | 49,7 | 49 | 48,2 | 46,8 | 44 | 40,5 | 36 | 31,5 |
| BNMS4 | NMS4 125/400A/A | 55 | 75 | | 59,2 | 59,2 | 59,1 | 59,1 | 58,9 | 58,7 | 58,3 | 57,7 | 57,2 | 56,6 | 55,6 | 53,4 | 50,5 | 46,8 | 42,3 |

### Three-phase

| | | | | Q = Flow | | | | | | | | | | | | | | | | | | |
|---|---|---|---|---|---|---|---|---|---|---|---|---|---|---|---|---|---|---|---|---|---|---|
| | | | | m³/h | 0 | 132 | 150 | 168 | 180 | 192 | 210 | 240 | 270 | 300 | 330 | 360 | 390 | 420 | 450 | 480 | 540 | 600 | 660 |
| Model | | P2 | | l/min | | 2200 | 2500 | 2800 | 3000 | 3200 | 3500 | 4000 | 4500 | 5000 | 5500 | 6000 | 6500 | 7000 | 7500 | 8000 | 9000 | 10000 | 11000 |
| | | kW | HP | H (m) = Total head | | | | | | | | | | | | | | | | | | | |
| BNMS4 | NMS4 150/315D/B | 18,5 | 25 | | 22,4 | 23,1 | 22,8 | 22,5 | 22,2 | 21,9 | 21,3 | 20,3 | 19,1 | 17,8 | 16,4 | 15 | 13,5 | 11,9 | 10,2 | - | - | - | - |
| BNMS4 | NMS4 150/315C/B | 22 | 30 | | 25,9 | 26,7 | 26,4 | 26,1 | 25,8 | 25,4 | 24,9 | 23,8 | 22,5 | 21 | 19,5 | 17,9 | 16,2 | 14,5 | 12,7 | 10,8 | - | - | - |
| BNMS4 | NMS4 150/315B/B | 30 | 40 | | 24 | 25,3 | 25,2 | 25,1 | 25 | 24,9 | 24,7 | 24,3 | 23,8 | 23,2 | 22,4 | 21,6 | 20,8 | 19,8 | 18,7 | 17,6 | 15,1 | - | - |
| BNMS4 | NMS4 150/315A/B | 37 | 50 | | 28 | 29,5 | 29,5 | 29,5 | 29,5 | 29,4 | 29,3 | 29 | 28,6 | 28,1 | 27,5 | 26,7 | 25,9 | 24,9 | 23,8 | 22,6 | 19,9 | 16,7 | - |
| BNMS4 | NMS4 150/315S | 45 | 60 | | 33,5 | 34,9 | 34,9 | 34,9 | 34,9 | 34,8 | 34,7 | 34,5 | 34,1 | 33,6 | 33 | 32,2 | 31,4 | 30,4 | 29,4 | 28,2 | 25,5 | 22,3 | 18,7 |
| BNMS4 | NMS4 150/400B/B | 55 | 75 | | 39 | 42,2 | 42,3 | 42,3 | 42,2 | 42,2 | 42 | 41,6 | 41 | 40,3 | 39,5 | 38,6 | 37,5 | 36,4 | 35 | 33,5 | 29,8 | 25,4 | - |
| BNMS4 | NMS4 150/400A/B | 75 | 100 | | 50 | 52,5 | 52,6 | 52,6 | 52,6 | 52,5 | 52,4 | 52,2 | 51,8 | 51,3 | 50,6 | 49,6 | 48,5 | 47,2 | 45,8 | 44,2 | 40,6 | 36,7 | 32,2 |
| BNMS4 | NMS4 150/400S | 90 | 120 | | 58,6 | 60,8 | 60,9 | 61 | 61 | 61 | 61 | 60,7 | 60,3 | 59,6 | 58,8 | 57,7 | 56,4 | 54,9 | 53,2 | 51,4 | 47,3 | 42,7 | 37,6 |

**P2:** Rated motor power output.
**H:** Total head in m
Tolerances according to UNI EN ISO 9906:2012

# NMS4

## Performance n ≈ 1450 rpm

### Rated current

| Motor | IE3 | | | IE4 | | |
|---|---|---|---|---|---|---|
| P2 | 400V | 690V | | 400V | 690V | |
| kW | A | A | Ia/In | A | A | Ia/In |
| 0.37 | 0.95 | - | 4.2 | - | - | - |
| 0.55 | 1.5 | - | 4.8 | - | - | - |
| 0.75 | 1.9 | - | 7.2 | 1.7 | - | 7.3 |
| 1.1 | 2.9 | - | 6.6 | 2.4 | - | 7.5 |
| 1.5 | 3.5 | - | 8.3 | 3.2 | - | 7.6 |
| 2.2 | 5 | - | 8.6 | 4.6 | - | 7.5 |
| 3 | 6.4 | - | 5.8 | 6.1 | - | 7.4 |
| 4 | 8.3 | 4.8 | 7.2 | 8.1 | 4.7 | 7.6 |
| 5.5 | 12.5 | 7.2 | 7.2 | 10.9 | 6.3 | 7.5 |
| 7.5 | 16 | 9.2 | 7.1 | 14.6 | 8.5 | 7.7 |
| 9.2 | 20.5 | 11.8 | 7.4 | - | - | - |
| 11 | 22.5 | 13 | 9.6 | 20.5 | 11.9 | 9.5 |
| 15 | 29 | 16.7 | 9.1 | 27.4 | 15.9 | 9.5 |
| 18.5 | 35 | 20.5 | 7.2 | 33.3 | 19.3 | 9.5 |
| 22 | 41 | 24 | 6.8 | 39.5 | 22.9 | 9.5 |
| 30 | 55 | 32 | 7.3 | 53.7 | 31.1 | 9 |
| 37 | 66 | 38.5 | 6.4 | 66 | 38.3 | 9 |
| 45 | 80 | 46.5 | 6.4 | 80.1 | 46.4 | 9 |
| 55 | 96 | 56 | 6.8 | 96.5 | 55.9 | 9 |
| 75 | 133 | 77 | 6.9 | 129.6 | 75.1 | 8.5 |
| 90 | - | - | - | 153.6 | 89 | 8.5 |

**A*:** Calpeda motor Standard
**Ia/In** D.O.L. starting current / Nominal current

# NM, NMS

## Characteristic curves n ≈ 2900 rpm

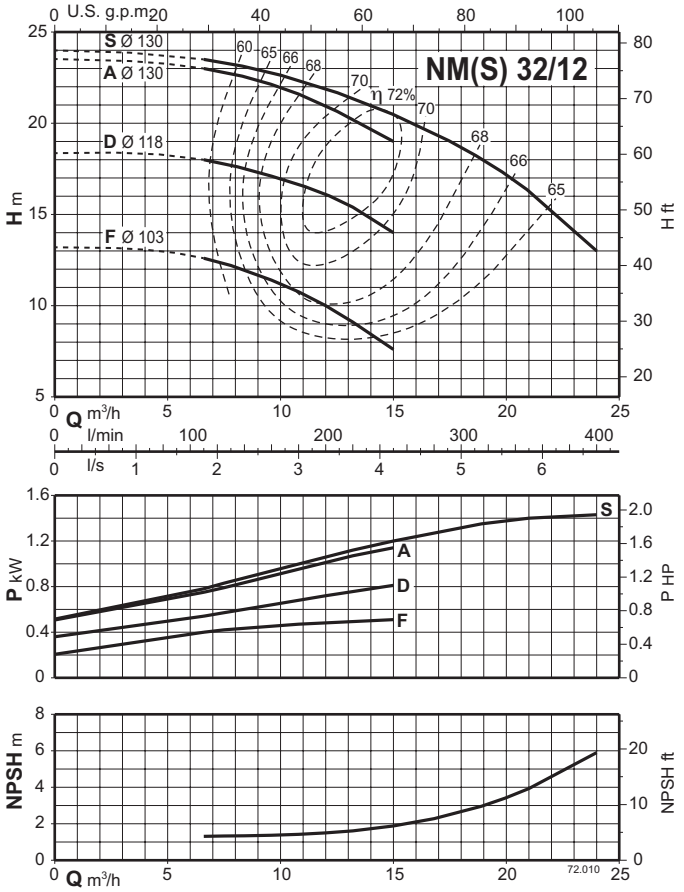


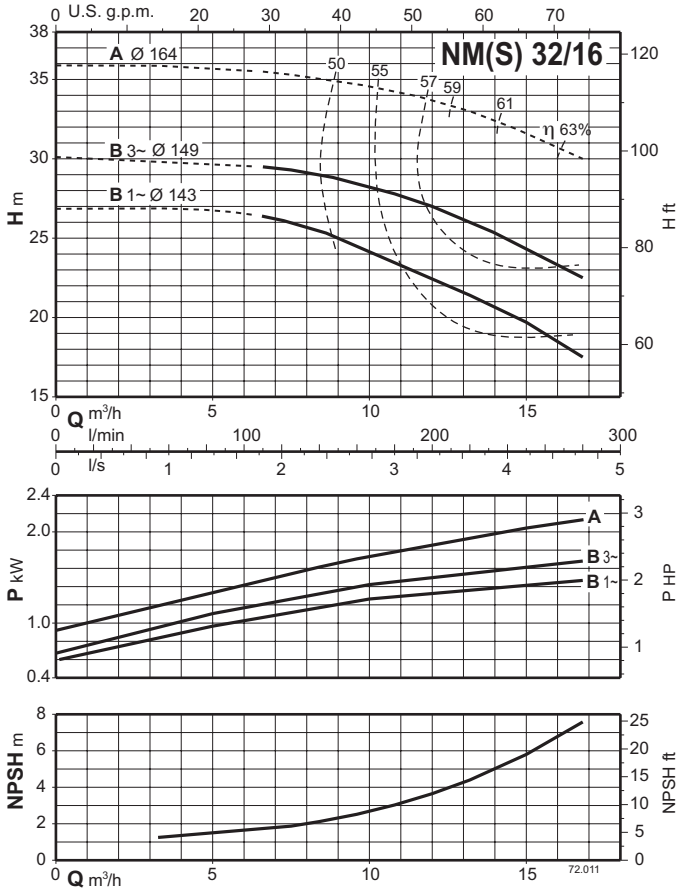


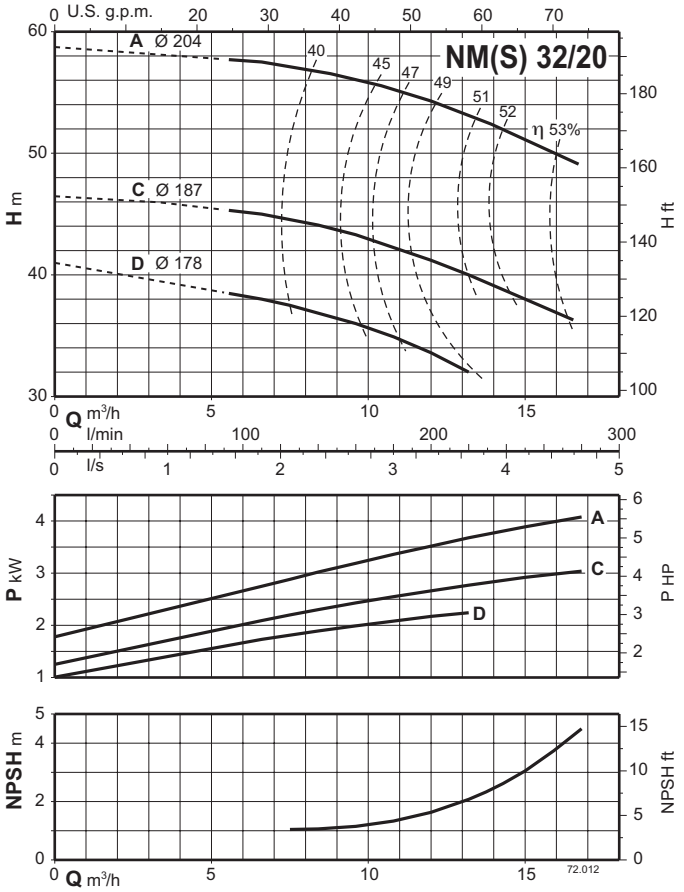


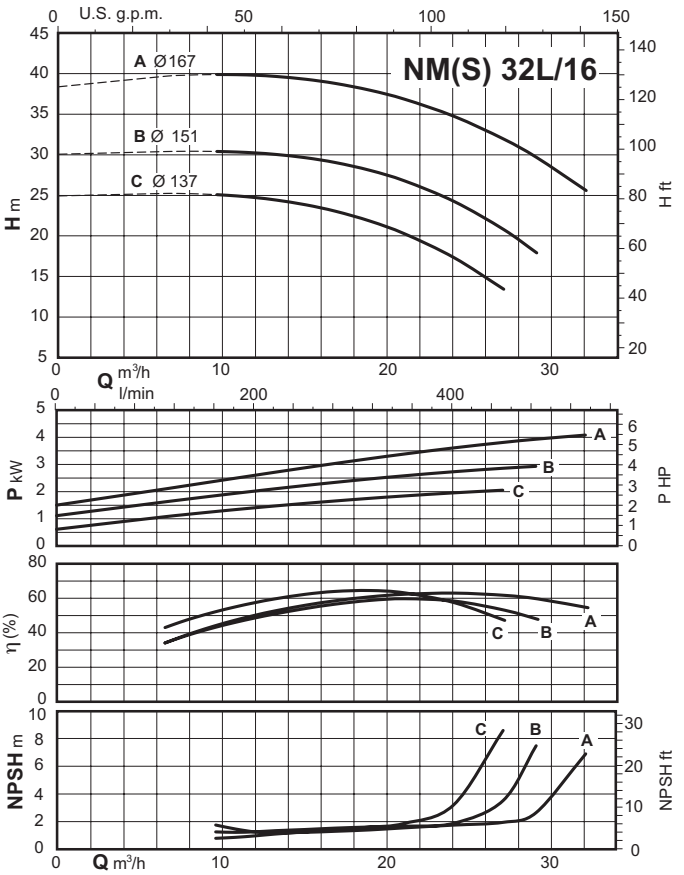

# NM, NMS

## Characteristic curves n ≈ 2900 rpm

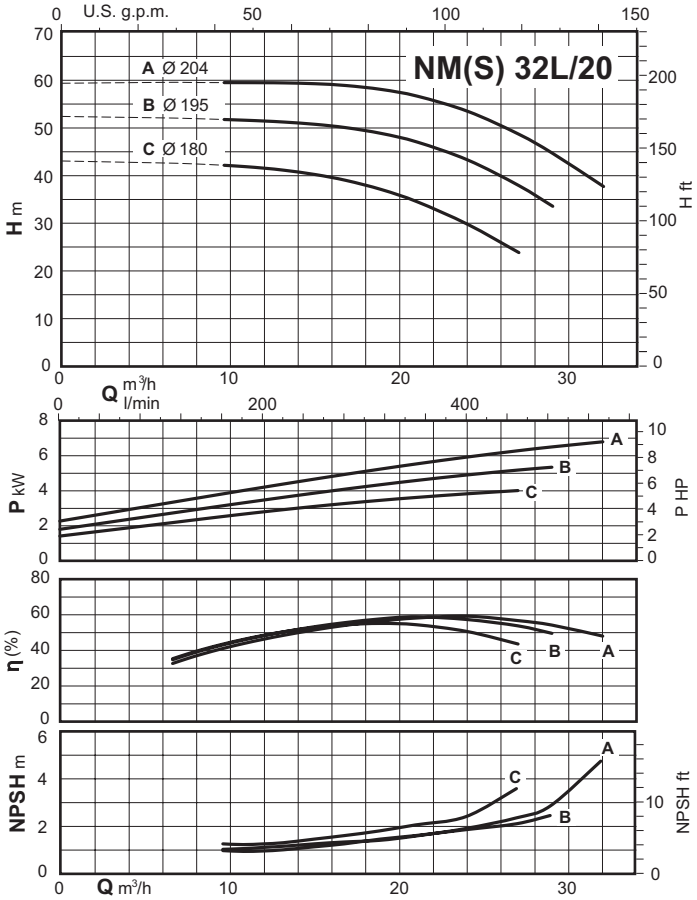


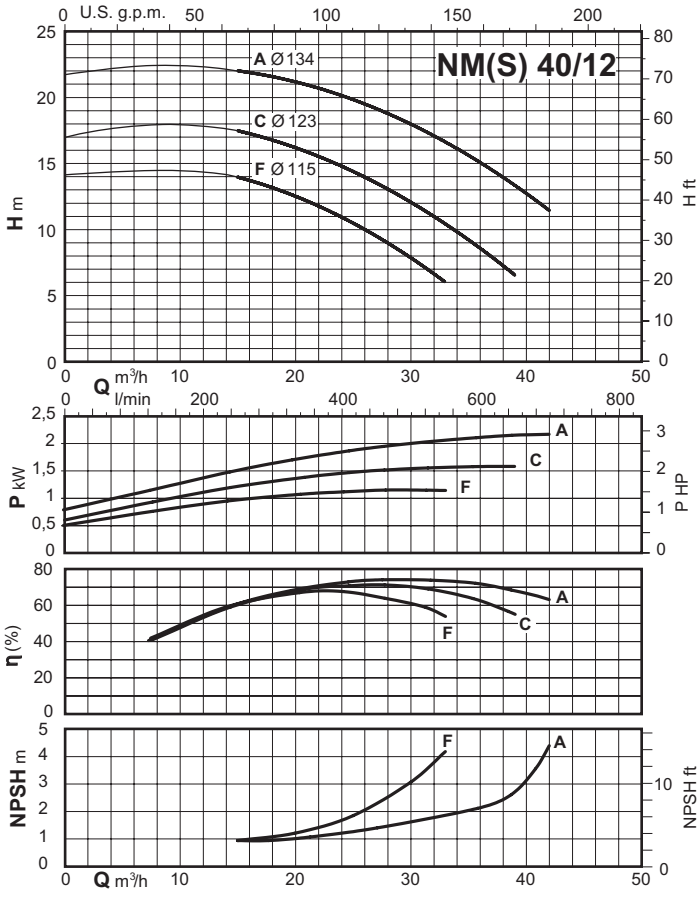


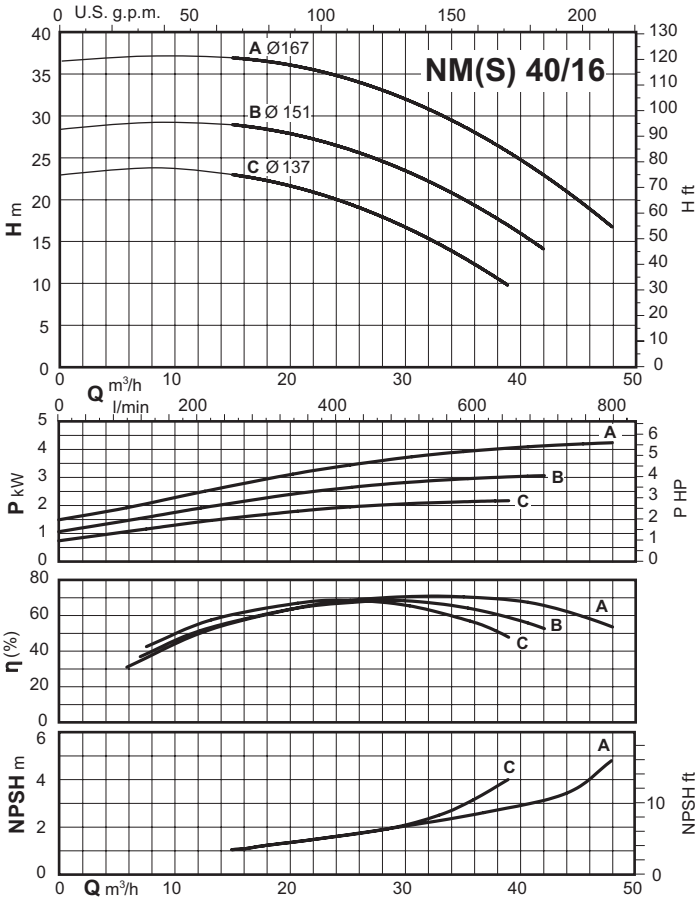


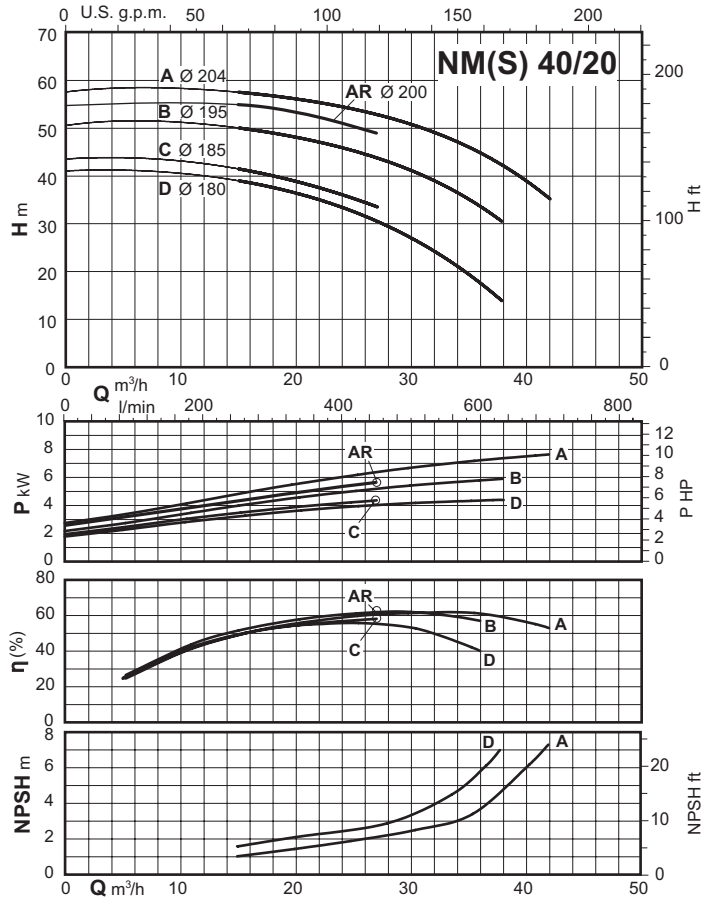

# NM, NMS

## Characteristic curves n ≈ 2900 rpm

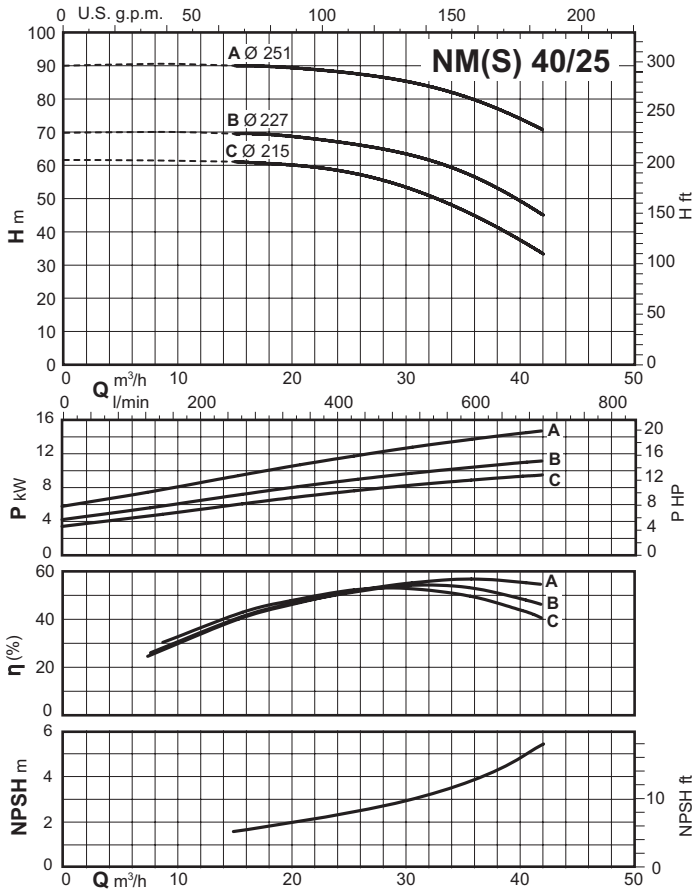


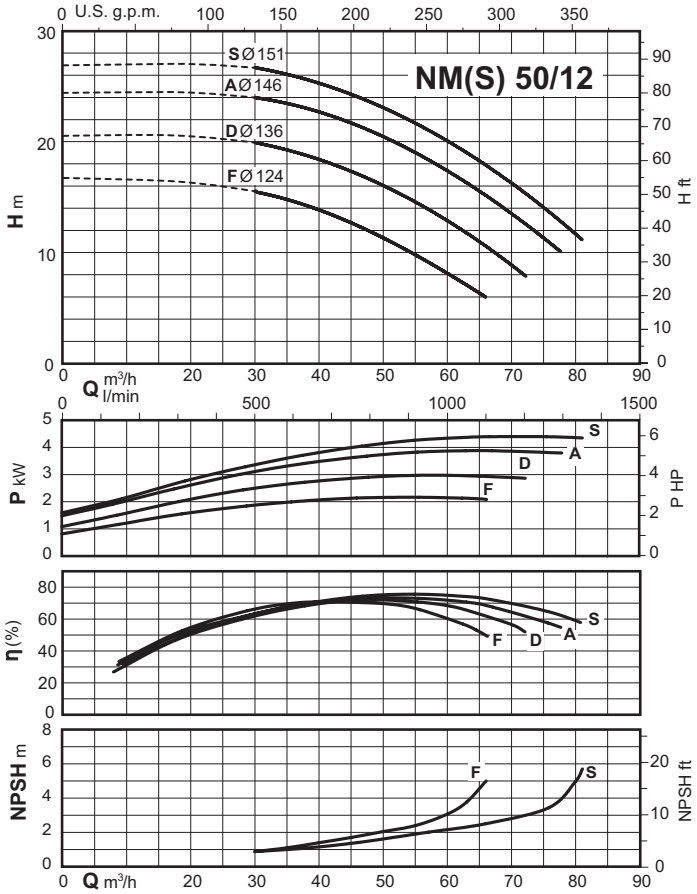


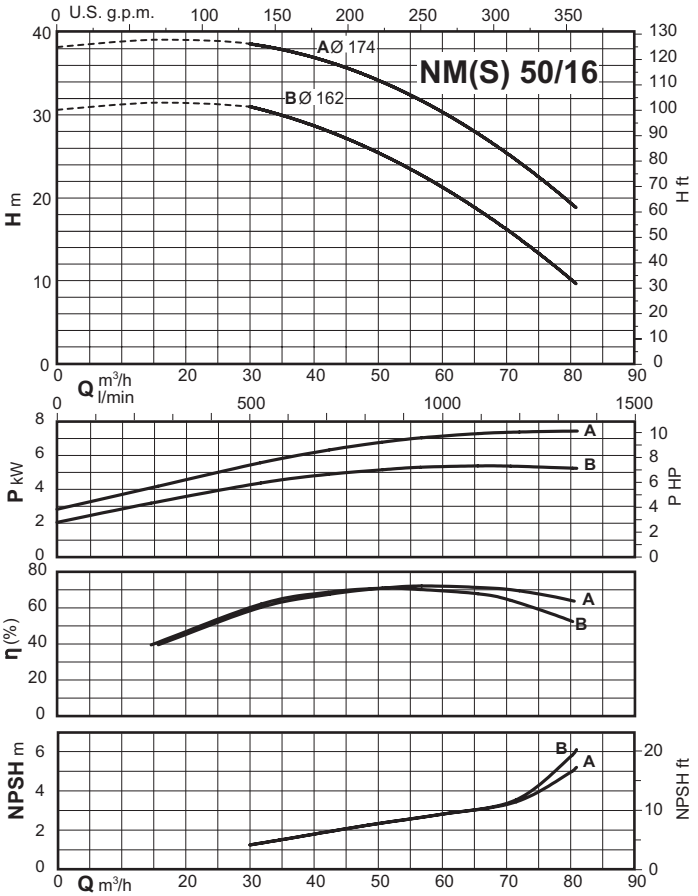


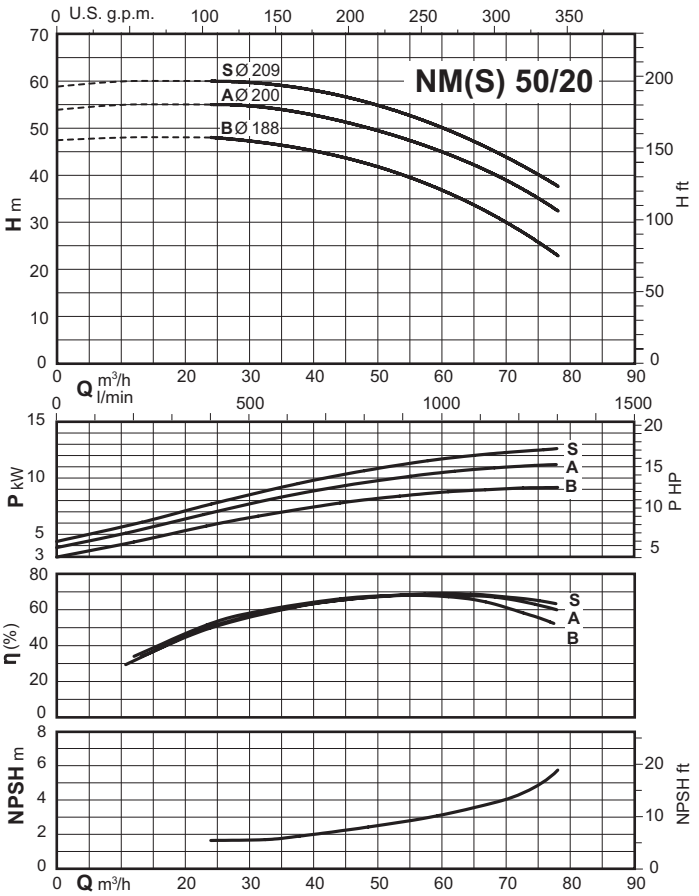

# NM, NMS

## Characteristic curves n ≈ 2900 rpm

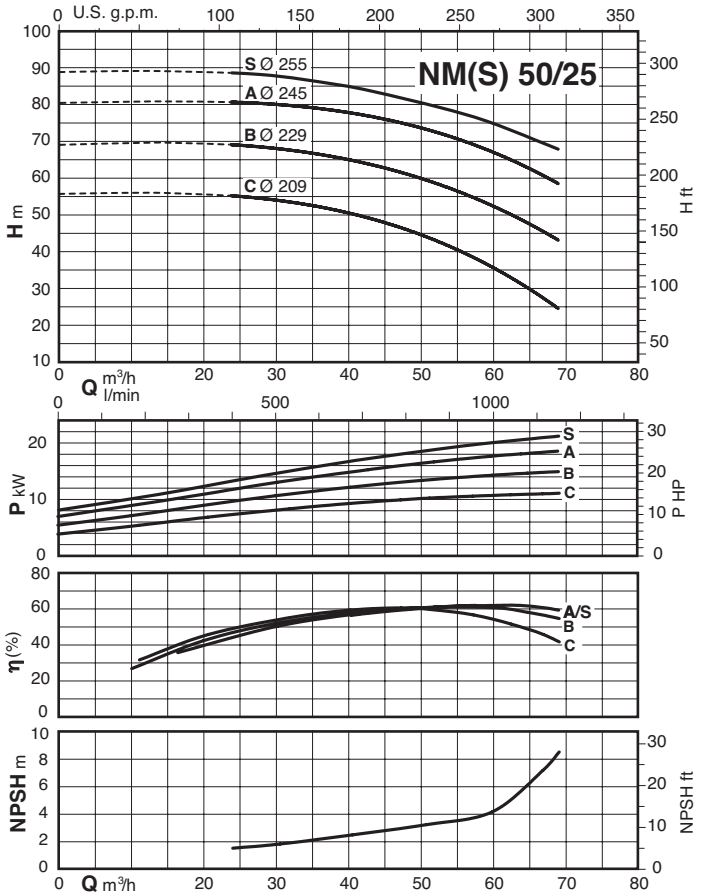


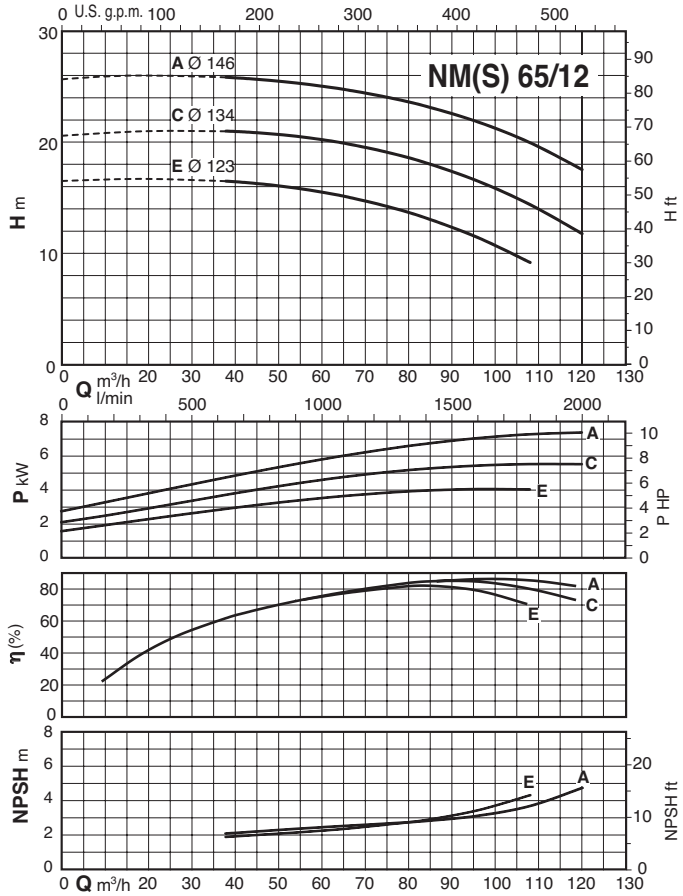


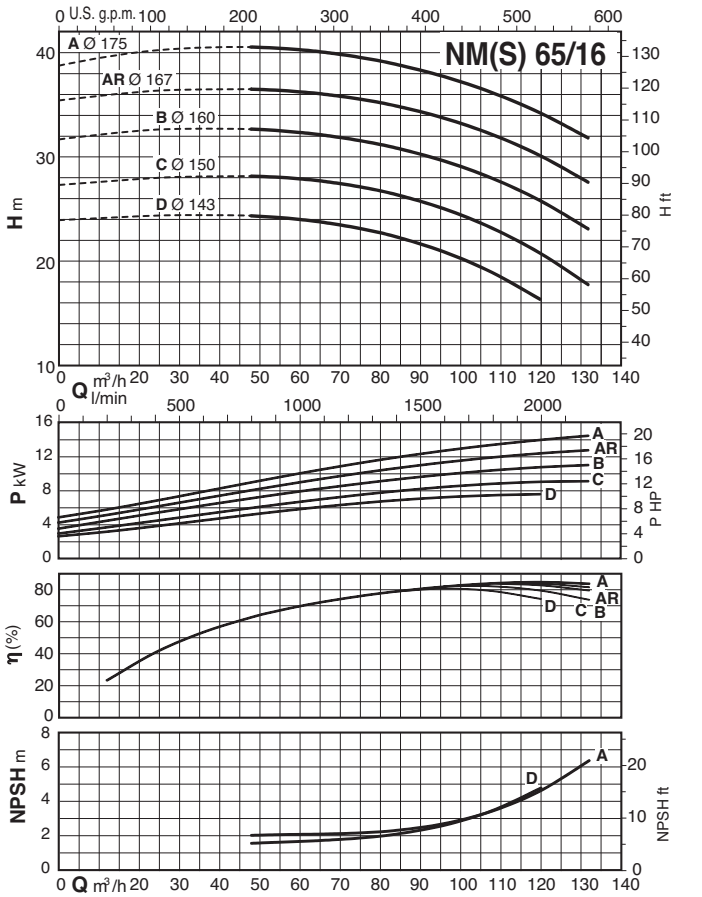


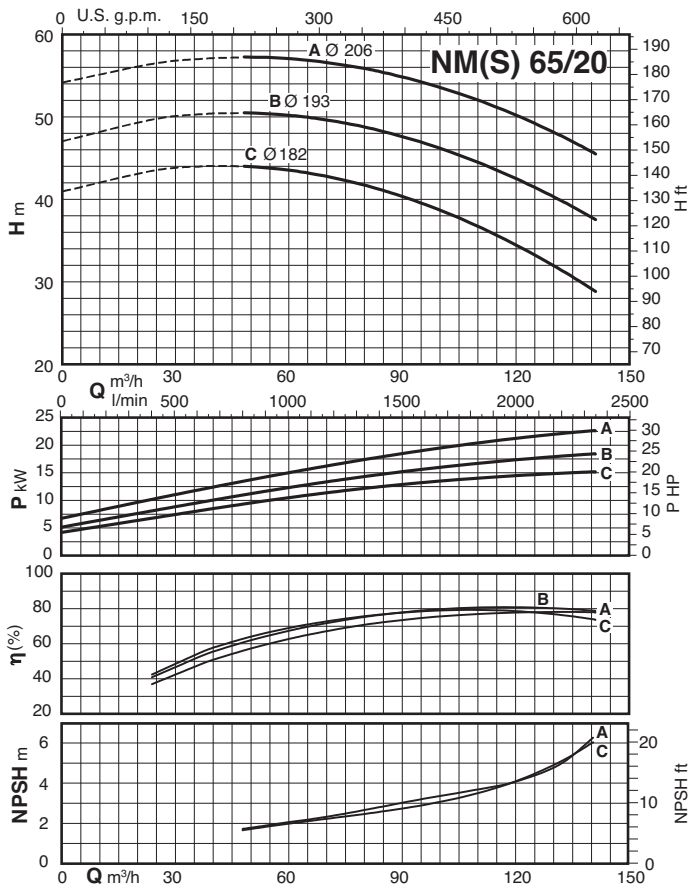

# NM, NMS

## Characteristic curves n ≈ 2900 rpm

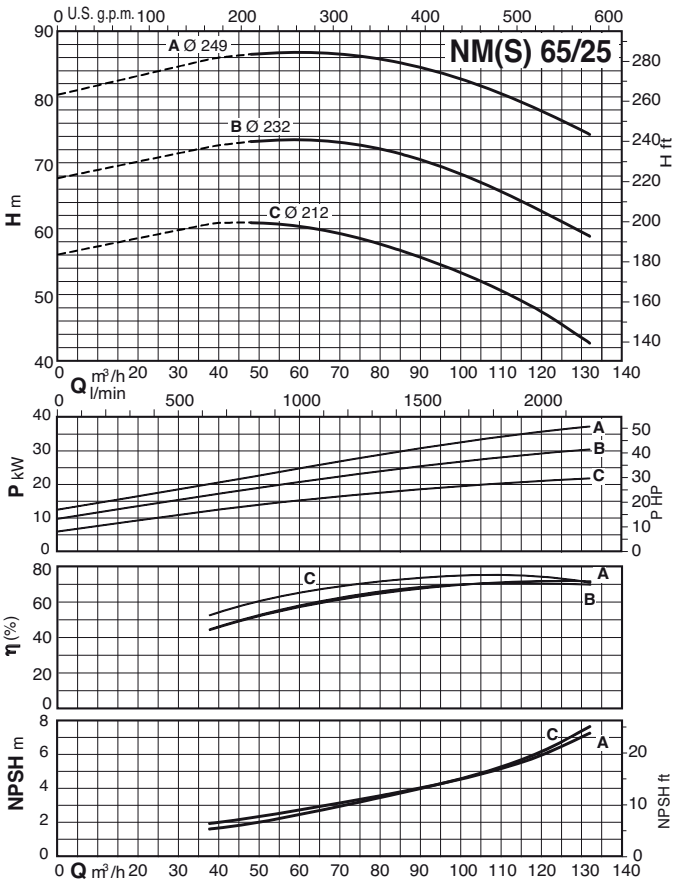


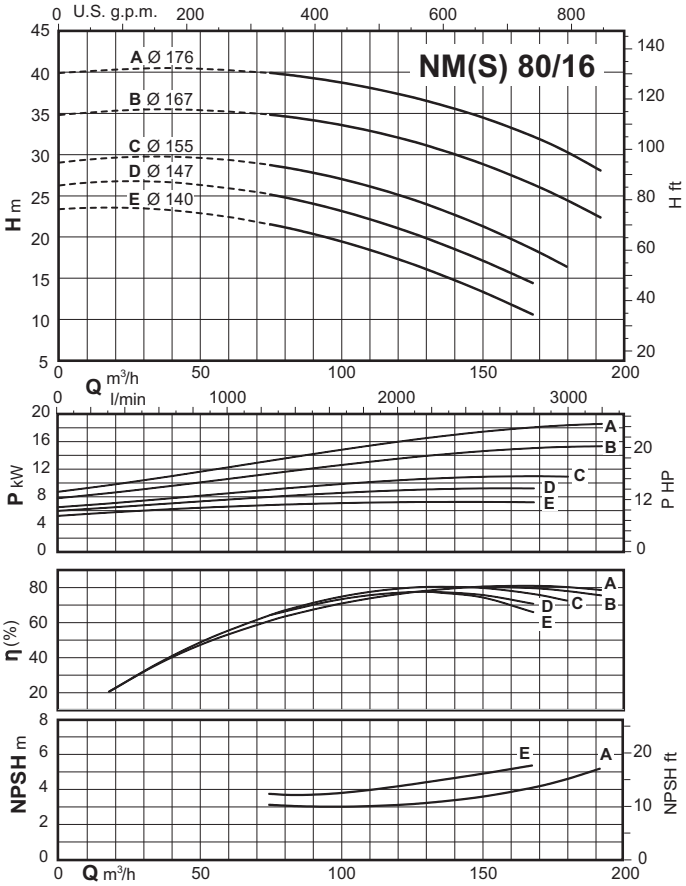


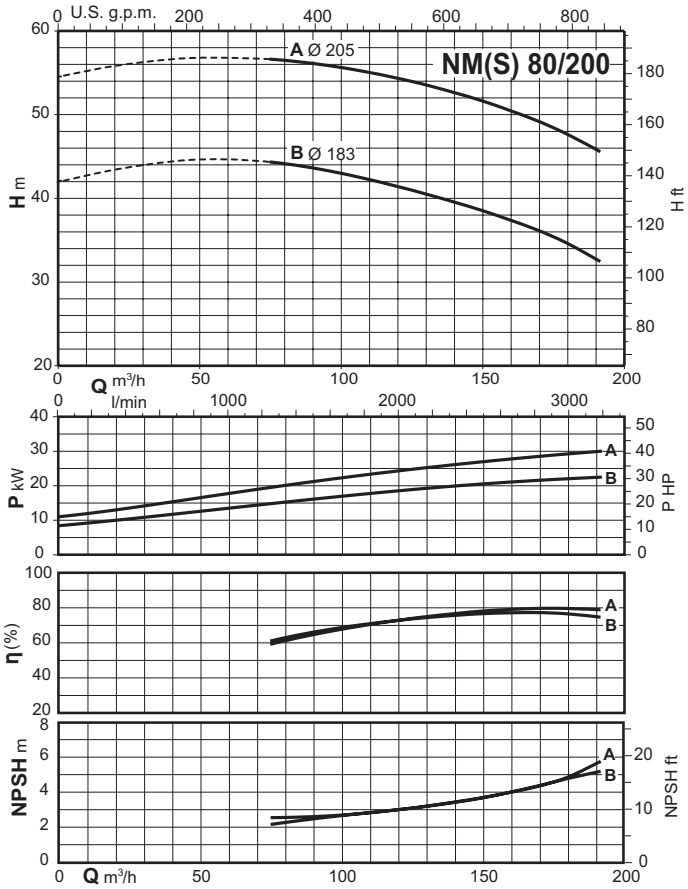


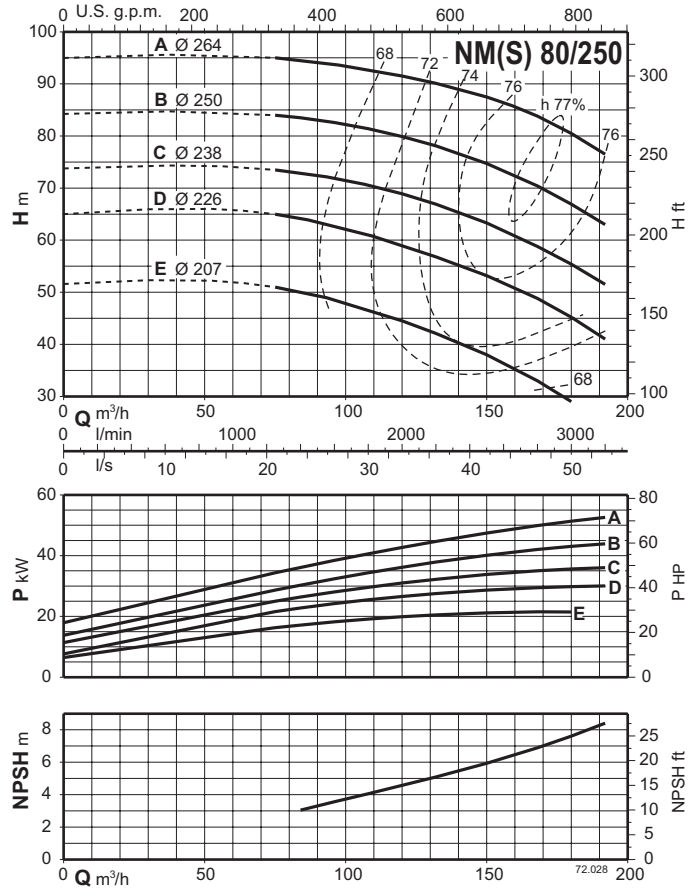

# NM, NMS

## Characteristic curves n ≈ 2900 rpm

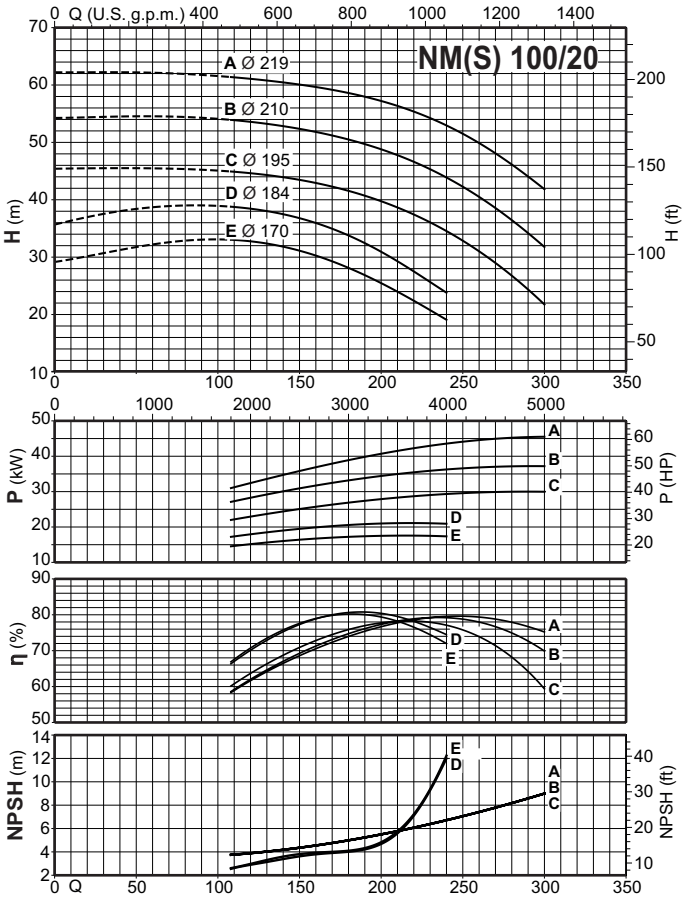


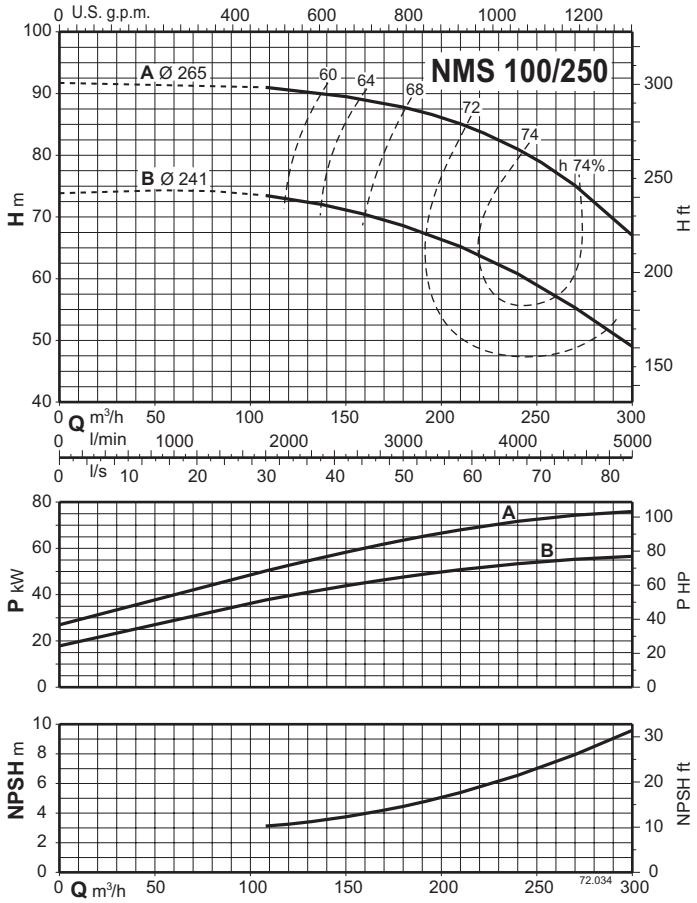

# NM4, NMS4

calpeda

## Characteristic curves n ≈ 1450 rpm

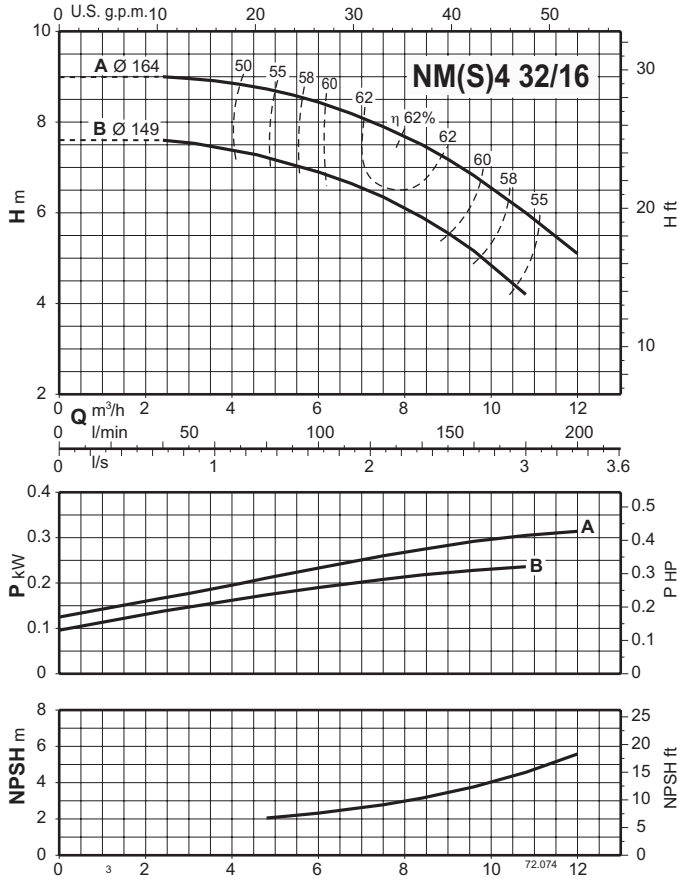


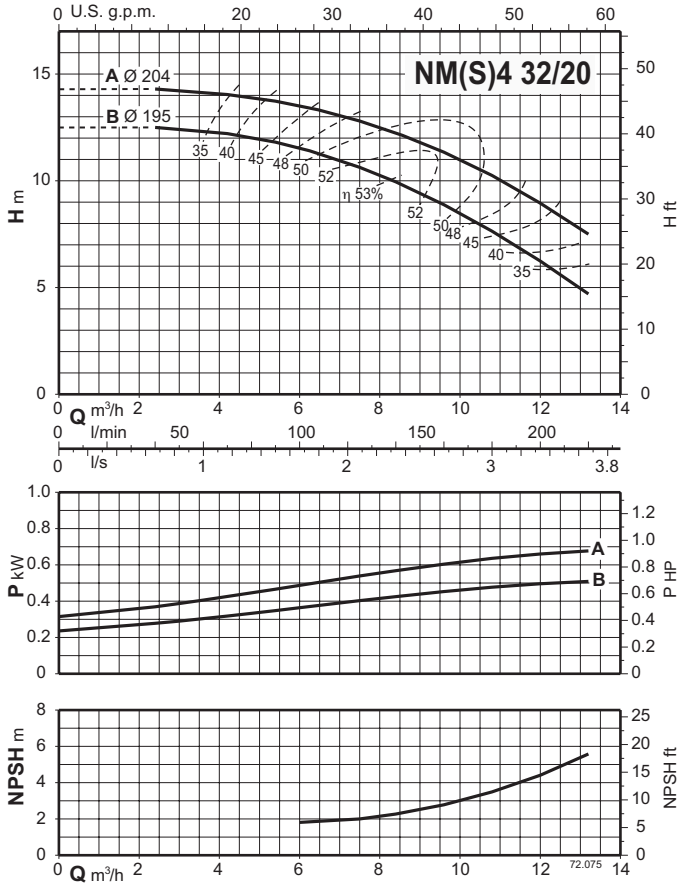


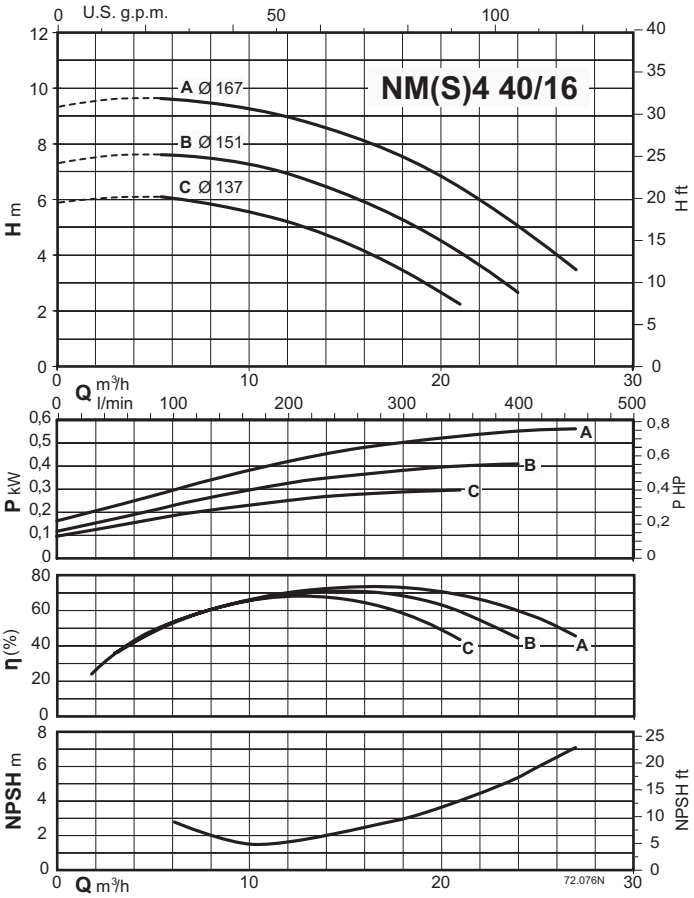


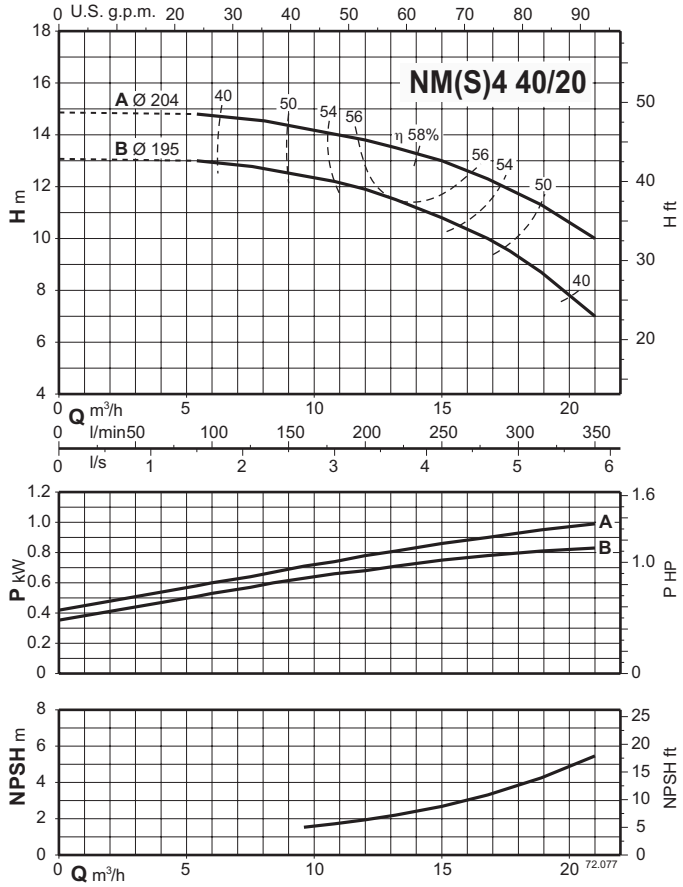

# NM4, NMS4

## Characteristic curves n ≈ 1450 rpm

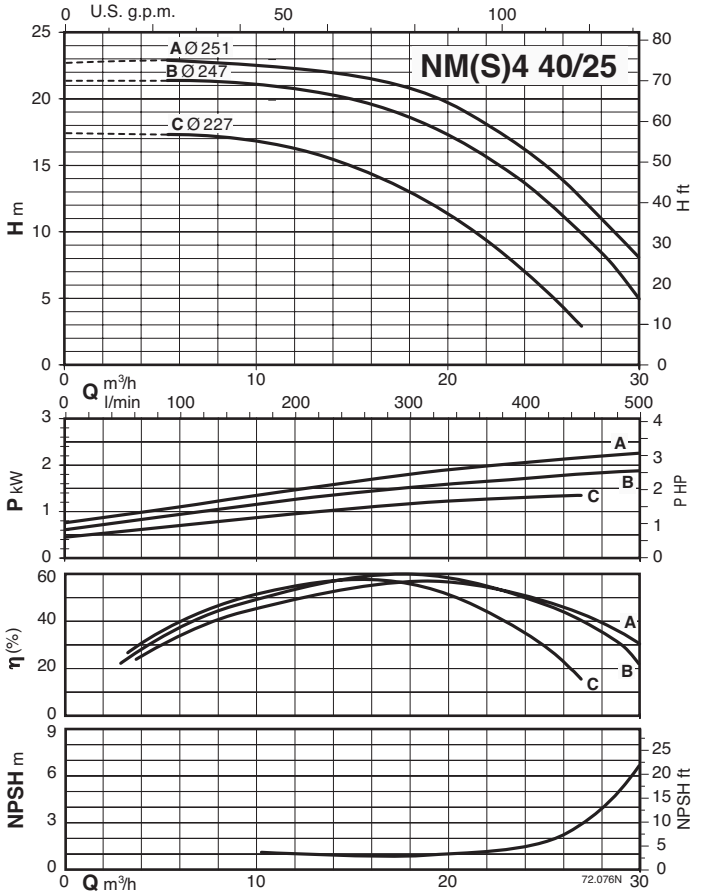


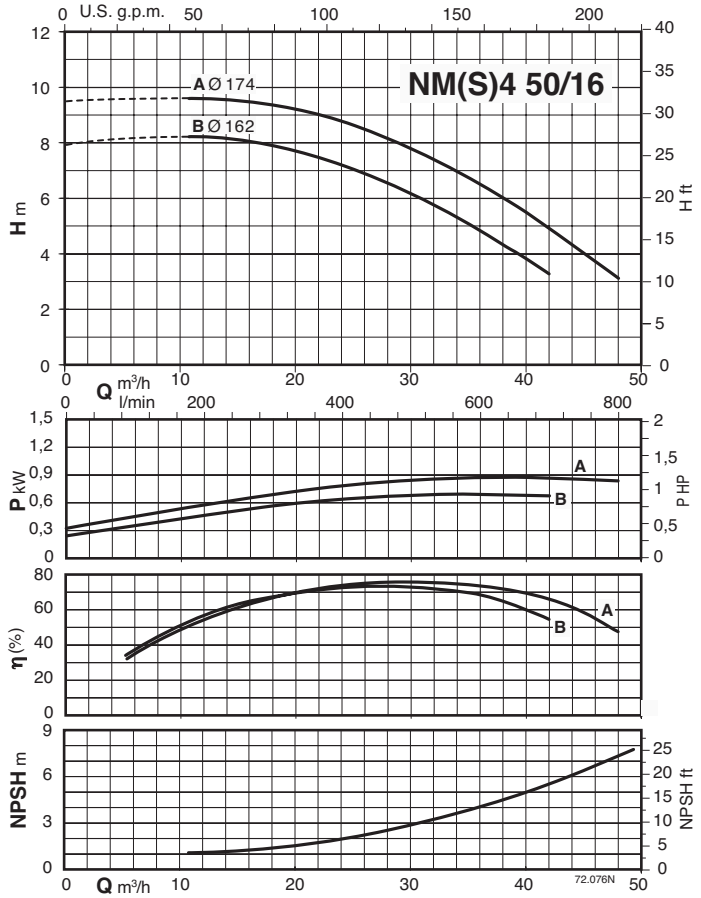


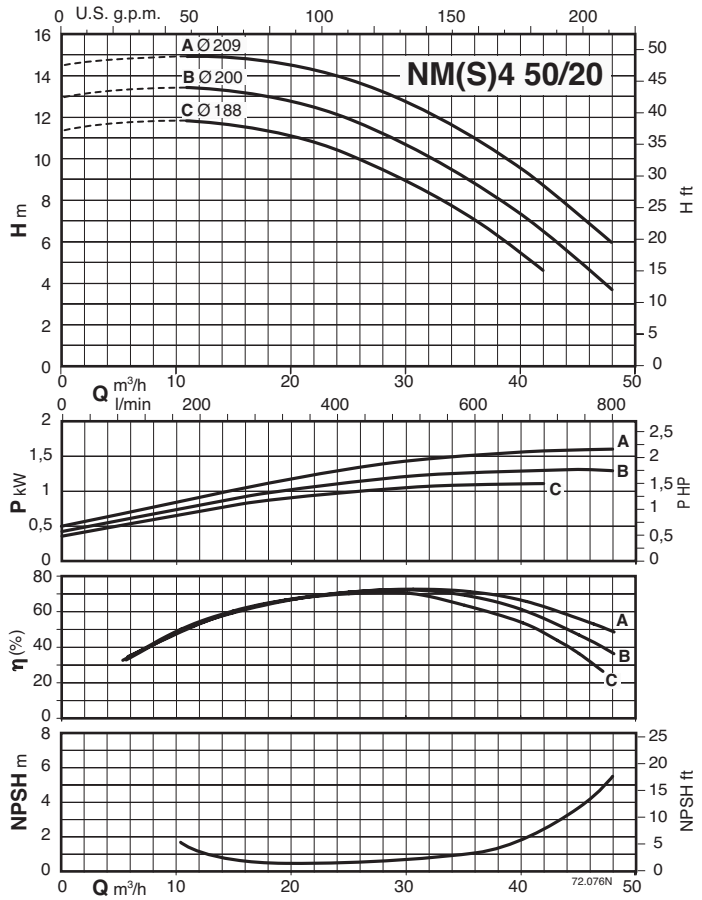


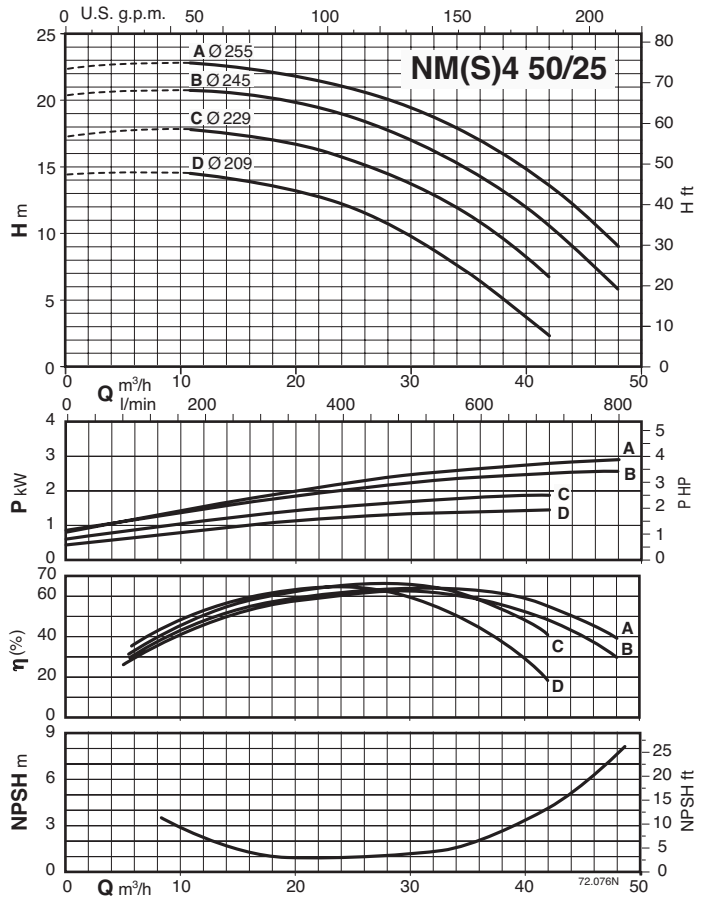

# NM4, NMS4

## Characteristic curves n ≈ 1450 rpm

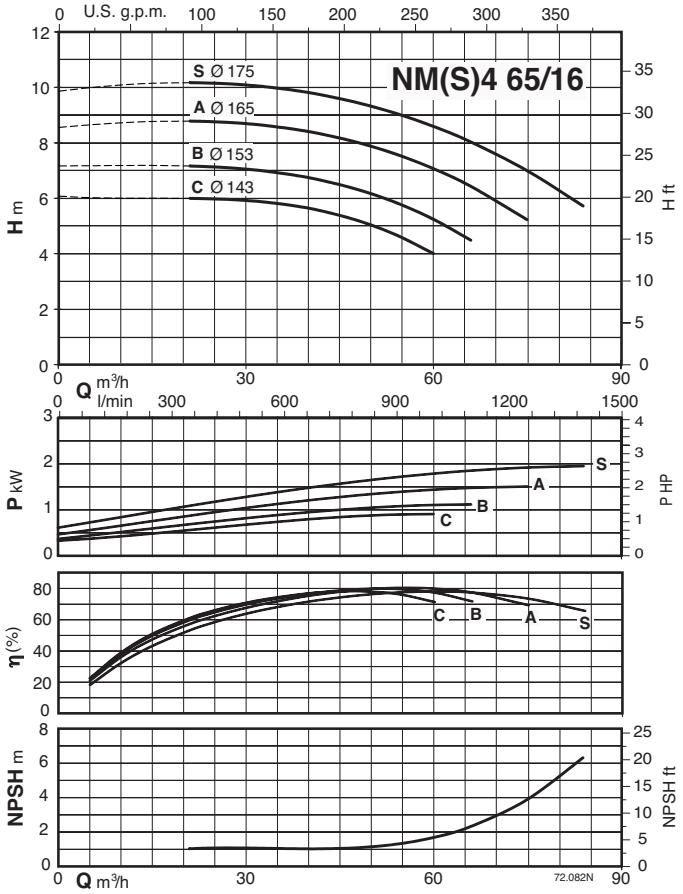


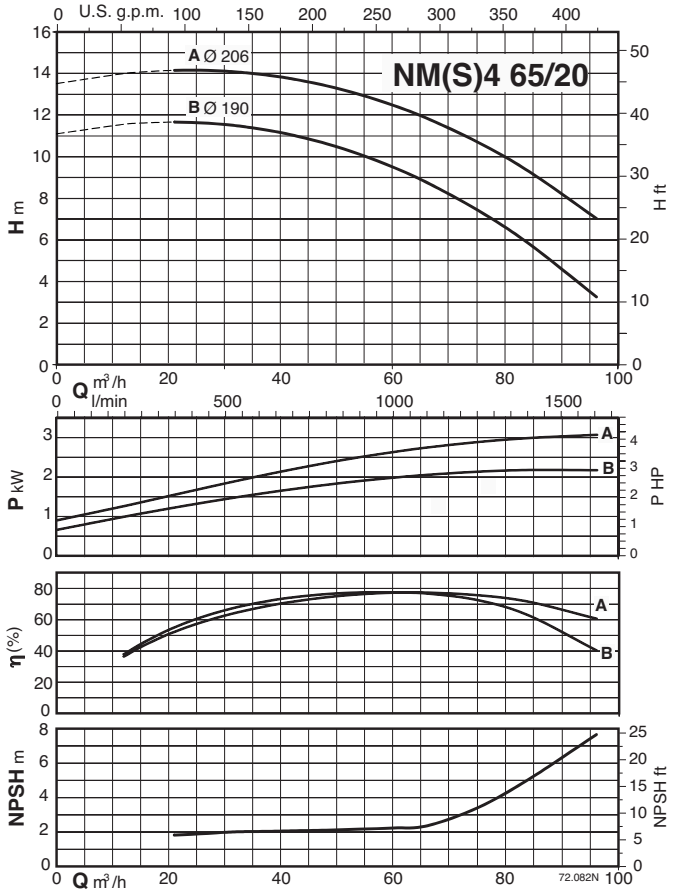


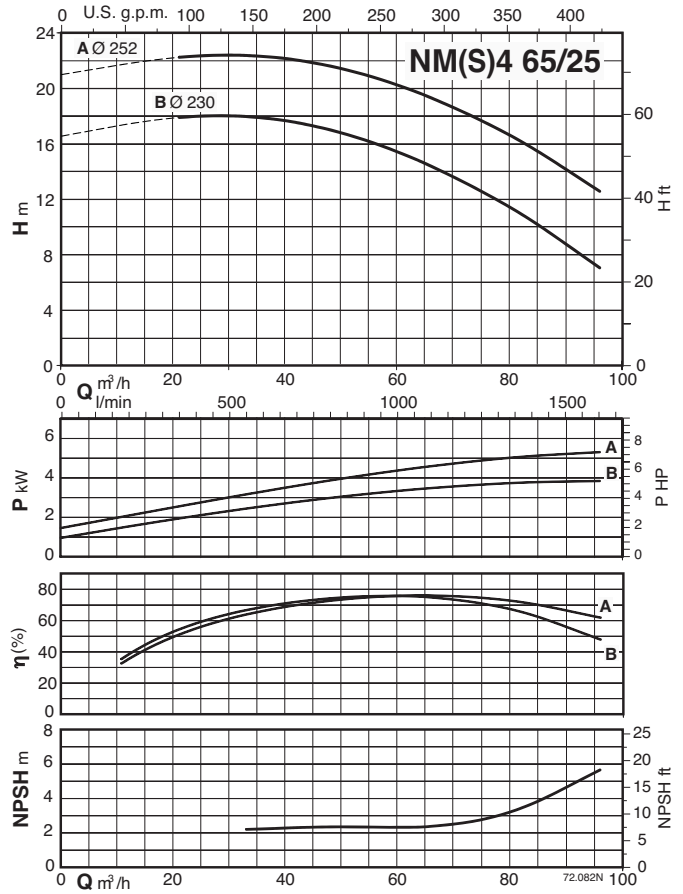


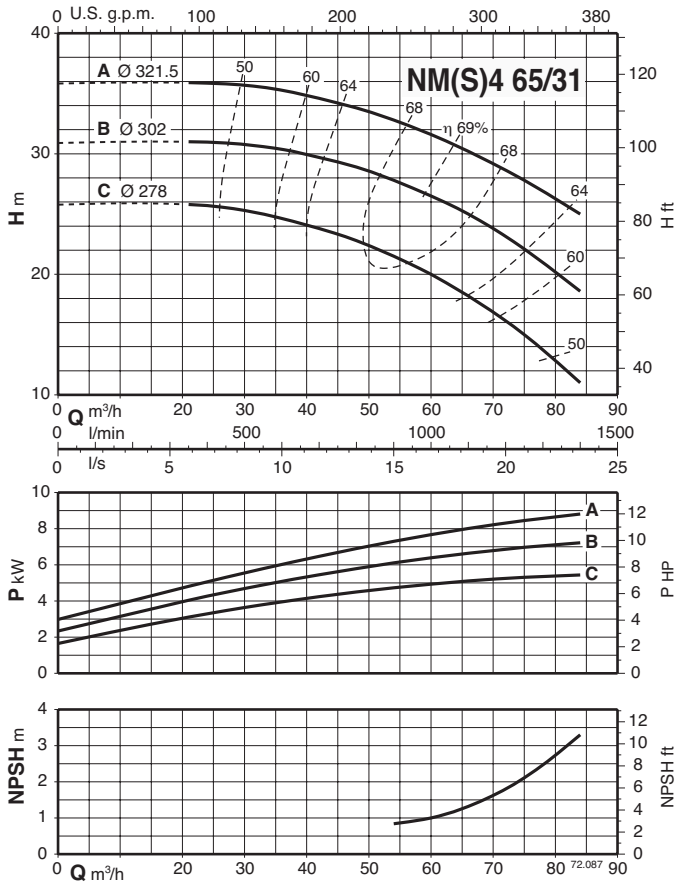

# NM4, NMS4

## Characteristic curves n ≈ 1450 rpm

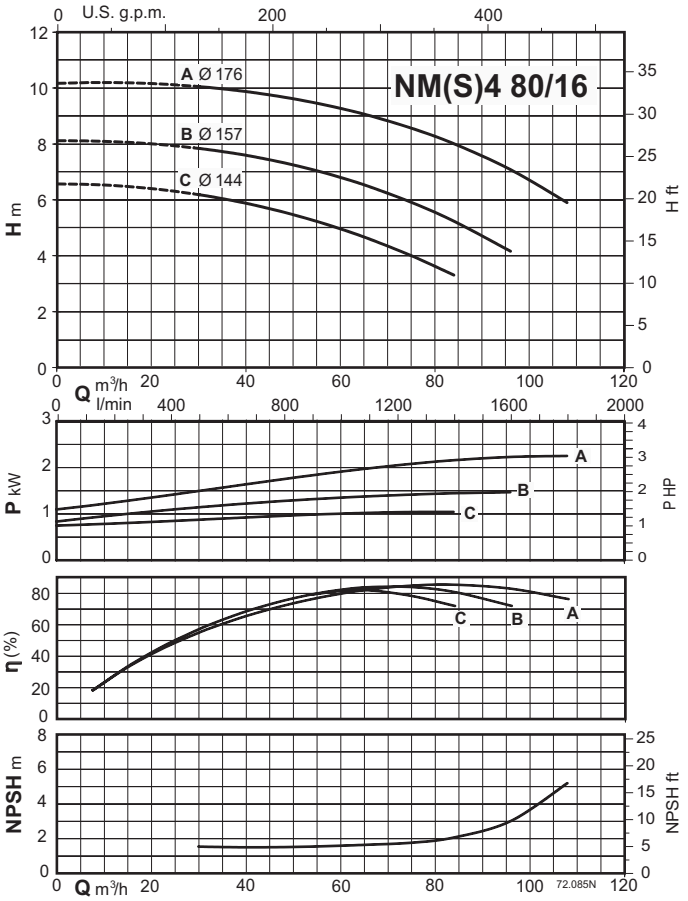


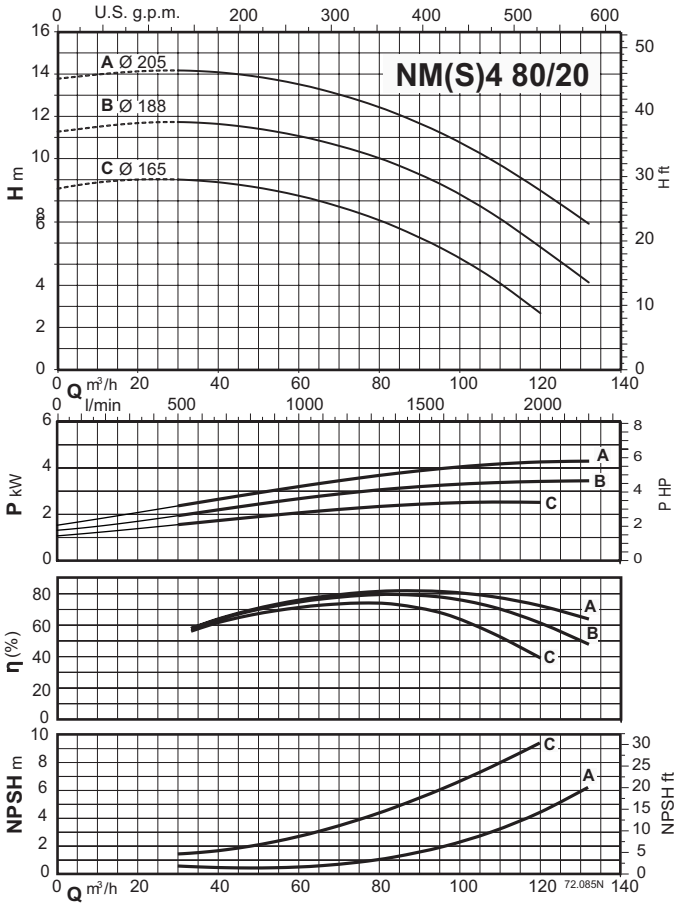


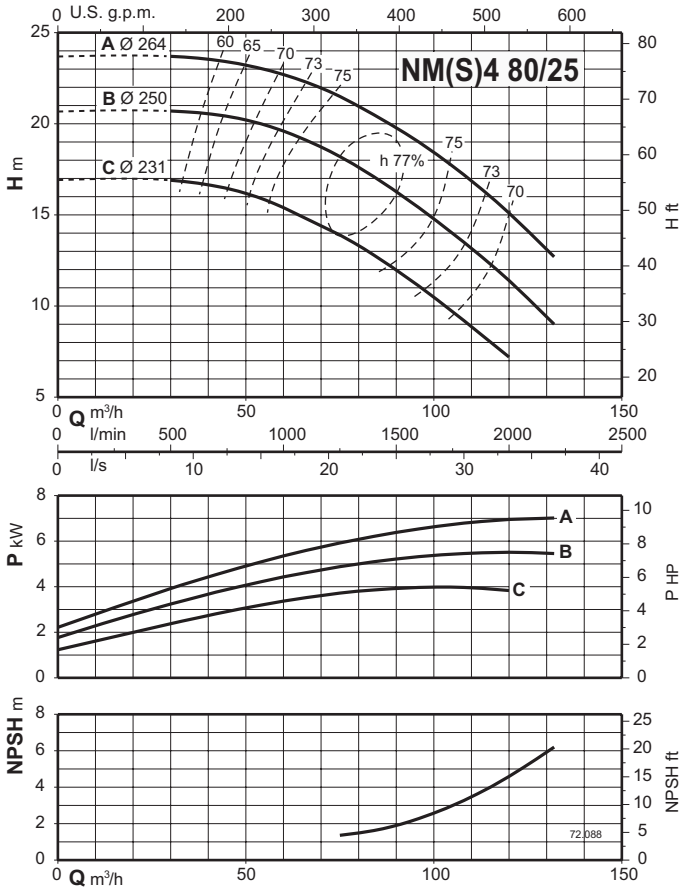

# NM4, NMS4

## Characteristic curves n ≈ 1450 rpm

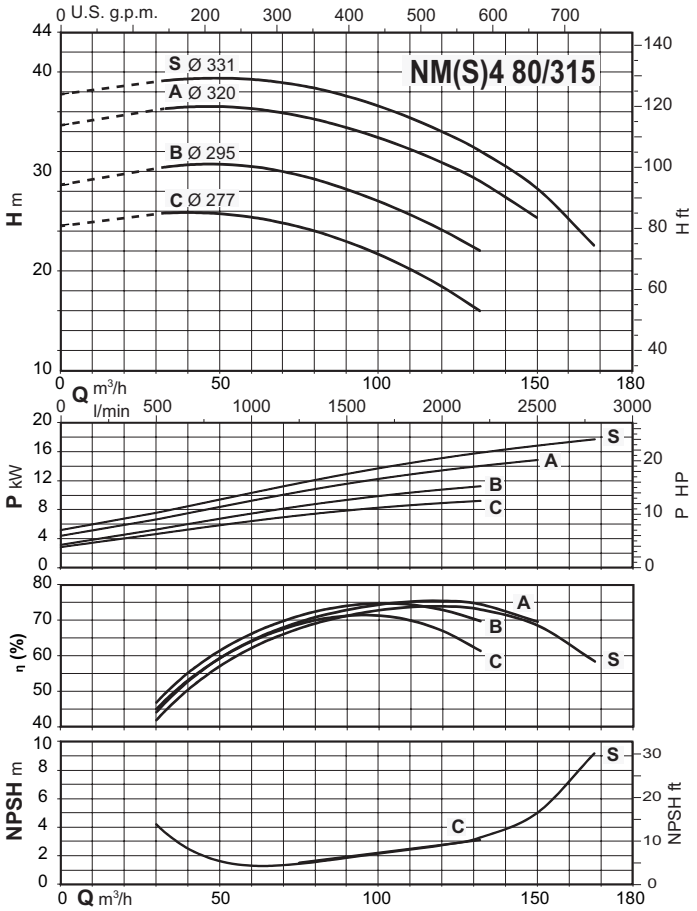


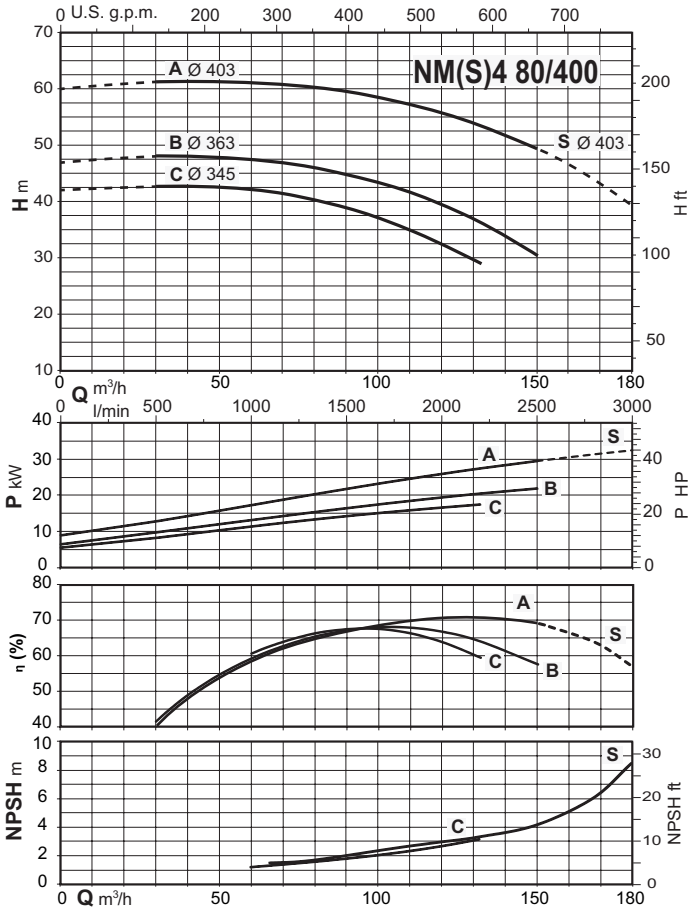

# NM4, NMS4

## Characteristic curves n ≈ 1450 rpm

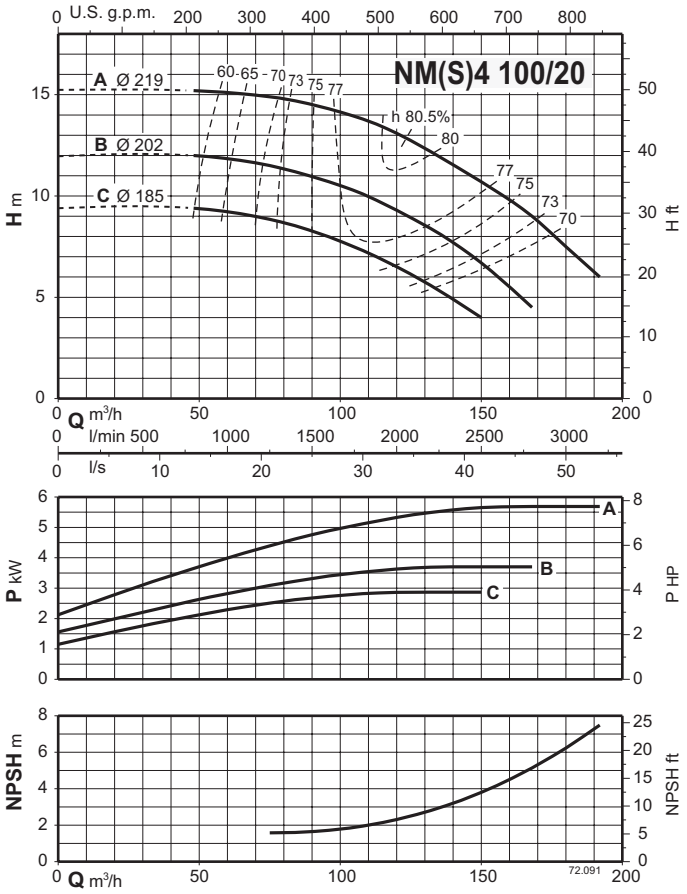


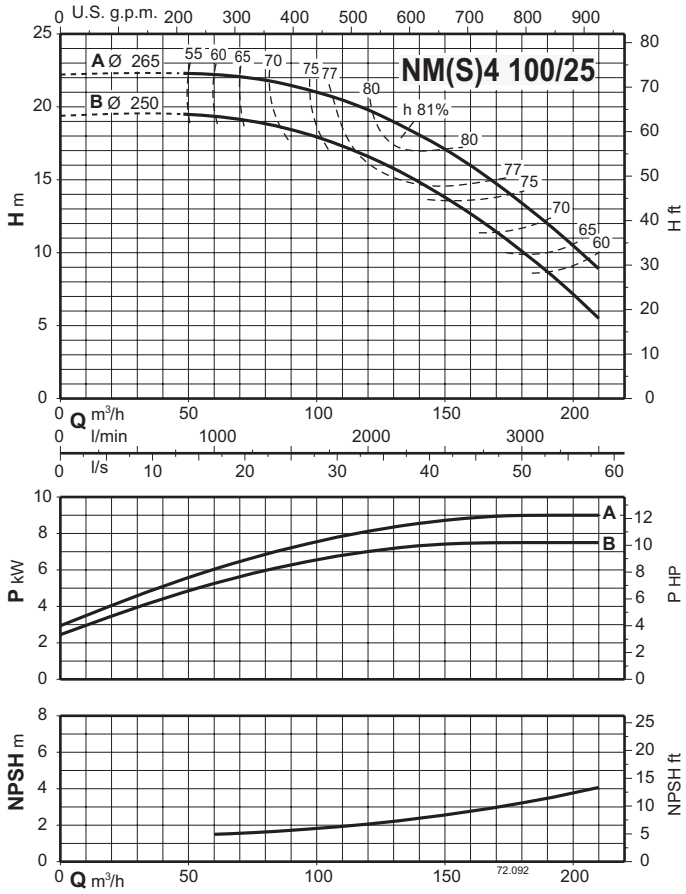


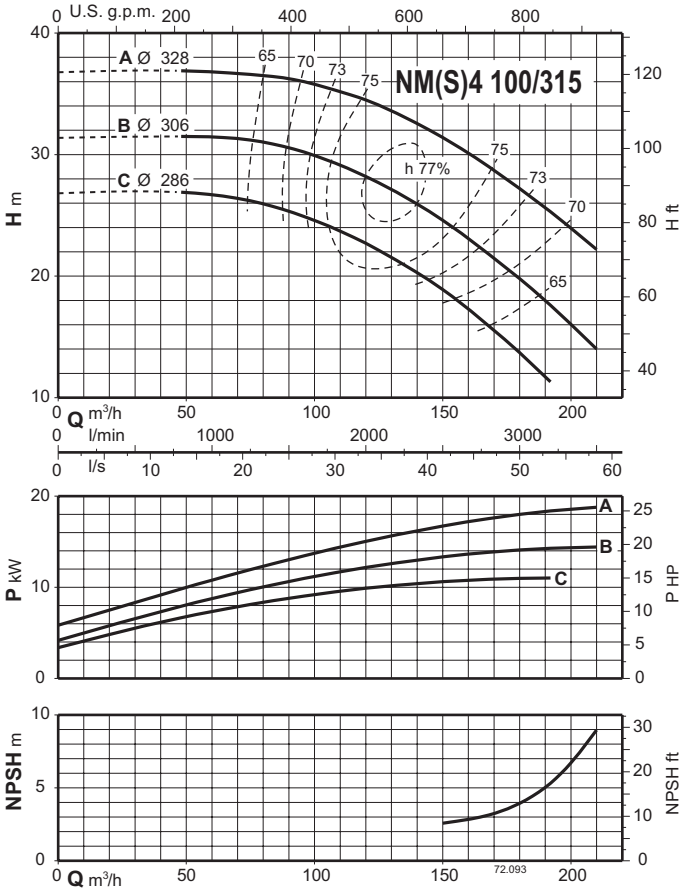


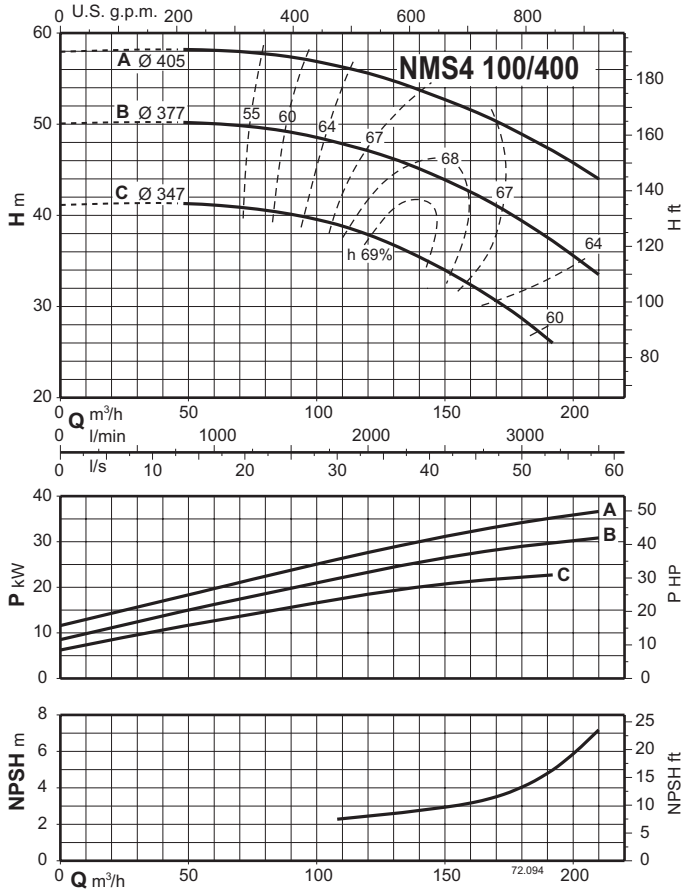

# NM4, NMS4

## Characteristic curves n ≈ 1450 rpm

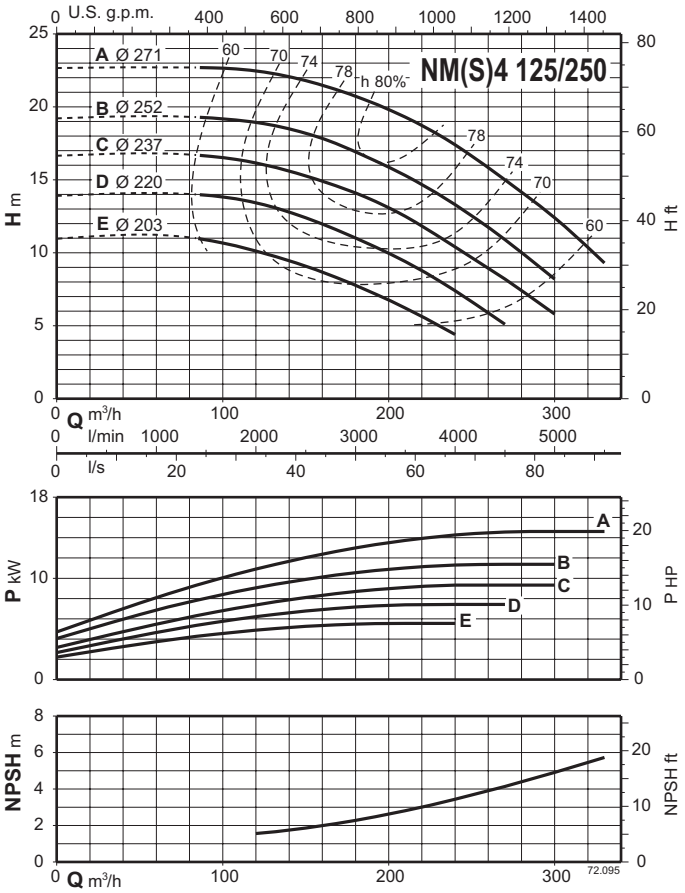


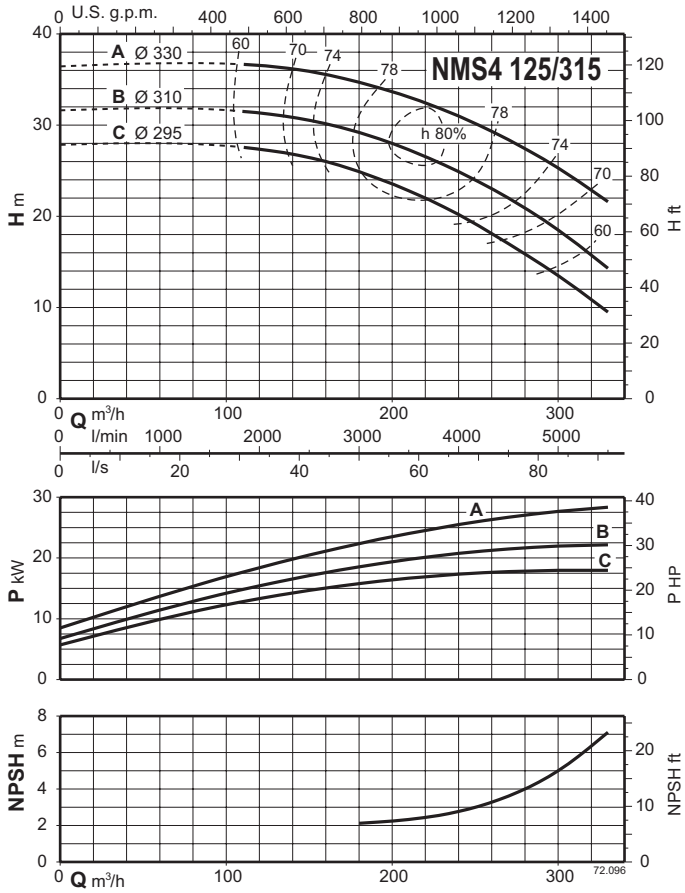


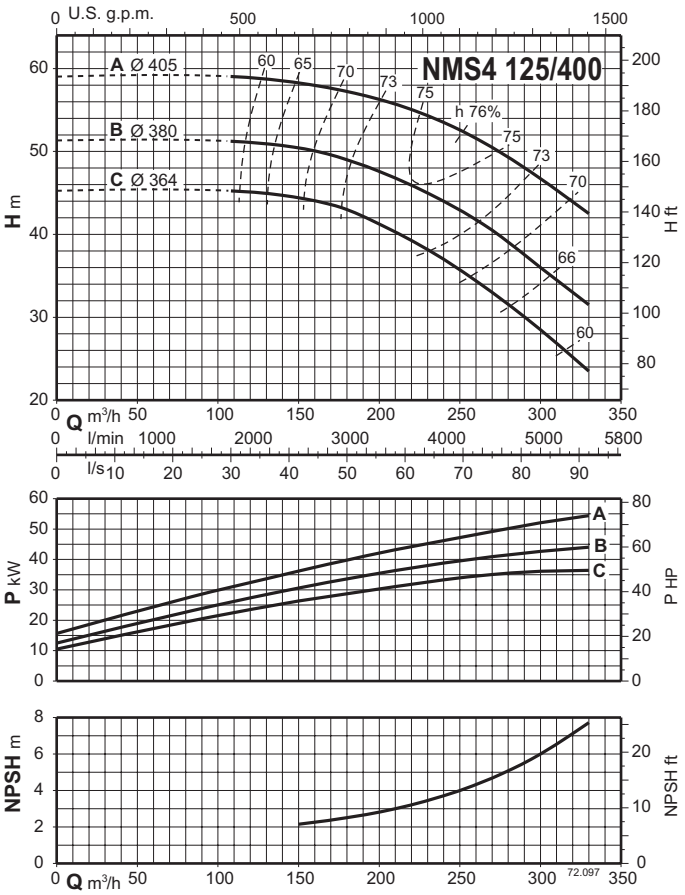

# NM4, NMS4

## Characteristic curves n ≈ 1450 rpm

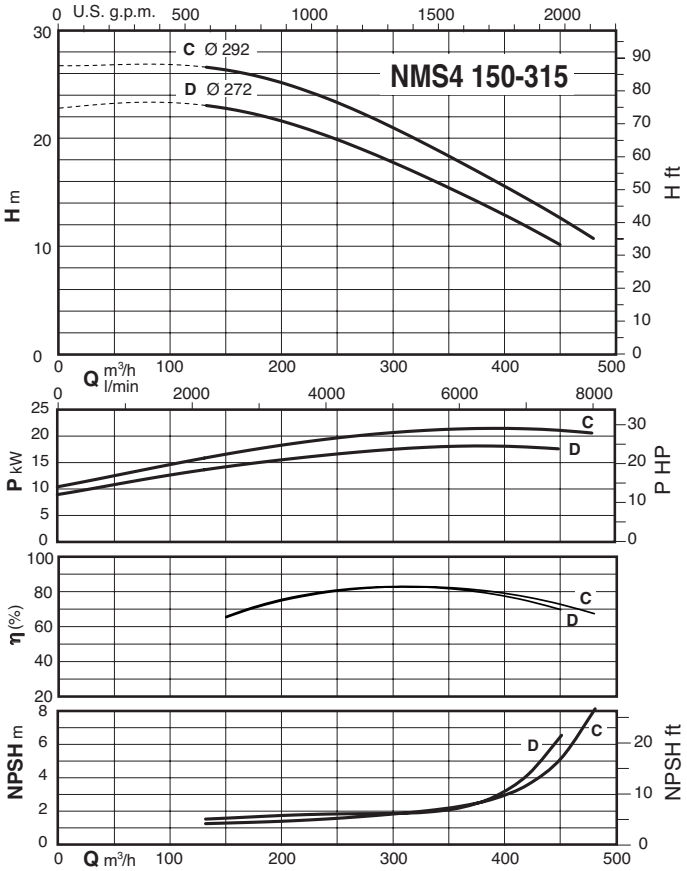


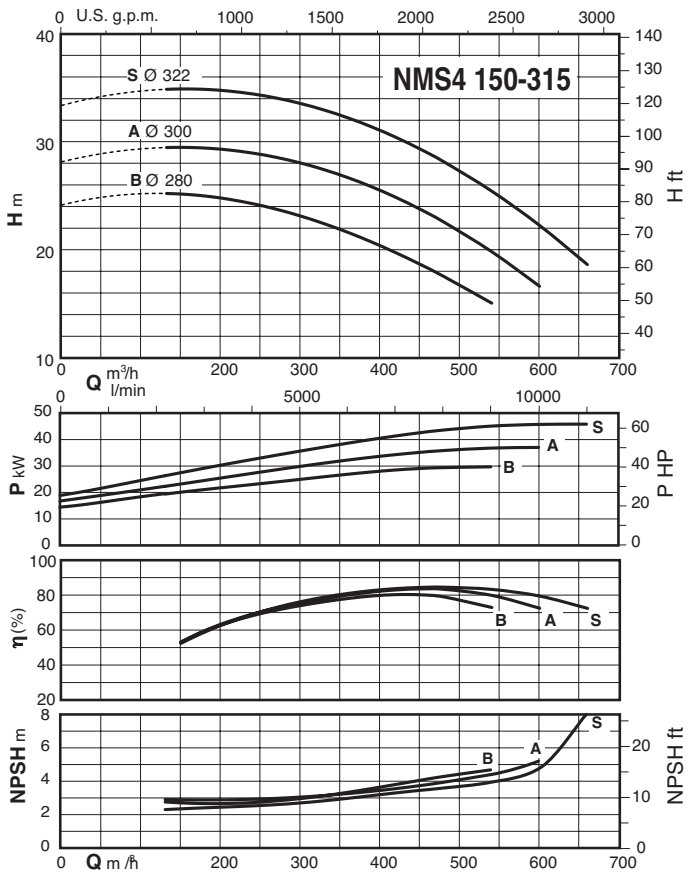


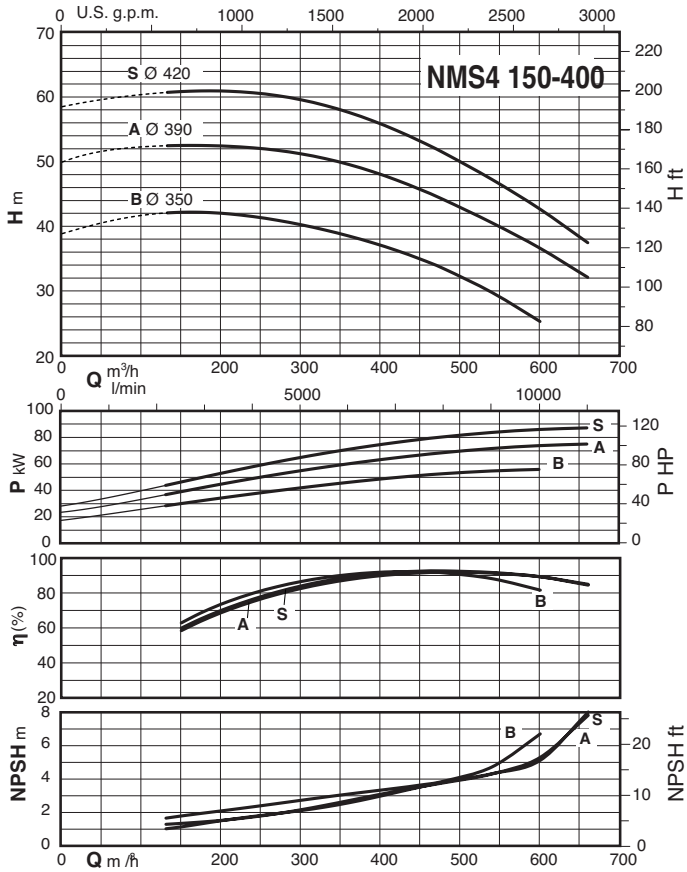

# NM, NMS

## Dimensions and weights

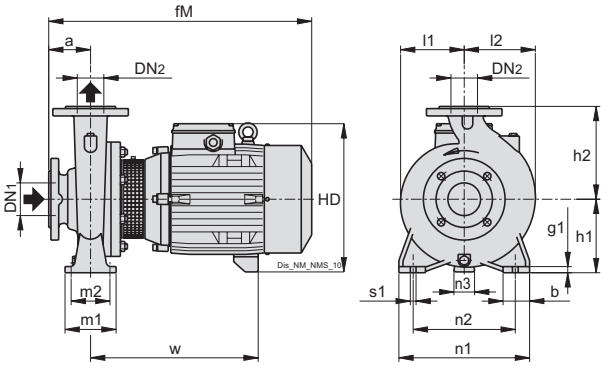


**Flanges EN 1092-2** PN 10-16

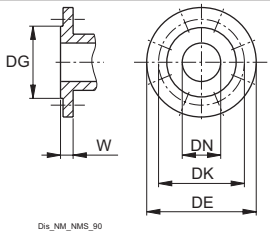


| mm | | | | | | |
|---|---|---|---|---|---|---|
| DN | DG | DK | DE | Holes N° | Holes ø | W |
| 32 | 76 | 100 | 140 | 4 | 19 | 18 |
| 40 | 84 | 110 | 150 | 4 | 19 | 18 |
| 50 | 99 | 125 | 165 | 4 | 19 | 20 |
| 65 | 118 | 145 | 185 | 4 | 19 | 20 |
| 80 | 132 | 160 | 200 | 8 | 19 | 22 |
| 100 | 156 | 180 | 220 | 8 | 19 | 24 |
| 125 | 184 | 210 | 250 | 8 | 19 | 24 |

## Three-phase

| TYPE | | | mm | | | | | | | | | | | | | | | | kg |
|---|---|---|---|---|---|---|---|---|---|---|---|---|---|---|---|---|---|---|---|
| | DN1 | DN2 | a | b | fM | g1 | h1 | h2 | HD | l1 | l2 | m1 | m2 | n1 | n2 | n3 | s1 | w | Weight |
| NM 32/12F | 50 | 32 | 80 | 50 | 408 | 12 | 112 | 140 | 242 | 93 | 98 | 100 | 70 | 190 | 140 | 31 | 14 | 248 | 23.5 |
| NM 32/12D | 50 | 32 | 80 | 50 | 408 | 12 | 112 | 140 | 242 | 93 | 98 | 100 | 70 | 190 | 140 | 31 | 14 | 248 | 23.5 |
| NM 32/12A/A | 50 | 32 | 80 | 50 | 408 | 12 | 112 | 140 | 242 | 93 | 98 | 100 | 70 | 190 | 140 | 31 | 14 | 248 | 26.2 |
| NM 32/12S/A | 50 | 32 | 80 | 50 | 408 | 12 | 112 | 140 | 242 | 93 | 98 | 100 | 70 | 190 | 140 | 31 | 14 | 248 | 27.2 |
| NM 32/16B/A | 50 | 32 | 80 | 50 | 413 | 12 | 132 | 160 | 262 | 119 | 119 | 100 | 70 | 240 | 190 | 35 | 14 | 255 | 33.2 |
| NM 32/16A/B | 50 | 32 | 80 | 50 | 453 | 12 | 132 | 160 | 262 | 119 | 119 | 100 | 70 | 240 | 190 | 35 | 14 | 295 | 36.7 |
| NM 32/20D/B | 50 | 32 | 80 | 50 | 453 | 12 | 160 | 180 | 290 | 140 | 140 | 100 | 70 | 240 | 190 | 40 | 14 | 297 | 41 |
| NM 32/20C/A | 50 | 32 | 80 | 50 | 479 | 12 | 160 | 180 | 300 | 140 | 140 | 100 | 70 | 240 | 190 | 37 | 14 | 297 | 48.8 |
| NM 32/20A/B | 50 | 32 | 80 | 50 | 479 | 12 | 160 | 180 | 300 | 140 | 140 | 100 | 70 | 240 | 190 | 37 | 14 | 297 | 51.2 |
| NM 32L/20C | 50 | 32 | 80 | 50 | 479 | 12 | 160 | 180 | 300 | 142 | 142 | 100 | 70 | 240 | 190 | 37 | 14 | 297 | 50.6 |
| NM 32L/20B | 50 | 32 | 80 | 50 | 539 | 12 | 160 | 180 | 327 | 142 | 142 | 100 | 70 | 240 | 190 | 34 | 14 | 335 | 63.6 |
| NM 32L/20A | 50 | 32 | 80 | 50 | 539 | 12 | 160 | 180 | 327 | 142 | 142 | 100 | 70 | 240 | 190 | 34 | 14 | 335 | 68.3 |
| NM 32L/16C | 50 | 32 | 80 | 50 | 453 | 10 | 132 | 160 | 262 | 121 | 121 | 100 | 70 | 240 | 190 | 35 | 14 | 295 | 35.2 |
| NM 32L/16B | 50 | 32 | 80 | 50 | 479 | 10 | 132 | 160 | 272 | 121 | 121 | 100 | 70 | 240 | 190 | 32 | 14 | 294 | 41.9 |
| NM 32L/16A | 50 | 32 | 80 | 50 | 479 | 10 | 132 | 160 | 272 | 121 | 121 | 100 | 70 | 240 | 190 | 32 | 14 | 294 | 45.4 |
| NM 40/12F/B | 65 | 40 | 80 | 50 | 413 | 12 | 112 | 140 | 242 | 100 | 112 | 100 | 70 | 210 | 160 | 31 | 14 | 253 | 27.6 |
| NM 40/12C/B | 65 | 40 | 80 | 50 | 413 | 12 | 112 | 140 | 242 | 100 | 112 | 100 | 70 | 210 | 160 | 31 | 14 | 253 | 29.4 |
| NM 40/12A/C | 65 | 40 | 80 | 50 | 453 | 12 | 112 | 140 | 242 | 100 | 112 | 100 | 70 | 210 | 160 | 31 | 14 | 293 | 32.2 |
| NM 40/16C/C | 65 | 40 | 80 | 50 | 453 | 10 | 132 | 160 | 262 | 120 | 122 | 100 | 70 | 240 | 190 | 35 | 14 | 295 | 36.5 |
| NM 40/16B/B | 65 | 40 | 80 | 50 | 479 | 10 | 132 | 160 | 272 | 120 | 122 | 100 | 70 | 240 | 190 | 32 | 14 | 294 | 43.3 |
| NM 40/16A/C | 65 | 40 | 80 | 50 | 479 | 10 | 132 | 160 | 272 | 120 | 122 | 100 | 70 | 240 | 190 | 32 | 14 | 294 | 46.7 |
| NM 40/20D/B | 65 | 40 | 100 | 50 | 499 | 12 | 160 | 180 | 300 | 141 | 141 | 100 | 70 | 265 | 212 | 37 | 14 | 297 | 53 |
| NM 40/20C/B | 65 | 40 | 100 | 50 | 499 | 12 | 160 | 180 | 300 | 141 | 141 | 100 | 70 | 265 | 212 | 37 | 14 | 297 | 53.4 |
| NM 40/20B/A | 65 | 40 | 100 | 50 | 559 | 12 | 160 | 180 | 327 | 141 | 141 | 100 | 70 | 265 | 212 | 34 | 14 | 335 | 66 |
| NM 40/20AR/A | 65 | 40 | 100 | 50 | 559 | 12 | 160 | 180 | 327 | 141 | 141 | 100 | 70 | 265 | 212 | 34 | 14 | 335 | 65.7 |
| NM 40/20A/A | 65 | 40 | 100 | 50 | 559 | 12 | 160 | 180 | 327 | 141 | 141 | 100 | 70 | 265 | 212 | 34 | 14 | 335 | 70.6 |
| NM 40/25C/C | 65 | 40 | 100 | 65 | 639 | 15 | 180 | 225 | 370 | 177 | 177 | 125 | 95 | 320 | 250 | 35 | 14 | 397 | 107.8 |
| NM 40/25B/C | 65 | 40 | 100 | 65 | 639 | 15 | 180 | 225 | 370 | 177 | 177 | 125 | 95 | 320 | 250 | 35 | 14 | 397 | 115.3 |
| NM 40/25A/C | 65 | 40 | 100 | 65 | 714 | 15 | 180 | 225 | 370 | 177 | 177 | 125 | 95 | 320 | 250 | 35 | 14 | 472 | 135 |
| NM 50/12F/C | 65 | 50 | 100 | 50 | 473 | 10 | 132 | 160 | 262 | 122 | 137 | 100 | 70 | 240 | 190 | 35 | 14 | 295 | 37.2 |
| NM 50/12D/B | 65 | 50 | 100 | 50 | 499 | 10 | 132 | 160 | 272 | 122 | 137 | 100 | 70 | 240 | 190 | 32 | 14 | 294 | 44.8 |
| NM 50/12A/C | 65 | 50 | 100 | 50 | 499 | 10 | 132 | 160 | 272 | 122 | 137 | 100 | 70 | 240 | 190 | 32 | 14 | 294 | 48.2 |
| NM 50/12S/C | 65 | 50 | 100 | 50 | 499 | 10 | 132 | 160 | 272 | 122 | 137 | 100 | 70 | 240 | 190 | 32 | 14 | 294 | 48.3 |
| NM 50/16B/B | 65 | 50 | 100 | 50 | 559 | 12 | 160 | 180 | 327 | 125 | 140 | 100 | 70 | 265 | 212 | 34 | 14 | 335 | 64.2 |
| NM 50/16A/B | 65 | 50 | 100 | 50 | 559 | 12 | 160 | 180 | 327 | 125 | 140 | 100 | 70 | 265 | 212 | 34 | 14 | 335 | 68.8 |
| NM 50/20B/C | 65 | 50 | 100 | 50 | 639 | 14 | 160 | 200 | 350 | 142 | 152 | 100 | 70 | 265 | 212 | 31 | 14 | 395 | 99.6 |
| NM 50/20A/C | 65 | 50 | 100 | 50 | 639 | 14 | 160 | 200 | 350 | 142 | 152 | 100 | 70 | 265 | 212 | 31 | 14 | 395 | 106.9 |
| NM 50/20S/C | 65 | 50 | 100 | 50 | 714 | 14 | 160 | 200 | 350 | 142 | 152 | 100 | 70 | 265 | 212 | 31 | 14 | 470 | 131 |
| NM 50/25C/C | 65 | 50 | 100 | 65 | 644 | 15 | 180 | 225 | 370 | 177 | 177 | 125 | 95 | 320 | 250 | 35 | 14 | 402 | 120 |
| NM 50/25B/C | 65 | 50 | 100 | 65 | 719 | 15 | 180 | 225 | 370 | 177 | 177 | 125 | 95 | 320 | 250 | 35 | 14 | 477 | 145.3 |
| NM 65/12E/C | 80 | 65 | 100 | 65 | 504 | 12 | 160 | 180 | 300 | 130 | 154 | 125 | 95 | 280 | 212 | 37 | 14 | 302 | 52 |
| NM 65/12C/B | 80 | 65 | 100 | 65 | 564 | 12 | 160 | 180 | 327 | 130 | 154 | 125 | 95 | 280 | 212 | 34 | 14 | 340 | 65.5 |
| NM 65/12A/B | 80 | 65 | 100 | 65 | 564 | 12 | 160 | 180 | 327 | 130 | 154 | 125 | 95 | 280 | 212 | 34 | 14 | 340 | 71.1 |
| NM 65/16D/B | 80 | 65 | 100 | 65 | 559 | 12 | 160 | 200 | 327 | 140 | 161 | 125 | 95 | 280 | 212 | 34 | 14 | 335 | 70.5 |
| NM 65/16C/C | 80 | 65 | 100 | 65 | 639 | 12 | 160 | 200 | 350 | 140 | 161 | 125 | 95 | 280 | 212 | 31 | 14 | 395 | 93 |
| NM 65/16B/C | 80 | 65 | 100 | 65 | 639 | 12 | 160 | 200 | 350 | 140 | 161 | 125 | 95 | 280 | 212 | 31 | 14 | 395 | 101.5 |
| NM 65/16AR | 80 | 65 | 100 | 65 | 714 | 12 | 160 | 200 | 350 | 140 | 161 | 125 | 95 | 280 | 212 | 31 | 14 | 470 | 120.2 |
| NM 65/16A/C | 80 | 65 | 100 | 65 | 714 | 12 | 160 | 200 | 350 | 140 | 161 | 125 | 95 | 280 | 212 | 31 | 14 | 470 | 124.5 |
| NM 65/20C/C | 80 | 65 | 100 | 65 | 714 | 12 | 180 | 225 | 370 | 159 | 179 | 125 | 95 | 320 | 250 | 35 | 14 | 472 | 130.9 |
| NM 80/16E/B | 100 | 80 | 125 | 65 | 584 | 12 | 180 | 225 | 347 | 152 | 181 | 125 | 95 | 320 | 250 | 37 | 14 | 337 | 78.5 |
| NM 80/16D/C | 100 | 80 | 125 | 65 | 669 | 12 | 180 | 225 | 370 | 152 | 181 | 125 | 95 | 320 | 250 | 35 | 14 | 402 | 101 |
| NM 80/16C/C | 100 | 80 | 125 | 65 | 669 | 12 | 180 | 225 | 370 | 152 | 181 | 125 | 95 | 320 | 250 | 35 | 14 | 402 | 109.8 |
| NM 80/16B/C | 100 | 80 | 125 | 65 | 744 | 12 | 180 | 225 | 370 | 152 | 181 | 125 | 95 | 320 | 250 | 35 | 14 | 477 | 132.5 |

# NM, NMS

## Dimensions and weights

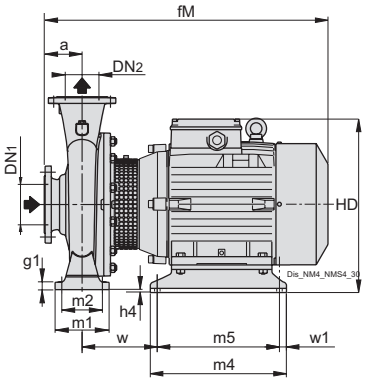


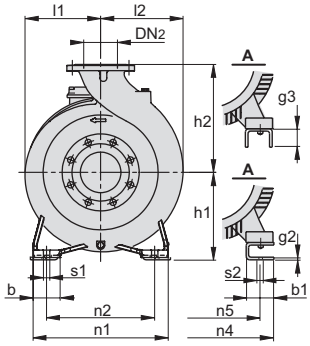


**Flanges EN 1092-2** PN 10-16

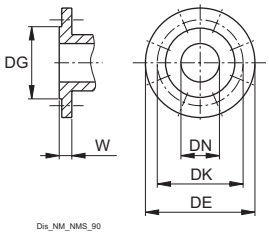


| mm | | | | | | |
|---|---|---|---|---|---|---|
| DN | DG | DK | DE | Holes | | W |
| | | | | N° | ø | |
| 32 | 76 | 100 | 140 | 4 | 19 | 18 |
| 40 | 84 | 110 | 150 | 4 | 19 | 18 |
| 50 | 99 | 125 | 165 | 4 | 19 | 20 |
| 65 | 118 | 145 | 185 | 4 | 19 | 20 |
| 80 | 132 | 160 | 200 | 8 | 19 | 22 |
| 100 | 156 | 180 | 220 | 8 | 19 | 24 |
| 125 | 184 | 210 | 250 | 8 | 19 | 24 |

## Three-phase

| TYPE | | | mm | | | | | | | | | | | | | | | | | | | | | | | | kg |
|---|---|---|---|---|---|---|---|---|---|---|---|---|---|---|---|---|---|---|---|---|---|---|---|---|---|---|---|
| | DN1 | DN2 | a | b | b1 | fM | g1 | g3 | h1 | h2 | h4 | HD | l1 | l2 | m1 | m2 | m4 | m5 | n1 | n2 | n4 | n5 | s1 | s2 | w | w1 | Weight |
| **NM 50/25A/D** | 65 | 50 | 100 | 65 | 80 | 765 | 15 | 20 | 180 | 225 | - | 388 | 177 | 177 | 125 | 95 | 394 | 354 | 320 | 250 | 334 | 254 | 14 | 15 | 185 | 20 | 168.2 |
| **NM 50/25S** | 65 | 50 | 100 | 65 | 80 | 765 | 15 | 20 | 180 | 225 | - | 388 | 177 | 177 | 125 | 95 | 394 | 354 | 320 | 250 | 334 | 254 | 14 | 15 | 185 | 20 | 175.7 |
| **NM 65/20B/D** | 80 | 65 | 100 | 65 | 80 | 765 | 12 | 20 | 180 | 225 | - | 388 | 159 | 179 | 125 | 95 | 394 | 354 | 320 | 250 | 334 | 254 | 14 | 15 | 185 | 20 | 163 |
| **NM 65/20A/A** | 80 | 65 | 100 | 65 | 80 | 765 | 12 | 20 | 180 | 225 | - | 388 | 159 | 179 | 125 | 95 | 394 | 354 | 320 | 250 | 334 | 254 | 14 | 15 | 185 | 20 | 168.9 |
| **NM 65/25C/A** | 80 | 65 | 100 | 80 | 90 | 765 | 15 | 42 | 200 | 250 | 2 | 408 | 178 | 195 | 160 | 120 | 400 | 360 | 360 | 280 | 344 | 254 | 18 | 14 | 182 | 20 | 187.4 |
| **NM 80/16A/D** | 100 | 80 | 125 | 65 | 80 | 790 | 12 | 20 | 180 | 225 | - | 388 | 152 | 181 | 125 | 95 | 394 | 354 | 320 | 250 | 334 | 254 | 14 | 15 | 185 | 20 | 157.9 |
| **NM 80/20B/A** | 100 | 80 | 125 | 65 | 90 | 790 | 15 | 42 | 180 | 250 | 22 | 388 | 170 | 194 | 125 | 95 | 400 | 360 | 345 | 280 | 344 | 254 | 14 | 14 | 182 | 20 | 178 |
| **NM 80/25E** | 100 | 80 | 125 | 80 | 90 | 790 | 20 | 42 | 200 | 280 | 2 | 408 | 191 | 211 | 160 | 120 | 400 | 360 | 400 | 315 | 344 | 254 | 18 | 14 | 182 | 20 | 190.2 |
| **NM 100/20E/A** | 125 | 100 | 125 | 80 | 60 | 790 | 15 | 40 | 200 | 280 | - | 408 | 179 | 211 | 160 | 120 | 394 | 354 | 360 | 280 | 314 | 254 | 18 | 15 | 185 | 20 | 174.8 |
| **NM 100/20D** | 125 | 100 | 125 | 80 | 60 | 790 | 15 | 40 | 200 | 280 | - | 408 | 179 | 211 | 160 | 120 | 394 | 354 | 360 | 280 | 314 | 254 | 18 | 15 | 185 | 20 | 182.6 |

# NM, NMS

## Dimensions and weights with IE3 motor

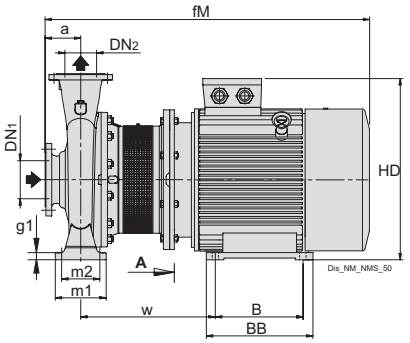


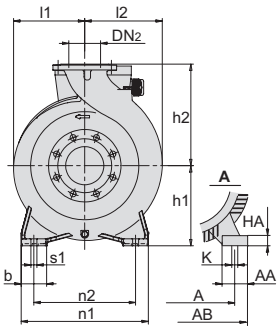


**Flanges EN 1092-2** PN 10-16

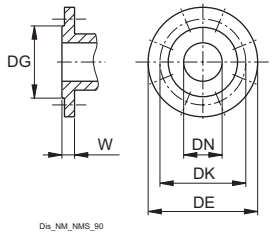


| mm | | | | | | |
|---|---|---|---|---|---|---|
| DN | DG | DK | DE | Holes N° | Holes ø | W |
| 32 | 76 | 100 | 140 | 4 | 19 | 18 |
| 40 | 84 | 110 | 150 | 4 | 19 | 18 |
| 50 | 99 | 125 | 165 | 4 | 19 | 20 |
| 65 | 118 | 145 | 185 | 4 | 19 | 20 |
| 80 | 132 | 160 | 200 | 8 | 19 | 22 |
| 100 | 156 | 180 | 220 | 8 | 19 | 24 |
| 125 | 184 | 210 | 250 | 8 | 19 | 24 |

| TYPE | | | mm | | | | | | | | | | | | | | | | | | | | | | kg |
|---|---|---|---|---|---|---|---|---|---|---|---|---|---|---|---|---|---|---|---|---|---|---|---|---|---|
| | DN1 | DN2 | a | A | AA | AB | b | B | BB | fM | g1 | h1 | h2 | HA | HD | K | l1 | l2 | m1 | m2 | n1 | n2 | s1 | w | Weight |
| **NMS 65/200A** | 80 | 65 | 100 | 279 | 70 | 350 | 65 | 241 | 312 | 955 | 12 | 180 | 225 | 22 | 450 | 15 | 159 | 179 | 125 | 95 | 320 | 250 | 14 | 394 | - |
| **NMS 65/250B/B** | 80 | 65 | 100 | 318 | 70 | 390 | 80 | 305 | 370 | 1006 | 15 | 200 | 250 | 25 | 500 | 19 | 178 | 195 | 160 | 120 | 360 | 280 | 18 | 406 | - |
| **NMS 65/250A/B** | 80 | 65 | 100 | 318 | 70 | 390 | 80 | 305 | 370 | 1006 | 15 | 200 | 250 | 25 | 500 | 19 | 178 | 195 | 160 | 120 | 360 | 280 | 18 | 406 | - |
| **NMS 80/200B/B** | 100 | 80 | 125 | 279 | 70 | 350 | 65 | 241 | 312 | 980 | 15 | 180 | 250 | 22 | 450 | 15 | 170 | 194 | 125 | 95 | 345 | 280 | 14 | 394 | - |
| **NMS 80/250D/A** | 100 | 80 | 125 | 318 | 70 | 390 | 80 | 305 | 370 | 1031 | 20 | 200 | 280 | 25 | 500 | 19 | 191 | 211 | 160 | 120 | 400 | 315 | 18 | 406 | - |
| **NMS 80/250C/A** | 100 | 80 | 125 | 318 | 70 | 390 | 80 | 305 | 370 | 1031 | 20 | 200 | 280 | 25 | 500 | 19 | 191 | 211 | 160 | 120 | 400 | 315 | 18 | 406 | - |
| **NMS 100/200C/A** | 125 | 100 | 125 | 318 | 70 | 390 | 80 | 305 | 370 | 1031 | 15 | 200 | 280 | 25 | 500 | 19 | 179 | 211 | 160 | 120 | 360 | 280 | 18 | 406 | 308 |
| **NMS 100/200B/A** | 125 | 100 | 125 | 318 | 70 | 390 | 80 | 305 | 370 | 1031 | 15 | 200 | 280 | 25 | 500 | 19 | 179 | 211 | 160 | 120 | 360 | 280 | 18 | 406 | - |

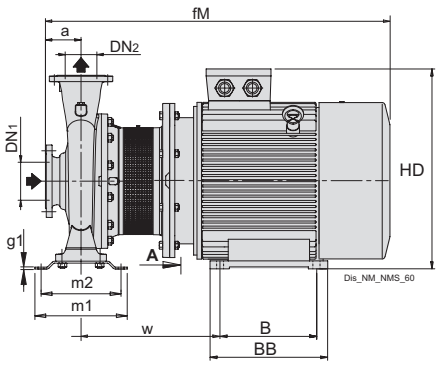


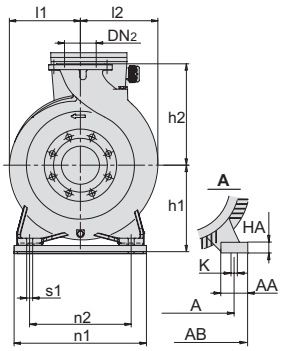


**Flanges EN 1092-2** PN 10-16

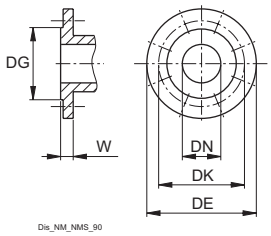


| mm | | | | | | |
|---|---|---|---|---|---|---|
| DN | DG | DK | DE | Holes N° | Holes ø | W |
| 32 | 76 | 100 | 140 | 4 | 19 | 18 |
| 40 | 84 | 110 | 150 | 4 | 19 | 18 |
| 50 | 99 | 125 | 165 | 4 | 19 | 20 |
| 65 | 118 | 145 | 185 | 4 | 19 | 20 |
| 80 | 132 | 160 | 200 | 8 | 19 | 22 |
| 100 | 156 | 180 | 220 | 8 | 19 | 24 |
| 125 | 184 | 210 | 250 | 8 | 19 | 24 |

| TYPE | | | mm | | | | | | | | | | | | | | | | | | | | |
|---|---|---|---|---|---|---|---|---|---|---|---|---|---|---|---|---|---|---|---|---|---|---|---|
| | DN1 | DN2 | a | A | AA | AB | B | BB | fM | g1 | h1 | h2 | HA | HD | K | l1 | l2 | m1 | m2 | n1 | n2 | s1 | w |
| **NMS 80/200A/B** | 100 | 80 | 125 | 318 | 70 | 390 | 305 | 370 | 1031 | 6 | 200 | 250 | 25 | 500 | 19 | 170 | 194 | 227 | 191 | 350 | 280 | 14 | 406 |
| **NMS 80/250B/A** | 100 | 80 | 125 | 356 | 75 | 431 | 311 | 395 | 1089 | 6 | 225 | 280 | 28 | 555 | 19 | 191 | 211 | 298 | 258 | 410 | 315 | 18 | 445 |
| **NMS 100/200A/A** | 125 | 100 | 125 | 356 | 75 | 431 | 311 | 395 | 1089 | 6 | 225 | 280 | 28 | 555 | 19 | 179 | 211 | 298 | 258 | 410 | 315 | 18 | 445 |
| **NMS 100/250A/A** | 125 | 100 | 140 | 457 | 85 | 545 | 368 | 485 | 1276 | 6 | 280 | 280 | 38 | 670 | 24 | 205 | 233 | 260 | 220 | 410 | 315 | 18 | 516 |

# NM, NMS

## Dimensions and weights with IE3 motor

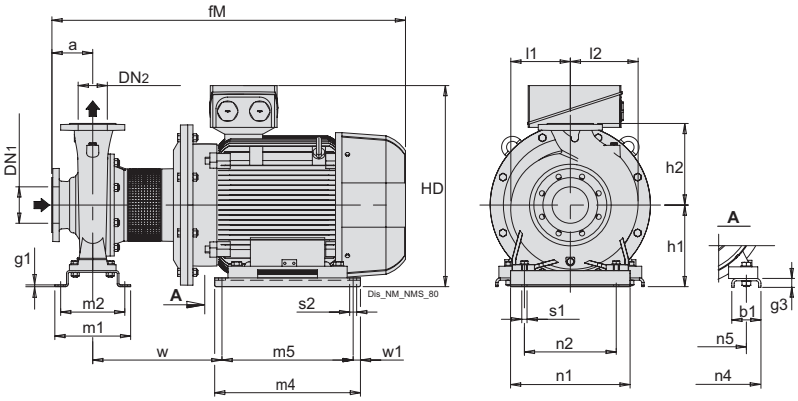


**Flanges EN 1092-2** PN 10-16

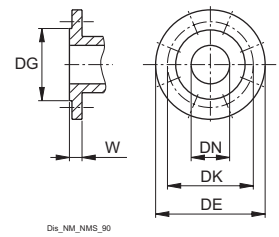


| mm | | | | | | |
|---|---|---|---|---|---|---|
| DN | DG | DK | DE | Holes N° | Holes ø | W |
| 32 | 76 | 100 | 140 | 4 | 19 | 18 |
| 40 | 84 | 110 | 150 | 4 | 19 | 18 |
| 50 | 99 | 125 | 165 | 4 | 19 | 20 |
| 65 | 118 | 145 | 185 | 4 | 19 | 20 |
| 80 | 132 | 160 | 200 | 8 | 19 | 22 |
| 100 | 156 | 180 | 220 | 8 | 19 | 24 |
| 125 | 184 | 210 | 250 | 8 | 19 | 24 |

| TYPE | | | mm | | | | | | | | | | | | | | | | | | | | | |
|---|---|---|---|---|---|---|---|---|---|---|---|---|---|---|---|---|---|---|---|---|---|---|---|---|
| | DN1 | DN2 | a | b1 | fM | g1 | g3 | h1 | h2 | HD | l1 | l2 | m1 | m2 | m4 | m5 | n1 | n2 | n4 | n5 | s1 | s2 | w | w1 |
| **NMS 80/250A/A** | 100 | 80 | 125 | 100 | 1321 | 6 | 30 | 280 | 280 | 642 | 191 | 211 | 260 | 220 | 570 | 520 | 410 | 315 | 506 | 406 | 18 | 24 | 408 | 25 |
| **NMS 100/250B/A** | 125 | 100 | 140 | 100 | 1336 | 6 | 30 | 280 | 280 | 642 | 205 | 233 | 260 | 220 | 570 | 520 | 410 | 315 | 506 | 406 | 18 | 24 | 408 | 25 |

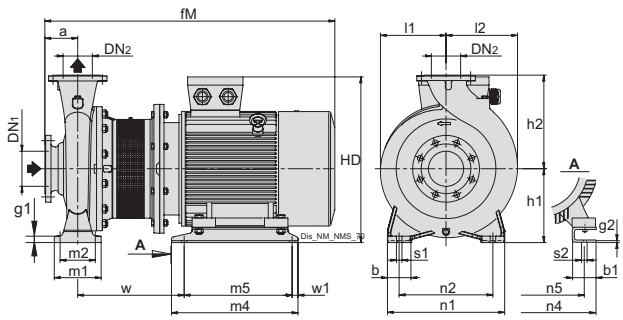


**Flanges EN 1092-2** PN 10-16

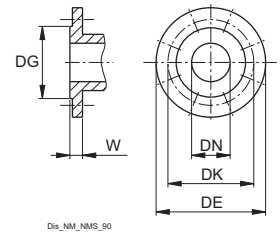


| mm | | | | | | |
|---|---|---|---|---|---|---|
| DN | DG | DK | DE | Holes N° | Holes ø | W |
| 32 | 76 | 100 | 140 | 4 | 19 | 18 |
| 40 | 84 | 110 | 150 | 4 | 19 | 18 |
| 50 | 99 | 125 | 165 | 4 | 19 | 20 |
| 65 | 118 | 145 | 185 | 4 | 19 | 20 |
| 80 | 132 | 160 | 200 | 8 | 19 | 22 |
| 100 | 156 | 180 | 220 | 8 | 19 | 24 |
| 125 | 184 | 210 | 250 | 8 | 19 | 24 |

| TYPE | | | mm | | | | | | | | | | | | | | | | | | | | | |
|---|---|---|---|---|---|---|---|---|---|---|---|---|---|---|---|---|---|---|---|---|---|---|---|---|
| | DN1 | DN2 | a | b | b1 | fM | g1 | g3 | h1 | h2 | HD | l1 | l2 | m1 | m2 | m4 | m5 | n1 | n2 | n4 | n5 | s1 | s2 | w | w1 |
| **NMS 65/250C** | 80 | 65 | 100 | 80 | 70 | 955 | 15 | 20 | 200 | 250 | 470 | 178 | 195 | 160 | 120 | 440 | 400 | 360 | 280 | 349 | 279 | 18 | 15 | 333 | 20 |
| **NMS 80/250E** | 100 | 80 | 125 | 80 | 70 | 980 | 20 | 20 | 200 | 280 | 470 | 191 | 211 | 160 | 120 | 440 | 400 | 400 | 315 | 349 | 279 | 18 | 15 | 333 | 20 |
| **NMS 100/200D/A** | 125 | 100 | 125 | 80 | 70 | 980 | 15 | 20 | 200 | 280 | 470 | 179 | 211 | 160 | 120 | 440 | 400 | 360 | 280 | 349 | 279 | 18 | 15 | 333 | 20 |

# NM, NMS

## Dimensions and weights with IE4 motor

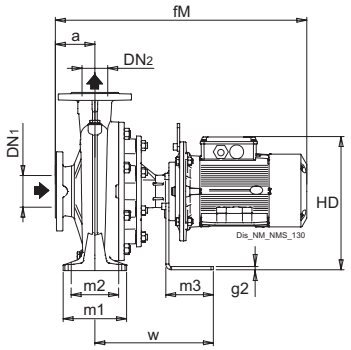


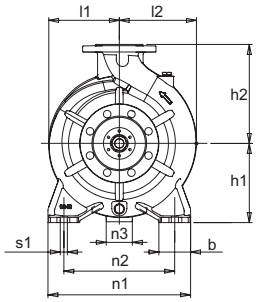


**Flanges EN 1092-2** PN 10-16

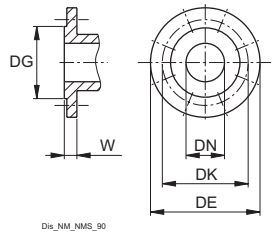


| mm | | | | | | |
|---|---|---|---|---|---|---|
| DN | DG | DK | DE | Holes N° | Holes ø | W |
| 32 | 76 | 100 | 140 | 4 | 19 | 18 |
| 40 | 84 | 110 | 150 | 4 | 19 | 18 |
| 50 | 99 | 125 | 165 | 4 | 19 | 20 |
| 65 | 118 | 145 | 185 | 4 | 19 | 20 |
| 80 | 132 | 160 | 200 | 8 | 19 | 22 |
| 100 | 156 | 180 | 220 | 8 | 19 | 24 |
| 125 | 184 | 210 | 250 | 8 | 19 | 24 |

| TYPE | | | mm | | | | | | | | | | | | | | | | | |
|---|---|---|---|---|---|---|---|---|---|---|---|---|---|---|---|---|---|---|---|---|
| | DN1 | DN2 | a | b | fM | g1 | g2 | h1 | h2 | HD | l1 | l2 | m1 | m2 | m3 | n1 | n2 | n3 | s1 | w |
| NMS 32/125D | 50 | 32 | 80 | 50 | 536 | 12 | 8 | 112 | 140 | 241 | 93 | 98 | 100 | 70 | 120 | 190 | 140 | 65 | 14 | 274 |
| NMS 32/125D-S | 50 | 32 | 80 | 50 | 536 | 12 | 8 | 112 | 140 | 241 | 93 | 98 | 100 | 70 | 120 | 190 | 140 | 65 | 14 | 274 |
| NMS 32/125A | 50 | 32 | 80 | 50 | 536 | 12 | 8 | 112 | 140 | 241 | 93 | 98 | 100 | 70 | 120 | 190 | 140 | 65 | 14 | 274 |
| NMS 32/125S | 50 | 32 | 80 | 50 | 576 | 12 | 8 | 112 | 140 | 241 | 93 | 98 | 100 | 70 | 120 | 190 | 140 | 65 | 14 | 274 |
| NMS 32/125A-S | 50 | 32 | 80 | 50 | 576 | 12 | 8 | 112 | 140 | 241 | 93 | 98 | 100 | 70 | 120 | 190 | 140 | 65 | 14 | 274 |
| NMS 32/160B | 50 | 32 | 80 | 50 | 576 | 12 | 8 | 132 | 160 | 261 | 119 | 119 | 100 | 70 | 120 | 240 | 190 | 65 | 14 | 274 |
| NMS 32/160B-S | 50 | 32 | 80 | 50 | 576 | 12 | 8 | 132 | 160 | 261 | 119 | 119 | 100 | 70 | 120 | 240 | 190 | 65 | 14 | 274 |
| NMS 32/160A | 50 | 32 | 80 | 50 | 576 | 12 | 8 | 132 | 160 | 261 | 119 | 119 | 100 | 70 | 120 | 240 | 190 | 65 | 14 | 274 |
| NMS 32/160A-S | 50 | 32 | 80 | 50 | 590 | 12 | 8 | 132 | 160 | 270 | 119 | 119 | 100 | 70 | 120 | 240 | 190 | 65 | 14 | 274 |
| NMS 32/200D | 50 | 32 | 80 | 50 | 576 | 12 | 8 | 160 | 180 | 289 | 140 | 140 | 100 | 70 | 120 | 240 | 190 | 65 | 14 | 274 |
| NMS 32/200D-S | 50 | 32 | 80 | 50 | 590 | 12 | 8 | 160 | 180 | 298 | 140 | 140 | 100 | 70 | 120 | 240 | 190 | 65 | 14 | 274 |
| NMS 32/200C | 50 | 32 | 80 | 50 | 590 | 12 | 8 | 160 | 180 | 298 | 140 | 140 | 100 | 70 | 120 | 240 | 190 | 65 | 14 | 274 |
| NMS 32/200A | 50 | 32 | 80 | 50 | 617 | 12 | 8 | 160 | 180 | 334 | 140 | 140 | 100 | 70 | 120 | 240 | 190 | 65 | 14 | 274 |
| NMS 32/200A-S | 50 | 32 | 80 | 50 | 646 | 12 | 8 | 160 | 180 | 320 | 140 | 140 | 100 | 70 | 250 | 240 | 190 | 130 | 14 | 407 |
| NMS 32L/160C | 50 | 32 | 80 | 50 | 576 | 10 | 8 | 132 | 160 | 261 | 121 | 121 | 100 | 70 | 120 | 240 | 190 | 65 | 14 | 274 |
| NMS 32L/160B | 50 | 32 | 80 | 50 | 590 | 10 | 8 | 132 | 160 | 270 | 121 | 121 | 100 | 70 | 120 | 240 | 190 | 65 | 14 | 274 |
| NMS 32L/160A | 50 | 32 | 80 | 50 | 617 | 10 | 8 | 132 | 160 | 306 | 121 | 121 | 100 | 70 | 120 | 240 | 190 | 65 | 14 | 274 |
| NMS 32L/200C | 50 | 32 | 80 | 50 | 617 | 12 | 8 | 160 | 180 | 334 | 142 | 142 | 100 | 70 | 120 | 240 | 190 | 65 | 14 | 274 |
| NMS 32L/200B | 50 | 32 | 80 | 50 | 646 | 12 | 8 | 160 | 180 | 320 | 142 | 142 | 100 | 70 | 250 | 240 | 190 | 130 | 14 | 407 |
| NMS 32L/200A | 50 | 32 | 80 | 50 | 763 | 12 | 8 | 160 | 180 | 352 | 142 | 142 | 100 | 70 | 250 | 240 | 190 | 130 | 14 | 407 |
| NMS 40/125F | 65 | 40 | 80 | 50 | 536 | 12 | 8 | 112 | 140 | 241 | 100 | 112 | 100 | 70 | 120 | 210 | 160 | 65 | 14 | 274 |
| NMS 40/125C | 65 | 40 | 80 | 50 | 576 | 12 | 8 | 112 | 140 | 241 | 100 | 112 | 100 | 70 | 120 | 210 | 160 | 65 | 14 | 274 |
| NMS 40/125A | 65 | 40 | 80 | 50 | 576 | 12 | 8 | 112 | 140 | 241 | 100 | 112 | 100 | 70 | 120 | 210 | 160 | 65 | 14 | 274 |
| NMS 40/160C | 65 | 40 | 80 | 50 | 576 | 10 | 8 | 132 | 160 | 261 | 120 | 122 | 100 | 70 | 120 | 240 | 190 | 65 | 14 | 274 |
| NMS 40/160B | 65 | 40 | 80 | 50 | 590 | 10 | 8 | 132 | 160 | 270 | 120 | 122 | 100 | 70 | 120 | 240 | 190 | 65 | 14 | 274 |
| NMS 40/160A | 65 | 40 | 80 | 50 | 617 | 10 | 8 | 132 | 160 | 306 | 120 | 122 | 100 | 70 | 120 | 240 | 190 | 65 | 14 | 274 |
| NMS 40/200D | 65 | 40 | 100 | 50 | 637 | 12 | 8 | 160 | 180 | 334 | 141 | 141 | 100 | 70 | 120 | 265 | 212 | 65 | 14 | 274 |
| NMS 40/200C | 65 | 40 | 100 | 50 | 637 | 12 | 8 | 160 | 180 | 334 | 141 | 141 | 100 | 70 | 120 | 265 | 212 | 65 | 14 | 274 |
| NMS 40/200D-S | 65 | 40 | 100 | 50 | 666 | 12 | 8 | 160 | 180 | 320 | 141 | 141 | 100 | 70 | 250 | 265 | 212 | 130 | 14 | 407 |
| NMS 40/200C-S | 65 | 40 | 100 | 50 | 666 | 12 | 8 | 160 | 180 | 320 | 141 | 141 | 100 | 70 | 250 | 265 | 212 | 130 | 14 | 407 |
| NMS 40/200B | 65 | 40 | 100 | 50 | 666 | 12 | 8 | 160 | 180 | 320 | 141 | 141 | 100 | 70 | 250 | 265 | 212 | 130 | 14 | 407 |
| NMS 40/200AR | 65 | 40 | 100 | 50 | 666 | 12 | 8 | 160 | 180 | 320 | 141 | 141 | 100 | 70 | 250 | 265 | 212 | 130 | 14 | 407 |
| NMS 40/200B-S | 65 | 40 | 100 | 50 | 783 | 12 | 8 | 160 | 180 | 352 | 141 | 141 | 100 | 70 | 250 | 265 | 212 | 130 | 14 | 407 |
| NMS 40/200AR-S | 65 | 40 | 100 | 50 | 783 | 12 | 8 | 160 | 180 | 352 | 141 | 141 | 100 | 70 | 250 | 265 | 212 | 130 | 14 | 407 |
| NMS 40/200A | 65 | 40 | 100 | 50 | 783 | 12 | 8 | 160 | 180 | 352 | 141 | 141 | 100 | 70 | 250 | 265 | 212 | 130 | 14 | 407 |
| NMS 50/125F | 65 | 50 | 100 | 50 | 596 | 10 | 8 | 132 | 160 | 261 | 122 | 137 | 100 | 70 | 120 | 240 | 190 | 65 | 14 | 274 |
| NMS 50/125D | 65 | 50 | 100 | 50 | 610 | 10 | 8 | 132 | 160 | 270 | 122 | 137 | 100 | 70 | 120 | 240 | 190 | 65 | 14 | 274 |
| NMS 50/125A | 65 | 50 | 100 | 50 | 637 | 10 | 8 | 132 | 160 | 306 | 122 | 137 | 100 | 70 | 120 | 240 | 190 | 65 | 14 | 274 |
| NMS 50/125S | 65 | 50 | 100 | 50 | 637 | 10 | 8 | 132 | 160 | 306 | 122 | 137 | 100 | 70 | 120 | 240 | 190 | 65 | 14 | 274 |
| NMS 50/160B | 65 | 50 | 100 | 50 | 666 | 12 | 8 | 160 | 180 | 320 | 125 | 140 | 100 | 70 | 250 | 265 | 212 | 130 | 14 | 407 |
| NMS 50/160A | 65 | 50 | 100 | 50 | 783 | 12 | 8 | 160 | 180 | 352 | 125 | 140 | 100 | 70 | 250 | 265 | 212 | 130 | 14 | 407 |
| NMS 65/125E | 80 | 65 | 100 | 65 | 637 | 12 | 8 | 160 | 180 | 334 | 130 | 154 | 125 | 95 | 120 | 280 | 212 | 65 | 14 | 274 |
| NMS 65/125C | 80 | 65 | 100 | 65 | 666 | 12 | 8 | 160 | 180 | 320 | 130 | 154 | 125 | 95 | 250 | 280 | 212 | 130 | 14 | 407 |
| NMS 65/125A | 80 | 65 | 100 | 65 | 783 | 12 | 8 | 160 | 180 | 352 | 130 | 154 | 125 | 95 | 250 | 280 | 212 | 130 | 14 | 407 |
| NMS 65/160D | 80 | 65 | 100 | 65 | 783 | 12 | 8 | 160 | 200 | 352 | 140 | 161 | 125 | 95 | 250 | 280 | 212 | 130 | 14 | 407 |
| NMS 80/160E | 100 | 80 | 125 | 65 | 808 | 12 | 8 | 180 | 225 | 372 | 152 | 181 | 125 | 95 | 250 | 320 | 250 | 130 | 14 | 407 |

# NM, NMS

## Dimensions and weights with IE4 motor

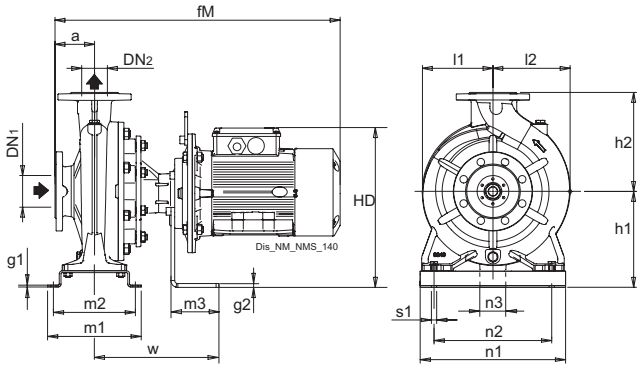


**Flanges EN 1092-2** PN 10-16

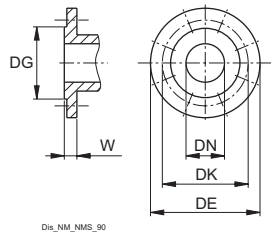


| mm | | | | | | |
|---|---|---|---|---|---|---|
| DN | DG | DK | DE | Holes N° | Holes ø | W |
| 32 | 76 | 100 | 140 | 4 | 19 | 18 |
| 40 | 84 | 110 | 150 | 4 | 19 | 18 |
| 50 | 99 | 125 | 165 | 4 | 19 | 20 |
| 65 | 118 | 145 | 185 | 4 | 19 | 20 |
| 80 | 132 | 160 | 200 | 8 | 19 | 22 |
| 100 | 156 | 180 | 220 | 8 | 19 | 24 |
| 125 | 184 | 210 | 250 | 8 | 19 | 24 |

| TYPE | | | mm | | | | | | | | | | | | | | | | |
|---|---|---|---|---|---|---|---|---|---|---|---|---|---|---|---|---|---|---|---|
| | DN1 | DN2 | a | fM | g1 | g2 | h1 | h2 | HD | l1 | l2 | m1 | m2 | m3 | n1 | n2 | n3 | s1 | w |
| NMS 40/160A-S | 65 | 40 | 80 | 646 | 4 | 8 | 180 | 160 | 340 | 120 | 122 | 190 | 190 | 250 | 250 | 190 | 130 | 14 | 407 |
| NMS 50/125S-S | 65 | 50 | 100 | 666 | 4 | 8 | 180 | 160 | 340 | 122 | 137 | 190 | 190 | 250 | 250 | 190 | 130 | 14 | 407 |

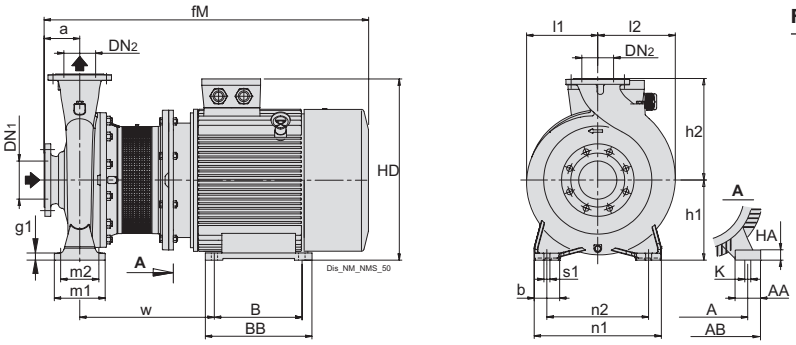


**Flanges EN 1092-2** PN 10-16

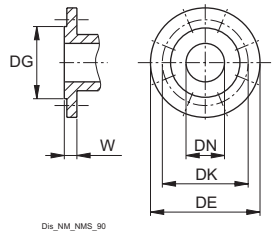


| mm | | | | | | |
|---|---|---|---|---|---|---|
| DN | DG | DK | DE | Holes N° | Holes ø | W |
| 32 | 76 | 100 | 140 | 4 | 19 | 18 |
| 40 | 84 | 110 | 150 | 4 | 19 | 18 |
| 50 | 99 | 125 | 165 | 4 | 19 | 20 |
| 65 | 118 | 145 | 185 | 4 | 19 | 20 |
| 80 | 132 | 160 | 200 | 8 | 19 | 22 |
| 100 | 156 | 180 | 220 | 8 | 19 | 24 |
| 125 | 184 | 210 | 250 | 8 | 19 | 24 |

| TYPE | | | mm | | | | | | | | | | | | | | | | | | | | | kg |
|---|---|---|---|---|---|---|---|---|---|---|---|---|---|---|---|---|---|---|---|---|---|---|---|---|
| | DN1 | DN2 | a | A | AA | AB | b | B | BB | fM | g1 | h1 | h2 | HA | HD | K | l1 | l2 | m1 | m2 | n1 | n2 | s1 | w | Weight |
| NMS 65/200A | 80 | 65 | 100 | 279 | 70 | 350 | 65 | 241 | 315 | 915 | 12 | 180 | 225 | 22 | 450 | 15 | 159 | 179 | 125 | 95 | 320 | 250 | 14 | 394 | - |
| NMS 65/250B/B | 80 | 65 | 100 | 318 | 70 | 388 | 80 | 305 | 370 | 1001 | 15 | 200 | 250 | 25 | 500 | 19 | 178 | 195 | 160 | 120 | 360 | 280 | 18 | 406 | - |
| NMS 65/250A/B | 80 | 65 | 100 | 318 | 70 | 388 | 80 | 305 | 370 | 1001 | 15 | 200 | 250 | 25 | 500 | 19 | 178 | 195 | 160 | 120 | 360 | 280 | 18 | 406 | - |
| NMS 80/200B/B | 100 | 80 | 125 | 279 | 70 | 350 | 65 | 241 | 315 | 940 | 15 | 180 | 250 | 22 | 450 | 15 | 170 | 194 | 125 | 95 | 345 | 280 | 14 | 394 | - |
| NMS 80/250D/A | 100 | 80 | 125 | 318 | 70 | 388 | 80 | 305 | 370 | 1026 | 20 | 200 | 280 | 25 | 500 | 19 | 191 | 211 | 160 | 120 | 400 | 315 | 18 | 406 | - |
| NMS 80/250C/A | 100 | 80 | 125 | 318 | 70 | 388 | 80 | 305 | 370 | 1026 | 20 | 200 | 280 | 25 | 500 | 19 | 191 | 211 | 160 | 120 | 400 | 315 | 18 | 406 | 329.5 |
| NMS 100/200C/A | 125 | 100 | 125 | 318 | 70 | 388 | 80 | 305 | 370 | 1026 | 15 | 200 | 280 | 25 | 500 | 19 | 179 | 211 | 160 | 120 | 360 | 280 | 18 | 406 | - |
| NMS 100/200B/A | 125 | 100 | 125 | 318 | 70 | 388 | 80 | 305 | 370 | 1026 | 15 | 200 | 280 | 25 | 500 | 19 | 179 | 211 | 160 | 120 | 360 | 280 | 18 | 406 | - |

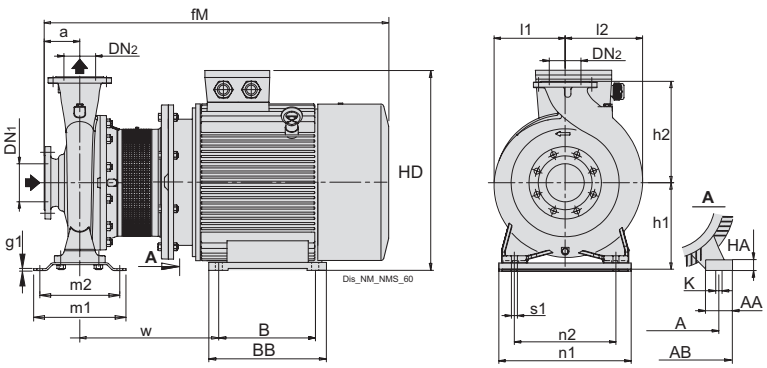


**Flanges EN 1092-2** PN 10-16

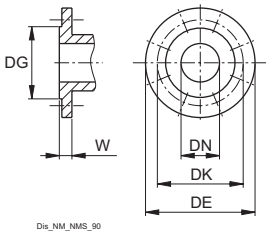


| mm | | | | | | |
|---|---|---|---|---|---|---|
| DN | DG | DK | DE | Holes N° | Holes ø | W |
| 32 | 76 | 100 | 140 | 4 | 19 | 18 |
| 40 | 84 | 110 | 150 | 4 | 19 | 18 |
| 50 | 99 | 125 | 165 | 4 | 19 | 20 |
| 65 | 118 | 145 | 185 | 4 | 19 | 20 |
| 80 | 132 | 160 | 200 | 8 | 19 | 22 |
| 100 | 156 | 180 | 220 | 8 | 19 | 24 |
| 125 | 184 | 210 | 250 | 8 | 19 | 24 |

| TYPE | | | mm | | | | | | | | | | | | | | | | | | | | |
|---|---|---|---|---|---|---|---|---|---|---|---|---|---|---|---|---|---|---|---|---|---|---|---|
| | DN1 | DN2 | a | A | AA | AB | B | BB | fM | g1 | h1 | h2 | HA | HD | K | l1 | l2 | m1 | m2 | n1 | n2 | s1 | w |
| NMS 80/200A/B | 100 | 80 | 125 | 318 | 70 | 388 | 305 | 370 | 1026 | 6 | 200 | 250 | 25 | 500 | 19 | 170 | 194 | 227 | 191 | 350 | 280 | 14 | 406 |
| NMS 80/250B/A | 100 | 80 | 125 | 356 | 75 | 431 | 311 | 395 | 1125 | 6 | 225 | 280 | 28 | 548 | 19 | 191 | 211 | 298 | 258 | 410 | 315 | 18 | 445 |
| NMS 100/200A/A | 125 | 100 | 125 | 356 | 75 | 431 | 311 | 395 | 1125 | 6 | 225 | 280 | 28 | 548 | 19 | 179 | 211 | 298 | 258 | 410 | 315 | 18 | 445 |
| NMS 100/250A/A | 125 | 100 | 140 | 457 | 85 | 545 | 368 | 490 | 1264 | 6 | 280 | 280 | 35 | 669 | 24 | 205 | 233 | 260 | 220 | 410 | 315 | 18 | 516 |

# NM, NMS

## Dimensions and weights with IE4 motor

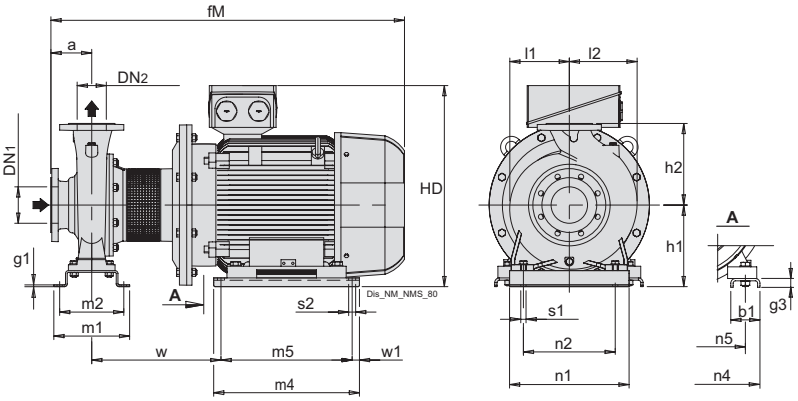


**Flanges EN 1092-2** PN 10-16

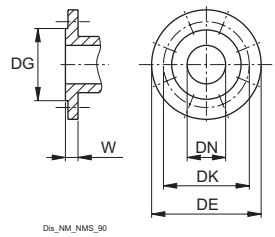


| mm | | | | | | |
|---|---|---|---|---|---|---|
| DN | DG | DK | DE | Holes N° | Holes ø | W |
| 32 | 76 | 100 | 140 | 4 | 19 | 18 |
| 40 | 84 | 110 | 150 | 4 | 19 | 18 |
| 50 | 99 | 125 | 165 | 4 | 19 | 20 |
| 65 | 118 | 145 | 185 | 4 | 19 | 20 |
| 80 | 132 | 160 | 200 | 8 | 19 | 22 |
| 100 | 156 | 180 | 220 | 8 | 19 | 24 |
| 125 | 184 | 210 | 250 | 8 | 19 | 24 |

| TYPE | | | mm | | | | | | | | | | | | | | | | | | | | | |
|---|---|---|---|---|---|---|---|---|---|---|---|---|---|---|---|---|---|---|---|---|---|---|---|---|
| | DN1 | DN2 | a | b1 | fM | g1 | g3 | h1 | h2 | HD | l1 | l2 | m1 | m2 | m4 | m5 | n1 | n2 | n4 | n5 | s1 | s2 | w | w1 |
| NMS 50/200B | 65 | 50 | 100 | 80 | 829 | 4 | 20 | 180 | 200 | 433 | 142 | 152 | 245 | 212 | 394 | 354 | 290 | 215 | 334 | 254 | 14 | 15 | 314 | 20 |
| NMS 50/200A | 65 | 50 | 100 | 80 | 829 | 4 | 20 | 180 | 200 | 433 | 142 | 152 | 245 | 212 | 394 | 354 | 290 | 215 | 334 | 254 | 14 | 15 | 314 | 20 |
| NMS 50/200S | 65 | 50 | 100 | 80 | 829 | 4 | 20 | 180 | 200 | 433 | 142 | 152 | 245 | 212 | 394 | 354 | 290 | 215 | 334 | 254 | 14 | 15 | 314 | 20 |
| NMS 65/160C | 80 | 65 | 100 | 80 | 829 | 4 | 20 | 180 | 200 | 433 | 140 | 161 | 245 | 212 | 394 | 354 | 290 | 215 | 334 | 254 | 14 | 15 | 314 | 20 |
| NMS 65/160B | 80 | 65 | 100 | 80 | 829 | 4 | 20 | 180 | 200 | 433 | 140 | 161 | 245 | 212 | 394 | 354 | 290 | 215 | 334 | 254 | 14 | 15 | 314 | 20 |
| NMS 65/160AR | 80 | 65 | 100 | 80 | 829 | 4 | 20 | 180 | 200 | 433 | 140 | 161 | 245 | 212 | 394 | 354 | 290 | 215 | 334 | 254 | 14 | 15 | 314 | 20 |
| NMS 65/160A | 80 | 65 | 100 | 80 | 829 | 4 | 20 | 180 | 200 | 433 | 140 | 161 | 245 | 212 | 394 | 354 | 290 | 215 | 334 | 254 | 14 | 15 | 314 | 20 |
| NMS 80/250A/A | 100 | 80 | 125 | 100 | 1187 | 6 | 30 | 280 | 280 | 642 | 191 | 211 | 260 | 220 | 570 | 520 | 410 | 315 | 506 | 406 | 18 | 24 | 408 | 25 |
| NMS 100/250B/A | 125 | 100 | 140 | 100 | 1202 | 6 | 30 | 280 | 280 | 642 | 205 | 233 | 260 | 220 | 570 | 520 | 410 | 315 | 506 | 406 | 18 | 24 | 408 | 25 |

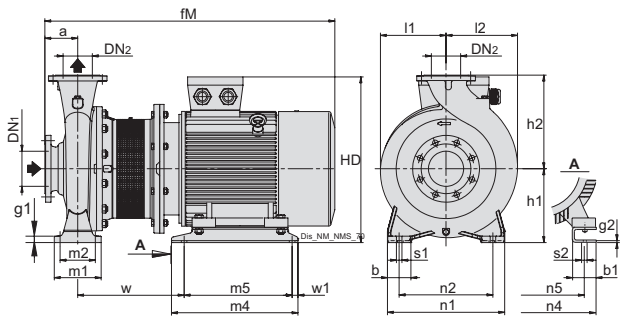


**Flanges EN 1092-2** PN 10-16

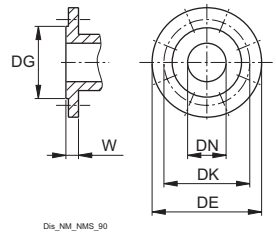


| mm | | | | | | |
|---|---|---|---|---|---|---|
| DN | DG | DK | DE | Holes N° | Holes ø | W |
| 32 | 76 | 100 | 140 | 4 | 19 | 18 |
| 40 | 84 | 110 | 150 | 4 | 19 | 18 |
| 50 | 99 | 125 | 165 | 4 | 19 | 20 |
| 65 | 118 | 145 | 185 | 4 | 19 | 20 |
| 80 | 132 | 160 | 200 | 8 | 19 | 22 |
| 100 | 156 | 180 | 220 | 8 | 19 | 24 |
| 125 | 184 | 210 | 250 | 8 | 19 | 24 |

| TYPE | | | mm | | | | | | | | | | | | | | | | | | | | | |
|---|---|---|---|---|---|---|---|---|---|---|---|---|---|---|---|---|---|---|---|---|---|---|---|---|
| | DN1 | DN2 | a | b | b1 | fM | g1 | g3 | h1 | h2 | HD | l1 | l2 | m1 | m2 | m4 | m5 | n1 | n2 | n4 | n5 | s1 | s2 | w | w1 |
| NMS 40/250C | 65 | 40 | 100 | 65 | 80 | 829 | 15 | 20 | 180 | 225 | 433 | 177 | 177 | 125 | 95 | 394 | 354 | 320 | 250 | 334 | 254 | 14 | 15 | 314 | 20 |
| NMS 40/250B | 65 | 40 | 100 | 65 | 80 | 829 | 15 | 20 | 180 | 225 | 433 | 177 | 177 | 125 | 95 | 394 | 354 | 320 | 250 | 334 | 254 | 14 | 15 | 314 | 20 |
| NMS 40/250A | 65 | 40 | 100 | 65 | 80 | 829 | 15 | 20 | 180 | 225 | 433 | 177 | 177 | 125 | 95 | 394 | 354 | 320 | 250 | 334 | 254 | 14 | 15 | 314 | 20 |
| NMS 50/250C | 65 | 50 | 100 | 65 | 80 | 829 | 15 | 20 | 180 | 225 | 433 | 177 | 177 | 125 | 95 | 394 | 354 | 320 | 250 | 334 | 254 | 14 | 15 | 314 | 20 |
| NMS 50/250B | 65 | 50 | 100 | 65 | 80 | 829 | 15 | 20 | 180 | 225 | 433 | 177 | 177 | 125 | 95 | 394 | 354 | 320 | 250 | 334 | 254 | 14 | 15 | 314 | 20 |
| NMS 50/250A | 65 | 50 | 100 | 65 | 80 | 873 | 15 | 20 | 180 | 225 | 433 | 177 | 177 | 125 | 95 | 394 | 354 | 320 | 250 | 334 | 254 | 14 | 15 | 314 | 20 |
| NMS 65/200C | 80 | 65 | 100 | 65 | 80 | 829 | 12 | 20 | 180 | 225 | 433 | 159 | 179 | 125 | 95 | 394 | 354 | 320 | 250 | 334 | 254 | 14 | 15 | 314 | 20 |
| NMS 65/200B | 80 | 65 | 100 | 65 | 80 | 873 | 12 | 20 | 180 | 225 | 433 | 159 | 179 | 125 | 95 | 394 | 354 | 320 | 250 | 334 | 254 | 14 | 15 | 314 | 20 |
| NMS 65/250C | 80 | 65 | 100 | 80 | 70 | 915 | 15 | 20 | 200 | 250 | 470 | 178 | 195 | 160 | 120 | 440 | 400 | 360 | 280 | 349 | 279 | 18 | 15 | 333 | 20 |
| NMS 80/160D | 100 | 80 | 125 | 65 | 80 | 854 | 12 | 20 | 180 | 225 | 433 | 152 | 181 | 125 | 95 | 394 | 354 | 320 | 250 | 334 | 254 | 14 | 15 | 314 | 20 |
| NMS 80/160C | 100 | 80 | 125 | 65 | 80 | 854 | 12 | 20 | 180 | 225 | 433 | 152 | 181 | 125 | 95 | 394 | 354 | 320 | 250 | 334 | 254 | 14 | 15 | 314 | 20 |
| NMS 80/160B | 100 | 80 | 125 | 65 | 80 | 854 | 12 | 20 | 180 | 225 | 433 | 152 | 181 | 125 | 95 | 394 | 354 | 320 | 250 | 334 | 254 | 14 | 15 | 314 | 20 |
| NMS 80/160A | 100 | 80 | 125 | 65 | 80 | 898 | 12 | 20 | 180 | 225 | 433 | 152 | 181 | 125 | 95 | 394 | 354 | 320 | 250 | 334 | 254 | 14 | 15 | 314 | 20 |
| NMS 80/250E | 100 | 80 | 125 | 80 | 70 | 940 | 20 | 20 | 200 | 280 | 470 | 191 | 211 | 160 | 120 | 440 | 400 | 400 | 315 | 349 | 279 | 18 | 15 | 333 | 20 |
| NMS 100/200E | 125 | 100 | 125 | 80 | 60 | 923 | 15 | 40 | 200 | 280 | 453 | 179 | 211 | 160 | 120 | 394 | 354 | 360 | 280 | 314 | 254 | 18 | 15 | 339 | 20 |
| NMS 100/200D/A | 125 | 100 | 125 | 80 | 70 | 940 | 15 | 20 | 200 | 280 | 470 | 179 | 211 | 160 | 120 | 440 | 400 | 360 | 280 | 349 | 279 | 18 | 15 | 333 | 20 |

# NM, NMS

## Dimensions and weights

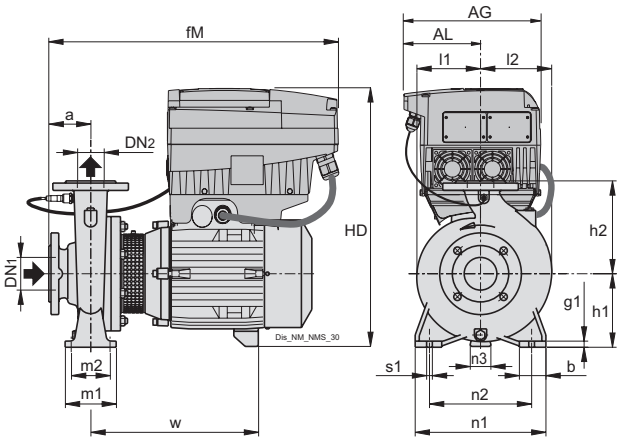


**Flanges EN 1092-2** PN 10-16

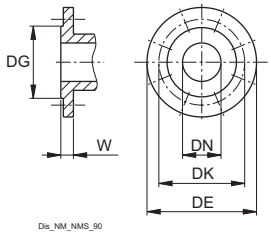


| mm | | | | | | |
|---|---|---|---|---|---|---|
| DN | DG | DK | DE | Holes N° | Holes ø | W |
| 32 | 76 | 100 | 140 | 4 | 19 | 18 |
| 40 | 84 | 110 | 150 | 4 | 19 | 18 |
| 50 | 99 | 125 | 165 | 4 | 19 | 20 |
| 65 | 118 | 145 | 185 | 4 | 19 | 20 |
| 80 | 132 | 160 | 200 | 8 | 19 | 22 |
| 100 | 156 | 180 | 220 | 8 | 19 | 24 |
| 125 | 184 | 210 | 250 | 8 | 19 | 24 |

| TYPE | | | mm | | | | | | | | | | | | | | | | | | kg |
|---|---|---|---|---|---|---|---|---|---|---|---|---|---|---|---|---|---|---|---|---|---|
| | DN1 | DN2 | a | AG | AL | b | fM | g1 | h1 | h2 | HD | l1 | l2 | m1 | m2 | n1 | n2 | n3 | s1 | w | Weight |
| NM EI 32/12FE | 50 | 32 | 80 | 190 | 105 | 50 | 408 | 12 | 112 | 140 | 397 | 93 | 98 | 100 | 70 | 190 | 140 | 31 | 14 | 248 | 30.2 |
| NM EI 32/12DE | 50 | 32 | 80 | 190 | 105 | 50 | 408 | 12 | 112 | 140 | 397 | 93 | 98 | 100 | 70 | 190 | 140 | 31 | 14 | 248 | - |
| NM EI 32/12A/A | 50 | 32 | 80 | 190 | 105 | 50 | 408 | 12 | 112 | 140 | 397 | 93 | 98 | 100 | 70 | 190 | 140 | 31 | 14 | 248 | 32.7 |
| NM EI 32/12S/A | 50 | 32 | 80 | 190 | 105 | 50 | 408 | 12 | 112 | 140 | 397 | 93 | 98 | 100 | 70 | 190 | 140 | 31 | 14 | 248 | 33.8 |
| NM EI 32/16B/A | 50 | 32 | 80 | 190 | 105 | 50 | 413 | 12 | 132 | 160 | 417 | 119 | 119 | 100 | 70 | 240 | 190 | 35 | 14 | 255 | - |
| NM EI 32/16A/B | 50 | 32 | 80 | 210 | 118 | 50 | 453 | 12 | 132 | 160 | 417 | 119 | 119 | 100 | 70 | 240 | 190 | 35 | 14 | 295 | - |
| NM EI 32/20D/B | 50 | 32 | 80 | 210 | 118 | 50 | 453 | 12 | 160 | 180 | 445 | 140 | 140 | 100 | 70 | 240 | 190 | 40 | 14 | 297 | - |
| NM EI 32/20C/A | 50 | 32 | 80 | 210 | 118 | 50 | 479 | 12 | 160 | 180 | 455 | 140 | 140 | 100 | 70 | 240 | 190 | 37 | 14 | 297 | 55.2 |
| NM EI 32/20A/B | 50 | 32 | 80 | 210 | 118 | 50 | 479 | 12 | 160 | 180 | 455 | 140 | 140 | 100 | 70 | 240 | 190 | 37 | 14 | 297 | 58.7 |
| NM EI 32L/16C | 50 | 32 | 80 | 210 | 118 | 50 | 453 | 10 | 132 | 160 | 417 | 121 | 121 | 100 | 70 | 240 | 190 | 35 | 14 | 295 | 43 |
| NM EI 32L/16B | 50 | 32 | 80 | 210 | 118 | 50 | 479 | 10 | 132 | 160 | 427 | 121 | 121 | 100 | 70 | 240 | 190 | 32 | 14 | 294 | 51.2 |
| NM EI 32L/16A | 50 | 32 | 80 | 210 | 118 | 50 | 479 | 10 | 132 | 160 | 427 | 121 | 121 | 100 | 70 | 240 | 190 | 32 | 14 | 294 | 54.3 |
| NM EI 32L/20C | 50 | 32 | 80 | 210 | 118 | 50 | 479 | 12 | 160 | 180 | 455 | 142 | 142 | 100 | 70 | 240 | 190 | 37 | 14 | 297 | 57.9 |
| NM EI 32L/20B | 50 | 32 | 80 | 210 | 118 | 50 | 539 | 12 | 160 | 180 | 484 | 142 | 142 | 100 | 70 | 240 | 190 | 34 | 14 | 335 | - |
| NM EI 32L/20A | 50 | 32 | 80 | 281 | 154 | 50 | 539 | 12 | 160 | 180 | 526 | 142 | 142 | 100 | 70 | 240 | 190 | 34 | 14 | 335 | - |
| NM EI 40/12F/B | 65 | 40 | 80 | 190 | 105 | 50 | 413 | 12 | 112 | 140 | 397 | 100 | 112 | 100 | 70 | 210 | 160 | 31 | 14 | 253 | 34.8 |
| NM EI 40/12C/B | 65 | 40 | 80 | 190 | 105 | 50 | 413 | 12 | 112 | 140 | 397 | 100 | 112 | 100 | 70 | 210 | 160 | 31 | 14 | 253 | 36.5 |
| NM EI 40/12A/C | 65 | 40 | 80 | 210 | 118 | 50 | 453 | 12 | 112 | 140 | 397 | 100 | 112 | 100 | 70 | 210 | 160 | 31 | 14 | 293 | 40 |
| NM EI 40/16C/C | 65 | 40 | 80 | 210 | 118 | 50 | 453 | 10 | 132 | 160 | 417 | 120 | 122 | 100 | 70 | 240 | 190 | 35 | 14 | 295 | - |
| NM EI 40/16B/B | 65 | 40 | 80 | 210 | 118 | 50 | 479 | 10 | 132 | 160 | 427 | 120 | 122 | 100 | 70 | 240 | 190 | 32 | 14 | 294 | 52 |
| NM EI 40/16A/C | 65 | 40 | 80 | 210 | 118 | 50 | 479 | 10 | 132 | 160 | 427 | 120 | 122 | 100 | 70 | 240 | 190 | 32 | 14 | 294 | 55.5 |
| NM EI 40/20D/B | 65 | 40 | 100 | 210 | 118 | 50 | 499 | 12 | 160 | 180 | 455 | 141 | 141 | 100 | 70 | 265 | 212 | 37 | 14 | 297 | - |
| NM EI 40/20C/B | 65 | 40 | 100 | 210 | 118 | 50 | 499 | 12 | 160 | 180 | 455 | 141 | 141 | 100 | 70 | 265 | 212 | 37 | 14 | 297 | - |
| NM EI 40/20B/A | 65 | 40 | 100 | 210 | 118 | 50 | 559 | 12 | 160 | 180 | 484 | 141 | 141 | 100 | 70 | 265 | 212 | 34 | 14 | 335 | 74.5 |
| NM EI 40/20AR/A | 65 | 40 | 100 | 210 | 118 | 50 | 559 | 12 | 160 | 180 | 484 | 141 | 141 | 100 | 70 | 265 | 212 | 34 | 14 | 335 | 73.1 |
| NM EI 40/20A/A | 65 | 40 | 100 | 281 | 154 | 50 | 559 | 12 | 160 | 180 | 526 | 141 | 141 | 100 | 70 | 265 | 212 | 34 | 14 | 335 | 86 |
| NM EI 40/25C/C | 65 | 40 | 100 | 281 | 154 | 65 | 639 | 15 | 180 | 225 | 569 | 177 | 177 | 125 | 95 | 320 | 250 | 35 | 14 | 397 | 123 |
| NM EI 40/25B/C | 65 | 40 | 100 | 281 | 154 | 65 | 639 | 15 | 180 | 225 | 569 | 177 | 177 | 125 | 95 | 320 | 250 | 35 | 14 | 397 | 131 |
| NM EI 40/25A/C | 65 | 40 | 100 | 350 | 190 | 65 | 714 | 15 | 180 | 225 | 649 | 177 | 177 | 125 | 95 | 320 | 250 | 35 | 14 | 472 | - |
| NM EI 50/12F/C | 65 | 50 | 100 | 210 | 118 | 50 | 473 | 10 | 132 | 160 | 417 | 122 | 137 | 100 | 70 | 240 | 190 | 35 | 14 | 295 | 45.5 |
| NM EI 50/12D/B | 65 | 50 | 100 | 210 | 118 | 50 | 499 | 10 | 132 | 160 | 427 | 122 | 137 | 100 | 70 | 240 | 190 | 32 | 14 | 294 | 52.6 |
| NM EI 50/12A/C | 65 | 50 | 100 | 210 | 118 | 50 | 499 | 10 | 132 | 160 | 427 | 122 | 137 | 100 | 70 | 240 | 190 | 32 | 14 | 294 | - |
| NM EI 50/12S/C | 65 | 50 | 100 | 210 | 118 | 50 | 499 | 10 | 132 | 160 | 427 | 122 | 137 | 100 | 70 | 240 | 190 | 32 | 14 | 294 | 56.1 |
| NM EI 50/16B/B | 65 | 50 | 100 | 210 | 118 | 50 | 559 | 12 | 160 | 180 | 484 | 125 | 140 | 100 | 70 | 265 | 212 | 34 | 14 | 335 | 73 |
| NM EI 50/16A/B | 65 | 50 | 100 | 281 | 154 | 50 | 559 | 12 | 160 | 180 | 526 | 125 | 140 | 100 | 70 | 265 | 212 | 34 | 14 | 335 | 85.5 |
| NM EI 50/20B/C | 65 | 50 | 100 | 281 | 154 | 50 | 639 | 14 | 160 | 200 | 549 | 142 | 152 | 100 | 70 | 265 | 212 | 31 | 14 | 395 | 115 |
| NM EI 50/20A/C | 65 | 50 | 100 | 281 | 154 | 50 | 639 | 14 | 160 | 200 | 549 | 142 | 152 | 100 | 70 | 265 | 212 | 31 | 14 | 395 | 123 |
| NM EI 50/20S/C | 65 | 50 | 100 | 350 | 190 | 50 | 714 | 14 | 160 | 200 | 629 | 142 | 152 | 100 | 70 | 265 | 212 | 31 | 14 | 470 | 163.2 |
| NM EI 50/25C/C | 65 | 50 | 100 | 281 | 154 | 65 | 644 | 15 | 180 | 225 | 569 | 177 | 177 | 125 | 95 | 320 | 250 | 35 | 14 | 402 | 135.1 |
| NM EI 50/25B/C | 65 | 50 | 100 | 350 | 190 | 65 | 719 | 15 | 180 | 225 | 649 | 177 | 177 | 125 | 95 | 320 | 250 | 35 | 14 | 477 | 175.5 |
| NM EI 65/12E/C | 80 | 65 | 100 | 210 | 118 | 65 | 504 | 12 | 160 | 180 | 455 | 130 | 154 | 125 | 95 | 280 | 212 | 37 | 14 | 302 | 59 |
| NM EI 65/12C/B | 80 | 65 | 100 | 210 | 118 | 65 | 564 | 12 | 160 | 180 | 484 | 130 | 154 | 125 | 95 | 280 | 212 | 34 | 14 | 340 | - |
| NM EI 65/12A/B | 80 | 65 | 100 | 281 | 154 | 65 | 564 | 12 | 160 | 180 | 526 | 130 | 154 | 125 | 95 | 280 | 212 | 34 | 14 | 340 | - |
| NM EI 65/16D/B | 80 | 65 | 100 | 281 | 154 | 65 | 559 | 12 | 160 | 200 | 526 | 140 | 161 | 125 | 95 | 280 | 212 | 34 | 14 | 335 | 87 |
| NM EI 65/16C/C | 80 | 65 | 100 | 281 | 154 | 65 | 639 | 12 | 160 | 200 | 549 | 140 | 161 | 125 | 95 | 280 | 212 | 31 | 14 | 395 | 108.8 |
| NM EI 65/16B/C | 80 | 65 | 100 | 281 | 154 | 65 | 639 | 12 | 160 | 200 | 549 | 140 | 161 | 125 | 95 | 280 | 212 | 31 | 14 | 395 | 135 |
| NM EI 65/16AR | 80 | 65 | 100 | 350 | 190 | 65 | 714 | 12 | 160 | 200 | 629 | 140 | 161 | 125 | 95 | 280 | 212 | 31 | 14 | 470 | - |
| NM EI 65/16A/C | 80 | 65 | 100 | 350 | 190 | 65 | 714 | 12 | 160 | 200 | 629 | 140 | 161 | 125 | 95 | 280 | 212 | 31 | 14 | 470 | 156.8 |
| NM EI 65/20C/C | 80 | 65 | 100 | 350 | 190 | 65 | 714 | 12 | 180 | 225 | 649 | 159 | 179 | 125 | 95 | 320 | 250 | 35 | 14 | 472 | 168.5 |
| NM EI 80/16E/B | 100 | 80 | 125 | 281 | 154 | 65 | 584 | 12 | 180 | 225 | 546 | 152 | 181 | 125 | 95 | 320 | 250 | 37 | 14 | 337 | - |
| NM EI 80/16D/C | 100 | 80 | 125 | 281 | 154 | 65 | 669 | 12 | 180 | 225 | 569 | 152 | 181 | 125 | 95 | 320 | 250 | 35 | 14 | 402 | - |
| NM EI 80/16C/C | 100 | 80 | 125 | 281 | 154 | 65 | 669 | 12 | 180 | 225 | 569 | 152 | 181 | 125 | 95 | 320 | 250 | 35 | 14 | 402 | 124.6 |
| NM EI 80/16B/C | 100 | 80 | 125 | 350 | 190 | 65 | 744 | 12 | 180 | 225 | 649 | 152 | 181 | 125 | 95 | 320 | 250 | 35 | 14 | 477 | 168 |

# NM, NMS

## Dimensions and weights

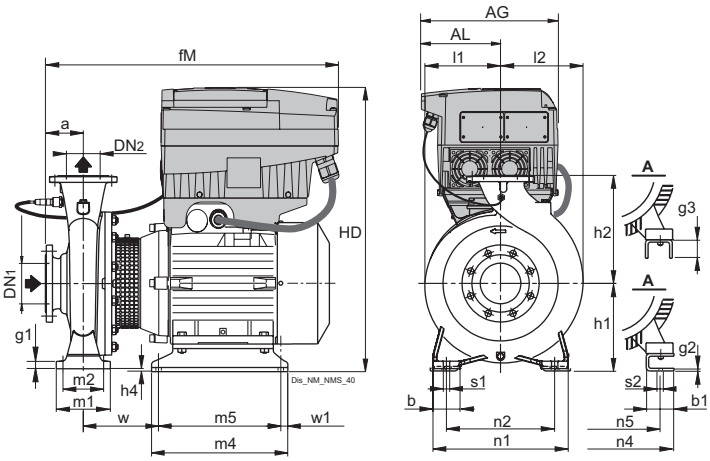


**Flanges EN 1092-2** PN 10-16

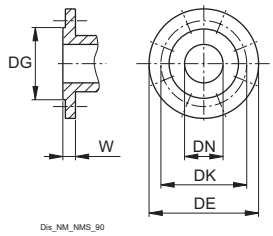


| mm | | | | | | |
|---|---|---|---|---|---|---|
| DN | DG | DK | DE | Holes N° | Holes ø | W |
| 32 | 76 | 100 | 140 | 4 | 19 | 18 |
| 40 | 84 | 110 | 150 | 4 | 19 | 18 |
| 50 | 99 | 125 | 165 | 4 | 19 | 20 |
| 65 | 118 | 145 | 185 | 4 | 19 | 20 |
| 80 | 132 | 160 | 200 | 8 | 19 | 22 |
| 100 | 156 | 180 | 220 | 8 | 19 | 24 |
| 125 | 184 | 210 | 250 | 8 | 19 | 24 |

| TYPE | | | mm | | | | | | | | | | | | | | | | | | | | | | | | | | kg |
|---|---|---|---|---|---|---|---|---|---|---|---|---|---|---|---|---|---|---|---|---|---|---|---|---|---|---|---|---|---|
| | DN1 | DN2 | a | AG | AL | b | b1 | fM | g1 | g3 | h1 | h2 | h4 | HD | l1 | l2 | m1 | m2 | m4 | m5 | n1 | n2 | n4 | n5 | s1 | s2 | w | w1 | Weight |
| **NM EI 50/25A/D** | 65 | 50 | 100 | 350 | 190 | 65 | 80 | 765 | 15 | 20 | 180 | 225 | - | 674 | 177 | 177 | 125 | 95 | 394 | 354 | 320 | 250 | 334 | 254 | 14 | 15 | 185 | 20 | 205 |
| **NM EI 50/25S** | 65 | 50 | 100 | 350 | 190 | 65 | 80 | 765 | 15 | 20 | 180 | 225 | - | 674 | 177 | 177 | 125 | 95 | 394 | 354 | 320 | 250 | 334 | 254 | 14 | 15 | 185 | 20 | - |
| **NM EI 65/20B/D** | 80 | 65 | 100 | 350 | 190 | 65 | 80 | 765 | 12 | 20 | 180 | 225 | - | 674 | 159 | 179 | 125 | 95 | 394 | 354 | 320 | 250 | 334 | 254 | 14 | 15 | 185 | 20 | 204 |
| **NM EI 65/20A/A** | 80 | 65 | 100 | 350 | 190 | 65 | 80 | 765 | 12 | 20 | 180 | 225 | - | 674 | 159 | 179 | 125 | 95 | 394 | 354 | 320 | 250 | 334 | 254 | 14 | 15 | 185 | 20 | 206.5 |
| **NM EI 65/25C/A** | 80 | 65 | 100 | 350 | 190 | 80 | 90 | 765 | 15 | 42 | 200 | 250 | 2 | 694 | 178 | 195 | 160 | 120 | 400 | 360 | 360 | 280 | 344 | 254 | 18 | 14 | 182 | 20 | 230 |
| **NM EI 80/16A/D** | 100 | 80 | 125 | 350 | 190 | 65 | 80 | 790 | 12 | 20 | 180 | 225 | - | 674 | 152 | 181 | 125 | 95 | 394 | 354 | 320 | 250 | 334 | 254 | 14 | 15 | 185 | 20 | - |
| **NM EI 80/20B/A** | 100 | 80 | 125 | 350 | 190 | 65 | 90 | 790 | 15 | 42 | 180 | 250 | 22 | 674 | 170 | 194 | 125 | 95 | 400 | 360 | 345 | 280 | 344 | 254 | 14 | 14 | 182 | 20 | - |
| **NM EI 80/25E** | 100 | 80 | 125 | 350 | 190 | 80 | 90 | 790 | 20 | 42 | 200 | 280 | 2 | 694 | 191 | 211 | 160 | 120 | 400 | 360 | 400 | 315 | 344 | 254 | 18 | 14 | 182 | 20 | - |
| **NM EI 100/20E/A** | 125 | 100 | 125 | 350 | 190 | 80 | 60 | 790 | 15 | 40 | 200 | 280 | - | 694 | 179 | 211 | 160 | 120 | 394 | 354 | 360 | 280 | 314 | 254 | 18 | 15 | 185 | 20 | 213.5 |
| **NM EI 100/20D** | 125 | 100 | 125 | 350 | 190 | 80 | 60 | 790 | 15 | 40 | 200 | 280 | - | 694 | 179 | 211 | 160 | 120 | 394 | 354 | 360 | 280 | 314 | 254 | 18 | 15 | 185 | 20 | - |

# NM, NMS

## Dimensions and weights

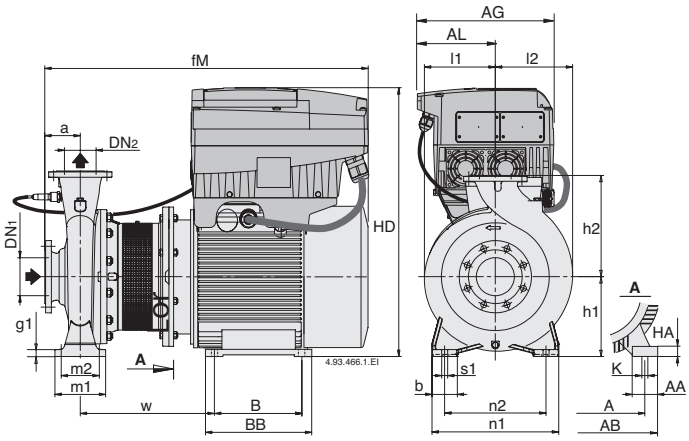


**Flanges EN 1092-2** PN 10-16

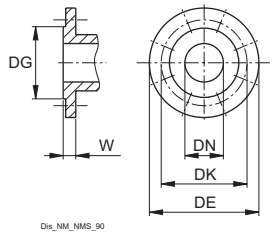


| mm | | | | | | |
|---|---|---|---|---|---|---|
| DN | DG | DK | DE | Holes N° | Holes ø | W |
| 32 | 76 | 100 | 140 | 4 | 19 | 18 |
| 40 | 84 | 110 | 150 | 4 | 19 | 18 |
| 50 | 99 | 125 | 165 | 4 | 19 | 20 |
| 65 | 118 | 145 | 185 | 4 | 19 | 20 |
| 80 | 132 | 160 | 200 | 8 | 19 | 22 |
| 100 | 156 | 180 | 220 | 8 | 19 | 24 |
| 125 | 184 | 210 | 250 | 8 | 19 | 24 |

| TYPE | | | mm | | | | | | | | | | | | | | | | | | | | | | | | kg |
|---|---|---|---|---|---|---|---|---|---|---|---|---|---|---|---|---|---|---|---|---|---|---|---|---|---|---|---|
| | DN1 | DN2 | a | A | AA | AB | AG | AL | b | B | BB | fM | g1 | h1 | h2 | HA | HD | K | l1 | l2 | m1 | m2 | n1 | n2 | s1 | w | Weight |
| **NMS EI 65/250A/B** | 80 | 65 | 100 | 318 | 70 | 390 | 350 | 190 | 80 | 305 | 355 | 1009 | 15 | 200 | 250 | 25 | 783 | 18.5 | 178 | 195 | 160 | 120 | 360 | 280 | 18 | 406 | - |
| **NMS EI 80/200A/A** | 100 | 80 | 125 | 279 | 65 | 339 | 350 | 190 | 65 | 279 | 328 | 986 | 15 | 180 | 250 | 20 | 719 | 14.5 | 170 | 194 | 125 | 95 | 345 | 280 | 14 | 394 | - |
| **NMS EI 80/250C/A** | 100 | 80 | 125 | 318 | 70 | 390 | 350 | 190 | 80 | 305 | 355 | 1034 | 20 | 200 | 280 | 25 | 783 | 18.5 | 191 | 211 | 160 | 120 | 400 | 315 | 18 | 406 | - |
| **NMS EI 100/200B/A** | 125 | 100 | 125 | 318 | 70 | 390 | 350 | 190 | 80 | 305 | 355 | 1034 | 15 | 200 | 280 | 25 | 783 | 18.5 | 179 | 211 | 160 | 120 | 360 | 280 | 18 | 406 | 330.5 |

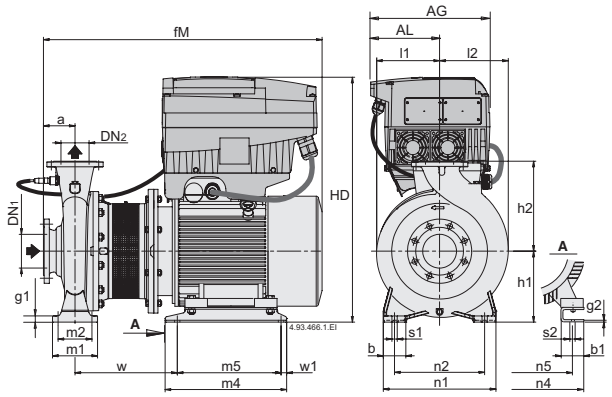


**Flanges EN 1092-2** PN 10-16

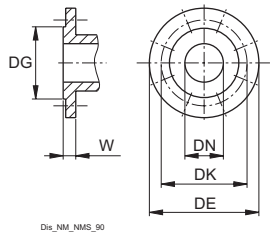


| mm | | | | | | |
|---|---|---|---|---|---|---|
| DN | DG | DK | DE | Holes N° | Holes ø | W |
| 32 | 76 | 100 | 140 | 4 | 19 | 18 |
| 40 | 84 | 110 | 150 | 4 | 19 | 18 |
| 50 | 99 | 125 | 165 | 4 | 19 | 20 |
| 65 | 118 | 145 | 185 | 4 | 19 | 20 |
| 80 | 132 | 160 | 200 | 8 | 19 | 22 |
| 100 | 156 | 180 | 220 | 8 | 19 | 24 |
| 125 | 184 | 210 | 250 | 8 | 19 | 24 |

| TYPE | | | mm | | | | | | | | | | | | | | | | | | | | | | | | kg |
|---|---|---|---|---|---|---|---|---|---|---|---|---|---|---|---|---|---|---|---|---|---|---|---|---|---|---|---|
| | DN1 | DN2 | a | AG | AL | b | b1 | fM | g1 | g2 | h1 | h2 | HD | l1 | l2 | m1 | m2 | m4 | m5 | n1 | n2 | n4 | n5 | s1 | s2 | w | w1 | Weight |
| **NMS EI 65/250B/A** | 80 | 65 | 100 | 350 | 190 | 80 | 70 | 961 | 15 | 20 | 200 | 250 | 739 | 178 | 195 | 160 | 120 | 440 | 400 | 360 | 280 | 349 | 279 | 18 | 14.5 | 394 | 20 | - |
| **NMS EI 80/250D** | 100 | 80 | 125 | 350 | 190 | 80 | 70 | 986 | 20 | 20 | 200 | 280 | 739 | 191 | 211 | 160 | 120 | 440 | 400 | 400 | 315 | 349 | 279 | 18 | 14.5 | 394 | 20 | 283.5 |
| **NMS EI 100/200C** | 125 | 100 | 125 | 350 | 190 | 80 | 70 | 986 | 15 | 20 | 200 | 280 | 739 | 179 | 211 | 160 | 120 | 440 | 400 | 360 | 280 | 349 | 279 | 18 | 14.5 | 394 | 20 | - |

# NM, NMS

## Dimensions and weights

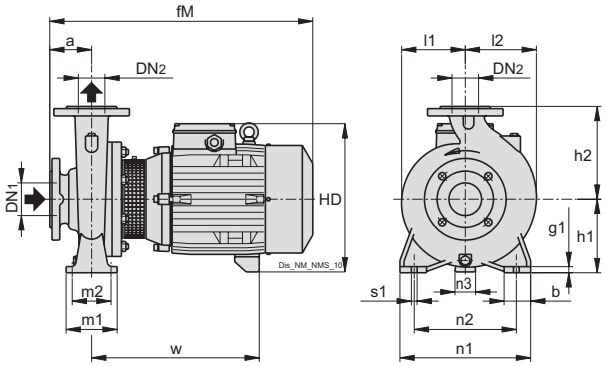


**Flanges EN 1092-2** PN 10-16

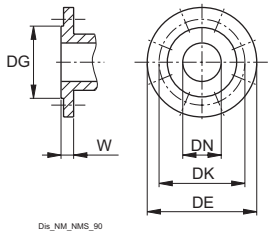


| mm | | | | | | |
|---|---|---|---|---|---|---|
| DN | DG | DK | DE | Holes N° | Holes ø | W |
| 32 | 76 | 100 | 140 | 4 | 19 | 18 |
| 40 | 84 | 110 | 150 | 4 | 19 | 18 |
| 50 | 99 | 125 | 165 | 4 | 19 | 20 |
| 65 | 118 | 145 | 185 | 4 | 19 | 20 |
| 80 | 132 | 160 | 200 | 8 | 19 | 22 |
| 100 | 156 | 180 | 220 | 8 | 19 | 24 |
| 125 | 184 | 210 | 250 | 8 | 19 | 24 |

| TYPE | | | mm | | | | | | | | | | | | | | | | kg |
|---|---|---|---|---|---|---|---|---|---|---|---|---|---|---|---|---|---|---|---|
| | DN1 | DN2 | a | b | fM | g1 | h1 | h2 | HD | l1 | l2 | m1 | m2 | n1 | n2 | n3 | s1 | w | Weight |
| **BNM 32/12F** | 50 | 32 | 80 | 50 | 408 | 12 | 112 | 140 | 242 | 93 | 98 | 100 | 70 | 190 | 140 | 31 | 14 | 248 | 25.9 |
| **BNM 32/12D** | 50 | 32 | 80 | 50 | 408 | 12 | 112 | 140 | 242 | 93 | 98 | 100 | 70 | 190 | 140 | 31 | 14 | 248 | 26.1 |
| **BNM 32/12A/A** | 50 | 32 | 80 | 50 | 408 | 12 | 112 | 140 | 242 | 93 | 98 | 100 | 70 | 190 | 140 | 31 | 14 | 248 | 28.2 |
| **BNM 32/12S/A** | 50 | 32 | 80 | 50 | 408 | 12 | 112 | 140 | 242 | 93 | 98 | 100 | 70 | 190 | 140 | 31 | 14 | 248 | 29.2 |
| **BNM 32/16B/A** | 50 | 32 | 80 | 50 | 413 | 12 | 132 | 160 | 262 | 119 | 119 | 100 | 70 | 240 | 190 | 35 | 14 | 255 | 39.2 |
| **BNM 32/16A/B** | 50 | 32 | 80 | 50 | 453 | 12 | 132 | 160 | 262 | 119 | 119 | 100 | 70 | 240 | 190 | 35 | 14 | 295 | 41.6 |
| **BNM 32/20D/B** | 50 | 32 | 80 | 50 | 453 | 12 | 160 | 180 | 290 | 140 | 140 | 100 | 70 | 240 | 190 | 40 | 14 | 297 | 44.7 |
| **BNM 32/20C/A** | 50 | 32 | 80 | 50 | 479 | 12 | 160 | 180 | 300 | 140 | 140 | 100 | 70 | 240 | 190 | 37 | 14 | 297 | 56.5 |
| **BNM 32/20A/B** | 50 | 32 | 80 | 50 | 479 | 12 | 160 | 180 | 300 | 140 | 140 | 100 | 70 | 240 | 190 | 37 | 14 | 297 | 56.5 |
| **BNM 32L/20C** | 50 | 32 | 80 | 50 | 479 | 12 | 160 | 180 | 300 | 142 | 142 | 100 | 70 | 240 | 190 | 37 | 14 | 297 | - |
| **BNM 32L/200B** | 50 | 32 | 80 | 50 | 594 | 12 | 160 | 180 | 327 | 142 | 142 | 100 | 70 | 240 | 190 | 34 | 14 | 390 | - |
| **BNM 32L/200A** | 50 | 32 | 80 | 50 | 594 | 12 | 160 | 180 | 327 | 142 | 142 | 100 | 70 | 240 | 190 | 34 | 14 | 390 | 76.6 |
| **BNM 32L/16C** | 50 | 32 | 80 | 50 | 453 | 10 | 132 | 160 | 262 | 121 | 121 | 100 | 70 | 240 | 190 | 35 | 14 | 295 | 39.2 |
| **BNM 32L/16B** | 50 | 32 | 80 | 50 | 479 | 10 | 132 | 160 | 272 | 121 | 121 | 100 | 70 | 240 | 190 | 32 | 14 | 294 | 46.2 |
| **BNM 32L/16A** | 50 | 32 | 80 | 50 | 479 | 10 | 132 | 160 | 272 | 121 | 121 | 100 | 70 | 240 | 190 | 32 | 14 | 294 | 49.7 |
| **BNM 40/12F/A** | 65 | 40 | 80 | 50 | 413 | 12 | 112 | 140 | 242 | 100 | 112 | 100 | 70 | 210 | 160 | 31 | 14 | 253 | 31.2 |
| **BNM 40/12C/A** | 65 | 40 | 80 | 50 | 413 | 12 | 112 | 140 | 242 | 100 | 112 | 100 | 70 | 210 | 160 | 31 | 14 | 253 | 32.5 |
| **BNM 40/12A/B** | 65 | 40 | 80 | 50 | 453 | 12 | 112 | 140 | 242 | 100 | 112 | 100 | 70 | 210 | 160 | 31 | 14 | 293 | 32.6 |
| **BNM 40/16C/B** | 65 | 40 | 80 | 50 | 453 | 10 | 132 | 160 | 262 | 120 | 122 | 100 | 70 | 240 | 190 | 35 | 14 | 295 | 43 |
| **BNM 40/16B/A** | 65 | 40 | 80 | 50 | 479 | 10 | 132 | 160 | 272 | 120 | 122 | 100 | 70 | 240 | 190 | 32 | 14 | 294 | 50.2 |
| **BNM 40/16A/B** | 65 | 40 | 80 | 50 | 479 | 10 | 132 | 160 | 272 | 120 | 122 | 100 | 70 | 240 | 190 | 32 | 14 | 294 | 53.4 |
| **BNM 40/20D/B** | 65 | 40 | 100 | 50 | 499 | 12 | 160 | 180 | 300 | 141 | 141 | 100 | 70 | 265 | 212 | 37 | 14 | 297 | 59.6 |
| **BNM 40/20C/B** | 65 | 40 | 100 | 50 | 499 | 12 | 160 | 180 | 300 | 141 | 141 | 100 | 70 | 265 | 212 | 37 | 14 | 297 | 60.2 |
| **BNM 40/200B/A** | 65 | 40 | 100 | 50 | 614 | 12 | 160 | 180 | 327 | 141 | 141 | 100 | 70 | 265 | 212 | 34 | 14 | 390 | 75.6 |
| **BNM 40/200AR/A** | 65 | 40 | 100 | 50 | 614 | 12 | 160 | 180 | 327 | 141 | 141 | 100 | 70 | 265 | 212 | 34 | 14 | 390 | - |
| **BNM 40/200A/A** | 65 | 40 | 100 | 50 | 614 | 12 | 160 | 180 | 327 | 141 | 141 | 100 | 70 | 265 | 212 | 34 | 14 | 390 | 80.6 |
| **BNM 50/12F/B** | 65 | 50 | 100 | 50 | 473 | 10 | 132 | 160 | 262 | 122 | 137 | 100 | 70 | 240 | 190 | 35 | 14 | 295 | 42.9 |
| **BNM 50/12D/A** | 65 | 50 | 100 | 50 | 499 | 10 | 132 | 160 | 272 | 122 | 137 | 100 | 70 | 240 | 190 | 32 | 14 | 294 | 50.6 |
| **BNM 50/12A/B** | 65 | 50 | 100 | 50 | 499 | 10 | 132 | 160 | 272 | 122 | 137 | 100 | 70 | 240 | 190 | 32 | 14 | 294 | 53.3 |
| **BNM 50/12S/B** | 65 | 50 | 100 | 50 | 499 | 10 | 132 | 160 | 272 | 122 | 137 | 100 | 70 | 240 | 190 | 32 | 14 | 294 | 53.8 |
| **BNM 50/160B/B** | 65 | 50 | 100 | 50 | 614 | 12 | 160 | 180 | 327 | 125 | 140 | 100 | 70 | 265 | 212 | 34 | 14 | 390 | 73.7 |
| **BNM 50/160A/B** | 65 | 50 | 100 | 50 | 614 | 12 | 160 | 180 | 327 | 125 | 140 | 100 | 70 | 265 | 212 | 34 | 14 | 390 | 79.6 |
| **BNM 65/12E/A** | 80 | 65 | 100 | 65 | 504 | 12 | 160 | 180 | 300 | 130 | 154 | 125 | 95 | 280 | 212 | 37 | 14 | 302 | 57.6 |
| **BNM 65/125C/B** | 80 | 65 | 100 | 65 | 619 | 12 | 160 | 180 | 327 | 130 | 154 | 125 | 95 | 280 | 212 | 34 | 14 | 395 | 74.9 |
| **BNM 65/125A/B** | 80 | 65 | 100 | 65 | 619 | 12 | 160 | 180 | 327 | 130 | 154 | 125 | 95 | 280 | 212 | 34 | 14 | 395 | 80.3 |
| **BNM 65/160D/B** | 80 | 65 | 100 | 65 | 614 | 12 | 160 | 200 | 327 | 140 | 161 | 125 | 95 | 280 | 212 | 34 | 14 | 390 | 81.6 |
| **BNM 65/160C/C** | 80 | 65 | 100 | 65 | 659 | 12 | 160 | 200 | 350 | 140 | 161 | 125 | 95 | 280 | 212 | 31 | 14 | 415 | 102 |
| **BNM 80/160E/B** | 100 | 80 | 125 | 65 | 639 | 12 | 180 | 225 | 347 | 152 | 181 | 125 | 95 | 320 | 250 | 37 | 14 | 392 | - |
| **BNM 80/160D/C** | 100 | 80 | 125 | 65 | 684 | 12 | 180 | 225 | 370 | 152 | 181 | 125 | 95 | 320 | 250 | 35 | 14 | 417 | 109.2 |

| TYPE | | | mm | | | | | | | | | | | | | | | | kg |
|---|---|---|---|---|---|---|---|---|---|---|---|---|---|---|---|---|---|---|---|
| | DN1 | DN2 | a | b | fM | g1 | h1 | h2 | HD | l1 | l2 | m1 | m2 | n1 | n2 | n3 | s1 | w | Weight |
| **BNMM 32/12S** | 50 | 32 | 80 | 50 | 408 | 12 | 112 | 140 | 242 | 93 | 98 | 100 | 70 | 190 | 140 | 31 | 14 | 248 | - |
| **BNMM 32/12F** | 50 | 32 | 80 | 50 | 408 | 12 | 112 | 140 | 242 | 93 | 98 | 100 | 70 | 190 | 140 | 31 | 14 | 248 | 26.8 |
| **BNMM 32/12D** | 50 | 32 | 80 | 50 | 408 | 12 | 112 | 140 | 242 | 93 | 98 | 100 | 70 | 190 | 140 | 31 | 14 | 248 | - |
| **BNMM 32/12A** | 50 | 32 | 80 | 50 | 408 | 12 | 112 | 140 | 242 | 93 | 98 | 100 | 70 | 190 | 140 | 31 | 14 | 248 | 29.6 |

Version without coupling guard
BNM 40/200A/A-AR/A-B/A
BNM 50/160A/B-B/B
BNM 65/125A/B-C/B
BNM 65/160 D/B-C/C
BNM 80/160E/B-D/C

# NM, NMS

## Dimensions and weights

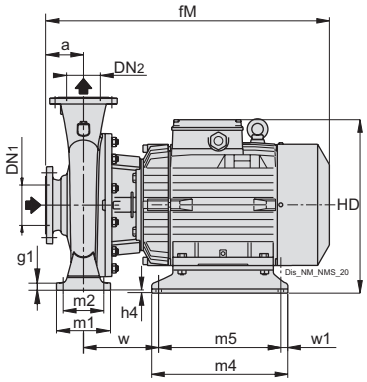


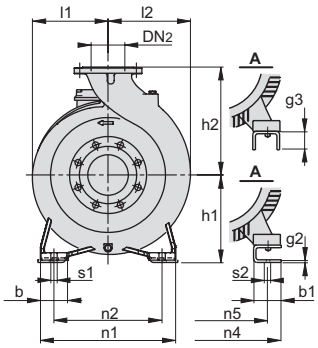


**Flanges EN 1092-2** PN 10-16

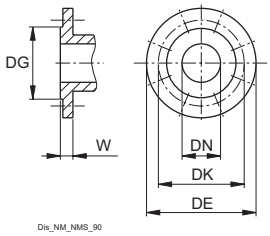


| mm | | | | | | |
|---|---|---|---|---|---|---|
| DN | DG | DK | DE | Holes N° | Holes ø | W |
| 32 | 76 | 100 | 140 | 4 | 19 | 18 |
| 40 | 84 | 110 | 150 | 4 | 19 | 18 |
| 50 | 99 | 125 | 165 | 4 | 19 | 20 |
| 65 | 118 | 145 | 185 | 4 | 19 | 20 |
| 80 | 132 | 160 | 200 | 8 | 19 | 22 |
| 100 | 156 | 180 | 220 | 8 | 19 | 24 |
| 125 | 184 | 210 | 250 | 8 | 19 | 24 |

| TYPE | | | mm | | | | | | | | | | | | | | | | | | | | | | | | | kg |
|---|---|---|---|---|---|---|---|---|---|---|---|---|---|---|---|---|---|---|---|---|---|---|---|---|---|---|---|---|
| | DN1 | DN2 | a | b | b1 | fM | g1 | g2 | g3 | h1 | h2 | h4 | HD | l1 | l2 | m1 | m2 | m4 | m5 | n1 | n2 | n4 | n5 | s1 | s2 | w | w1 | Weight |
| **BNM 4025/C/C** | 65 | 40 | 100 | 65 | 69 | 634 | 15 | 6 | - | 180 | 225 | 12 | 370 | 177 | 177 | 125 | 95 | 298 | 258 | 320 | 250 | 266 | 216 | 14 | 12 | 174 | 20 | - |
| **BNM 4025/B/C** | 65 | 40 | 100 | 65 | 69 | 634 | 15 | 6 | - | 180 | 225 | 12 | 370 | 177 | 177 | 125 | 95 | 298 | 258 | 320 | 250 | 266 | 216 | 14 | 12 | 174 | 20 | 129 |
| **BNM 4025/A/C** | 65 | 40 | 100 | 65 | 69 | 709 | 15 | 6 | - | 180 | 225 | 12 | 370 | 177 | 177 | 125 | 95 | 298 | 258 | 320 | 250 | 266 | 216 | 14 | 12 | 174 | 20 | - |
| **BNM 50/200B/C** | 65 | 50 | 100 | 50 | 69 | 694 | 14 | 6 | - | 160 | 200 | 32 | 350 | 142 | 152 | 100 | 70 | 298 | 258 | 265 | 212 | 266 | 216 | 14 | 12 | 234 | 20 | 124.9 |
| **BNM 50/200A/C** | 65 | 50 | 100 | 50 | 69 | 694 | 14 | 6 | - | 160 | 200 | 32 | 350 | 142 | 152 | 100 | 70 | 298 | 258 | 265 | 212 | 266 | 216 | 14 | 12 | 234 | 20 | 132.8 |
| **BNM 50/200S/C** | 65 | 50 | 100 | 50 | 69 | 769 | 14 | 6 | - | 160 | 200 | 32 | 350 | 142 | 152 | 100 | 70 | 298 | 258 | 265 | 212 | 266 | 216 | 14 | 12 | 234 | 20 | 151.3 |
| **BNM 5025/C/C** | 65 | 50 | 100 | 65 | 69 | 634 | 15 | 6 | - | 180 | 225 | 12 | 370 | 177 | 177 | 125 | 95 | 298 | 258 | 320 | 250 | 266 | 216 | 14 | 12 | 174 | 20 | 133.9 |
| **BNM 5025/B/C** | 65 | 50 | 100 | 65 | 69 | 709 | 15 | 6 | - | 180 | 225 | 12 | 370 | 177 | 177 | 125 | 95 | 298 | 258 | 320 | 250 | 266 | 216 | 14 | 12 | 174 | 20 | - |
| **BNM 50/25A** | 65 | 50 | 100 | 65 | 80 | 765 | 15 | - | 20 | 180 | 225 | - | 388 | 177 | 177 | 125 | 95 | 394 | 354 | 320 | 250 | 334 | 254 | 14 | 15 | 185 | 20 | - |
| **BNM 50/25S** | 65 | 50 | 100 | 65 | 80 | 765 | 15 | - | 20 | 180 | 225 | - | 388 | 177 | 177 | 125 | 95 | 394 | 354 | 320 | 250 | 334 | 254 | 14 | 15 | 185 | 20 | 189.8 |
| **BNM 65/160B/C** | 80 | 65 | 100 | 65 | 69 | 694 | 12 | 6 | - | 160 | 200 | 32 | 350 | 140 | 161 | 125 | 95 | 298 | 258 | 280 | 212 | 266 | 216 | 14 | 12 | 234 | 20 | 129.2 |
| **BNM 65/160AR** | 80 | 65 | 100 | 65 | 69 | 769 | 12 | 6 | - | 160 | 200 | 32 | 350 | 140 | 161 | 125 | 95 | 298 | 258 | 280 | 212 | 266 | 216 | 14 | 12 | 234 | 20 | - |
| **BNM 65/160A/C** | 80 | 65 | 100 | 65 | 69 | 769 | 12 | 6 | - | 160 | 200 | 32 | 350 | 140 | 161 | 125 | 95 | 298 | 258 | 280 | 212 | 266 | 216 | 14 | 12 | 234 | 20 | - |
| **BNM 65/200C/C** | 80 | 65 | 100 | 65 | 69 | 774 | 12 | 6 | - | 180 | 225 | 12 | 370 | 159 | 179 | 125 | 95 | 298 | 258 | 320 | 250 | 266 | 216 | 14 | 12 | 239 | 20 | 156.6 |
| **BNM 65/250C/B** | 80 | 65 | 100 | 80 | 90 | 828 | 15 | - | 42 | 200 | 250 | 2 | 408 | 178 | 195 | 160 | 120 | 400 | 360 | 360 | 280 | 344 | 254 | 18 | 14 | 245 | 20 | - |
| **BNM 80/160C/C** | 100 | 80 | 125 | 65 | 69 | 724 | 12 | 6 | - | 180 | 225 | 12 | 370 | 152 | 181 | 125 | 95 | 298 | 258 | 320 | 250 | 266 | 216 | 14 | 12 | 239 | 20 | 138.6 |
| **BNM 80/160B/C** | 100 | 80 | 125 | 65 | 69 | 799 | 12 | 6 | - | 180 | 225 | 12 | 370 | 152 | 181 | 125 | 95 | 298 | 258 | 320 | 250 | 266 | 216 | 14 | 12 | 239 | 20 | 157.4 |
| **BNM 80/16A** | 100 | 80 | 125 | 65 | 80 | 790 | 12 | - | 20 | 180 | 225 | - | 388 | 152 | 181 | 125 | 95 | 394 | 354 | 320 | 250 | 334 | 254 | 14 | 15 | 185 | 20 | 169 |

# NM, NMS

## Dimensions and weights with IE3 motor

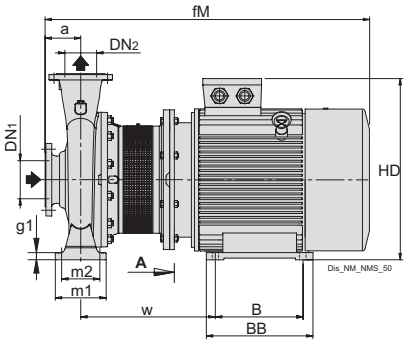


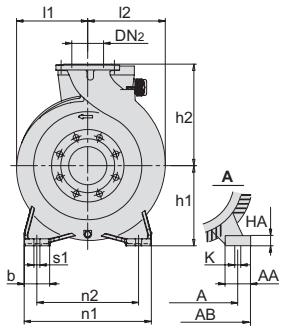


**Flanges EN 1092-2** PN 10-16

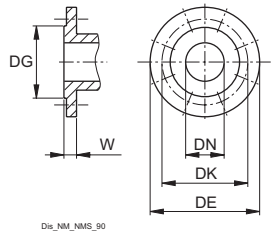


| mm | | | | | | |
|---|---|---|---|---|---|---|
| DN | DG | DK | DE | Holes N° | Holes ø | W |
| 32 | 76 | 100 | 140 | 4 | 19 | 18 |
| 40 | 84 | 110 | 150 | 4 | 19 | 18 |
| 50 | 99 | 125 | 165 | 4 | 19 | 20 |
| 65 | 118 | 145 | 185 | 4 | 19 | 20 |
| 80 | 132 | 160 | 200 | 8 | 19 | 22 |
| 100 | 156 | 180 | 220 | 8 | 19 | 24 |
| 125 | 184 | 210 | 250 | 8 | 19 | 24 |

| TYPE | | | mm | | | | | | | | | | | | | | | | | | | | | |
|---|---|---|---|---|---|---|---|---|---|---|---|---|---|---|---|---|---|---|---|---|---|---|---|---|
| | DN1 | DN2 | a | A | AA | AB | b | B | BB | fM | g1 | h1 | h2 | HA | HD | K | l1 | l2 | m1 | m2 | n1 | n2 | s1 | w |
| **BNMS 65/200A** | 80 | 65 | 100 | 279 | 70 | 350 | 65 | 241 | 312 | 955 | 12 | 180 | 225 | 22 | 450 | 15 | 159 | 179 | 125 | 95 | 320 | 250 | 14 | 394 |
| **BNMS 65/250A/B** | 80 | 65 | 100 | 318 | 70 | 390 | 80 | 305 | 370 | 1006 | 15 | 200 | 250 | 25 | 500 | 19 | 178 | 195 | 160 | 120 | 360 | 280 | 18 | 406 |
| **BNMS 65/250B/B** | 80 | 65 | 100 | 318 | 70 | 390 | 80 | 305 | 370 | 1006 | 15 | 200 | 250 | 25 | 500 | 19 | 178 | 195 | 160 | 120 | 360 | 280 | 18 | 406 |
| **BNMS 80/200B/B** | 100 | 80 | 125 | 279 | 70 | 350 | 65 | 241 | 312 | 980 | 15 | 180 | 250 | 22 | 450 | 15 | 170 | 194 | 125 | 95 | 345 | 280 | 14 | 394 |
| **BNMS 80/250C/A** | 100 | 80 | 125 | 318 | 70 | 390 | 80 | 305 | 370 | 1031 | 20 | 200 | 280 | 25 | 500 | 19 | 191 | 211 | 160 | 120 | 400 | 315 | 18 | 406 |
| **BNMS 80/250D/A** | 100 | 80 | 125 | 318 | 70 | 390 | 80 | 305 | 370 | 1031 | 20 | 200 | 280 | 25 | 500 | 19 | 191 | 211 | 160 | 120 | 400 | 315 | 18 | 406 |
| **BNMS 100/200B/A** | 125 | 100 | 125 | 318 | 70 | 390 | 80 | 305 | 370 | 1031 | 15 | 200 | 280 | 25 | 500 | 19 | 179 | 211 | 160 | 120 | 360 | 280 | 18 | 406 |
| **BNMS 100/200C/A** | 125 | 100 | 125 | 318 | 70 | 390 | 80 | 305 | 370 | 1031 | 15 | 200 | 280 | 25 | 500 | 19 | 179 | 211 | 160 | 120 | 360 | 280 | 18 | 406 |

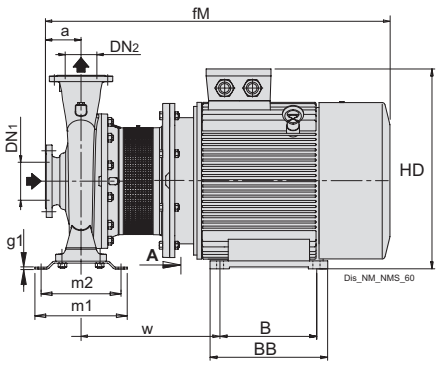


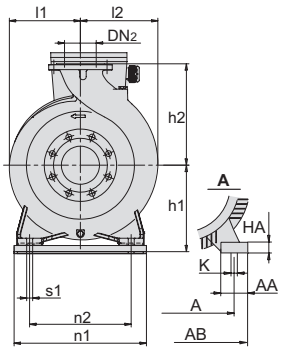


**Flanges EN 1092-2** PN 10-16

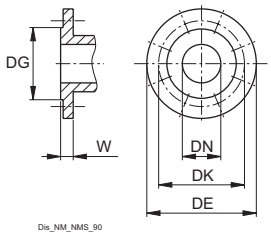


| mm | | | | | | |
|---|---|---|---|---|---|---|
| DN | DG | DK | DE | Holes N° | Holes ø | W |
| 32 | 76 | 100 | 140 | 4 | 19 | 18 |
| 40 | 84 | 110 | 150 | 4 | 19 | 18 |
| 50 | 99 | 125 | 165 | 4 | 19 | 20 |
| 65 | 118 | 145 | 185 | 4 | 19 | 20 |
| 80 | 132 | 160 | 200 | 8 | 19 | 22 |
| 100 | 156 | 180 | 220 | 8 | 19 | 24 |
| 125 | 184 | 210 | 250 | 8 | 19 | 24 |

| TYPE | | | mm | | | | | | | | | | | | | | | | | | | | | |
|---|---|---|---|---|---|---|---|---|---|---|---|---|---|---|---|---|---|---|---|---|---|---|---|---|
| | DN1 | DN2 | a | A | AA | AB | B | BB | fM | g1 | h1 | h2 | HA | HD | K | l1 | l2 | m1 | m2 | n1 | n2 | s1 | w |
| **BNMS 80/200A/B** | 100 | 80 | 125 | 318 | 70 | 390 | 305 | 370 | 1031 | 6 | 200 | 250 | 25 | 500 | 19 | 170 | 194 | 227 | 191 | 350 | 280 | 14 | 406 |
| **BNMS 80/250B/A** | 100 | 80 | 125 | 356 | 75 | 431 | 311 | 395 | 1089 | 6 | 225 | 280 | 28 | 555 | 19 | 191 | 211 | 298 | 258 | 410 | 315 | 18 | 445 |
| **BNMS 100/200A/A** | 125 | 100 | 125 | 356 | 75 | 431 | 311 | 395 | 1089 | 6 | 225 | 280 | 28 | 555 | 19 | 179 | 211 | 298 | 258 | 410 | 315 | 18 | 445 |
| **BNMS 100/250A/A** | 125 | 100 | 140 | 457 | 85 | 545 | 368 | 485 | 1276 | 6 | 280 | 280 | 38 | 670 | 24 | 205 | 233 | 260 | 220 | 410 | 315 | 18 | 516 |

# NM, NMS

## Dimensions and weights with IE3 motor

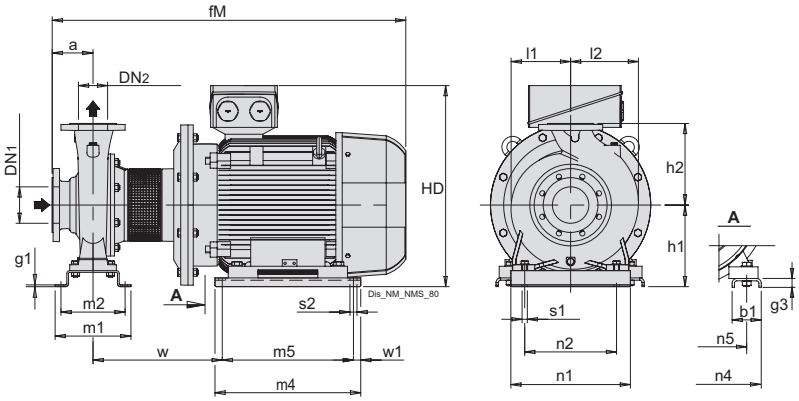


**Flanges EN 1092-2** PN 10-16

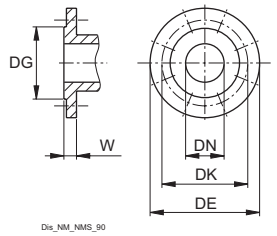


| mm | | | | | | |
|---|---|---|---|---|---|---|
| DN | DG | DK | DE | Holes N° | Holes ø | W |
| 32 | 76 | 100 | 140 | 4 | 19 | 18 |
| 40 | 84 | 110 | 150 | 4 | 19 | 18 |
| 50 | 99 | 125 | 165 | 4 | 19 | 20 |
| 65 | 118 | 145 | 185 | 4 | 19 | 20 |
| 80 | 132 | 160 | 200 | 8 | 19 | 22 |
| 100 | 156 | 180 | 220 | 8 | 19 | 24 |
| 125 | 184 | 210 | 250 | 8 | 19 | 24 |

| TYPE | | | mm | | | | | | | | | | | | | | | | | | | | | kg |
|---|---|---|---|---|---|---|---|---|---|---|---|---|---|---|---|---|---|---|---|---|---|---|---|---|
| | DN1 | DN2 | a | fM | g1 | g3 | h1 | h2 | HD | l1 | l2 | m1 | m2 | m4 | m5 | n1 | n2 | n4 | n5 | s1 | s2 | w | w1 | Weight |
| **BNMS 80/250A/A** | 100 | 80 | 125 | 1321 | 6 | 30 | 280 | 280 | 642 | 191 | 211 | 260 | 220 | 570 | 520 | 410 | 315 | 506 | 406 | 18 | 24 | 408 | 25 | 524 |
| **BNMS 100/250B/A** | 125 | 100 | 140 | 1336 | 6 | 30 | 280 | 280 | 642 | 205 | 233 | 260 | 220 | 570 | 520 | 410 | 315 | 506 | 406 | 18 | 24 | 408 | 25 | - |

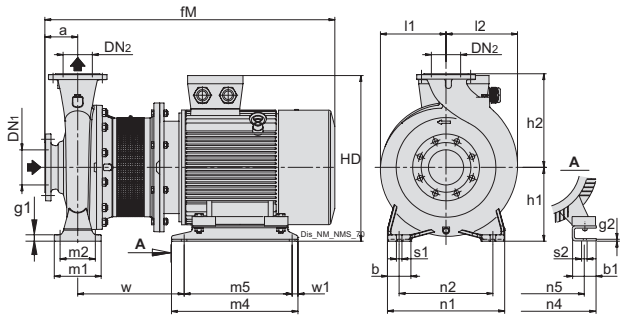


**Flanges EN 1092-2** PN 10-16

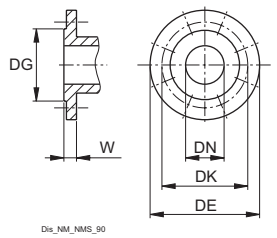


| mm | | | | | | |
|---|---|---|---|---|---|---|
| DN | DG | DK | DE | Holes N° | Holes ø | W |
| 32 | 76 | 100 | 140 | 4 | 19 | 18 |
| 40 | 84 | 110 | 150 | 4 | 19 | 18 |
| 50 | 99 | 125 | 165 | 4 | 19 | 20 |
| 65 | 118 | 145 | 185 | 4 | 19 | 20 |
| 80 | 132 | 160 | 200 | 8 | 19 | 22 |
| 100 | 156 | 180 | 220 | 8 | 19 | 24 |
| 125 | 184 | 210 | 250 | 8 | 19 | 24 |

| TYPE | | | mm | | | | | | | | | | | | | | | | | | | | | | |
|---|---|---|---|---|---|---|---|---|---|---|---|---|---|---|---|---|---|---|---|---|---|---|---|---|---|
| | DN1 | DN2 | a | b | b1 | fM | g1 | g3 | h1 | h2 | HD | l1 | l2 | m1 | m2 | m4 | m5 | n1 | n2 | n4 | n5 | s1 | s2 | w | w1 |
| **BNMS 65/250C** | 80 | 65 | 100 | 80 | 70 | 955 | 15 | 20 | 200 | 250 | 470 | 178 | 195 | 160 | 120 | 440 | 400 | 360 | 280 | 349 | 279 | 18 | 15 | 333 | 20 |
| **BNMS 80/250E** | 100 | 80 | 125 | 80 | 70 | 980 | 20 | 20 | 200 | 280 | 470 | 191 | 211 | 160 | 120 | 440 | 400 | 400 | 315 | 349 | 279 | 18 | 15 | 333 | 20 |
| **BNMS 100/200D/A** | 125 | 100 | 125 | 80 | 70 | 980 | 15 | 20 | 200 | 280 | 470 | 179 | 211 | 160 | 120 | 440 | 400 | 360 | 280 | 349 | 279 | 18 | 15 | 333 | 20 |

# NM, NMS

## Dimensions and weights with IE4 motor

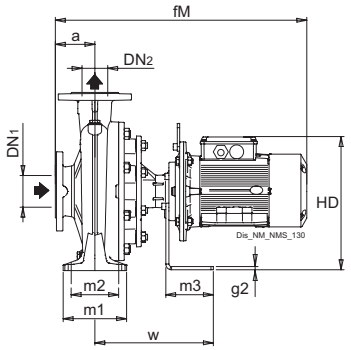


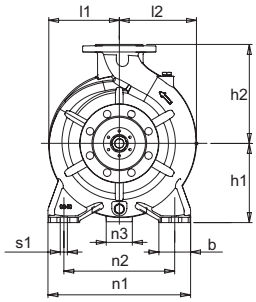


**Flanges EN 1092-2** PN 10-16

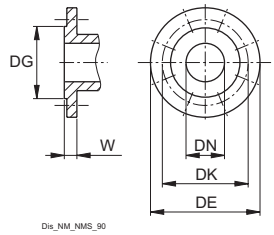


| mm | | | | | | |
|---|---|---|---|---|---|---|
| DN | DG | DK | DE | Holes N° | Holes ø | W |
| 32 | 76 | 100 | 140 | 4 | 19 | 18 |
| 40 | 84 | 110 | 150 | 4 | 19 | 18 |
| 50 | 99 | 125 | 165 | 4 | 19 | 20 |
| 65 | 118 | 145 | 185 | 4 | 19 | 20 |
| 80 | 132 | 160 | 200 | 8 | 19 | 22 |
| 100 | 156 | 180 | 220 | 8 | 19 | 24 |
| 125 | 184 | 210 | 250 | 8 | 19 | 24 |

| TYPE | | | mm | | | | | | | | | | | | | | | | | |
|---|---|---|---|---|---|---|---|---|---|---|---|---|---|---|---|---|---|---|---|---|
| | DN1 | DN2 | a | b | fM | g1 | g2 | h1 | h2 | HD | l1 | l2 | m1 | m2 | m3 | n1 | n2 | n3 | s1 | w |
| BNMS 32/125D | 50 | 32 | 80 | 50 | 536 | 12 | 8 | 112 | 140 | 241 | 93 | 98 | 100 | 70 | 120 | 190 | 140 | 65 | 14 | 274 |
| BNMS 32/125D-S | 50 | 32 | 80 | 50 | 536 | 12 | 8 | 112 | 140 | 241 | 93 | 98 | 100 | 70 | 120 | 190 | 140 | 65 | 14 | 274 |
| BNMS 32/125A | 50 | 32 | 80 | 50 | 536 | 12 | 8 | 112 | 140 | 241 | 93 | 98 | 100 | 70 | 120 | 190 | 140 | 65 | 14 | 274 |
| BNMS 32/125S | 50 | 32 | 80 | 50 | 576 | 12 | 8 | 112 | 140 | 241 | 93 | 98 | 100 | 70 | 120 | 190 | 140 | 65 | 14 | 274 |
| BNMS 32/125A-S | 50 | 32 | 80 | 50 | 576 | 12 | 8 | 112 | 140 | 241 | 93 | 98 | 100 | 70 | 120 | 190 | 140 | 65 | 14 | 274 |
| BNMS 32/160B | 50 | 32 | 80 | 50 | 576 | 12 | 8 | 132 | 160 | 261 | 119 | 119 | 100 | 70 | 120 | 240 | 190 | 65 | 14 | 274 |
| BNMS 32/160B-S | 50 | 32 | 80 | 50 | 576 | 12 | 8 | 132 | 160 | 261 | 119 | 119 | 100 | 70 | 120 | 240 | 190 | 65 | 14 | 274 |
| BNMS 32/160A | 50 | 32 | 80 | 50 | 576 | 12 | 8 | 132 | 160 | 261 | 119 | 119 | 100 | 70 | 120 | 240 | 190 | 65 | 14 | 274 |
| BNMS 32/160A-S | 50 | 32 | 80 | 50 | 590 | 12 | 8 | 132 | 160 | 270 | 119 | 119 | 100 | 70 | 120 | 240 | 190 | 65 | 14 | 274 |
| BNMS 32/200D | 50 | 32 | 80 | 50 | 576 | 12 | 8 | 160 | 180 | 289 | 140 | 140 | 100 | 70 | 120 | 240 | 190 | 65 | 14 | 274 |
| BNMS 32/200D-S | 50 | 32 | 80 | 50 | 590 | 12 | 8 | 160 | 180 | 298 | 140 | 140 | 100 | 70 | 120 | 240 | 190 | 65 | 14 | 274 |
| BNMS 32/200C | 50 | 32 | 80 | 50 | 590 | 12 | 8 | 160 | 180 | 298 | 140 | 140 | 100 | 70 | 120 | 240 | 190 | 65 | 14 | 274 |
| BNMS 32/200A | 50 | 32 | 80 | 50 | 617 | 12 | 8 | 160 | 180 | 334 | 140 | 140 | 100 | 70 | 120 | 240 | 190 | 65 | 14 | 274 |
| BNMS 32/200A-S | 50 | 32 | 80 | 50 | 646 | 12 | 8 | 160 | 180 | 320 | 140 | 140 | 100 | 70 | 250 | 240 | 190 | 130 | 14 | 407 |
| BNMS 32L/160C | 50 | 32 | 80 | 50 | 576 | 10 | 8 | 132 | 160 | 261 | 121 | 121 | 100 | 70 | 120 | 240 | 190 | 65 | 14 | 274 |
| BNMS 32L/160B | 50 | 32 | 80 | 50 | 590 | 10 | 8 | 132 | 160 | 270 | 121 | 121 | 100 | 70 | 120 | 240 | 190 | 65 | 14 | 274 |
| BNMS 32L/160A | 50 | 32 | 80 | 50 | 617 | 10 | 8 | 132 | 160 | 306 | 121 | 121 | 100 | 70 | 120 | 240 | 190 | 65 | 14 | 274 |
| BNMS 32L/200C | 50 | 32 | 80 | 50 | 617 | 12 | 8 | 160 | 180 | 334 | 142 | 142 | 100 | 70 | 120 | 240 | 190 | 65 | 14 | 274 |
| BNMS 32L/200B | 50 | 32 | 80 | 50 | 646 | 12 | 8 | 160 | 180 | 320 | 142 | 142 | 100 | 70 | 250 | 240 | 190 | 130 | 14 | 407 |
| BNMS 32L/200A | 50 | 32 | 80 | 50 | 763 | 12 | 8 | 160 | 180 | 352 | 142 | 142 | 100 | 70 | 250 | 240 | 190 | 130 | 14 | 407 |
| BNMS 40/125F | 65 | 40 | 80 | 50 | 536 | 12 | 8 | 112 | 140 | 241 | 100 | 112 | 100 | 70 | 120 | 210 | 160 | 65 | 14 | 274 |
| BNMS 40/125C | 65 | 40 | 80 | 50 | 576 | 12 | 8 | 112 | 140 | 241 | 100 | 112 | 100 | 70 | 120 | 210 | 160 | 65 | 14 | 274 |
| BNMS 40/125A | 65 | 40 | 80 | 50 | 576 | 12 | 8 | 112 | 140 | 241 | 100 | 112 | 100 | 70 | 120 | 210 | 160 | 65 | 14 | 274 |
| BNMS 40/160C | 65 | 40 | 80 | 50 | 576 | 10 | 8 | 132 | 160 | 261 | 120 | 122 | 100 | 70 | 120 | 240 | 190 | 65 | 14 | 274 |
| BNMS 40/160B | 65 | 40 | 80 | 50 | 590 | 10 | 8 | 132 | 160 | 270 | 120 | 122 | 100 | 70 | 120 | 240 | 190 | 65 | 14 | 274 |
| BNMS 40/160A | 65 | 40 | 80 | 50 | 617 | 10 | 8 | 132 | 160 | 306 | 120 | 122 | 100 | 70 | 120 | 240 | 190 | 65 | 14 | 274 |
| BNMS 40/200D | 65 | 40 | 100 | 50 | 637 | 12 | 8 | 160 | 180 | 334 | 141 | 141 | 100 | 70 | 120 | 265 | 212 | 65 | 14 | 274 |
| BNMS 40/200C | 65 | 40 | 100 | 50 | 637 | 12 | 8 | 160 | 180 | 334 | 141 | 141 | 100 | 70 | 120 | 265 | 212 | 65 | 14 | 274 |
| BNMS 40/200D-S | 65 | 40 | 100 | 50 | 666 | 12 | 8 | 160 | 180 | 320 | 141 | 141 | 100 | 70 | 250 | 265 | 212 | 130 | 14 | 407 |
| BNMS 40/200C-S | 65 | 40 | 100 | 50 | 666 | 12 | 8 | 160 | 180 | 320 | 141 | 141 | 100 | 70 | 250 | 265 | 212 | 130 | 14 | 407 |
| BNMS 40/200B | 65 | 40 | 100 | 50 | 666 | 12 | 8 | 160 | 180 | 320 | 141 | 141 | 100 | 70 | 250 | 265 | 212 | 130 | 14 | 407 |
| BNMS 40/200AR | 65 | 40 | 100 | 50 | 666 | 12 | 8 | 160 | 180 | 320 | 141 | 141 | 100 | 70 | 250 | 265 | 212 | 130 | 14 | 407 |
| BNMS 40/200B-S | 65 | 40 | 100 | 50 | 783 | 12 | 8 | 160 | 180 | 352 | 141 | 141 | 100 | 70 | 250 | 265 | 212 | 130 | 14 | 407 |
| BNMS 40/200AR-S | 65 | 40 | 100 | 50 | 783 | 12 | 8 | 160 | 180 | 352 | 141 | 141 | 100 | 70 | 250 | 265 | 212 | 130 | 14 | 407 |
| BNMS 40/200A | 65 | 40 | 100 | 50 | 783 | 12 | 8 | 160 | 180 | 352 | 141 | 141 | 100 | 70 | 250 | 265 | 212 | 130 | 14 | 407 |
| BNMS 50/125F | 65 | 50 | 100 | 50 | 596 | 10 | 8 | 132 | 160 | 261 | 122 | 137 | 100 | 70 | 120 | 240 | 190 | 65 | 14 | 274 |
| BNMS 50/125D | 65 | 50 | 100 | 50 | 610 | 10 | 8 | 132 | 160 | 270 | 122 | 137 | 100 | 70 | 120 | 240 | 190 | 65 | 14 | 274 |
| BNMS 50/125A | 65 | 50 | 100 | 50 | 637 | 10 | 8 | 132 | 160 | 306 | 122 | 137 | 100 | 70 | 120 | 240 | 190 | 65 | 14 | 274 |
| BNMS 50/125S | 65 | 50 | 100 | 50 | 637 | 10 | 8 | 132 | 160 | 306 | 122 | 137 | 100 | 70 | 120 | 240 | 190 | 65 | 14 | 274 |
| BNMS 50/160B | 65 | 50 | 100 | 50 | 666 | 12 | 8 | 160 | 180 | 320 | 125 | 140 | 100 | 70 | 250 | 265 | 212 | 130 | 14 | 407 |
| BNMS 50/160A | 65 | 50 | 100 | 50 | 783 | 12 | 8 | 160 | 180 | 352 | 125 | 140 | 100 | 70 | 250 | 265 | 212 | 130 | 14 | 407 |
| BNMS 65/125E | 80 | 65 | 100 | 65 | 637 | 12 | 8 | 160 | 180 | 334 | 130 | 154 | 125 | 95 | 120 | 280 | 212 | 65 | 14 | 274 |
| BNMS 65/125C | 80 | 65 | 100 | 65 | 666 | 12 | 8 | 160 | 180 | 320 | 130 | 154 | 125 | 95 | 250 | 280 | 212 | 130 | 14 | 407 |
| BNMS 65/125A | 80 | 65 | 100 | 65 | 783 | 12 | 8 | 160 | 180 | 352 | 130 | 154 | 125 | 95 | 250 | 280 | 212 | 130 | 14 | 407 |
| BNMS 65/160D | 80 | 65 | 100 | 65 | 783 | 12 | 8 | 160 | 200 | 352 | 140 | 161 | 125 | 95 | 250 | 280 | 212 | 130 | 14 | 407 |
| BNMS 80/160E | 100 | 80 | 125 | 65 | 808 | 12 | 8 | 180 | 225 | 372 | 152 | 181 | 125 | 95 | 250 | 320 | 250 | 130 | 14 | 407 |

# NM, NMS

## Dimensions and weights with IE4 motor

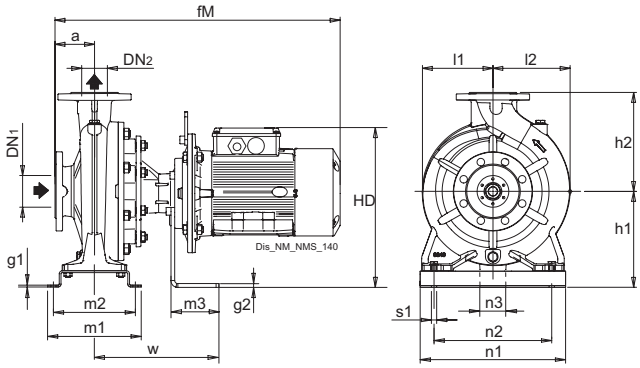


**Flanges EN 1092-2** PN 10-16

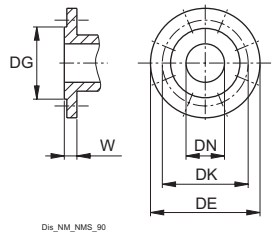


| mm | | | | | | |
|---|---|---|---|---|---|---|
| DN | DG | DK | DE | Holes N° | Holes ø | W |
| 32 | 76 | 100 | 140 | 4 | 19 | 18 |
| 40 | 84 | 110 | 150 | 4 | 19 | 18 |
| 50 | 99 | 125 | 165 | 4 | 19 | 20 |
| 65 | 118 | 145 | 185 | 4 | 19 | 20 |
| 80 | 132 | 160 | 200 | 8 | 19 | 22 |
| 100 | 156 | 180 | 220 | 8 | 19 | 24 |
| 125 | 184 | 210 | 250 | 8 | 19 | 24 |

| TYPE | | | mm | | | | | | | | | | | | | | | | |
|---|---|---|---|---|---|---|---|---|---|---|---|---|---|---|---|---|---|---|---|
| | DN1 | DN2 | a | fM | g1 | g2 | h1 | h2 | HD | l1 | l2 | m1 | m2 | m3 | n1 | n2 | n3 | s1 | w |
| BNMS 40/160A-S | 65 | 40 | 80 | 646 | 4 | 8 | 180 | 160 | 340 | 120 | 122 | 190 | 190 | 250 | 250 | 190 | 130 | 14 | 407 |
| BNMS 50/125S-S | 65 | 50 | 100 | 666 | 4 | 8 | 180 | 160 | 340 | 122 | 137 | 190 | 190 | 250 | 250 | 190 | 130 | 14 | 407 |

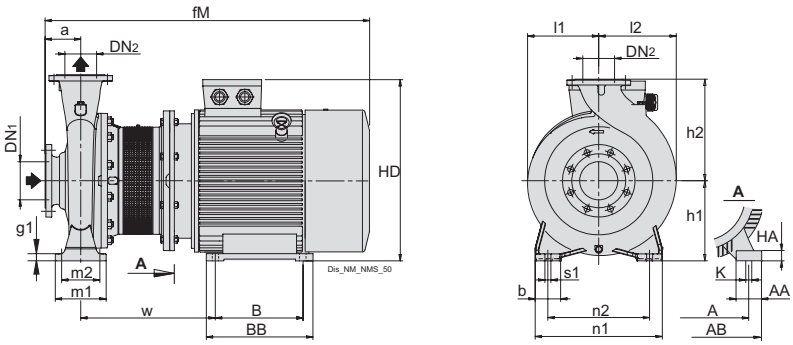


**Flanges EN 1092-2** PN 10-16

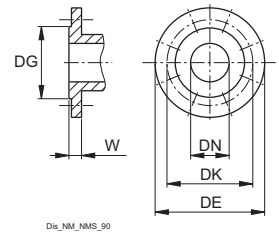


| mm | | | | | | |
|---|---|---|---|---|---|---|
| DN | DG | DK | DE | Holes N° | Holes ø | W |
| 32 | 76 | 100 | 140 | 4 | 19 | 18 |
| 40 | 84 | 110 | 150 | 4 | 19 | 18 |
| 50 | 99 | 125 | 165 | 4 | 19 | 20 |
| 65 | 118 | 145 | 185 | 4 | 19 | 20 |
| 80 | 132 | 160 | 200 | 8 | 19 | 22 |
| 100 | 156 | 180 | 220 | 8 | 19 | 24 |
| 125 | 184 | 210 | 250 | 8 | 19 | 24 |

| TYPE | | | mm | | | | | | | | | | | | | | | | | | | | | |
|---|---|---|---|---|---|---|---|---|---|---|---|---|---|---|---|---|---|---|---|---|---|---|---|---|
| | DN1 | DN2 | a | A | AA | AB | b | B | BB | fM | g1 | h1 | h2 | HA | HD | K | l1 | l2 | m1 | m2 | n1 | n2 | s1 | w |
| BNMS 65/200A | 80 | 65 | 100 | 279 | 70 | 350 | 65 | 241 | 315 | 915 | 12 | 180 | 225 | 22 | 450 | 15 | 159 | 179 | 125 | 95 | 320 | 250 | 14 | 394 |
| BNMS 65/250B/B | 80 | 65 | 100 | 318 | 70 | 388 | 80 | 305 | 370 | 1001 | 15 | 200 | 250 | 25 | 500 | 19 | 178 | 195 | 160 | 120 | 360 | 280 | 18 | 406 |
| BNMS 65/250A/B | 80 | 65 | 100 | 318 | 70 | 388 | 80 | 305 | 370 | 1001 | 15 | 200 | 250 | 25 | 500 | 19 | 178 | 195 | 160 | 120 | 360 | 280 | 18 | 406 |
| BNMS 80/200B/B | 100 | 80 | 125 | 279 | 70 | 350 | 65 | 241 | 315 | 940 | 15 | 180 | 250 | 22 | 450 | 15 | 170 | 194 | 125 | 95 | 345 | 280 | 14 | 394 |
| BNMS 80/250D/A | 100 | 80 | 125 | 318 | 70 | 388 | 80 | 305 | 370 | 1026 | 20 | 200 | 280 | 25 | 500 | 19 | 191 | 211 | 160 | 120 | 400 | 315 | 18 | 406 |
| BNMS 80/250C/A | 100 | 80 | 125 | 318 | 70 | 388 | 80 | 305 | 370 | 1026 | 20 | 200 | 280 | 25 | 500 | 19 | 191 | 211 | 160 | 120 | 400 | 315 | 18 | 406 |
| BNMS 100/200C/A | 125 | 100 | 125 | 318 | 70 | 388 | 80 | 305 | 370 | 1026 | 15 | 200 | 280 | 25 | 500 | 19 | 179 | 211 | 160 | 120 | 360 | 280 | 18 | 406 |
| BNMS 100/200B/A | 125 | 100 | 125 | 318 | 70 | 388 | 80 | 305 | 370 | 1026 | 15 | 200 | 280 | 25 | 500 | 19 | 179 | 211 | 160 | 120 | 360 | 280 | 18 | 406 |

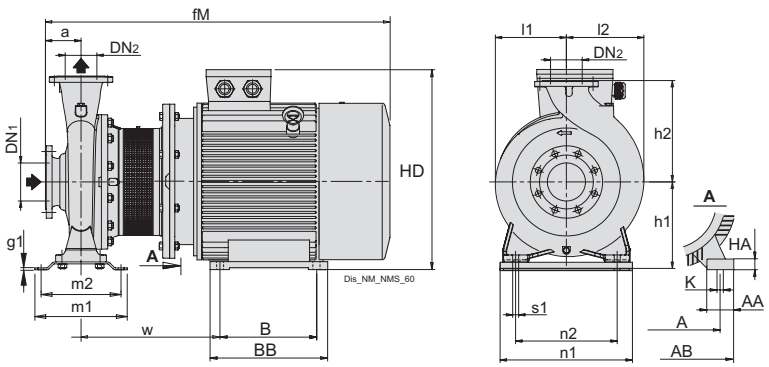


**Flanges EN 1092-2** PN 10-16

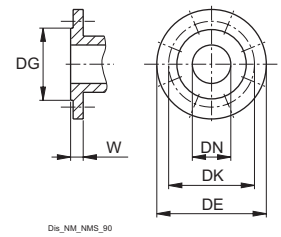


| mm | | | | | | |
|---|---|---|---|---|---|---|
| DN | DG | DK | DE | Holes N° | Holes ø | W |
| 32 | 76 | 100 | 140 | 4 | 19 | 18 |
| 40 | 84 | 110 | 150 | 4 | 19 | 18 |
| 50 | 99 | 125 | 165 | 4 | 19 | 20 |
| 65 | 118 | 145 | 185 | 4 | 19 | 20 |
| 80 | 132 | 160 | 200 | 8 | 19 | 22 |
| 100 | 156 | 180 | 220 | 8 | 19 | 24 |
| 125 | 184 | 210 | 250 | 8 | 19 | 24 |

| TYPE | | | mm | | | | | | | | | | | | | | | | | | | | | |
|---|---|---|---|---|---|---|---|---|---|---|---|---|---|---|---|---|---|---|---|---|---|---|---|---|
| | DN1 | DN2 | a | A | AA | AB | B | BB | fM | g1 | h1 | h2 | HA | HD | K | l1 | l2 | m1 | m2 | n1 | n2 | s1 | w |
| BNMS 80/200A/B | 100 | 80 | 125 | 318 | 70 | 388 | 305 | 370 | 1026 | 6 | 200 | 250 | 25 | 500 | 19 | 170 | 194 | 227 | 191 | 350 | 280 | 14 | 406 |
| BNMS 80/250B/A | 100 | 80 | 125 | 356 | 75 | 431 | 311 | 395 | 1125 | 6 | 225 | 280 | 28 | 548 | 19 | 191 | 211 | 298 | 258 | 410 | 315 | 18 | 445 |
| BNMS 100/200A/A | 125 | 100 | 125 | 356 | 75 | 431 | 311 | 395 | 1125 | 6 | 225 | 280 | 28 | 548 | 19 | 179 | 211 | 298 | 258 | 410 | 315 | 18 | 445 |
| BNMS 100/250A/A | 125 | 100 | 140 | 457 | 85 | 545 | 368 | 490 | 1264 | 6 | 280 | 280 | 35 | 669 | 24 | 205 | 233 | 260 | 220 | 410 | 315 | 18 | 516 |

# NM, NMS

## Dimensions and weights with IE4 motor

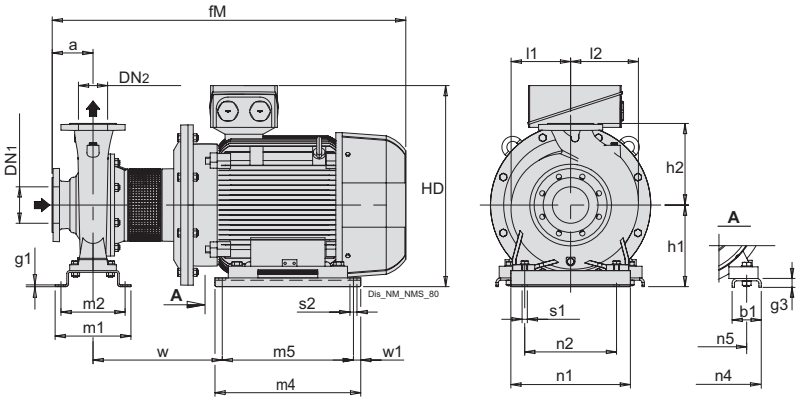


**Flanges EN 1092-2** PN 10-16

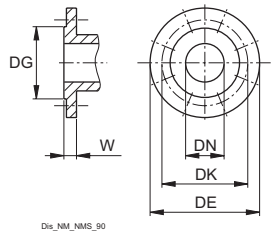


| mm | | | | | | |
|---|---|---|---|---|---|---|
| DN | DG | DK | DE | Holes N° | Holes ø | W |
| 32 | 76 | 100 | 140 | 4 | 19 | 18 |
| 40 | 84 | 110 | 150 | 4 | 19 | 18 |
| 50 | 99 | 125 | 165 | 4 | 19 | 20 |
| 65 | 118 | 145 | 185 | 4 | 19 | 20 |
| 80 | 132 | 160 | 200 | 8 | 19 | 22 |
| 100 | 156 | 180 | 220 | 8 | 19 | 24 |
| 125 | 184 | 210 | 250 | 8 | 19 | 24 |

| TYPE | | | mm | | | | | | | | | | | | | | | | | | | | | |
|---|---|---|---|---|---|---|---|---|---|---|---|---|---|---|---|---|---|---|---|---|---|---|---|---|
| | DN1 | DN2 | a | b1 | fM | g1 | g3 | h1 | h2 | HD | l1 | l2 | m1 | m2 | m4 | m5 | n1 | n2 | n4 | n5 | s1 | s2 | w | w1 |
| BNMS 50/200B | 65 | 50 | 100 | 80 | 829 | 4 | 20 | 180 | 200 | 433 | 142 | 152 | 245 | 212 | 394 | 354 | 290 | 215 | 334 | 254 | 14 | 15 | 314 | 20 |
| BNMS 50/200A | 65 | 50 | 100 | 80 | 829 | 4 | 20 | 180 | 200 | 433 | 142 | 152 | 245 | 212 | 394 | 354 | 290 | 215 | 334 | 254 | 14 | 15 | 314 | 20 |
| BNMS 50/200S | 65 | 50 | 100 | 80 | 829 | 4 | 20 | 180 | 200 | 433 | 142 | 152 | 245 | 212 | 394 | 354 | 290 | 215 | 334 | 254 | 14 | 15 | 314 | 20 |
| BNMS 65/160C | 80 | 65 | 100 | 80 | 829 | 4 | 20 | 180 | 200 | 433 | 140 | 161 | 245 | 212 | 394 | 354 | 290 | 215 | 334 | 254 | 14 | 15 | 314 | 20 |
| BNMS 65/160B | 80 | 65 | 100 | 80 | 829 | 4 | 20 | 180 | 200 | 433 | 140 | 161 | 245 | 212 | 394 | 354 | 290 | 215 | 334 | 254 | 14 | 15 | 314 | 20 |
| BNMS 65/160AR | 80 | 65 | 100 | 80 | 829 | 4 | 20 | 180 | 200 | 433 | 140 | 161 | 245 | 212 | 394 | 354 | 290 | 215 | 334 | 254 | 14 | 15 | 314 | 20 |
| BNMS 65/160A | 80 | 65 | 100 | 80 | 829 | 4 | 20 | 180 | 200 | 433 | 140 | 161 | 245 | 212 | 394 | 354 | 290 | 215 | 334 | 254 | 14 | 15 | 314 | 20 |
| BNMS 80/250A/A | 100 | 80 | 125 | 100 | 1187 | 6 | 30 | 280 | 280 | 642 | 191 | 211 | 260 | 220 | 570 | 520 | 410 | 315 | 506 | 406 | 18 | 24 | 408 | 25 |
| BNMS 100/250B/A | 125 | 100 | 140 | 100 | 1202 | 6 | 30 | 280 | 280 | 642 | 205 | 233 | 260 | 220 | 570 | 520 | 410 | 315 | 506 | 406 | 18 | 24 | 408 | 25 |

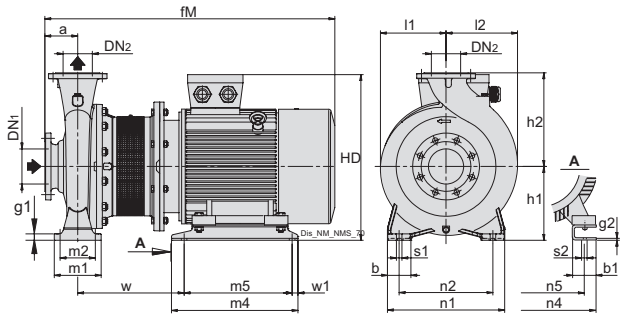


**Flanges EN 1092-2** PN 10-16

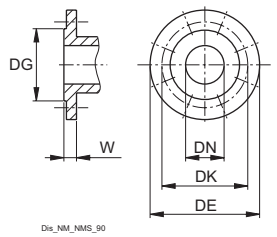


| mm | | | | | | |
|---|---|---|---|---|---|---|
| DN | DG | DK | DE | Holes N° | Holes ø | W |
| 32 | 76 | 100 | 140 | 4 | 19 | 18 |
| 40 | 84 | 110 | 150 | 4 | 19 | 18 |
| 50 | 99 | 125 | 165 | 4 | 19 | 20 |
| 65 | 118 | 145 | 185 | 4 | 19 | 20 |
| 80 | 132 | 160 | 200 | 8 | 19 | 22 |
| 100 | 156 | 180 | 220 | 8 | 19 | 24 |
| 125 | 184 | 210 | 250 | 8 | 19 | 24 |

| TYPE | | | mm | | | | | | | | | | | | | | | | | | | | | |
|---|---|---|---|---|---|---|---|---|---|---|---|---|---|---|---|---|---|---|---|---|---|---|---|---|
| | DN1 | DN2 | a | b | b1 | fM | g1 | g3 | h1 | h2 | HD | l1 | l2 | m1 | m2 | m4 | m5 | n1 | n2 | n4 | n5 | s1 | s2 | w | w1 |
| BNMS 40/250C | 65 | 40 | 100 | 65 | 80 | 829 | 15 | 20 | 180 | 225 | 433 | 177 | 177 | 125 | 95 | 394 | 354 | 320 | 250 | 334 | 254 | 14 | 15 | 314 | 20 |
| BNMS 40/250B | 65 | 40 | 100 | 65 | 80 | 829 | 15 | 20 | 180 | 225 | 433 | 177 | 177 | 125 | 95 | 394 | 354 | 320 | 250 | 334 | 254 | 14 | 15 | 314 | 20 |
| BNMS 40/250A | 65 | 40 | 100 | 65 | 80 | 829 | 15 | 20 | 180 | 225 | 433 | 177 | 177 | 125 | 95 | 394 | 354 | 320 | 250 | 334 | 254 | 14 | 15 | 314 | 20 |
| BNMS 50/250C | 65 | 50 | 100 | 65 | 80 | 829 | 15 | 20 | 180 | 225 | 433 | 177 | 177 | 125 | 95 | 394 | 354 | 320 | 250 | 334 | 254 | 14 | 15 | 314 | 20 |
| BNMS 50/250B | 65 | 50 | 100 | 65 | 80 | 829 | 15 | 20 | 180 | 225 | 433 | 177 | 177 | 125 | 95 | 394 | 354 | 320 | 250 | 334 | 254 | 14 | 15 | 314 | 20 |
| BNMS 50/250A | 65 | 50 | 100 | 65 | 80 | 873 | 15 | 20 | 180 | 225 | 433 | 177 | 177 | 125 | 95 | 394 | 354 | 320 | 250 | 334 | 254 | 14 | 15 | 314 | 20 |
| BNMS 65/200C | 80 | 65 | 100 | 65 | 80 | 829 | 12 | 20 | 180 | 225 | 433 | 159 | 179 | 125 | 95 | 394 | 354 | 320 | 250 | 334 | 254 | 14 | 15 | 314 | 20 |
| BNMS 65/200B | 80 | 65 | 100 | 65 | 80 | 873 | 12 | 20 | 180 | 225 | 433 | 159 | 179 | 125 | 95 | 394 | 354 | 320 | 250 | 334 | 254 | 14 | 15 | 314 | 20 |
| BNMS 65/250C | 80 | 65 | 100 | 80 | 70 | 915 | 15 | 20 | 200 | 250 | 470 | 178 | 195 | 160 | 120 | 440 | 400 | 360 | 280 | 349 | 279 | 18 | 15 | 333 | 20 |
| BNMS 80/160D | 100 | 80 | 125 | 65 | 80 | 854 | 12 | 20 | 180 | 225 | 433 | 152 | 181 | 125 | 95 | 394 | 354 | 320 | 250 | 334 | 254 | 14 | 15 | 314 | 20 |
| BNMS 80/160C | 100 | 80 | 125 | 65 | 80 | 854 | 12 | 20 | 180 | 225 | 433 | 152 | 181 | 125 | 95 | 394 | 354 | 320 | 250 | 334 | 254 | 14 | 15 | 314 | 20 |
| BNMS 80/160B | 100 | 80 | 125 | 65 | 80 | 854 | 12 | 20 | 180 | 225 | 433 | 152 | 181 | 125 | 95 | 394 | 354 | 320 | 250 | 334 | 254 | 14 | 15 | 314 | 20 |
| BNMS 80/160A | 100 | 80 | 125 | 65 | 80 | 898 | 12 | 20 | 180 | 225 | 433 | 152 | 181 | 125 | 95 | 394 | 354 | 320 | 250 | 334 | 254 | 14 | 15 | 314 | 20 |
| BNMS 80/250E | 100 | 80 | 125 | 80 | 70 | 940 | 20 | 20 | 200 | 280 | 470 | 191 | 211 | 160 | 120 | 440 | 400 | 400 | 315 | 349 | 279 | 18 | 15 | 333 | 20 |
| BNMS 100/200E | 125 | 100 | 125 | 80 | 60 | 923 | 15 | 40 | 200 | 280 | 453 | 179 | 211 | 160 | 120 | 394 | 354 | 360 | 280 | 314 | 254 | 18 | 15 | 339 | 20 |
| BNMS 100/200D/A | 125 | 100 | 125 | 80 | 70 | 940 | 15 | 20 | 200 | 280 | 470 | 179 | 211 | 160 | 120 | 440 | 400 | 360 | 280 | 349 | 279 | 18 | 15 | 333 | 20 |

# NM4, NMS4

## Dimensions and weights

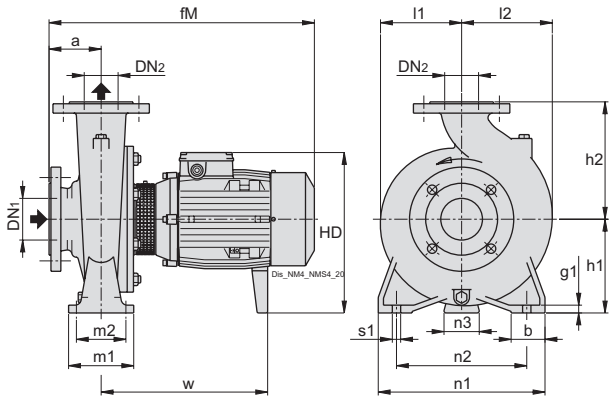


**Flanges EN 1092-2** PN 10-16

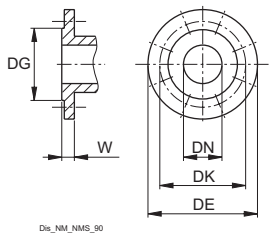


| mm | | | | | | |
|---|---|---|---|---|---|---|
| DN | DG | DK | DE | Holes N° | Holes ø | W |
| 32 | 76 | 100 | 140 | 4 | 19 | 18 |
| 40 | 84 | 110 | 150 | 4 | 19 | 18 |
| 50 | 99 | 125 | 165 | 4 | 19 | 20 |
| 65 | 118 | 145 | 185 | 4 | 19 | 20 |
| 80 | 132 | 160 | 200 | 8 | 19 | 22 |
| 100 | 156 | 180 | 220 | 8 | 19 | 24 |
| 125 | 184 | 210 | 250 | 8 | 19 | 24 |

| TYPE | | | mm | | | | | | | | | | | | | | | | kg |
|---|---|---|---|---|---|---|---|---|---|---|---|---|---|---|---|---|---|---|---|
| | DN1 | DN2 | a | b | fM | g1 | h1 | h2 | HD | l1 | l2 | m1 | m2 | n1 | n2 | n3 | s1 | w | Weight |
| NM4 32/20B/A | 50 | 32 | 80 | 50 | 413 | 12 | 160 | 180 | 290 | 140 | 140 | 100 | 70 | 240 | 190 | 40 | 14 | 257 | 36.2 |
| NM4 32/20A/B | 50 | 32 | 80 | 50 | 453 | 12 | 160 | 180 | 290 | 140 | 140 | 100 | 70 | 240 | 190 | 40 | 14 | 297 | 41 |
| NM4 32/16B/A | 50 | 32 | 80 | 50 | 413 | 12 | 132 | 160 | 262 | 119 | 119 | 100 | 70 | 240 | 190 | 35 | 14 | 255 | 29.8 |
| NM4 32/16A/A | 50 | 32 | 80 | 50 | 413 | 12 | 132 | 160 | 262 | 119 | 119 | 100 | 70 | 240 | 190 | 35 | 14 | 255 | 29.7 |
| NM4 40/25C/C | 65 | 40 | 100 | 65 | 499 | 15 | 180 | 225 | 320 | 177 | 177 | 125 | 95 | 320 | 250 | 41 | 14 | 299 | 66.7 |
| NM4 40/25B/C | 65 | 40 | 100 | 65 | 559 | 15 | 180 | 225 | 347 | 177 | 177 | 125 | 95 | 320 | 250 | 37 | 14 | 337 | 79 |
| NM4 40/25A/B | 65 | 40 | 100 | 65 | 559 | 15 | 180 | 225 | 347 | 177 | 177 | 125 | 95 | 320 | 250 | 37 | 14 | 337 | 78.7 |
| NM4 40/20B/B | 65 | 40 | 100 | 50 | 499 | 12 | 160 | 180 | 300 | 141 | 141 | 100 | 70 | 265 | 212 | 37 | 14 | 297 | 49.6 |
| NM4 40/20A/B | 65 | 40 | 100 | 50 | 499 | 12 | 160 | 180 | 300 | 141 | 141 | 100 | 70 | 265 | 212 | 37 | 14 | 297 | 49.6 |
| NM4 40/16C/B | 65 | 40 | 80 | 50 | 413 | 10 | 132 | 160 | 262 | 120 | 122 | 100 | 70 | 240 | 190 | 35 | 14 | 255 | 29.9 |
| NM4 40/16B/B | 65 | 40 | 80 | 50 | 413 | 10 | 132 | 160 | 262 | 120 | 122 | 100 | 70 | 240 | 190 | 35 | 14 | 255 | 31.6 |
| NM4 40/16A/C | 65 | 40 | 80 | 50 | 453 | 10 | 132 | 160 | 262 | 120 | 122 | 100 | 70 | 240 | 190 | 35 | 14 | 295 | 38.2 |
| NM4 50/16B/C | 65 | 50 | 100 | 50 | 499 | 12 | 160 | 180 | 300 | 125 | 140 | 100 | 70 | 265 | 212 | 37 | 14 | 297 | 42.5 |
| NM4 50/16A/C | 65 | 50 | 100 | 50 | 499 | 12 | 160 | 180 | 300 | 125 | 140 | 100 | 70 | 265 | 212 | 37 | 14 | 297 | 42.5 |
| NM4 50/20C/C | 65 | 50 | 100 | 50 | 509 | 14 | 160 | 200 | 300 | 142 | 152 | 100 | 70 | 265 | 212 | 37 | 14 | 307 | 53.1 |
| NM4 50/20B/C | 65 | 50 | 100 | 50 | 509 | 14 | 160 | 200 | 300 | 142 | 152 | 100 | 70 | 265 | 212 | 37 | 14 | 307 | 56.4 |
| NM4 50/20A/C | 65 | 50 | 100 | 50 | 559 | 14 | 160 | 200 | 327 | 142 | 152 | 100 | 70 | 265 | 212 | 34 | 14 | 335 | 66.2 |
| NM4 50/25D/B | 65 | 50 | 100 | 65 | 559 | 15 | 180 | 225 | 347 | 177 | 177 | 125 | 95 | 320 | 250 | 37 | 14 | 337 | 79.8 |
| NM4 50/25C/C | 65 | 50 | 100 | 65 | 559 | 15 | 180 | 225 | 347 | 177 | 177 | 125 | 95 | 320 | 250 | 37 | 14 | 337 | 80.5 |
| NM4 50/25B/B | 65 | 50 | 100 | 65 | 559 | 15 | 180 | 225 | 347 | 177 | 177 | 125 | 95 | 320 | 250 | 37 | 14 | 337 | 81 |
| NM4 50/25A/B | 65 | 50 | 100 | 65 | 559 | 15 | 180 | 225 | 347 | 177 | 177 | 125 | 95 | 320 | 250 | 37 | 14 | 337 | 88.4 |
| NM4 65/16C/C | 80 | 65 | 100 | 65 | 499 | 12 | 160 | 200 | 300 | 140 | 161 | 125 | 95 | 280 | 212 | 37 | 14 | 297 | 48.7 |
| NM4 65/16B/C | 80 | 65 | 100 | 65 | 499 | 12 | 160 | 200 | 300 | 140 | 161 | 125 | 95 | 280 | 212 | 37 | 14 | 297 | 49.3 |
| NM4 65/16A/C | 80 | 65 | 100 | 65 | 499 | 12 | 160 | 200 | 300 | 140 | 161 | 125 | 95 | 280 | 212 | 37 | 14 | 297 | 52.4 |
| NM4 65/16S/A | 80 | 65 | 100 | 65 | 559 | 12 | 160 | 200 | 327 | 140 | 161 | 125 | 95 | 280 | 212 | 34 | 14 | 335 | 63.4 |
| NM4 65/20B/C | 80 | 65 | 100 | 65 | 559 | 12 | 180 | 225 | 347 | 159 | 179 | 125 | 95 | 320 | 250 | 37 | 14 | 337 | 69.6 |
| NM4 65/20A/B | 80 | 65 | 100 | 65 | 559 | 12 | 180 | 225 | 347 | 159 | 179 | 125 | 95 | 320 | 250 | 37 | 14 | 337 | 70.3 |
| NM4 65/25B/B | 80 | 65 | 100 | 80 | 574 | 15 | 200 | 250 | 367 | 178 | 195 | 160 | 120 | 360 | 280 | 41 | 18 | 354 | 98.1 |
| NM4 65/25A/C | 80 | 65 | 100 | 80 | 644 | 15 | 200 | 250 | 390 | 178 | 195 | 160 | 120 | 360 | 280 | 38 | 18 | 403 | 115.5 |
| NM4 65/31C/B | 80 | 65 | 125 | 80 | 669 | 20 | 225 | 280 | 415 | 223 | 223 | 160 | 120 | 400 | 315 | 43 | 18 | 406 | 155.5 |
| NM4 65/31B/B | 80 | 65 | 125 | 80 | 669 | 20 | 225 | 280 | 415 | 223 | 223 | 160 | 120 | 400 | 315 | 43 | 18 | 406 | 164.3 |
| NM4 65/31A/B | 80 | 65 | 125 | 80 | 744 | 20 | 225 | 280 | 415 | 223 | 223 | 160 | 120 | 400 | 315 | 43 | 18 | 481 | 168 |
| NM4 80/16C/C | 100 | 80 | 125 | 65 | 524 | 12 | 180 | 225 | 320 | 152 | 181 | 125 | 95 | 320 | 250 | 41 | 14 | 299 | 55.6 |
| NM4 80/16B/C | 100 | 80 | 125 | 65 | 524 | 12 | 180 | 225 | 320 | 152 | 181 | 125 | 95 | 320 | 250 | 41 | 14 | 299 | 59.6 |
| NM4 80/16A/C | 100 | 80 | 125 | 65 | 584 | 12 | 180 | 225 | 347 | 152 | 181 | 125 | 95 | 320 | 250 | 37 | 14 | 337 | 70.5 |
| NM4 80/20C/C | 100 | 80 | 125 | 65 | 594 | 15 | 180 | 250 | 347 | 170 | 194 | 125 | 95 | 345 | 280 | 37 | 14 | 347 | 77.4 |
| NM4 80/20B/B | 100 | 80 | 125 | 65 | 594 | 15 | 180 | 250 | 347 | 170 | 194 | 125 | 95 | 345 | 280 | 37 | 14 | 347 | 77.3 |
| NM4 80/20A/B | 100 | 80 | 125 | 65 | 594 | 15 | 180 | 250 | 347 | 170 | 194 | 125 | 95 | 345 | 280 | 37 | 14 | 347 | 85.5 |
| NM4 80/25C/A | 100 | 80 | 125 | 80 | 599 | 20 | 200 | 280 | 367 | 191 | 211 | 160 | 120 | 400 | 315 | 41 | 18 | 354 | 103.9 |
| NM4 80/25B/B | 100 | 80 | 125 | 80 | 669 | 20 | 200 | 280 | 390 | 191 | 211 | 160 | 120 | 400 | 315 | 38 | 18 | 403 | 120 |
| NM4 80/25A/B | 100 | 80 | 125 | 80 | 669 | 20 | 200 | 280 | 390 | 191 | 211 | 160 | 120 | 400 | 315 | 38 | 18 | 403 | 130.6 |
| NM4 80/31C/B | 100 | 80 | 125 | 80 | 744 | 17 | 250 | 315 | 440 | 222 | 234 | 160 | 120 | 400 | 315 | 47 | 18 | 483 | 171.1 |
| NM4 100/20C/A | 125 | 100 | 125 | 80 | 594 | 15 | 200 | 280 | 367 | 179 | 211 | 160 | 120 | 360 | 280 | 41 | 18 | 349 | 85 |
| NM4 100/20B/A | 125 | 100 | 125 | 80 | 594 | 15 | 200 | 280 | 367 | 179 | 211 | 160 | 120 | 360 | 280 | 41 | 18 | 349 | 92.9 |
| NM4 100/20A/C | 125 | 100 | 125 | 80 | 669 | 15 | 200 | 280 | 390 | 179 | 211 | 160 | 120 | 360 | 280 | 38 | 18 | 403 | 109 |
| NM4 100/25B/B | 125 | 100 | 140 | 80 | 684 | 20 | 225 | 280 | 415 | 205 | 233 | 160 | 120 | 400 | 315 | 43 | 18 | 406 | 141.4 |
| NM4 100/25A/B | 125 | 100 | 140 | 80 | 759 | 20 | 225 | 280 | 415 | 205 | 233 | 160 | 120 | 400 | 315 | 43 | 18 | 481 | 152.9 |
| NM4 125/25E/B | 150 | 125 | 140 | 80 | 684 | 20 | 250 | 355 | 440 | 236 | 268 | 160 | 120 | 400 | 315 | 47 | 18 | 408 | 149.5 |
| NM4 125/25D/B | 150 | 125 | 140 | 80 | 684 | 20 | 250 | 355 | 440 | 236 | 268 | 160 | 120 | 400 | 315 | 47 | 18 | 408 | 159.8 |
| NM4 125/25C/B | 150 | 125 | 140 | 80 | 759 | 20 | 250 | 355 | 440 | 236 | 268 | 160 | 120 | 400 | 315 | 47 | 18 | 483 | 171.2 |

# NM4, NMS4

## Dimensions and weights

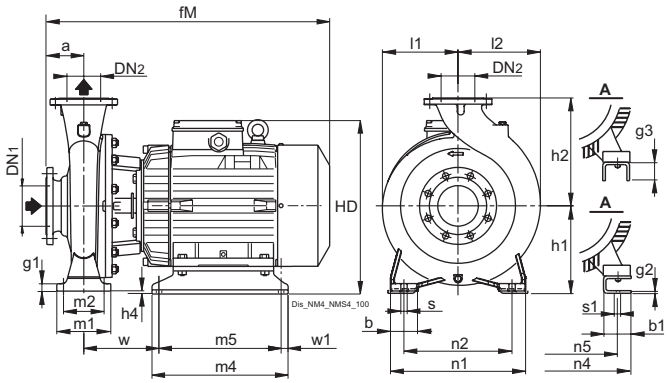


**Flanges EN 1092-2** PN 10-16

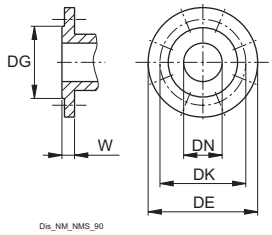


| mm | | | | | | |
|---|---|---|---|---|---|---|
| DN | DG | DK | DE | Holes N° | Holes ø | W |
| 32 | 76 | 100 | 140 | 4 | 19 | 18 |
| 40 | 84 | 110 | 150 | 4 | 19 | 18 |
| 50 | 99 | 125 | 165 | 4 | 19 | 20 |
| 65 | 118 | 145 | 185 | 4 | 19 | 20 |
| 80 | 132 | 160 | 200 | 8 | 19 | 22 |
| 100 | 156 | 180 | 220 | 8 | 19 | 24 |
| 125 | 184 | 210 | 250 | 8 | 19 | 24 |

| TYPE | | | mm | | | | | | | | | | | | | | | | | | | | | | | | kg |
|---|---|---|---|---|---|---|---|---|---|---|---|---|---|---|---|---|---|---|---|---|---|---|---|---|---|---|---|
| | DN1 | DN2 | a | b | b1 | fM | g1 | g2 | h1 | h2 | h4 | HD | l1 | l2 | m1 | m2 | m4 | m5 | n1 | n2 | n4 | n5 | s1 | s2 | w | w1 | Weight |
| **NM4 80/31B** | 100 | 80 | 125 | 80 | 74 | 790 | 20 | 6 | 250 | 315 | 10 | 458 | 222 | 234 | 160 | 120 | 435 | 395 | 400 | 315 | 314 | 254 | 18 | 14 | 147 | 20 | 212 |
| **NM4 80/31A** | 100 | 80 | 125 | 80 | 74 | 790 | 20 | 6 | 250 | 315 | 10 | 458 | 222 | 234 | 160 | 120 | 435 | 395 | 400 | 315 | 314 | 254 | 18 | 14 | 147 | 20 | 226 |
| **NM4 100/31C** | 125 | 100 | 140 | 80 | 74 | 805 | 20 | 6 | 250 | 315 | 10 | 458 | 229 | 251 | 160 | 120 | 435 | 395 | 400 | 315 | 314 | 254 | 18 | 14 | 147 | 20 | 221.1 |
| **NM4 100/31B** | 125 | 100 | 140 | 80 | 74 | 805 | 20 | 6 | 250 | 315 | 10 | 458 | 229 | 251 | 160 | 120 | 435 | 395 | 400 | 315 | 314 | 254 | 18 | 14 | 147 | 20 | 235.2 |
| **NM4 125/25B** | 150 | 125 | 140 | 80 | 74 | 805 | 20 | 6 | 250 | 355 | 10 | 458 | 236 | 268 | 160 | 120 | 435 | 395 | 400 | 315 | 314 | 254 | 18 | 14 | 147 | 20 | 210.5 |
| **NM4 125/25A** | 150 | 125 | 140 | 80 | 74 | 805 | 20 | 6 | 250 | 355 | 10 | 458 | 236 | 268 | 160 | 120 | 435 | 395 | 400 | 315 | 314 | 254 | 18 | 14 | 147 | 20 | 223.2 |

# NM4, NMS4

## Dimensions and weights with IE3 motor

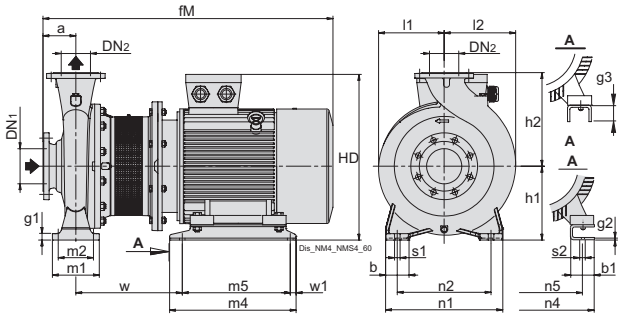


**Flanges EN 1092-2** PN 10-16 (DN 200 PN 10)

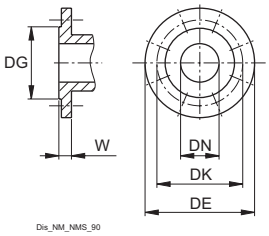


| mm | | | | | | |
|---|---|---|---|---|---|---|
| DN | DG | DK | DE | Holes N° | Holes ø | W |
| 32 | 76 | 100 | 140 | 4 | 19 | 18 |
| 40 | 84 | 110 | 150 | 4 | 19 | 18 |
| 50 | 99 | 125 | 165 | 4 | 19 | 20 |
| 65 | 118 | 145 | 185 | 4 | 19 | 20 |
| 80 | 132 | 160 | 200 | 8 | 19 | 22 |
| 100 | 156 | 180 | 220 | 8 | 19 | 24 |
| 125 | 184 | 210 | 250 | 8 | 19 | 24 |
| 150 | 211 | 240 | 285 | 8 | 23 | 26 |
| 200 | 266 | 295 | 340 | 8* | 23 | 30 |
| 250 | 319 | 355 | 405 | 12 | 28 | 26 |

| TYPE | | | mm | | | | | | | | | | | | | | | | | | | | | | | | kg |
|---|---|---|---|---|---|---|---|---|---|---|---|---|---|---|---|---|---|---|---|---|---|---|---|---|---|---|---|
| | DN1 | DN2 | a | b | b1 | fM | g1 | g2 | g3 | h1 | h2 | HD | l1 | l2 | m1 | m2 | m4 | m5 | n1 | n2 | n4 | n5 | s1 | s2 | w | w1 | Weight |
| NMS4 65/315A | 80 | 65 | 125 | 80 | 85 | 885 | 20 | - | 65 | 225 | 280 | 475 | 223 | 223 | 160 | 120 | 394 | 354 | 400 | 315 | 339 | 254 | 18 | 14 | 343 | 20 | - |
| NMS4 80/315S | 100 | 80 | 125 | 80 | 70 | 992 | 20 | 6 | - | 250 | 315 | 520 | 222 | 234 | 160 | 120 | 432 | 382 | 400 | 315 | 349 | 279 | 18 | 15 | 312 | 25 | - |
| NMS4 80/315A | 100 | 80 | 125 | 80 | 60 | 932 | 20 | 6 | - | 250 | 315 | 500 | 222 | 234 | 160 | 120 | 480 | 440 | 400 | 315 | 314 | 254 | 18 | 15 | 281 | 20 | - |
| NMS4 80/315B/A | 100 | 80 | 125 | 80 | 60 | 885 | 20 | 6 | - | 250 | 315 | 500 | 222 | 234 | 160 | 120 | 480 | 440 | 400 | 315 | 314 | 254 | 18 | 15 | 281 | 20 | - |
| NMS4 80/315C | 100 | 80 | 125 | 80 | 60 | 885 | 20 | 6 | - | 250 | 315 | 500 | 222 | 234 | 160 | 120 | 480 | 440 | 400 | 315 | 314 | 254 | 18 | 15 | 281 | 20 | - |
| NMS4 80/400S | 125 | 80 | 125 | 80 | 103 | 1123 | 15 | - | 55 | 280 | 355 | 610 | 267 | 269 | 160 | 120 | 540 | 490 | 435 | 355 | 459 | 356 | 18 | 19 | 379 | 25 | - |
| NMS4 80/400A/B | 125 | 80 | 125 | 80 | 83 | 1048 | 15 | 6 | - | 280 | 355 | 580 | 267 | 269 | 160 | 120 | 540 | 455 | 435 | 355 | 401 | 318 | 18 | 19 | 334 | 25 | - |
| NMS4 80/400B/B | 125 | 80 | 125 | 80 | 70 | 1030 | 15 | 6 | - | 280 | 355 | 566 | 267 | 269 | 160 | 120 | 520 | 435 | 435 | 355 | 349 | 279 | 18 | 15 | 318 | 25 | - |
| NMS4 80/400C/B | 125 | 80 | 125 | 80 | 70 | 997 | 15 | 6 | - | 280 | 355 | 550 | 267 | 269 | 160 | 120 | 520 | 435 | 435 | 355 | 349 | 279 | 18 | 15 | 318 | 25 | - |
| NMS4 100/250A/A | 125 | 100 | 140 | 80 | 85 | 888 | 20 | - | 65 | 225 | 280 | 475 | 205 | 233 | 160 | 120 | 394 | 354 | 400 | 315 | 339 | 254 | 18 | 14 | 331 | 20 | - |
| NMS4 100/315A/A | 125 | 100 | 140 | 80 | 70 | 1007 | 20 | 6 | - | 250 | 315 | 520 | 229 | 251 | 160 | 120 | 432 | 382 | 400 | 315 | 349 | 279 | 18 | 15 | 312 | 25 | - |
| NMS4 100/315B/A | 125 | 100 | 140 | 80 | 60 | 947 | 20 | 6 | - | 250 | 315 | 500 | 229 | 251 | 160 | 120 | 480 | 440 | 400 | 315 | 314 | 254 | 18 | 15 | 281 | 20 | - |
| NMS4 100/315C/A | 125 | 100 | 140 | 80 | 60 | 900 | 20 | 6 | - | 250 | 315 | 500 | 229 | 251 | 160 | 120 | 480 | 440 | 400 | 315 | 314 | 254 | 18 | 15 | 281 | 20 | - |
| NMS4 100/400A/A | 125 | 100 | 140 | 100 | 103 | 1143 | 27 | - | 55 | 280 | 355 | 610 | 268 | 280 | 200 | 150 | 540 | 490 | 500 | 400 | 459 | 356 | 22 | 19 | 384 | 25 | 504 |
| NMS4 100/400B/A | 125 | 100 | 140 | 100 | 83 | 1063 | 27 | 6 | - | 280 | 355 | 580 | 268 | 280 | 200 | 150 | 540 | 455 | 500 | 400 | 401 | 318 | 22 | 19 | 334 | 25 | - |
| NMS4 100/400C/A | 125 | 100 | 140 | 100 | 70 | 1045 | 27 | 6 | - | 280 | 355 | 566 | 268 | 280 | 200 | 150 | 520 | 435 | 500 | 400 | 349 | 279 | 22 | 15 | 318 | 25 | - |
| NMS4 125/250A/A | 150 | 125 | 140 | 80 | 60 | 935 | 20 | 6 | - | 250 | 355 | 500 | 236 | 268 | 160 | 120 | 480 | 440 | 400 | 315 | 314 | 254 | 18 | 15 | 269 | 20 | - |
| NMS4 125/250B/A | 150 | 125 | 140 | 80 | 60 | 888 | 20 | 6 | - | 250 | 355 | 500 | 236 | 268 | 160 | 120 | 480 | 440 | 400 | 315 | 314 | 254 | 18 | 15 | 269 | 20 | - |
| NMS4 125/250C/A | 150 | 125 | 140 | 80 | 60 | 888 | 20 | 6 | - | 250 | 355 | 500 | 236 | 268 | 160 | 120 | 480 | 440 | 400 | 315 | 314 | 254 | 18 | 15 | 269 | 20 | - |
| NMS4 125/315A/A | 150 | 125 | 140 | 100 | 83 | 1063 | 27 | 6 | - | 280 | 355 | 580 | 249 | 278 | 200 | 150 | 540 | 455 | 500 | 400 | 401 | 318 | 22 | 19 | 334 | 25 | - |
| NMS4 125/315B/A | 150 | 125 | 140 | 100 | 70 | 1045 | 27 | 6 | - | 280 | 355 | 566 | 249 | 278 | 200 | 150 | 520 | 435 | 500 | 400 | 349 | 279 | 22 | 15 | 318 | 25 | - |
| NMS4 125/315C/A | 150 | 125 | 140 | 100 | 70 | 1012 | 27 | 6 | - | 280 | 355 | 550 | 249 | 278 | 200 | 150 | 520 | 435 | 500 | 400 | 349 | 279 | 22 | 15 | 318 | 25 | - |
| NMS4 125/400A/A | 150 | 125 | 140 | 100 | 100 | 1360 | 27 | - | 65 | 315 | 400 | 677 | 280 | 305 | 200 | 150 | 580 | 530 | 500 | 400 | 506 | 406 | 22 | 24 | 427 | 25 | - |
| NMS4 125/400B/A | 150 | 125 | 140 | 100 | 103 | 1128 | 27 | 8 | - | 315 | 400 | 645 | 280 | 305 | 200 | 150 | 540 | 461 | 500 | 400 | 459 | 356 | 22 | 19 | 409 | 25 | - |
| NMS4 125/400C/A | 150 | 125 | 140 | 100 | 103 | 1143 | 27 | 8 | - | 315 | 400 | 645 | 280 | 305 | 200 | 150 | 540 | 461 | 500 | 400 | 459 | 356 | 22 | 19 | 409 | 25 | - |
| NMS4 150/315S | 200 | 150 | 160 | 100 | 103 | 1148 | 27 | - | 55 | 280 | 400 | 610 | 256 | 307 | 200 | 150 | 540 | 490 | 550 | 450 | 459 | 356 | 22 | 19 | 384 | 25 | - |
| NMS4 150/315A/B | 200 | 150 | 160 | 100 | 103 | 1163 | 27 | - | 55 | 280 | 400 | 610 | 256 | 307 | 200 | 150 | 540 | 490 | 550 | 450 | 459 | 356 | 22 | 19 | 384 | 25 | - |
| NMS4 150/315B/B | 200 | 150 | 160 | 100 | 83 | 1083 | 27 | 6 | - | 280 | 400 | 580 | 256 | 307 | 200 | 150 | 540 | 455 | 550 | 450 | 401 | 318 | 22 | 19 | 334 | 25 | - |
| NMS4 150/315C/B | 200 | 150 | 160 | 100 | 70 | 1065 | 27 | 6 | - | 280 | 400 | 566 | 256 | 307 | 200 | 150 | 520 | 435 | 550 | 450 | 349 | 279 | 22 | 15 | 318 | 25 | - |
| NMS4 150/315D/B | 200 | 150 | 160 | 100 | 70 | 1032 | 27 | 6 | - | 280 | 400 | 550 | 256 | 307 | 200 | 150 | 520 | 435 | 550 | 450 | 349 | 279 | 22 | 15 | 318 | 25 | - |
| NMS4 150/400S | 200 | 150 | 160 | 100 | 100 | 1470 | 27 | - | 35 | 315 | 450 | 700 | 295 | 328 | 200 | 150 | 690 | 600 | 550 | 450 | 557 | 457 | 22 | 24 | 449 | 45 | - |
| NMS4 150/400A/B | 200 | 150 | 160 | 100 | 100 | 1420 | 27 | - | 35 | 315 | 450 | 705 | 295 | 328 | 200 | 150 | 690 | 600 | 550 | 450 | 557 | 457 | 22 | 24 | 449 | 45 | - |
| NMS4 150/400B/B | 200 | 150 | 160 | 100 | 100 | 1380 | 27 | - | 65 | 315 | 450 | 677 | 295 | 328 | 200 | 150 | 580 | 530 | 550 | 450 | 506 | 406 | 22 | 24 | 427 | 25 | - |

# NM4, NMS4

## Dimensions and weights with IE4 motor

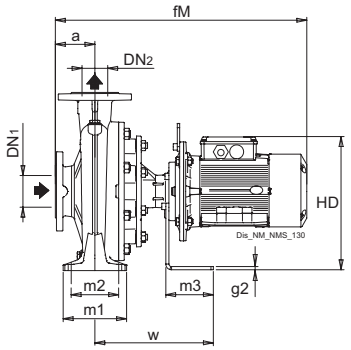


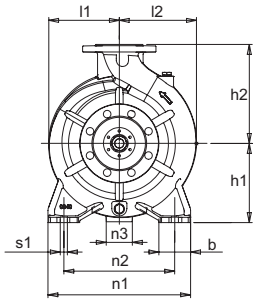


**Flanges EN 1092-2** PN 10-16

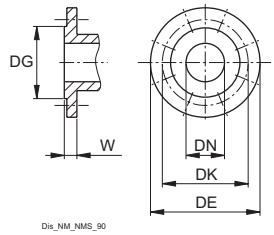


| mm | | | | | | |
|---|---|---|---|---|---|---|
| DN | DG | DK | DE | Holes N° | Holes ø | W |
| 32 | 76 | 100 | 140 | 4 | 19 | 18 |
| 40 | 84 | 110 | 150 | 4 | 19 | 18 |
| 50 | 99 | 125 | 165 | 4 | 19 | 20 |
| 65 | 118 | 145 | 185 | 4 | 19 | 20 |
| 80 | 132 | 160 | 200 | 8 | 19 | 22 |
| 100 | 156 | 180 | 220 | 8 | 19 | 24 |
| 125 | 184 | 210 | 250 | 8 | 19 | 24 |

| TYPE | | | mm | | | | | | | | | | | | | | | | | |
|---|---|---|---|---|---|---|---|---|---|---|---|---|---|---|---|---|---|---|---|---|
| | DN1 | DN2 | a | b | fM | g1 | g2 | h1 | h2 | HD | l1 | l2 | m1 | m2 | m3 | n1 | n2 | n3 | s1 | w |
| **NMS4 32/200A** | 50 | 32 | 80 | 50 | 639 | 12 | 8 | 160 | 180 | 295 | 140 | 140 | 100 | 70 | 120 | 240 | 190 | 65 | 14 | 274 |
| **NMS4 40/160A** | 65 | 40 | 80 | 50 | 639 | 10 | 8 | 132 | 160 | 267 | 120 | 122 | 100 | 70 | 120 | 240 | 190 | 65 | 14 | 274 |
| **NMS4 40/200B** | 65 | 40 | 100 | 50 | 655 | 12 | 8 | 160 | 180 | 303 | 141 | 141 | 100 | 70 | 120 | 265 | 212 | 65 | 14 | 274 |
| **NMS4 40/200A** | 65 | 40 | 100 | 50 | 655 | 12 | 8 | 160 | 180 | 303 | 141 | 141 | 100 | 70 | 120 | 265 | 212 | 65 | 14 | 274 |
| **NMS4 40/250C** | 65 | 40 | 100 | 65 | 715 | 15 | 8 | 180 | 225 | 323 | 177 | 177 | 125 | 95 | 120 | 320 | 250 | 65 | 14 | 274 |
| **NMS4 40/250B** | 65 | 40 | 100 | 65 | 711 | 15 | 8 | 180 | 225 | 336 | 177 | 177 | 125 | 95 | 120 | 320 | 250 | 65 | 14 | 274 |
| **NMS4 40/250A** | 65 | 40 | 100 | 65 | 711 | 15 | 8 | 180 | 225 | 336 | 177 | 177 | 125 | 95 | 120 | 320 | 250 | 65 | 14 | 274 |
| **NMS4 50/160B** | 65 | 50 | 100 | 50 | 655 | 12 | 8 | 160 | 180 | 303 | 125 | 140 | 100 | 70 | 120 | 265 | 212 | 65 | 14 | 274 |
| **NMS4 50/160A** | 65 | 50 | 100 | 50 | 655 | 12 | 8 | 160 | 180 | 303 | 125 | 140 | 100 | 70 | 120 | 265 | 212 | 65 | 14 | 274 |
| **NMS4 50/200C** | 65 | 50 | 100 | 50 | 655 | 14 | 8 | 160 | 200 | 303 | 142 | 152 | 100 | 70 | 120 | 265 | 212 | 65 | 14 | 274 |
| **NMS4 50/200B** | 65 | 50 | 100 | 50 | 715 | 14 | 8 | 160 | 200 | 303 | 142 | 152 | 100 | 70 | 120 | 265 | 212 | 65 | 14 | 274 |
| **NMS4 50/200A** | 65 | 50 | 100 | 50 | 711 | 14 | 8 | 160 | 200 | 316 | 142 | 152 | 100 | 70 | 120 | 265 | 212 | 65 | 14 | 274 |
| **NMS4 50/250D** | 65 | 50 | 100 | 65 | 711 | 15 | 8 | 180 | 225 | 336 | 177 | 177 | 125 | 95 | 120 | 320 | 250 | 65 | 14 | 274 |
| **NMS4 50/250C** | 65 | 50 | 100 | 65 | 711 | 15 | 8 | 180 | 225 | 336 | 177 | 177 | 125 | 95 | 120 | 320 | 250 | 65 | 14 | 274 |
| **NMS4 50/250B** | 65 | 50 | 100 | 65 | 711 | 15 | 8 | 180 | 225 | 336 | 177 | 177 | 125 | 95 | 120 | 320 | 250 | 65 | 14 | 274 |
| **NMS4 50/250A** | 65 | 50 | 100 | 65 | 637 | 15 | 8 | 180 | 225 | 354 | 177 | 177 | 125 | 95 | 120 | 320 | 250 | 65 | 14 | 274 |
| **NMS4 65/160C** | 80 | 65 | 100 | 65 | 655 | 12 | 8 | 160 | 200 | 303 | 140 | 161 | 125 | 95 | 120 | 280 | 212 | 65 | 14 | 274 |
| **NMS4 65/160B** | 80 | 65 | 100 | 65 | 655 | 12 | 8 | 160 | 200 | 303 | 140 | 161 | 125 | 95 | 120 | 280 | 212 | 65 | 14 | 274 |
| **NMS4 65/160A** | 80 | 65 | 100 | 65 | 715 | 12 | 8 | 160 | 200 | 303 | 140 | 161 | 125 | 95 | 120 | 280 | 212 | 65 | 14 | 274 |
| **NMS4 65/160S** | 80 | 65 | 100 | 65 | 711 | 12 | 8 | 160 | 200 | 316 | 140 | 161 | 125 | 95 | 120 | 280 | 212 | 65 | 14 | 274 |
| **NMS4 65/200B** | 80 | 65 | 100 | 65 | 711 | 12 | 8 | 180 | 225 | 336 | 159 | 179 | 125 | 95 | 120 | 320 | 250 | 65 | 14 | 274 |
| **NMS4 65/200A** | 80 | 65 | 100 | 65 | 711 | 12 | 8 | 180 | 225 | 336 | 159 | 179 | 125 | 95 | 120 | 320 | 250 | 65 | 14 | 274 |
| **NMS4 65/250B** | 80 | 65 | 100 | 80 | 662 | 15 | 8 | 200 | 250 | 374 | 178 | 195 | 160 | 120 | 120 | 360 | 280 | 65 | 18 | 299 |
| **NMS4 80/160C** | 100 | 80 | 125 | 65 | 680 | 12 | 8 | 180 | 225 | 323 | 152 | 181 | 125 | 95 | 120 | 320 | 250 | 65 | 14 | 274 |
| **NMS4 80/160B** | 100 | 80 | 125 | 65 | 740 | 12 | 8 | 180 | 225 | 323 | 152 | 181 | 125 | 95 | 120 | 320 | 250 | 65 | 14 | 274 |
| **NMS4 80/160A** | 100 | 80 | 125 | 65 | 736 | 12 | 8 | 180 | 225 | 336 | 152 | 181 | 125 | 95 | 120 | 320 | 250 | 65 | 14 | 274 |
| **NMS4 80/200C** | 100 | 80 | 125 | 65 | 761 | 15 | 8 | 180 | 250 | 336 | 170 | 194 | 125 | 95 | 120 | 345 | 280 | 65 | 14 | 299 |
| **NMS4 80/200B** | 100 | 80 | 125 | 65 | 761 | 15 | 8 | 180 | 250 | 336 | 170 | 194 | 125 | 95 | 120 | 345 | 280 | 65 | 14 | 299 |
| **NMS4 80/200A** | 100 | 80 | 125 | 65 | 687 | 15 | 8 | 180 | 250 | 354 | 170 | 194 | 125 | 95 | 120 | 345 | 280 | 65 | 14 | 299 |
| **NMS4 80/250C** | 100 | 80 | 125 | 80 | 687 | 20 | 8 | 200 | 280 | 374 | 191 | 211 | 160 | 120 | 120 | 400 | 315 | 65 | 18 | 299 |
| **NMS4 100/200C** | 125 | 100 | 125 | 80 | 761 | 15 | 8 | 200 | 280 | 356 | 179 | 211 | 160 | 120 | 120 | 360 | 280 | 65 | 18 | 299 |
| **NMS4 100/200B** | 125 | 100 | 125 | 80 | 687 | 15 | 8 | 200 | 280 | 374 | 179 | 211 | 160 | 120 | 120 | 360 | 280 | 65 | 18 | 299 |

# NM4, NMS4

## Dimensions and weights with IE4 motor

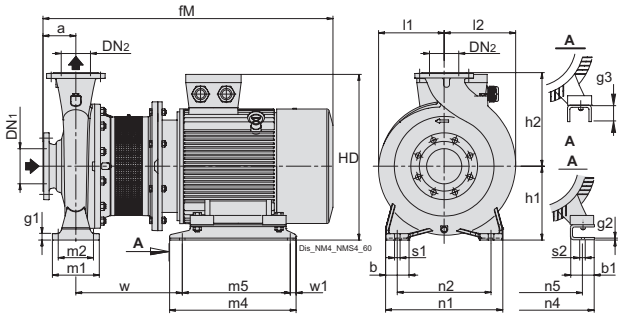


**Flanges EN 1092-2** PN 10-16 (DN 200 PN 10)

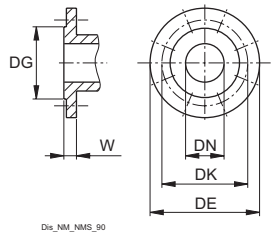


| mm | | | | | | |
|---|---|---|---|---|---|---|
| DN | DG | DK | DE | Holes N° | Holes ø | W |
| 32 | 76 | 100 | 140 | 4 | 19 | 18 |
| 40 | 84 | 110 | 150 | 4 | 19 | 18 |
| 50 | 99 | 125 | 165 | 4 | 19 | 20 |
| 65 | 118 | 145 | 185 | 4 | 19 | 20 |
| 80 | 132 | 160 | 200 | 8 | 19 | 22 |
| 100 | 156 | 180 | 220 | 8 | 19 | 24 |
| 125 | 184 | 210 | 250 | 8 | 19 | 24 |
| 150 | 211 | 240 | 285 | 8 | 23 | 26 |
| 200 | 266 | 295 | 340 | 8* | 23 | 30 |
| 250 | 319 | 355 | 405 | 12 | 28 | 26 |

| TYPE | | | mm | | | | | | | | | | | | | | | | | | | | | | | |
|---|---|---|---|---|---|---|---|---|---|---|---|---|---|---|---|---|---|---|---|---|---|---|---|---|---|---|
| | DN1 | DN2 | a | b | b1 | fM | g1 | g2 | g3 | h1 | h2 | HD | l1 | l2 | m1 | m2 | m4 | m5 | n1 | n2 | n4 | n5 | s1 | s2 | w | w1 |
| NMS4 65/250A | 80 | 65 | 100 | 80 | 69 | 708 | 15 | 6 | - | 200 | 250 | 392 | 178 | 195 | 160 | 120 | 298 | 258 | 360 | 280 | 285 | 216 | 18 | 12 | 281 | 20 |
| NMS4 65/315B | 80 | 65 | 125 | 80 | 69 | 770 | 20 | 6 | - | 225 | 280 | 419 | 223 | 223 | 160 | 120 | 298 | 258 | 400 | 315 | 285 | 216 | 18 | 12 | 300 | 20 |
| NMS4 65/315C | 80 | 65 | 125 | 80 | 69 | 733 | 20 | 6 | - | 225 | 280 | 417 | 223 | 223 | 160 | 120 | 298 | 258 | 400 | 315 | 285 | 216 | 18 | 12 | 281 | 20 |
| NMS4 80/250A | 100 | 80 | 125 | 80 | 69 | 770 | 20 | 6 | - | 200 | 280 | 394 | 191 | 211 | 160 | 120 | 298 | 258 | 400 | 315 | 285 | 216 | 18 | 12 | 300 | 20 |
| NMS4 80/250B | 100 | 80 | 125 | 80 | 69 | 733 | 20 | 6 | - | 200 | 280 | 392 | 191 | 211 | 160 | 120 | 298 | 258 | 400 | 315 | 285 | 216 | 18 | 12 | 281 | 20 |
| NMS4 100/200A | 125 | 100 | 125 | 80 | 69 | 733 | 15 | 6 | - | 200 | 280 | 392 | 179 | 211 | 160 | 120 | 298 | 258 | 360 | 280 | 285 | 216 | 18 | 12 | 281 | 20 |
| NMS4 100/250B | 125 | 100 | 140 | 80 | 69 | 785 | 20 | 6 | - | 225 | 280 | 419 | 205 | 233 | 160 | 120 | 298 | 258 | 400 | 315 | 285 | 216 | 18 | 12 | 300 | 20 |
| NMS4 125/250D | 150 | 125 | 140 | 80 | 69 | 785 | 20 | 6 | - | 250 | 355 | 419 | 236 | 268 | 160 | 120 | 298 | 258 | 400 | 315 | 285 | 216 | 18 | 12 | 300 | 20 |
| NMS4 125/250E | 150 | 125 | 140 | 80 | 69 | 748 | 20 | 6 | - | 250 | 355 | 417 | 236 | 268 | 160 | 120 | 298 | 258 | 400 | 315 | 285 | 216 | 18 | 12 | 281 | 20 |
| NMS4 65/315A | 80 | 65 | 125 | 80 | 85 | 883 | 20 | - | 65 | 225 | 280 | 478 | 223 | 223 | 160 | 120 | 394 | 354 | 400 | 315 | 339 | 254 | 18 | 14 | 343 | 20 |
| NMS4 80/315S | 100 | 80 | 125 | 80 | 70 | 952 | 20 | 6 | - | 250 | 315 | 520 | 222 | 234 | 160 | 120 | 432 | 382 | 400 | 315 | 349 | 279 | 18 | 15 | 312 | 25 |
| NMS4 80/315A | 100 | 80 | 125 | 80 | 60 | 927 | 20 | 6 | - | 250 | 315 | 503 | 222 | 234 | 160 | 120 | 480 | 440 | 400 | 315 | 314 | 254 | 18 | 15 | 281 | 20 |
| NMS4 80/315B/A | 100 | 80 | 125 | 80 | 60 | 883 | 20 | 6 | - | 250 | 315 | 503 | 222 | 234 | 160 | 120 | 480 | 440 | 400 | 315 | 314 | 254 | 18 | 15 | 281 | 20 |
| NMS4 80/315C | 100 | 80 | 125 | 80 | 60 | 883 | 20 | 6 | - | 250 | 315 | 503 | 222 | 234 | 160 | 120 | 480 | 440 | 400 | 315 | 314 | 254 | 18 | 15 | 281 | 20 |
| NMS4 80/400S | 125 | 80 | 125 | 80 | 103 | 1119 | 15 | - | 55 | 280 | 355 | 603 | 267 | 269 | 160 | 120 | 540 | 490 | 435 | 355 | 459 | 356 | 18 | 19 | 379 | 25 |
| NMS4 80/400A/B | 125 | 80 | 125 | 80 | 83 | 1043 | 15 | 6 | - | 280 | 355 | 580 | 267 | 269 | 160 | 120 | 540 | 455 | 435 | 355 | 401 | 318 | 18 | 19 | 334 | 25 |
| NMS4 80/400B/B | 125 | 80 | 125 | 80 | 70 | 1015 | 15 | 6 | - | 280 | 355 | 551 | 267 | 269 | 160 | 120 | 520 | 435 | 435 | 355 | 349 | 279 | 18 | 15 | 318 | 25 |
| NMS4 80/400C/B | 125 | 80 | 125 | 80 | 70 | 957 | 15 | 6 | - | 280 | 355 | 550 | 267 | 269 | 160 | 120 | 520 | 435 | 435 | 355 | 349 | 279 | 18 | 15 | 318 | 25 |
| NMS4 100/250A/A | 125 | 100 | 140 | 80 | 85 | 886 | 20 | - | 65 | 225 | 280 | 478 | 205 | 233 | 160 | 120 | 394 | 354 | 400 | 315 | 339 | 254 | 18 | 14 | 331 | 20 |
| NMS4 100/315A/A | 125 | 100 | 140 | 80 | 70 | 967 | 20 | 6 | - | 250 | 315 | 520 | 229 | 251 | 160 | 120 | 432 | 382 | 400 | 315 | 349 | 279 | 18 | 15 | 312 | 25 |
| NMS4 100/315B/A | 125 | 100 | 140 | 80 | 60 | 942 | 20 | 6 | - | 250 | 315 | 503 | 229 | 251 | 160 | 120 | 480 | 440 | 400 | 315 | 314 | 254 | 18 | 15 | 281 | 20 |
| NMS4 100/315C/A | 125 | 100 | 140 | 80 | 60 | 898 | 20 | 6 | - | 250 | 315 | 503 | 229 | 251 | 160 | 120 | 480 | 440 | 400 | 315 | 314 | 254 | 18 | 15 | 281 | 20 |
| NMS4 100/400A/A | 125 | 100 | 140 | 100 | 103 | 1139 | 27 | - | 55 | 280 | 355 | 603 | 268 | 280 | 200 | 150 | 540 | 490 | 500 | 400 | 459 | 356 | 22 | 19 | 384 | 25 |
| NMS4 100/400B/A | 125 | 100 | 140 | 100 | 83 | 1058 | 27 | 6 | - | 280 | 355 | 580 | 268 | 280 | 200 | 150 | 540 | 455 | 500 | 400 | 401 | 318 | 22 | 19 | 334 | 25 |
| NMS4 100/400C/A | 125 | 100 | 140 | 100 | 70 | 1030 | 27 | 6 | - | 280 | 355 | 551 | 268 | 280 | 200 | 150 | 520 | 435 | 500 | 400 | 349 | 279 | 22 | 15 | 318 | 25 |
| NMS4 125/250A/A | 150 | 125 | 140 | 80 | 60 | 930 | 20 | 6 | - | 250 | 355 | 503 | 236 | 268 | 160 | 120 | 480 | 440 | 400 | 315 | 314 | 254 | 18 | 15 | 269 | 20 |
| NMS4 125/250B/A | 150 | 125 | 140 | 80 | 60 | 886 | 20 | 6 | - | 250 | 355 | 503 | 236 | 268 | 160 | 120 | 480 | 440 | 400 | 315 | 314 | 254 | 18 | 15 | 269 | 20 |
| NMS4 125/250C/A | 150 | 125 | 140 | 80 | 60 | 886 | 20 | 6 | - | 250 | 355 | 503 | 236 | 268 | 160 | 120 | 480 | 440 | 400 | 315 | 314 | 254 | 18 | 15 | 269 | 20 |
| NMS4 125/315A/A | 150 | 125 | 140 | 100 | 83 | 1058 | 27 | 6 | - | 280 | 355 | 580 | 249 | 278 | 200 | 150 | 540 | 455 | 500 | 400 | 401 | 318 | 22 | 19 | 334 | 25 |
| NMS4 125/315B/A | 150 | 125 | 140 | 100 | 70 | 1030 | 27 | 6 | - | 280 | 355 | 551 | 249 | 278 | 200 | 150 | 520 | 435 | 500 | 400 | 349 | 279 | 22 | 15 | 318 | 25 |
| NMS4 125/315C/A | 150 | 125 | 140 | 100 | 70 | 972 | 27 | 6 | - | 280 | 355 | 550 | 249 | 278 | 200 | 150 | 520 | 435 | 500 | 400 | 349 | 279 | 22 | 15 | 318 | 25 |
| NMS4 125/400A/A | 150 | 125 | 140 | 100 | 100 | 1226 | 27 | - | 65 | 315 | 400 | 677 | 280 | 305 | 200 | 150 | 580 | 530 | 500 | 400 | 506 | 406 | 22 | 24 | 427 | 25 |
| NMS4 125/400B/A | 150 | 125 | 140 | 100 | 103 | 1194 | 27 | 8 | - | 315 | 400 | 638 | 280 | 305 | 200 | 150 | 540 | 461 | 500 | 400 | 459 | 356 | 22 | 19 | 409 | 25 |
| NMS4 125/400C/A | 150 | 125 | 140 | 100 | 103 | 1139 | 27 | 8 | - | 315 | 400 | 638 | 280 | 305 | 200 | 150 | 540 | 461 | 500 | 400 | 459 | 356 | 22 | 19 | 409 | 25 |
| NMS4 150/315S | 200 | 150 | 160 | 100 | 103 | 1214 | 27 | - | 55 | 280 | 400 | 603 | 256 | 307 | 200 | 150 | 540 | 490 | 550 | 450 | 459 | 356 | 22 | 19 | 384 | 25 |
| NMS4 150/315A/B | 200 | 150 | 160 | 100 | 103 | 1159 | 27 | - | 55 | 280 | 400 | 603 | 256 | 307 | 200 | 150 | 540 | 490 | 550 | 450 | 459 | 356 | 22 | 19 | 384 | 25 |
| NMS4 150/315B/B | 200 | 150 | 160 | 100 | 83 | 1078 | 27 | 6 | - | 280 | 400 | 580 | 256 | 307 | 200 | 150 | 540 | 455 | 550 | 450 | 401 | 318 | 22 | 19 | 334 | 25 |
| NMS4 150/315C/B | 200 | 150 | 160 | 100 | 70 | 1050 | 27 | 6 | - | 280 | 400 | 551 | 256 | 307 | 200 | 150 | 520 | 435 | 550 | 450 | 349 | 279 | 22 | 15 | 318 | 25 |
| NMS4 150/315D/B | 200 | 150 | 160 | 100 | 70 | 992 | 27 | 6 | - | 280 | 400 | 550 | 256 | 307 | 200 | 150 | 520 | 435 | 550 | 450 | 349 | 279 | 22 | 15 | 318 | 25 |
| NMS4 150/400S | 200 | 150 | 160 | 100 | 100 | 1438 | 27 | - | 35 | 315 | 450 | 704 | 295 | 328 | 200 | 150 | 690 | 600 | 550 | 450 | 557 | 457 | 22 | 24 | 449 | 45 |
| NMS4 150/400A/B | 200 | 150 | 160 | 100 | 100 | 1383 | 27 | - | 35 | 315 | 450 | 704 | 295 | 328 | 200 | 150 | 690 | 600 | 550 | 450 | 557 | 457 | 22 | 24 | 449 | 45 |
| NMS4 150/400B/B | 200 | 150 | 160 | 100 | 100 | 1246 | 27 | - | 65 | 315 | 450 | 677 | 295 | 328 | 200 | 150 | 580 | 530 | 550 | 450 | 506 | 406 | 22 | 24 | 427 | 25 |

# NM4, NMS4

## Dimensions and weights

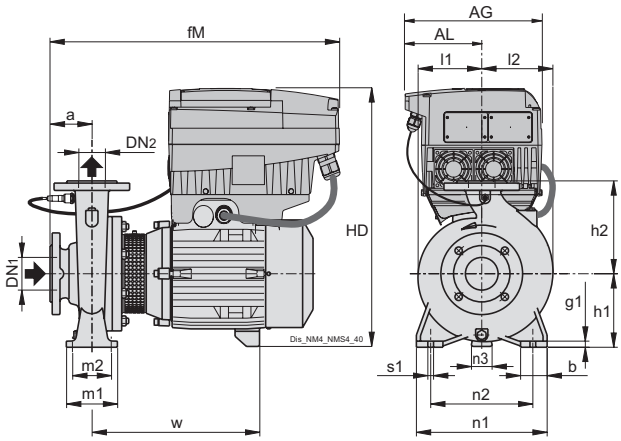


**Flanges EN 1092-2** PN 10-16

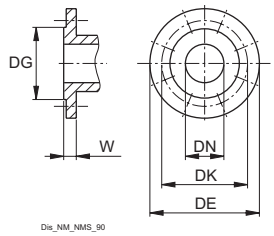


| mm | | | | | | |
|---|---|---|---|---|---|---|
| DN | DG | DK | DE | Holes N° | Holes ø | W |
| 32 | 76 | 100 | 140 | 4 | 19 | 18 |
| 40 | 84 | 110 | 150 | 4 | 19 | 18 |
| 50 | 99 | 125 | 165 | 4 | 19 | 20 |
| 65 | 118 | 145 | 185 | 4 | 19 | 20 |
| 80 | 132 | 160 | 200 | 8 | 19 | 22 |
| 100 | 156 | 180 | 220 | 8 | 19 | 24 |
| 125 | 184 | 210 | 250 | 8 | 19 | 24 |
| 150 | 211 | 240 | 285 | 8 | 23 | 26 |

| TYPE | | | mm | | | | | | | | | | | | | | | | | | kg |
|---|---|---|---|---|---|---|---|---|---|---|---|---|---|---|---|---|---|---|---|---|---|
| | DN1 | DN2 | a | AG | AL | b | fM | g1 | h1 | h2 | HD | l1 | l2 | m1 | m2 | n1 | n2 | n3 | s1 | w | Weight |
| NM4 EI 32/16BE | 50 | 32 | 80 | 190 | 105 | 50 | 440 | 12 | 132 | 160 | 260 | 120 | 120 | 100 | 70 | 240 | 190 | 47 | 14 | 255 | - |
| NM4 EI 32/16AE | 50 | 32 | 80 | 190 | 105 | 50 | 440 | 12 | 132 | 160 | 260 | 120 | 120 | 100 | 70 | 240 | 190 | 47 | 14 | 255 | - |
| NM4 EI 32/20BE | 50 | 32 | 80 | 190 | 105 | 50 | 440 | 12 | 160 | 180 | 288 | 140 | 140 | 100 | 70 | 240 | 190 | 62 | 14 | 255 | - |
| NM4 EI 32/20A/B | 50 | 32 | 80 | 190 | 105 | 50 | 453 | 12 | 160 | 180 | 445 | 140 | 140 | 100 | 70 | 240 | 190 | 40 | 14 | 297 | 47.9 |
| NM4 EI 40/16C/B | 65 | 40 | 80 | 190 | 105 | 50 | 413 | 10 | 132 | 160 | 417 | 120 | 122 | 100 | 70 | 240 | 190 | 35 | 14 | 255 | - |
| NM4 EI 40/16B/B | 65 | 40 | 80 | 190 | 105 | 50 | 413 | 10 | 132 | 160 | 417 | 120 | 122 | 100 | 70 | 240 | 190 | 35 | 14 | 255 | - |
| NM4 EI 40/16A/C | 65 | 40 | 80 | 190 | 105 | 50 | 453 | 10 | 132 | 160 | 417 | 120 | 122 | 100 | 70 | 240 | 190 | 35 | 14 | 295 | 43.8 |
| NM4 EI 40/20B/B | 65 | 40 | 100 | 190 | 105 | 50 | 499 | 12 | 160 | 180 | 455 | 141 | 141 | 100 | 70 | 265 | 212 | 37 | 14 | 297 | 55.5 |
| NM4 EI 40/20A/B | 65 | 40 | 100 | 190 | 105 | 50 | 499 | 12 | 160 | 180 | 455 | 141 | 141 | 100 | 70 | 265 | 212 | 37 | 14 | 297 | - |
| NM4 EI 40/25C/C | 65 | 40 | 100 | 190 | 105 | 65 | 499 | 15 | 180 | 225 | 475 | 177 | 177 | 125 | 95 | 320 | 250 | 41 | 14 | 299 | - |
| NM4 EI 40/25B/C | 65 | 40 | 100 | 210 | 118 | 65 | 559 | 15 | 180 | 225 | 504 | 177 | 177 | 125 | 95 | 320 | 250 | 37 | 14 | 337 | - |
| NM4 EI 40/25A/B | 65 | 40 | 100 | 210 | 118 | 65 | 559 | 15 | 180 | 225 | 504 | 177 | 177 | 125 | 95 | 320 | 250 | 37 | 14 | 337 | - |
| NM4 EI 50/16B/C | 65 | 50 | 100 | 190 | 105 | 50 | 499 | 12 | 160 | 180 | 455 | 125 | 140 | 100 | 70 | 265 | 212 | 37 | 14 | 297 | - |
| NM4 EI 50/16A/C | 65 | 50 | 100 | 190 | 105 | 50 | 499 | 12 | 160 | 180 | 455 | 125 | 140 | 100 | 70 | 265 | 212 | 37 | 14 | 297 | 52.4 |
| NM4 EI 50/20C/C | 65 | 50 | 100 | 190 | 105 | 50 | 509 | 14 | 160 | 200 | 455 | 142 | 152 | 100 | 70 | 265 | 212 | 37 | 14 | 307 | 59 |
| NM4 EI 50/20B/C | 65 | 50 | 100 | 190 | 105 | 50 | 509 | 14 | 160 | 200 | 455 | 142 | 152 | 100 | 70 | 265 | 212 | 37 | 14 | 307 | - |
| NM4 EI 50/20A/C | 65 | 50 | 100 | 210 | 118 | 50 | 559 | 14 | 160 | 200 | 484 | 142 | 152 | 100 | 70 | 265 | 212 | 34 | 14 | 335 | - |
| NM4 EI 50/25D/B | 65 | 50 | 100 | 210 | 118 | 65 | 559 | 15 | 180 | 225 | 504 | 177 | 177 | 125 | 95 | 320 | 250 | 37 | 14 | 337 | - |
| NM4 EI 50/25C/C | 65 | 50 | 100 | 210 | 118 | 65 | 559 | 15 | 180 | 225 | 504 | 177 | 177 | 125 | 95 | 320 | 250 | 37 | 14 | 337 | - |
| NM4 EI 50/25B/B | 65 | 50 | 100 | 210 | 118 | 65 | 559 | 15 | 180 | 225 | 504 | 177 | 177 | 125 | 95 | 320 | 250 | 37 | 14 | 337 | - |
| NM4 EI 50/25A/B | 65 | 50 | 100 | 210 | 118 | 65 | 559 | 15 | 180 | 225 | 504 | 177 | 177 | 125 | 95 | 320 | 250 | 37 | 14 | 337 | - |
| NM4 EI 65/16C/C | 80 | 65 | 100 | 190 | 105 | 65 | 499 | 12 | 160 | 200 | 455 | 140 | 161 | 125 | 95 | 280 | 212 | 37 | 14 | 297 | 54.6 |
| NM4 EI 65/16B/C | 80 | 65 | 100 | 190 | 105 | 65 | 499 | 12 | 160 | 200 | 455 | 140 | 161 | 125 | 95 | 280 | 212 | 37 | 14 | 297 | - |
| NM4 EI 65/16A/C | 80 | 65 | 100 | 190 | 105 | 65 | 499 | 12 | 160 | 200 | 455 | 140 | 161 | 125 | 95 | 280 | 212 | 37 | 14 | 297 | 57.9 |
| NM4 EI 65/16S/A | 80 | 65 | 100 | 210 | 118 | 65 | 559 | 12 | 160 | 200 | 484 | 140 | 161 | 125 | 95 | 280 | 212 | 34 | 14 | 335 | - |
| NM4 EI 65/20B/C | 80 | 65 | 100 | 210 | 118 | 65 | 559 | 12 | 180 | 225 | 504 | 159 | 179 | 125 | 95 | 320 | 250 | 37 | 14 | 337 | - |
| NM4 EI 65/20A/B | 80 | 65 | 100 | 210 | 118 | 65 | 559 | 12 | 180 | 225 | 504 | 159 | 179 | 125 | 95 | 320 | 250 | 37 | 14 | 337 | - |
| NM4 EI 65/25B/B | 80 | 65 | 100 | 210 | 118 | 80 | 574 | 15 | 200 | 250 | 524 | 178 | 195 | 160 | 120 | 360 | 280 | 41 | 18 | 354 | - |
| NM4 EI 65/25A/C | 80 | 65 | 100 | 281 | 154 | 80 | 644 | 15 | 200 | 250 | 589 | 178 | 195 | 160 | 120 | 360 | 280 | 38 | 18 | 403 | - |
| NM4 EI 65/31C/B | 80 | 65 | 125 | 281 | 154 | 80 | 669 | 20 | 225 | 280 | 614 | 223 | 223 | 160 | 120 | 400 | 315 | 43 | 18 | 406 | - |
| NM4 EI 65/31B/B | 80 | 65 | 125 | 281 | 154 | 80 | 669 | 20 | 225 | 280 | 614 | 223 | 223 | 160 | 120 | 400 | 315 | 43 | 18 | 406 | - |
| NM4 EI 65/31A/B | 80 | 65 | 125 | 281 | 154 | 80 | 744 | 20 | 225 | 280 | 614 | 223 | 223 | 160 | 120 | 400 | 315 | 43 | 18 | 481 | - |
| NM4 EI 80/16C/C | 100 | 80 | 125 | 190 | 105 | 65 | 524 | 12 | 180 | 225 | 475 | 152 | 181 | 125 | 95 | 320 | 250 | 41 | 14 | 299 | - |
| NM4 EI 80/16B/C | 100 | 80 | 125 | 190 | 105 | 65 | 524 | 12 | 180 | 225 | 475 | 152 | 181 | 125 | 95 | 320 | 250 | 41 | 14 | 299 | 65 |
| NM4 EI 80/16A/C | 100 | 80 | 125 | 210 | 118 | 65 | 584 | 12 | 180 | 225 | 504 | 152 | 181 | 125 | 95 | 320 | 250 | 37 | 14 | 337 | - |
| NM4 EI 80/20C/C | 100 | 80 | 125 | 210 | 118 | 65 | 594 | 15 | 180 | 250 | 504 | 170 | 194 | 125 | 95 | 345 | 280 | 37 | 14 | 347 | - |
| NM4 EI 80/20B/B | 100 | 80 | 125 | 210 | 118 | 65 | 594 | 15 | 180 | 250 | 504 | 170 | 194 | 125 | 95 | 345 | 280 | 37 | 14 | 347 | 86.5 |
| NM4 EI 80/20A/B | 100 | 80 | 125 | 210 | 118 | 65 | 594 | 15 | 180 | 250 | 504 | 170 | 194 | 125 | 95 | 345 | 280 | 37 | 14 | 347 | - |
| NM4 EI 80/25C/A | 100 | 80 | 125 | 210 | 118 | 80 | 599 | 20 | 200 | 280 | 524 | 191 | 211 | 160 | 120 | 400 | 315 | 41 | 18 | 354 | 111.5 |
| NM4 EI 80/25B/B | 100 | 80 | 125 | 281 | 154 | 80 | 669 | 20 | 200 | 280 | 589 | 191 | 211 | 160 | 120 | 400 | 315 | 38 | 18 | 403 | 136.6 |
| NM4 EI 80/25A/B | 100 | 80 | 125 | 281 | 154 | 80 | 669 | 20 | 200 | 280 | 589 | 191 | 211 | 160 | 120 | 400 | 315 | 38 | 18 | 403 | 145.5 |
| NM4 EI 80/31C/B | 100 | 80 | 125 | 281 | 154 | 80 | 744 | 20 | 250 | 315 | 639 | 222 | 234 | 160 | 120 | 400 | 315 | 47 | 18 | 483 | - |
| NM4 EI 100/20C/A | 125 | 100 | 125 | 210 | 118 | 80 | 594 | 15 | 200 | 280 | 524 | 179 | 211 | 160 | 120 | 360 | 280 | 41 | 18 | 349 | - |
| NM4 EI 100/20B/A | 125 | 100 | 125 | 210 | 118 | 80 | 594 | 15 | 200 | 280 | 524 | 179 | 211 | 160 | 120 | 360 | 280 | 41 | 18 | 349 | - |
| NM4 EI 100/20A/C | 125 | 100 | 125 | 281 | 154 | 80 | 669 | 15 | 200 | 280 | 589 | 179 | 211 | 160 | 120 | 360 | 280 | 38 | 18 | 403 | - |
| NM4 EI 100/25B/B | 125 | 100 | 140 | 281 | 154 | 80 | 684 | 20 | 225 | 280 | 614 | 205 | 233 | 160 | 120 | 400 | 315 | 43 | 18 | 406 | - |
| NM4 EI 100/25A/B | 125 | 100 | 140 | 281 | 154 | 80 | 759 | 20 | 225 | 280 | 614 | 205 | 233 | 160 | 120 | 400 | 315 | 43 | 18 | 481 | 166.3 |
| NM4 EI 125/25E/B | 150 | 125 | 140 | 281 | 154 | 80 | 684 | 20 | 250 | 355 | 639 | 236 | 268 | 160 | 120 | 400 | 315 | 47 | 18 | 408 | - |
| NM4 EI 125/25D/B | 150 | 125 | 140 | 281 | 154 | 80 | 684 | 20 | 250 | 355 | 639 | 236 | 268 | 160 | 120 | 400 | 315 | 47 | 18 | 408 | - |
| NM4 EI 125/25C/B | 150 | 125 | 140 | 281 | 154 | 80 | 759 | 20 | 250 | 355 | 639 | 236 | 268 | 160 | 120 | 400 | 315 | 47 | 18 | 483 | - |

# NM4, NMS4

## Dimensions and weights

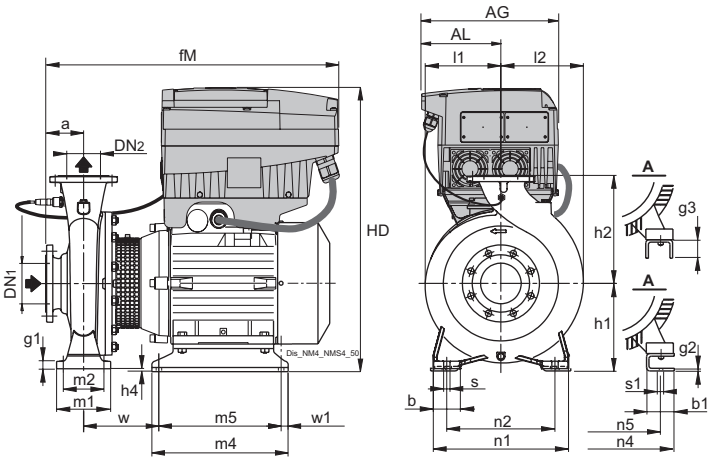


**Flanges EN 1092-2** PN 10-16

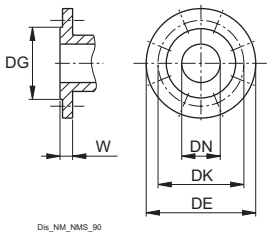


| mm | | | | | | |
|---|---|---|---|---|---|---|
| DN | DG | DK | DE | Holes N° | Holes ø | W |
| 32 | 76 | 100 | 140 | 4 | 19 | 18 |
| 40 | 84 | 110 | 150 | 4 | 19 | 18 |
| 50 | 99 | 125 | 165 | 4 | 19 | 20 |
| 65 | 118 | 145 | 185 | 4 | 19 | 20 |
| 80 | 132 | 160 | 200 | 8 | 19 | 22 |
| 100 | 156 | 180 | 220 | 8 | 19 | 24 |
| 125 | 184 | 210 | 250 | 8 | 19 | 24 |
| 150 | 211 | 240 | 285 | 8 | 23 | 26 |

| TYPE | | | mm | | | | | | | | | | | | | | | | | | | | | | |
|---|---|---|---|---|---|---|---|---|---|---|---|---|---|---|---|---|---|---|---|---|---|---|---|---|---|
| | DN1 | DN2 | a | AG | AL | b | b1 | fM | g2 | h1 | h2 | h4 | HD | l1 | l2 | m1 | m2 | m4 | m5 | n1 | n2 | n5 | s1 | s2 | w | w1 |
| **NM4 EI 80/31B** | 100 | 80 | 125 | 281 | 153.5 | 80 | 74 | 790 | 6 | 250 | 315 | 10 | 657 | 222 | 234 | 160 | 120 | 435 | 395 | 400 | 315 | 254 | 18 | 14 | 323 | 20 |
| **NM4 EI 80/31A** | 100 | 80 | 125 | 350 | 190 | 80 | 74 | 790 | 6 | 250 | 315 | 10 | 738 | 222 | 234 | 160 | 120 | 435 | 395 | 400 | 315 | 254 | 18 | 14 | 323 | 20 |
| **NM4 EI 100/31C** | 125 | 100 | 140 | 281 | 153.5 | 80 | 74 | 805 | 6 | 250 | 315 | 10 | 657 | 229 | 251 | 160 | 120 | 435 | 395 | 400 | 315 | 254 | 18 | 14 | 323 | 20 |
| **NM4 EI 100/31B** | 125 | 100 | 140 | 350 | 190 | 80 | 74 | 805 | 6 | 250 | 315 | 10 | 738 | 229 | 251 | 160 | 120 | 435 | 395 | 400 | 315 | 254 | 18 | 14 | 323 | 20 |
| **NM4 EI 125/25B** | 150 | 125 | 140 | 281 | 153.5 | 80 | 74 | 805 | 6 | 250 | 355 | 10 | 657 | 236 | 268 | 160 | 120 | 435 | 395 | 400 | 315 | 254 | 18 | 14 | 323 | 20 |
| **NM4 EI 125/25A** | 150 | 125 | 140 | 350 | 190 | 80 | 74 | 805 | 6 | 250 | 355 | 10 | 738 | 236 | 268 | 160 | 120 | 435 | 395 | 400 | 315 | 254 | 18 | 14 | 323 | 20 |

# NM4, NMS4

## Dimensions and weights

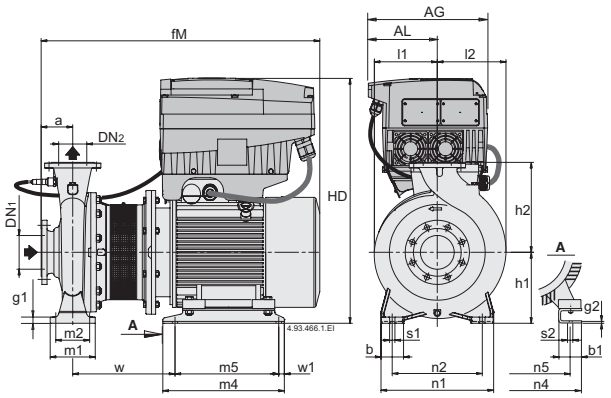


**Flanges EN 1092-2** PN 10-16 (DN 200 PN 10)

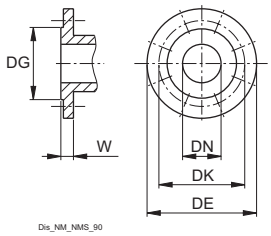


| mm | | | | | | |
|---|---|---|---|---|---|---|
| DN | DG | DK | DE | Holes N° | Holes ø | W |
| 32 | 76 | 100 | 140 | 4 | 19 | 18 |
| 40 | 84 | 110 | 150 | 4 | 19 | 18 |
| 50 | 99 | 125 | 165 | 4 | 19 | 20 |
| 65 | 118 | 145 | 185 | 4 | 19 | 20 |
| 80 | 132 | 160 | 200 | 8 | 19 | 22 |
| 100 | 156 | 180 | 220 | 8 | 19 | 24 |
| 125 | 184 | 210 | 250 | 8 | 19 | 24 |
| 150 | 211 | 240 | 285 | 8 | 23 | 26 |
| 200 | 266 | 295 | 340 | 8* | 23 | 30 |
| 250 | 319 | 355 | 405 | 12 | 28 | 26 |

| TYPE | | | mm | | | | | | | | | | | | | | | | | | | | | | | | | kg |
|---|---|---|---|---|---|---|---|---|---|---|---|---|---|---|---|---|---|---|---|---|---|---|---|---|---|---|---|---|
| | DN1 | DN2 | a | AG | AL | b | b1 | fM | g1 | g2 | h1 | h2 | HD | l1 | l2 | m1 | m2 | m4 | m5 | n1 | n2 | n4 | n5 | s1 | s2 | w | w1 | Weight |
| **NMS4 EI 80/315S** | 100 | 80 | 125 | 350 | 190 | 80 | 70 | 999 | 17 | 6 | 250 | 315 | 789 | 222 | 234 | 160 | 120 | 432 | 382 | 400 | 315 | 338 | 279 | 18 | 15 | 312 | 25 | - |
| **NMS4 EI 80/400C/B** | 100 | 80 | 125 | 350 | 190 | 80 | 70 | 1004 | 15 | 6 | 280 | 355 | 819 | 267 | 269 | 160 | 120 | 520 | 435 | 435 | 355 | 338 | 279 | 18 | 15 | 318 | 25 | - |
| **NMS4 EI 80/400B/B** | 100 | 80 | 125 | 350 | 190 | 80 | 70 | 1004 | 15 | 6 | 280 | 355 | 819 | 267 | 269 | 160 | 120 | 520 | 435 | 435 | 355 | 338 | 279 | 18 | 15 | 318 | 25 | - |
| **NMS4 EI 80/400A/B** | 100 | 80 | 125 | 350 | 190 | 80 | 83 | 1051 | 15 | 6 | 280 | 355 | 863 | 267 | 269 | 160 | 120 | 540 | 455 | 435 | 355 | 388 | 318 | 18 | 19 | 334 | 25 | - |
| **NMS4 EI 100/315A/A** | 125 | 100 | 140 | 350 | 190 | 80 | 70 | 1014 | 20 | 6 | 250 | 315 | 789 | 229 | 251 | 160 | 120 | 432 | 382 | 400 | 315 | 338 | 279 | 18 | 15 | 312 | 25 | - |
| **NMS4 EI 100/400C/A** | 125 | 100 | 140 | 350 | 190 | 100 | 70 | 1019 | 27 | 6 | 280 | 355 | 819 | 268 | 280 | 200 | 150 | 520 | 435 | 500 | 400 | 338 | 279 | 22 | 15 | 318 | 25 | - |
| **NMS4 EI 100/400B/A** | 125 | 100 | 140 | 350 | 190 | 100 | 83 | 1066 | 27 | 6 | 280 | 355 | 863 | 268 | 280 | 200 | 150 | 540 | 455 | 500 | 400 | 388 | 318 | 22 | 19 | 334 | 25 | 445 |
| **NMS4 EI 125/315C/A** | 150 | 125 | 140 | 350 | 190 | 100 | 70 | 1019 | 27 | 6 | 280 | 355 | 819 | 249 | 278 | 200 | 150 | 520 | 435 | 500 | 400 | 338 | 279 | 22 | 15 | 318 | 25 | - |
| **NMS4 EI 125/315B/A** | 150 | 125 | 140 | 350 | 190 | 100 | 70 | 1019 | 27 | 6 | 280 | 355 | 819 | 249 | 278 | 200 | 150 | 520 | 435 | 500 | 400 | 338 | 279 | 22 | 15 | 318 | 25 | - |
| **NMS4 EI 125/315A/A** | 150 | 125 | 140 | 350 | 190 | 100 | 83 | 1066 | 27 | 6 | 280 | 355 | 863 | 249 | 278 | 200 | 150 | 540 | 455 | 500 | 400 | 388 | 318 | 22 | 19 | 334 | 25 | - |
| **NMS4 EI 150/315B/B** | 200 | 150 | 160 | 350 | 190 | 100 | 83 | 1086 | 27 | 6 | 280 | 400 | 863 | 104 | 119 | 200 | 150 | 540 | 455 | 550 | 450 | 388 | 318 | 22 | 19 | 334 | 25 | - |

# NM4, NMS4

## Dimensions and weights

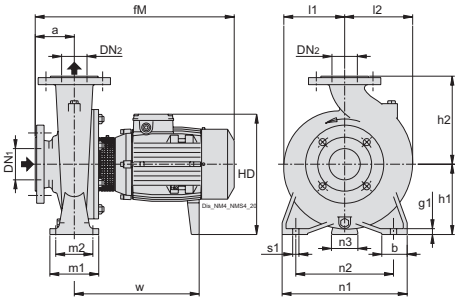


**Flanges EN 1092-2** PN 10-16

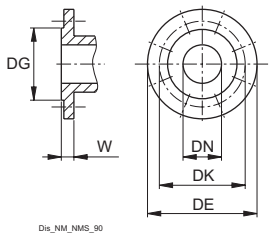


| mm | | | | | | |
|---|---|---|---|---|---|---|
| DN | DG | DK | DE | Holes N° | Holes ø | W |
| 32 | 76 | 100 | 140 | 4 | 19 | 18 |
| 40 | 84 | 110 | 150 | 4 | 19 | 18 |
| 50 | 99 | 125 | 165 | 4 | 19 | 20 |
| 65 | 118 | 145 | 185 | 4 | 19 | 20 |
| 80 | 132 | 160 | 200 | 8 | 19 | 22 |
| 100 | 156 | 180 | 220 | 8 | 19 | 24 |
| 125 | 184 | 210 | 250 | 8 | 19 | 24 |

| TYPE | | | mm | | | | | | | | | | | | | | | | kg |
|---|---|---|---|---|---|---|---|---|---|---|---|---|---|---|---|---|---|---|---|
| | DN1 | DN2 | a | b | fM | g1 | h1 | h2 | HD | l1 | l2 | m1 | m2 | n1 | n2 | n3 | s1 | w | Weight |
| BNM4 32/16B/A | 50 | 32 | 80 | 50 | 413 | 12 | 132 | 160 | 261 | 119 | 119 | 100 | 70 | 240 | 190 | 35 | 14 | 255 | 33.4 |
| BNM4 32/16A/A | 50 | 32 | 80 | 50 | 413 | 12 | 132 | 160 | 261 | 119 | 119 | 100 | 70 | 240 | 190 | 35 | 14 | 255 | 33.5 |
| BNM4 32/20B/A | 50 | 32 | 80 | 50 | 413 | 12 | 160 | 180 | 289 | 140 | 140 | 100 | 70 | 240 | 190 | 40 | 14 | 257 | 39.5 |
| BNM4 32/20A/B | 50 | 32 | 80 | 50 | 453 | 12 | 160 | 180 | 289 | 140 | 140 | 100 | 70 | 240 | 190 | 40 | 14 | 297 | 45.2 |
| BNM4 40/16C/A | 65 | 40 | 80 | 50 | 413 | 10 | 132 | 160 | 261 | 120 | 122 | 100 | 70 | 240 | 190 | 35 | 14 | 255 | 35 |
| BNM4 40/16B/A | 65 | 40 | 80 | 50 | 413 | 10 | 132 | 160 | 261 | 120 | 122 | 100 | 70 | 240 | 190 | 35 | 14 | 255 | 36.8 |
| BNM4 40/16A/B | 65 | 40 | 80 | 50 | 453 | 10 | 132 | 160 | 261 | 120 | 122 | 100 | 70 | 240 | 190 | 35 | 14 | 295 | 42.8 |
| BNM4 40/20B/B | 65 | 40 | 100 | 50 | 499 | 12 | 160 | 180 | 299 | 141 | 141 | 100 | 70 | 265 | 212 | 37 | 14 | 297 | 54.6 |
| BNM4 40/20A/B | 65 | 40 | 100 | 50 | 499 | 12 | 160 | 180 | 299 | 141 | 141 | 100 | 70 | 265 | 212 | 37 | 14 | 297 | 55.1 |
| BNM4 50/16B/B | 65 | 50 | 100 | 50 | 499 | 12 | 160 | 180 | 299 | 125 | 140 | 100 | 70 | 265 | 212 | 37 | 14 | 297 | 52.7 |
| BNM4 50/16A/B | 65 | 50 | 100 | 50 | 499 | 12 | 160 | 180 | 299 | 125 | 140 | 100 | 70 | 265 | 212 | 37 | 14 | 297 | 53 |
| BNM4 50/20C/C | 65 | 50 | 100 | 50 | 509 | 14 | 160 | 200 | 299 | 142 | 152 | 100 | 70 | 265 | 212 | 37 | 14 | 307 | 59.6 |
| BNM4 50/20B/C | 65 | 50 | 100 | 50 | 509 | 14 | 160 | 200 | 299 | 142 | 152 | 100 | 70 | 265 | 212 | 37 | 14 | 307 | - |
| BNM4 50/20A/C | 65 | 50 | 100 | 50 | 528 | 14 | 160 | 200 | 321 | 142 | 152 | 100 | 70 | 265 | 212 | 34 | 14 | 276 | 73.6 |
| BNM4 65/16C/C | 80 | 65 | 100 | 65 | 499 | 12 | 160 | 200 | 299 | 140 | 161 | 125 | 95 | 280 | 212 | 37 | 14 | 297 | - |
| BNM4 65/16B/C | 80 | 65 | 100 | 65 | 499 | 12 | 160 | 200 | 299 | 140 | 161 | 125 | 95 | 280 | 212 | 37 | 14 | 297 | 54.9 |
| BNM4 65/16A/C | 80 | 65 | 100 | 65 | 499 | 12 | 160 | 200 | 299 | 140 | 161 | 125 | 95 | 280 | 212 | 37 | 14 | 297 | 58.4 |
| BNM4 65/16S/A | 80 | 65 | 100 | 65 | 528 | 12 | 160 | 200 | 321 | 140 | 161 | 125 | 95 | 280 | 212 | 34 | 14 | 276 | 69.8 |
| BNM4 65/20B/A | 80 | 65 | 100 | 65 | 528 | 12 | 180 | 225 | 341 | 159 | 179 | 125 | 95 | 320 | 250 | 37 | 14 | 278 | 77.5 |
| BNM4 65/20A/A | 80 | 65 | 100 | 65 | 528 | 12 | 180 | 225 | 341 | 159 | 179 | 125 | 95 | 320 | 250 | 37 | 14 | 278 | 77.9 |
| BNM4 65/25B/B | 80 | 65 | 100 | 80 | 543 | 15 | 200 | 250 | 361 | 178 | 195 | 160 | 120 | 360 | 280 | 41 | 18 | 295 | 110.4 |
| BNM4 65/25A/C | 80 | 65 | 100 | 80 | 644 | 15 | 200 | 250 | 387 | 178 | 195 | 160 | 120 | 360 | 280 | 36 | 18 | 403 | - |
| BNM4 65/31C/B | 80 | 65 | 125 | 80 | 669 | 20 | 225 | 280 | 412 | 223 | 223 | 160 | 120 | 400 | 315 | 41 | 18 | 405 | 170.2 |
| BNM4 65/31B/B | 80 | 65 | 125 | 80 | 669 | 20 | 225 | 280 | 412 | 223 | 223 | 160 | 120 | 400 | 315 | 41 | 18 | 405 | - |
| BNM4 65/31A/B | 80 | 65 | 125 | 80 | 719 | 20 | 225 | 280 | 412 | 223 | 223 | 160 | 120 | 400 | 315 | 41 | 18 | 465 | - |
| BNM4 80/20C/A | 100 | 80 | 125 | 65 | 563 | 18 | 180 | 250 | 341 | 170 | 194 | 125 | 95 | 345 | 280 | 37 | 14 | 288 | - |
| BNM4 80/20B/A | 100 | 80 | 125 | 65 | 563 | 18 | 180 | 250 | 341 | 170 | 194 | 125 | 95 | 345 | 280 | 37 | 14 | 288 | 88 |
| BNM4 80/20A/A | 100 | 80 | 125 | 65 | 563 | 18 | 180 | 250 | 341 | 170 | 194 | 125 | 95 | 345 | 280 | 37 | 14 | 288 | - |
| BNM4 80/25C/A | 100 | 80 | 125 | 80 | 568 | 20 | 200 | 280 | 361 | 191 | 211 | 160 | 120 | 400 | 315 | 41 | 18 | 295 | 114.7 |
| BNM4 80/31C/B | 100 | 80 | 125 | 80 | 744 | 17 | 250 | 315 | 437 | 222 | 234 | 160 | 120 | 400 | 315 | 46 | 18 | 482 | - |
| BNM4 100/20C/A | 125 | 100 | 125 | 80 | 563 | 15 | 200 | 280 | 361 | 179 | 211 | 160 | 120 | 360 | 280 | 41 | 18 | 290 | 96.6 |
| BNM4 100/20B/A | 125 | 100 | 125 | 80 | 563 | 15 | 200 | 280 | 361 | 179 | 211 | 160 | 120 | 360 | 280 | 41 | 18 | 290 | 103 |
| BNM4 100/20A/C | 125 | 100 | 125 | 80 | 669 | 15 | 200 | 280 | 387 | 179 | 211 | 160 | 120 | 360 | 280 | 36 | 18 | 403 | 123 |

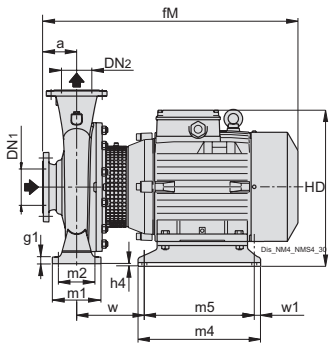


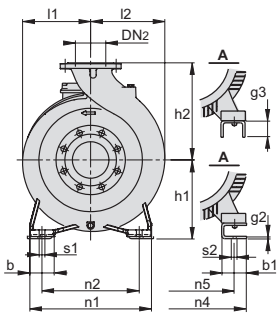


**Flanges EN 1092-2** PN 10-16

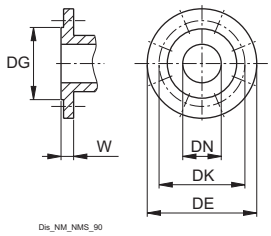


| mm | | | | | | |
|---|---|---|---|---|---|---|
| DN | DG | DK | DE | Holes N° | Holes ø | W |
| 32 | 76 | 100 | 140 | 4 | 19 | 18 |
| 40 | 84 | 110 | 150 | 4 | 19 | 18 |
| 50 | 99 | 125 | 165 | 4 | 19 | 20 |
| 65 | 118 | 145 | 185 | 4 | 19 | 20 |
| 80 | 132 | 160 | 200 | 8 | 19 | 22 |
| 100 | 156 | 180 | 220 | 8 | 19 | 24 |
| 125 | 184 | 210 | 250 | 8 | 19 | 24 |

| TYPE | | | mm | | | | | | | | | | | | | | | | | | | | | kg |
|---|---|---|---|---|---|---|---|---|---|---|---|---|---|---|---|---|---|---|---|---|---|---|---|---|
| | DN1 | DN2 | a | b | b1 | fM | g2 | h1 | h2 | h4 | HD | l1 | l2 | m1 | m2 | m4 | m5 | n1 | n2 | n5 | s1 | s2 | w | w1 | Weight |
| BNM4 4025/C/C | 65 | 40 | 100 | 65 | 54 | 495 | 6 | 190 | 225 | 10 | 329 | 177 | 177 | 125 | 95 | 205 | 175 | 320 | 250 | 140 | 14 | 10 | 115 | 15 | - |
| BNM4 4025/B/C | 65 | 40 | 100 | 65 | 60 | 513 | 6 | 190 | 225 | 10 | 351 | 177 | 177 | 125 | 95 | 280 | 250 | 320 | 250 | 190 | 14 | 12 | 80 | 15 | 92.2 |
| BNM4 4025/A/B | 65 | 40 | 100 | 65 | 60 | 513 | 6 | 190 | 225 | 10 | 351 | 177 | 177 | 125 | 95 | 280 | 250 | 320 | 250 | 190 | 14 | 12 | 80 | 15 | 91.6 |
| BNM4 5025/D/B | 65 | 50 | 100 | 65 | 60 | 513 | 6 | 190 | 225 | 10 | 351 | 171 | 171 | 125 | 95 | 280 | 250 | 320 | 250 | 190 | 14 | 12 | 80 | 15 | - |
| BNM4 5025/C/C | 65 | 50 | 100 | 65 | 60 | 513 | 6 | 190 | 225 | 10 | 351 | 171 | 171 | 125 | 95 | 280 | 250 | 320 | 250 | 190 | 14 | 12 | 80 | 15 | 96.9 |
| BNM4 5025/B/B | 65 | 50 | 100 | 65 | 60 | 513 | 6 | 190 | 225 | 10 | 351 | 171 | 171 | 125 | 95 | 280 | 250 | 320 | 250 | 190 | 14 | 12 | 80 | 15 | 95.7 |
| BNM4 5025/A/B | 65 | 50 | 100 | 65 | 60 | 513 | 6 | 190 | 225 | 10 | 351 | 171 | 171 | 125 | 95 | 280 | 250 | 320 | 250 | 190 | 14 | 12 | 80 | 15 | 104 |

# NM4, NMS4

## Dimensions and weights with IE3 motor

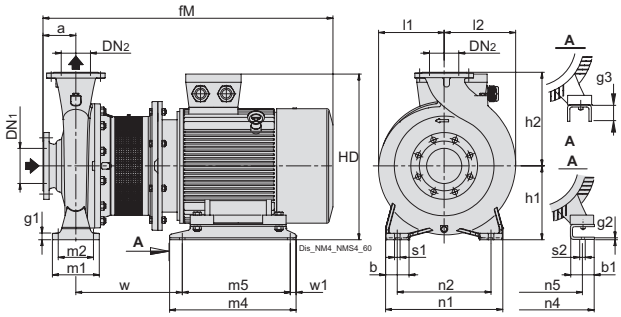


**Flanges EN 1092-2** PN 10-16 (DN 200 PN 10)

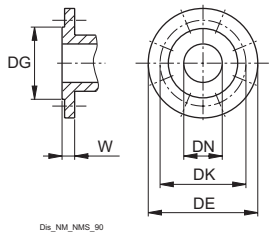


| mm | | | | | | |
|---|---|---|---|---|---|---|
| DN | DG | DK | DE | Holes N° | Holes ø | W |
| 32 | 76 | 100 | 140 | 4 | 19 | 18 |
| 40 | 84 | 110 | 150 | 4 | 19 | 18 |
| 50 | 99 | 125 | 165 | 4 | 19 | 20 |
| 65 | 118 | 145 | 185 | 4 | 19 | 20 |
| 80 | 132 | 160 | 200 | 8 | 19 | 22 |
| 100 | 156 | 180 | 220 | 8 | 19 | 24 |
| 125 | 184 | 210 | 250 | 8 | 19 | 24 |
| 150 | 211 | 240 | 285 | 8 | 23 | 26 |
| 200 | 266 | 295 | 340 | 8* | 23 | 30 |
| 250 | 319 | 355 | 405 | 12 | 28 | 26 |

| TYPE | | | mm | | | | | | | | | | | | | | | | | | | | | | | |
|---|---|---|---|---|---|---|---|---|---|---|---|---|---|---|---|---|---|---|---|---|---|---|---|---|---|---|
| | DN1 | DN2 | a | b | b1 | fM | g1 | g2 | g3 | h1 | h2 | HD | l1 | l2 | m1 | m2 | m4 | m5 | n1 | n2 | n4 | n5 | s1 | s2 | w | w1 |
| BNMS4 65/315A | 80 | 65 | 125 | 80 | 85 | 885 | 20 | - | 65 | 225 | 280 | 475 | 223 | 223 | 160 | 120 | 394 | 354 | 400 | 315 | 339 | 254 | 18 | 14 | 343 | 20 |
| BNMS4 80/315A | 100 | 80 | 125 | 80 | 60 | 932 | 20 | 6 | - | 250 | 315 | 500 | 222 | 234 | 160 | 120 | 480 | 440 | 400 | 315 | 314 | 254 | 18 | 15 | 281 | 20 |
| BNMS4 80/400A/B | 125 | 80 | 125 | 80 | 83 | 1048 | 15 | 6 | - | 280 | 355 | 580 | 267 | 269 | 160 | 120 | 540 | 455 | 435 | 355 | 401 | 318 | 18 | 19 | 334 | 25 |
| BNMS4 100/250A/A | 125 | 100 | 140 | 80 | 85 | 888 | 20 | - | 65 | 225 | 280 | 475 | 205 | 233 | 160 | 120 | 394 | 354 | 400 | 315 | 339 | 254 | 18 | 14 | 331 | 20 |
| BNMS4 100/315A/A | 125 | 100 | 140 | 80 | 70 | 1007 | 20 | 6 | - | 250 | 315 | 520 | 229 | 251 | 160 | 120 | 432 | 382 | 400 | 315 | 349 | 279 | 18 | 15 | 312 | 25 |
| BNMS4 100/400A/A | 125 | 100 | 140 | 100 | 103 | 1143 | 27 | - | 55 | 280 | 355 | 610 | 268 | 280 | 200 | 150 | 540 | 490 | 500 | 400 | 459 | 356 | 22 | 19 | 384 | 25 |
| BNMS4 125/250A/A | 150 | 125 | 140 | 80 | 60 | 935 | 20 | 6 | - | 250 | 355 | 500 | 236 | 268 | 160 | 120 | 480 | 440 | 400 | 315 | 314 | 254 | 18 | 15 | 269 | 20 |
| BNMS4 125/315A/A | 150 | 125 | 140 | 100 | 83 | 1063 | 27 | 6 | - | 280 | 355 | 580 | 249 | 278 | 200 | 150 | 540 | 455 | 500 | 400 | 401 | 318 | 22 | 19 | 334 | 25 |
| BNMS4 125/400A/A | 150 | 125 | 140 | 100 | 100 | 1360 | 27 | - | 65 | 315 | 400 | 677 | 280 | 305 | 200 | 150 | 580 | 530 | 500 | 400 | 506 | 406 | 22 | 24 | 427 | 25 |
| BNMS4 150/315A/B | 200 | 150 | 160 | 100 | 103 | 1163 | 27 | - | 55 | 280 | 400 | 610 | 256 | 307 | 200 | 150 | 540 | 490 | 550 | 450 | 459 | 356 | 22 | 19 | 384 | 25 |
| BNMS4 150/400A/B | 200 | 150 | 160 | 100 | 100 | 1420 | 27 | - | 35 | 315 | 450 | 705 | 295 | 328 | 200 | 150 | 690 | 600 | 550 | 450 | 557 | 457 | 22 | 24 | 449 | 45 |
| BNMS4 80/315B/A | 100 | 80 | 125 | 80 | 60 | 885 | 20 | 6 | - | 250 | 315 | 500 | 222 | 234 | 160 | 120 | 480 | 440 | 400 | 315 | 314 | 254 | 18 | 15 | 281 | 20 |
| BNMS4 80/400B/B | 125 | 80 | 125 | 80 | 70 | 1030 | 15 | 6 | - | 280 | 355 | 566 | 267 | 269 | 160 | 120 | 520 | 435 | 435 | 355 | 349 | 279 | 18 | 15 | 318 | 25 |
| BNMS4 100/315B/A | 125 | 100 | 140 | 80 | 60 | 947 | 20 | 6 | - | 250 | 315 | 500 | 229 | 251 | 160 | 120 | 480 | 440 | 400 | 315 | 314 | 254 | 18 | 15 | 281 | 20 |
| BNMS4 100/400B/A | 125 | 100 | 140 | 100 | 83 | 1063 | 27 | 6 | - | 280 | 355 | 580 | 268 | 280 | 200 | 150 | 540 | 455 | 500 | 400 | 401 | 318 | 22 | 19 | 334 | 25 |
| BNMS4 125/250B/A | 150 | 125 | 140 | 80 | 60 | 888 | 20 | 6 | - | 250 | 355 | 500 | 236 | 268 | 160 | 120 | 480 | 440 | 400 | 315 | 314 | 254 | 18 | 15 | 269 | 20 |
| BNMS4 125/315B/A | 150 | 125 | 140 | 100 | 70 | 1045 | 27 | 6 | - | 280 | 355 | 566 | 249 | 278 | 200 | 150 | 520 | 435 | 500 | 400 | 349 | 279 | 22 | 15 | 318 | 25 |
| BNMS4 125/400B/A | 150 | 125 | 140 | 100 | 103 | 1128 | 27 | 8 | - | 315 | 400 | 645 | 280 | 305 | 200 | 150 | 540 | 461 | 500 | 400 | 459 | 356 | 22 | 19 | 409 | 25 |
| BNMS4 150/315B/B | 200 | 150 | 160 | 100 | 83 | 1083 | 27 | 6 | - | 280 | 400 | 580 | 256 | 307 | 200 | 150 | 540 | 455 | 550 | 450 | 401 | 318 | 22 | 19 | 334 | 25 |
| BNMS4 150/400B/B | 200 | 150 | 160 | 100 | 100 | 1380 | 27 | - | 65 | 315 | 450 | 677 | 295 | 328 | 200 | 150 | 580 | 530 | 550 | 450 | 506 | 406 | 22 | 24 | 427 | 25 |
| BNMS4 80/315C | 100 | 80 | 125 | 80 | 60 | 885 | 20 | 6 | - | 250 | 315 | 500 | 222 | 234 | 160 | 120 | 480 | 440 | 400 | 315 | 314 | 254 | 18 | 15 | 281 | 20 |
| BNMS4 80/400C/B | 125 | 80 | 125 | 80 | 70 | 997 | 15 | 6 | - | 280 | 355 | 550 | 267 | 269 | 160 | 120 | 520 | 435 | 435 | 355 | 349 | 279 | 18 | 15 | 318 | 25 |
| BNMS4 100/315C/A | 125 | 100 | 140 | 80 | 60 | 900 | 20 | 6 | - | 250 | 315 | 500 | 229 | 251 | 160 | 120 | 480 | 440 | 400 | 315 | 314 | 254 | 18 | 15 | 281 | 20 |
| BNMS4 100/400C/A | 125 | 100 | 140 | 100 | 70 | 1045 | 27 | 6 | - | 280 | 355 | 566 | 268 | 280 | 200 | 150 | 520 | 435 | 500 | 400 | 349 | 279 | 22 | 15 | 318 | 25 |
| BNMS4 125/250C/A | 150 | 125 | 140 | 80 | 60 | 888 | 20 | 6 | - | 250 | 355 | 500 | 236 | 268 | 160 | 120 | 480 | 440 | 400 | 315 | 314 | 254 | 18 | 15 | 269 | 20 |
| BNMS4 125/315C/A | 150 | 125 | 140 | 100 | 70 | 1012 | 27 | 6 | - | 280 | 355 | 550 | 249 | 278 | 200 | 150 | 520 | 435 | 500 | 400 | 349 | 279 | 22 | 15 | 318 | 25 |
| BNMS4 125/400C/A | 150 | 125 | 140 | 100 | 103 | 1143 | 27 | 8 | - | 315 | 400 | 645 | 280 | 305 | 200 | 150 | 540 | 461 | 500 | 400 | 459 | 356 | 22 | 19 | 409 | 25 |
| BNMS4 150/315C/B | 200 | 150 | 160 | 100 | 70 | 1065 | 27 | 6 | - | 280 | 400 | 566 | 256 | 307 | 200 | 150 | 520 | 435 | 550 | 450 | 349 | 279 | 22 | 15 | 318 | 25 |
| BNMS4 150/315D/B | 200 | 150 | 160 | 100 | 70 | 1032 | 27 | 6 | - | 280 | 400 | 550 | 256 | 307 | 200 | 150 | 520 | 435 | 550 | 450 | 349 | 279 | 22 | 15 | 318 | 25 |
| BNMS4 80/315S | 100 | 80 | 125 | 80 | 70 | 992 | 20 | 6 | - | 250 | 315 | 520 | 222 | 234 | 160 | 120 | 432 | 382 | 400 | 315 | 349 | 279 | 18 | 15 | 312 | 25 |
| BNMS4 80/400S | 125 | 80 | 125 | 80 | 103 | 1123 | 15 | - | 55 | 280 | 355 | 610 | 267 | 269 | 160 | 120 | 540 | 490 | 435 | 355 | 459 | 356 | 18 | 19 | 379 | 25 |
| BNMS4 150/315S | 200 | 150 | 160 | 100 | 103 | 1148 | 27 | - | 55 | 280 | 400 | 610 | 256 | 307 | 200 | 150 | 540 | 490 | 550 | 450 | 459 | 356 | 22 | 19 | 384 | 25 |
| BNMS4 150/400S | 200 | 150 | 160 | 100 | 100 | 1470 | 27 | - | 35 | 315 | 450 | 700 | 295 | 328 | 200 | 150 | 690 | 600 | 550 | 450 | 557 | 457 | 22 | 24 | 449 | 45 |

# NM4, NMS4

## Dimensions and weights with IE4 motor

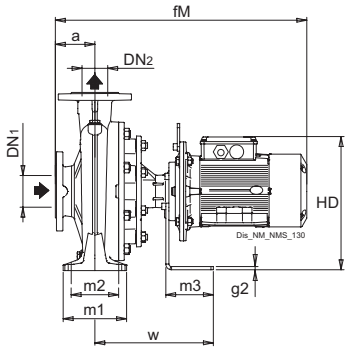


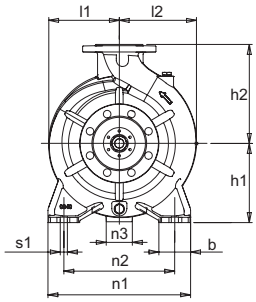


**Flanges EN 1092-2** PN 10-16

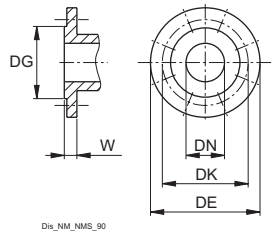


| mm | | | | | | |
|---|---|---|---|---|---|---|
| DN | DG | DK | DE | Holes N° | Holes ø | W |
| 32 | 76 | 100 | 140 | 4 | 19 | 18 |
| 40 | 84 | 110 | 150 | 4 | 19 | 18 |
| 50 | 99 | 125 | 165 | 4 | 19 | 20 |
| 65 | 118 | 145 | 185 | 4 | 19 | 20 |
| 80 | 132 | 160 | 200 | 8 | 19 | 22 |
| 100 | 156 | 180 | 220 | 8 | 19 | 24 |
| 125 | 184 | 210 | 250 | 8 | 19 | 24 |

| TYPE | | | mm | | | | | | | | | | | | | | | | | |
|---|---|---|---|---|---|---|---|---|---|---|---|---|---|---|---|---|---|---|---|---|
| | DN1 | DN2 | a | b | fM | g1 | g2 | h1 | h2 | HD | l1 | l2 | m1 | m2 | m3 | n1 | n2 | n3 | s1 | w |
| BNMS4 32/200A | 50 | 32 | 80 | 50 | 639 | 12 | 8 | 160 | 180 | 295 | 140 | 140 | 100 | 70 | 120 | 240 | 190 | 65 | 14 | 274 |
| BNMS4 40/160A | 65 | 40 | 80 | 50 | 639 | 10 | 8 | 132 | 160 | 267 | 120 | 122 | 100 | 70 | 120 | 240 | 190 | 65 | 14 | 274 |
| BNMS4 40/200B | 65 | 40 | 100 | 50 | 655 | 12 | 8 | 160 | 180 | 303 | 141 | 141 | 100 | 70 | 120 | 265 | 212 | 65 | 14 | 274 |
| BNMS4 40/200A | 65 | 40 | 100 | 50 | 655 | 12 | 8 | 160 | 180 | 303 | 141 | 141 | 100 | 70 | 120 | 265 | 212 | 65 | 14 | 274 |
| BNMS4 40/250C | 65 | 40 | 100 | 65 | 715 | 15 | 8 | 180 | 225 | 323 | 177 | 177 | 125 | 95 | 120 | 320 | 250 | 65 | 14 | 274 |
| BNMS4 40/250B | 65 | 40 | 100 | 65 | 711 | 15 | 8 | 180 | 225 | 336 | 177 | 177 | 125 | 95 | 120 | 320 | 250 | 65 | 14 | 274 |
| BNMS4 40/250A | 65 | 40 | 100 | 65 | 711 | 15 | 8 | 180 | 225 | 336 | 177 | 177 | 125 | 95 | 120 | 320 | 250 | 65 | 14 | 274 |
| BNMS4 50/160B | 65 | 50 | 100 | 50 | 655 | 12 | 8 | 160 | 180 | 303 | 125 | 140 | 100 | 70 | 120 | 265 | 212 | 65 | 14 | 274 |
| BNMS4 50/160A | 65 | 50 | 100 | 50 | 655 | 12 | 8 | 160 | 180 | 303 | 125 | 140 | 100 | 70 | 120 | 265 | 212 | 65 | 14 | 274 |
| BNMS4 50/200C | 65 | 50 | 100 | 50 | 655 | 14 | 8 | 160 | 200 | 303 | 142 | 152 | 100 | 70 | 120 | 265 | 212 | 65 | 14 | 274 |
| BNMS4 50/200B | 65 | 50 | 100 | 50 | 715 | 14 | 8 | 160 | 200 | 303 | 142 | 152 | 100 | 70 | 120 | 265 | 212 | 65 | 14 | 274 |
| BNMS4 50/200A | 65 | 50 | 100 | 50 | 711 | 14 | 8 | 160 | 200 | 316 | 142 | 152 | 100 | 70 | 120 | 265 | 212 | 65 | 14 | 274 |
| BNMS4 50/250D | 65 | 50 | 100 | 65 | 711 | 15 | 8 | 180 | 225 | 336 | 177 | 177 | 125 | 95 | 120 | 320 | 250 | 65 | 14 | 274 |
| BNMS4 50/250C | 65 | 50 | 100 | 65 | 711 | 15 | 8 | 180 | 225 | 336 | 177 | 177 | 125 | 95 | 120 | 320 | 250 | 65 | 14 | 274 |
| BNMS4 50/250B | 65 | 50 | 100 | 65 | 711 | 15 | 8 | 180 | 225 | 336 | 177 | 177 | 125 | 95 | 120 | 320 | 250 | 65 | 14 | 274 |
| BNMS4 50/250A | 65 | 50 | 100 | 65 | 637 | 15 | 8 | 180 | 225 | 354 | 177 | 177 | 125 | 95 | 120 | 320 | 250 | 65 | 14 | 274 |
| BNMS4 65/160C | 80 | 65 | 100 | 65 | 655 | 12 | 8 | 160 | 200 | 303 | 140 | 161 | 125 | 95 | 120 | 280 | 212 | 65 | 14 | 274 |
| BNMS4 65/160B | 80 | 65 | 100 | 65 | 655 | 12 | 8 | 160 | 200 | 303 | 140 | 161 | 125 | 95 | 120 | 280 | 212 | 65 | 14 | 274 |
| BNMS4 65/160A | 80 | 65 | 100 | 65 | 715 | 12 | 8 | 160 | 200 | 303 | 140 | 161 | 125 | 95 | 120 | 280 | 212 | 65 | 14 | 274 |
| BNMS4 65/160S | 80 | 65 | 100 | 65 | 711 | 12 | 8 | 160 | 200 | 316 | 140 | 161 | 125 | 95 | 120 | 280 | 212 | 65 | 14 | 274 |
| BNMS4 65/200B | 80 | 65 | 100 | 65 | 711 | 12 | 8 | 180 | 225 | 336 | 159 | 179 | 125 | 95 | 120 | 320 | 250 | 65 | 14 | 274 |
| BNMS4 65/200A | 80 | 65 | 100 | 65 | 711 | 12 | 8 | 180 | 225 | 336 | 159 | 179 | 125 | 95 | 120 | 320 | 250 | 65 | 14 | 274 |
| BNMS4 65/250B | 80 | 65 | 100 | 80 | 662 | 15 | 8 | 200 | 250 | 374 | 178 | 195 | 160 | 120 | 120 | 360 | 280 | 65 | 18 | 299 |
| BNMS4 80/160C | 100 | 80 | 125 | 65 | 680 | 12 | 8 | 180 | 225 | 323 | 152 | 181 | 125 | 95 | 120 | 320 | 250 | 65 | 14 | 274 |
| BNMS4 80/160B | 100 | 80 | 125 | 65 | 740 | 12 | 8 | 180 | 225 | 323 | 152 | 181 | 125 | 95 | 120 | 320 | 250 | 65 | 14 | 274 |
| BNMS4 80/160A | 100 | 80 | 125 | 65 | 736 | 12 | 8 | 180 | 225 | 336 | 152 | 181 | 125 | 95 | 120 | 320 | 250 | 65 | 14 | 274 |
| BNMS4 80/200C | 100 | 80 | 125 | 65 | 761 | 15 | 8 | 180 | 250 | 336 | 170 | 194 | 125 | 95 | 120 | 345 | 280 | 65 | 14 | 299 |
| BNMS4 80/200B | 100 | 80 | 125 | 65 | 761 | 15 | 8 | 180 | 250 | 336 | 170 | 194 | 125 | 95 | 120 | 345 | 280 | 65 | 14 | 299 |
| BNMS4 80/200A | 100 | 80 | 125 | 65 | 687 | 15 | 8 | 180 | 250 | 354 | 170 | 194 | 125 | 95 | 120 | 345 | 280 | 65 | 14 | 299 |
| BNMS4 80/250C | 100 | 80 | 125 | 80 | 687 | 20 | 8 | 200 | 280 | 374 | 191 | 211 | 160 | 120 | 120 | 400 | 315 | 65 | 18 | 299 |
| BNMS4 100/200C | 125 | 100 | 125 | 80 | 761 | 15 | 8 | 200 | 280 | 356 | 179 | 211 | 160 | 120 | 120 | 360 | 280 | 65 | 18 | 299 |
| BNMS4 100/200B | 125 | 100 | 125 | 80 | 687 | 15 | 8 | 200 | 280 | 374 | 179 | 211 | 160 | 120 | 120 | 360 | 280 | 65 | 18 | 299 |

# NM4, NMS4

## Dimensions and weights with IE4 motor

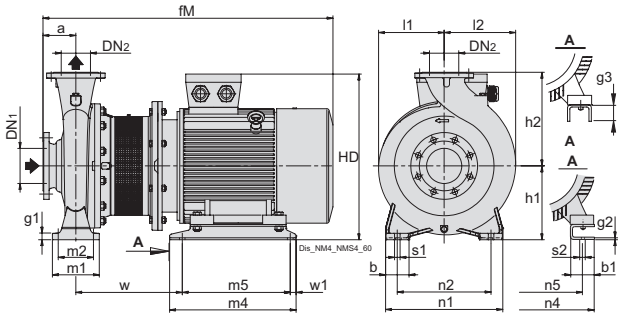


**Flanges EN 1092-2** PN 10-16 (DN 200 PN 10)

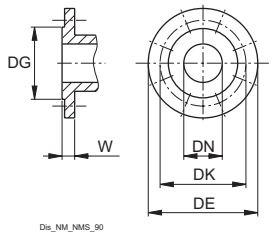


| mm | | | | | | |
|---|---|---|---|---|---|---|
| DN | DG | DK | DE | Holes N° | Holes ø | W |
| 32 | 76 | 100 | 140 | 4 | 19 | 18 |
| 40 | 84 | 110 | 150 | 4 | 19 | 18 |
| 50 | 99 | 125 | 165 | 4 | 19 | 20 |
| 65 | 118 | 145 | 185 | 4 | 19 | 20 |
| 80 | 132 | 160 | 200 | 8 | 19 | 22 |
| 100 | 156 | 180 | 220 | 8 | 19 | 24 |
| 125 | 184 | 210 | 250 | 8 | 19 | 24 |
| 150 | 211 | 240 | 285 | 8 | 23 | 26 |
| 200 | 266 | 295 | 340 | 8* | 23 | 30 |
| 250 | 319 | 355 | 405 | 12 | 28 | 26 |

| TYPE | | | mm | | | | | | | | | | | | | | | | | | | | | | | |
|---|---|---|---|---|---|---|---|---|---|---|---|---|---|---|---|---|---|---|---|---|---|---|---|---|---|---|
| | DN1 | DN2 | a | b | b1 | fM | g1 | g2 | g3 | h1 | h2 | HD | l1 | l2 | m1 | m2 | m4 | m5 | n1 | n2 | n4 | n5 | s1 | s2 | w | w1 |
| BNMS4 65/250A | 80 | 65 | 100 | 80 | 69 | 708 | 15 | 6 | - | 200 | 250 | 392 | 178 | 195 | 160 | 120 | 298 | 258 | 360 | 280 | 285 | 216 | 18 | 12 | 281 | 20 |
| BNMS4 65/315C | 80 | 65 | 125 | 80 | 69 | 733 | 20 | 6 | - | 225 | 280 | 417 | 223 | 223 | 160 | 120 | 298 | 258 | 400 | 315 | 285 | 216 | 18 | 12 | 281 | 20 |
| BNMS4 65/315B | 80 | 65 | 125 | 80 | 69 | 770 | 20 | 6 | - | 225 | 280 | 419 | 223 | 223 | 160 | 120 | 298 | 258 | 400 | 315 | 285 | 216 | 18 | 12 | 300 | 20 |
| BNMS4 65/315A | 80 | 65 | 125 | 80 | 85 | 883 | 20 | - | 65 | 225 | 280 | 478 | 223 | 223 | 160 | 120 | 394 | 354 | 400 | 315 | 339 | 254 | 18 | 14 | 343 | 20 |
| BNMS4 80/250B | 100 | 80 | 125 | 80 | 69 | 733 | 20 | 6 | - | 200 | 280 | 392 | 191 | 211 | 160 | 120 | 298 | 258 | 400 | 315 | 285 | 216 | 18 | 12 | 281 | 20 |
| BNMS4 80/250A | 100 | 80 | 125 | 80 | 69 | 770 | 20 | 6 | - | 200 | 280 | 394 | 191 | 211 | 160 | 120 | 298 | 258 | 400 | 315 | 285 | 216 | 18 | 12 | 300 | 20 |
| BNMS4 80/315C | 100 | 80 | 125 | 80 | 60 | 883 | 20 | 6 | - | 250 | 315 | 503 | 222 | 234 | 160 | 120 | 480 | 440 | 400 | 315 | 314 | 254 | 18 | 15 | 281 | 20 |
| BNMS4 80/315B/A | 100 | 80 | 125 | 80 | 60 | 883 | 20 | 6 | - | 250 | 315 | 503 | 222 | 234 | 160 | 120 | 480 | 440 | 400 | 315 | 314 | 254 | 18 | 15 | 281 | 20 |
| BNMS4 80/315A | 100 | 80 | 125 | 80 | 60 | 927 | 20 | 6 | - | 250 | 315 | 503 | 222 | 234 | 160 | 120 | 480 | 440 | 400 | 315 | 314 | 254 | 18 | 15 | 281 | 20 |
| BNMS4 80/315S | 100 | 80 | 125 | 80 | 70 | 952 | 20 | 6 | - | 250 | 315 | 520 | 222 | 234 | 160 | 120 | 432 | 382 | 400 | 315 | 349 | 279 | 18 | 15 | 312 | 25 |
| BNMS4 80/400C/B | 125 | 80 | 125 | 80 | 70 | 957 | 15 | 6 | - | 280 | 355 | 550 | 267 | 269 | 160 | 120 | 520 | 435 | 435 | 355 | 349 | 279 | 18 | 15 | 318 | 25 |
| BNMS4 80/400B/B | 125 | 80 | 125 | 80 | 70 | 1015 | 15 | 6 | - | 280 | 355 | 551 | 267 | 269 | 160 | 120 | 520 | 435 | 435 | 355 | 349 | 279 | 18 | 15 | 318 | 25 |
| BNMS4 80/400A/B | 125 | 80 | 125 | 80 | 83 | 1043 | 15 | 6 | - | 280 | 355 | 580 | 267 | 269 | 160 | 120 | 540 | 455 | 435 | 355 | 401 | 318 | 18 | 19 | 334 | 25 |
| BNMS4 80/400S | 125 | 80 | 125 | 80 | 103 | 1119 | 15 | - | 55 | 280 | 355 | 603 | 267 | 269 | 160 | 120 | 540 | 490 | 435 | 355 | 459 | 356 | 18 | 19 | 379 | 25 |
| BNMS4 100/200A | 125 | 100 | 125 | 80 | 69 | 733 | 15 | 6 | - | 200 | 280 | 392 | 179 | 211 | 160 | 120 | 298 | 258 | 360 | 280 | 285 | 216 | 18 | 12 | 281 | 20 |
| BNMS4 100/250B | 125 | 100 | 140 | 80 | 69 | 785 | 20 | 6 | - | 225 | 280 | 419 | 205 | 233 | 160 | 120 | 298 | 258 | 400 | 315 | 285 | 216 | 18 | 12 | 300 | 20 |
| BNMS4 100/250A/A | 125 | 100 | 140 | 80 | 85 | 886 | 20 | - | 65 | 225 | 280 | 478 | 205 | 233 | 160 | 120 | 394 | 354 | 400 | 315 | 339 | 254 | 18 | 14 | 331 | 20 |
| BNMS4 100/315C/A | 125 | 100 | 140 | 80 | 60 | 898 | 20 | 6 | - | 250 | 315 | 503 | 229 | 251 | 160 | 120 | 480 | 440 | 400 | 315 | 314 | 254 | 18 | 15 | 281 | 20 |
| BNMS4 100/315B/A | 125 | 100 | 140 | 80 | 60 | 942 | 20 | 6 | - | 250 | 315 | 503 | 229 | 251 | 160 | 120 | 480 | 440 | 400 | 315 | 314 | 254 | 18 | 15 | 281 | 20 |
| BNMS4 100/315A/A | 125 | 100 | 140 | 80 | 70 | 967 | 20 | 6 | - | 250 | 315 | 520 | 229 | 251 | 160 | 120 | 432 | 382 | 400 | 315 | 349 | 279 | 18 | 15 | 312 | 25 |
| BNMS4 100/400C/A | 125 | 100 | 140 | 100 | 70 | 1030 | 27 | 6 | - | 280 | 355 | 551 | 268 | 280 | 200 | 150 | 520 | 435 | 500 | 400 | 349 | 279 | 22 | 15 | 318 | 25 |
| BNMS4 100/400B/A | 125 | 100 | 140 | 100 | 83 | 1058 | 27 | 6 | - | 280 | 355 | 580 | 268 | 280 | 200 | 150 | 540 | 455 | 500 | 400 | 401 | 318 | 22 | 19 | 334 | 25 |
| BNMS4 100/400A/A | 125 | 100 | 140 | 100 | 103 | 1139 | 27 | - | 55 | 280 | 355 | 603 | 268 | 280 | 200 | 150 | 540 | 490 | 500 | 400 | 459 | 356 | 22 | 19 | 384 | 25 |
| BNMS4 125/250E | 150 | 125 | 140 | 80 | 69 | 748 | 20 | 6 | - | 250 | 355 | 417 | 236 | 268 | 160 | 120 | 298 | 258 | 400 | 315 | 285 | 216 | 18 | 12 | 281 | 20 |
| BNMS4 125/250D | 150 | 125 | 140 | 80 | 69 | 785 | 20 | 6 | - | 250 | 355 | 419 | 236 | 268 | 160 | 120 | 298 | 258 | 400 | 315 | 285 | 216 | 18 | 12 | 300 | 20 |
| BNMS4 125/250C/A | 150 | 125 | 140 | 80 | 60 | 886 | 20 | 6 | - | 250 | 355 | 503 | 236 | 268 | 160 | 120 | 480 | 440 | 400 | 315 | 314 | 254 | 18 | 15 | 269 | 20 |
| BNMS4 125/250B/A | 150 | 125 | 140 | 80 | 60 | 886 | 20 | 6 | - | 250 | 355 | 503 | 236 | 268 | 160 | 120 | 480 | 440 | 400 | 315 | 314 | 254 | 18 | 15 | 269 | 20 |
| BNMS4 125/250A/A | 150 | 125 | 140 | 80 | 60 | 930 | 20 | 6 | - | 250 | 355 | 503 | 236 | 268 | 160 | 120 | 480 | 440 | 400 | 315 | 314 | 254 | 18 | 15 | 269 | 20 |
| BNMS4 125/315C/A | 150 | 125 | 140 | 100 | 70 | 972 | 27 | 6 | - | 280 | 355 | 550 | 249 | 278 | 200 | 150 | 520 | 435 | 500 | 400 | 349 | 279 | 22 | 15 | 318 | 25 |
| BNMS4 125/315B/A | 150 | 125 | 140 | 100 | 70 | 1030 | 27 | 6 | - | 280 | 355 | 551 | 249 | 278 | 200 | 150 | 520 | 435 | 500 | 400 | 349 | 279 | 22 | 15 | 318 | 25 |
| BNMS4 125/315A/A | 150 | 125 | 140 | 100 | 83 | 1058 | 27 | 6 | - | 280 | 355 | 580 | 249 | 278 | 200 | 150 | 540 | 455 | 500 | 400 | 401 | 318 | 22 | 19 | 334 | 25 |
| BNMS4 125/400C/A | 150 | 125 | 140 | 100 | 103 | 1139 | 27 | 8 | - | 315 | 400 | 638 | 280 | 305 | 200 | 150 | 540 | 461 | 500 | 400 | 459 | 356 | 22 | 19 | 409 | 25 |
| BNMS4 125/400B/A | 150 | 125 | 140 | 100 | 103 | 1194 | 27 | 8 | - | 315 | 400 | 638 | 280 | 305 | 200 | 150 | 540 | 461 | 500 | 400 | 459 | 356 | 22 | 19 | 409 | 25 |
| BNMS4 125/400A/A | 150 | 125 | 140 | 100 | 100 | 1226 | 27 | - | 65 | 315 | 400 | 677 | 280 | 305 | 200 | 150 | 580 | 530 | 500 | 400 | 506 | 406 | 22 | 24 | 427 | 25 |
| BNMS4 150/315D/B | 200 | 150 | 160 | 100 | 70 | 992 | 27 | 6 | - | 280 | 400 | 550 | 256 | 307 | 200 | 150 | 520 | 435 | 550 | 450 | 349 | 279 | 22 | 15 | 318 | 25 |
| BNMS4 150/315C/B | 200 | 150 | 160 | 100 | 70 | 1050 | 27 | 6 | - | 280 | 400 | 551 | 256 | 307 | 200 | 150 | 520 | 435 | 550 | 450 | 349 | 279 | 22 | 15 | 318 | 25 |
| BNMS4 150/315B/B | 200 | 150 | 160 | 100 | 83 | 1078 | 27 | 6 | - | 280 | 400 | 580 | 256 | 307 | 200 | 150 | 540 | 455 | 550 | 450 | 401 | 318 | 22 | 19 | 334 | 25 |
| BNMS4 150/315A/B | 200 | 150 | 160 | 100 | 103 | 1159 | 27 | - | 55 | 280 | 400 | 603 | 256 | 307 | 200 | 150 | 540 | 490 | 550 | 450 | 459 | 356 | 22 | 19 | 384 | 25 |
| BNMS4 150/315S | 200 | 150 | 160 | 100 | 103 | 1214 | 27 | - | 55 | 280 | 400 | 603 | 256 | 307 | 200 | 150 | 540 | 490 | 550 | 450 | 459 | 356 | 22 | 19 | 384 | 25 |
| BNMS4 150/400B/B | 200 | 150 | 160 | 100 | 100 | 1246 | 27 | - | 65 | 315 | 450 | 677 | 295 | 328 | 200 | 150 | 580 | 530 | 550 | 450 | 506 | 406 | 22 | 24 | 427 | 25 |
| BNMS4 150/400A/B | 200 | 150 | 160 | 100 | 100 | 1383 | 27 | - | 35 | 315 | 450 | 704 | 295 | 328 | 200 | 150 | 690 | 600 | 550 | 450 | 557 | 457 | 22 | 24 | 449 | 45 |
| BNMS4 150/400S | 200 | 150 | 160 | 100 | 100 | 1438 | 27 | - | 35 | 315 | 450 | 704 | 295 | 328 | 200 | 150 | 690 | 600 | 550 | 450 | 557 | 457 | 22 | 24 | 449 | 45 |

N

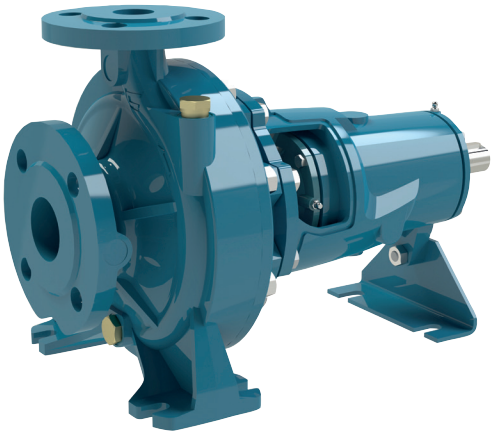

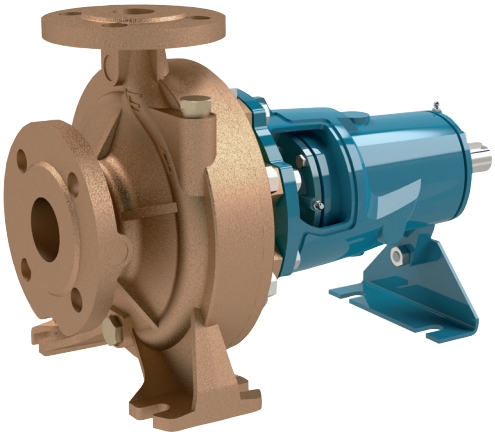

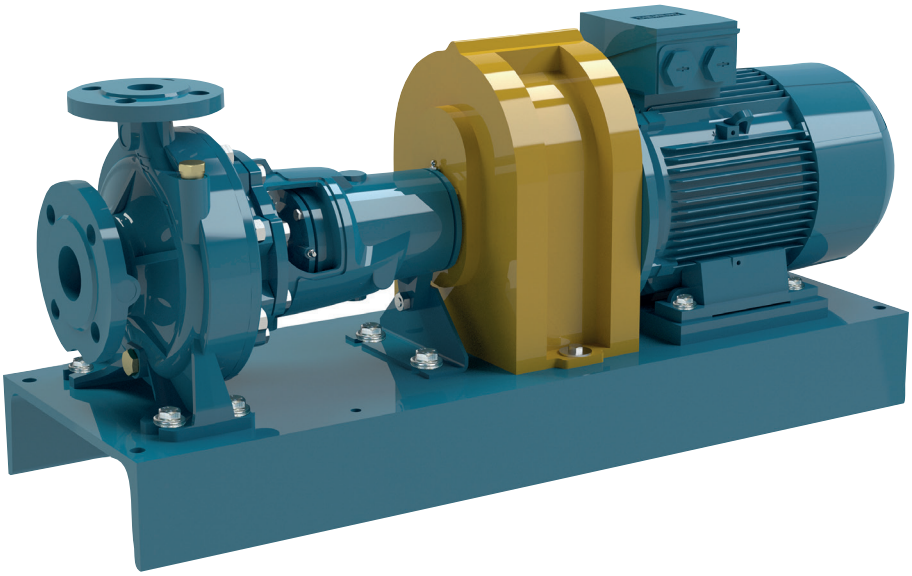

# End-suction centrifugal pumps EN 733

## Construction

Single-stage end-suction centrifugal pumps, with bearing bracket.
Pump casing with axial suction and radial delivery on top, main dimensions and performance according to EN 733 with additional sizes for completion. (N4 80-400.., N4 200-400..).
Back Pull-Out construction, for simple and quick dismantling and reassembly.
The pumps are supplied fully painted.
Rated speed of rotation (50 Hz):
**N** ≈ 2900 rpm.
**N4** ≈ 1450 rpm.

**Connections:** Connections: PN 10-16 flanges EN 1092-2 (PN 10 for DN 200).

**Counter-flanges** (on request)

| Sizes | Flanges |
|---|---|
| from N,N4 32-160 to N,N4 50-250 | Screwed flanges PN 16 EN 1092-1 |
| from N,N4 65-125 to N4 150-400 | Flanges for welding PN 10-16 EN 1092-1 (PN 10 for DN 200) |
| for N4 200-315, N4 200-400 | Flanges for welding PN 16 EN 1092-1 |

**Shaft sealing**
– Standardized mechanical seal in accordance with ISO 3069.
– Stuffing box seal (on request).

## Applications

For clean liquids without abrasives, which are non-aggressive for the pump materials ( solids content up to 0.2%).
For water supply.
For heating, air-conditioning, cooling and circulation plants.
For civil and industrial applications and for agriculture.
For fire fighting applications.
For irrigation.

## Operating conditions

Liquid temperature from -10 °C to +90 °C.
Ambient temperature up to 40° C.
Total suction lift up to 7 m.
Maximum permissible working pressure up to 16 bar (10 bar N,N4 32-12,16,20; N,N4 40-25; N4 65-31, N,N4 100-250,315,400, N4 125-250, N4 150-400).
10 bar bronze version.
Maximum permissible rotation speed: see table on page 124.

## Pump-Motor unit

N,N4 pump connected to a standard electric motor in B3 construction form (EN 60072-1), by means of a baseplate, driven by a flexible coupling and with coupling protection.
Three-phase 400 V , 50 Hz
IE3 efficiency class for three-phase motors (IE2 up to 0,65 kW).
IP protection: IP55
Motor suitable for operation with frequency converter.

## Special features on request

Special mechanical seal
Chrome-nickel steel AISI 316 pump-shaft.
Higher or lower liquid or ambient temperatures.
Other motor protection.
Motor for other voltage.
Frequency 60 Hz (as per 60 Hz data sheet).

## Designation

Example: BN4 50-250B/A
B = Bronze version (no indication: the pump is in the Cast Iron version)
N = Series
4 = 4-pole version (without indication, 2-pole version)
50 = Delivery port diameter in mm
250 = Nominal diameter of impeller
B = Impeller size
/A = indicates the version

**The electropumps comply with the European Regulation no. 547/2012.**

## Materials

| **Components** | **N, N4 Mechanical seal** | **N, N4 Packed gland** | **B-N, B-N4 Mechanical seal** |
|---|---|---|---|
| Pump casing | Cast iron GJL 250 EN 1561 for PN 10<br>Cast iron GJS 400-15 EN 1563 for PN 16 | Cast iron GJL 250 EN 1561 for PN 10<br>Cast iron GJS 400-15 EN 1563 for PN 16 | Bronze CC480K EN 1982 |
| Casing cover | Cast iron GJL 200 EN 1561 | Cast iron GJL 200 EN 1561 | Bronze CC480K EN 1982 |
| Impeller | Cast iron GJL 200 EN 1561 | Cast iron GJL 200 EN 1561 | Bronze CC480K EN 1982 |
| | Cast iron GJL 250 EN 1561<br>for N4 65-315; 80-315,400; 100-315,400; 125-315,400; 150-315,400; 200,315-400 | | Bronze B148 C95800 for N4 200-400 |
| | Brass CW617N EN 12165 for 32-125, 32(L)-160, 32(L)-200, 40-200 | | |
| Shaft | Stainless Steel 1.4104 EN 10088 (AISI 430F) | Steel 1.1191 EN 10083-2 (C45E) | Stainless Steel 1.4401 EN 10088 (AISI 316) |
| | Steel (AISI 2205) for N4 150-400S, N4 200,315-400 | | |
| Shaft sleeve | - | Bronze CC480K EN 1982 with chromate surface | - |
| Mechanical seal | Carbon - Ceramic - NBR | - | Carbon - Ceramic - NBR |
| Counter-flanges | Steel 1.0044 EN 10025-2 (Fe 430B) | | |

# N

## Coverage chart n ≈ 2900 rpm

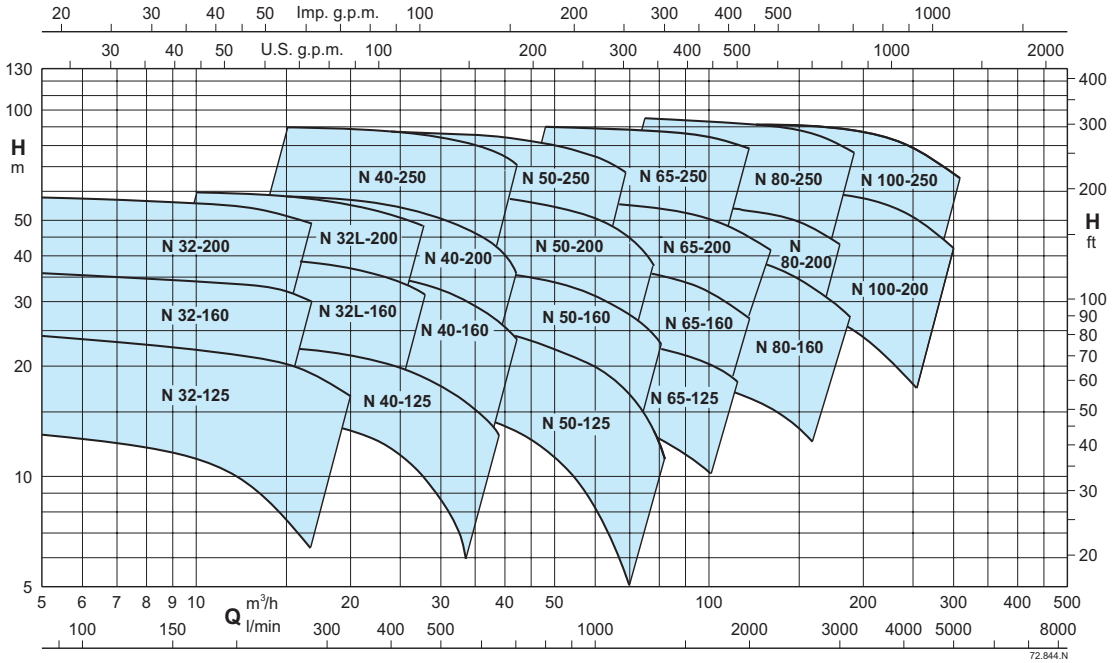


## Coverage chart n ≈ 2900 rpm

### Three-phase

| | | | | Q = Flow | | | | | | | | | | | | | | | | |
|---|---|---|---|---|---|---|---|---|---|---|---|---|---|---|---|---|---|---|---|---|
| | | | | m³/h | 0 | 6,6 | 7,5 | 8,4 | 9,6 | 10,8 | 12 | 13,2 | 15 | 16,8 | 18,9 | 21 | 24 | 27 | 29 | 32 |
| Model | | P2 | | l/min | | 110 | 125 | 140 | 160 | 180 | 200 | 220 | 250 | 280 | 315 | 350 | 400 | 450 | 483 | 533 |
| | | kW | HP | H (m) = Total head | | | | | | | | | | | | | | | | |
| BN | N 32-125F/A | 0,55 | 0,75 | | 13,3 | 12,5 | 12,3 | 12 | 11,6 | 11,1 | 10,4 | 9,5 | 8 | 6 | - | - | - | - | - | - |
| BN | N 32-125D/A | 0,75 | 1 | | 18,4 | 18 | 17,8 | 17,5 | 17,1 | - | - | - | - | - | - | - | - | - | - | - |
| BN | N 32-125D-S/A | 1,1 | 1,5 | | 18,4 | 18 | 17,8 | 17,5 | 17,1 | 16,6 | 16 | 15,3 | 14,1 | 12,7 | 10,8 | 8,6 | - | - | - | - |
| BN | N 32-125A/A | 1,1 | 1,5 | | 24,3 | 23 | 22,8 | 22,5 | 22,1 | 21,6 | 21,1 | 20,4 | - | - | - | - | - | - | - | - |
| BN | N 32-125A-S/A | 1,5 | 2 | | 24,3 | 23 | 22,8 | 22,5 | 22,1 | 21,6 | 21,1 | 20,4 | 19,3 | 18 | 16,2 | 13,9 | 10 | - | - | - |
| BN | N 32-125S/A | 1,5 | 2 | | 25 | 23,6 | 23,2 | 22,8 | 22,4 | 22 | 21,6 | 21,1 | 20,4 | 19,5 | 18,1 | 16,4 | 13,1 | - | - | - |
| BN | N 32-160B/A | 1,5 | 2 | | 29,3 | 29,5 | 29,3 | 29 | 28,4 | 27,8 | 27 | 26,1 | 24,5 | - | - | - | - | - | - | - |
| BN | N 32-160B-S/A | 2,2 | 3 | | 29,3 | 29,5 | 29,3 | 29 | 28,4 | 27,8 | 27 | 26,1 | 24,5 | 22,7 | 20,2 | 17,3 | 12,5 | - | - | - |
| BN | N 32-160A/A | 2,2 | 3 | | 36 | 35,5 | 35,2 | 34,9 | 34,5 | 34,1 | 33,6 | 33 | 31,8 | 30,1 | - | - | - | - | - | - |
| BN | N 32-160A-S/A | 3 | 4 | | 36 | 35,5 | 35,3 | 35,1 | 34,6 | 34,2 | 33,6 | 32,9 | 31,6 | 30,1 | 28 | 25,3 | 20,8 | 15 | - | - |
| BN | N 32-200D/A | 2,2 | 3 | | 41 | 37,5 | 36,7 | 35,9 | 35 | 34,1 | - | - | - | - | - | - | - | - | - | - |
| BN | N 32-200D-S/A | 3 | 4 | | 41 | 37,5 | 36,7 | 35,9 | 35 | 34,1 | 33,1 | 32 | 29,9 | 26,9 | 22,1 | - | - | - | - | - |
| BN | N 32-200C/A | 3 | 4 | | 46,1 | 44,5 | 44 | 43,5 | 42,8 | 42 | 41,2 | 40,2 | 38,3 | 35,9 | 32,1 | - | - | - | - | - |
| BN | N 32-200A/A | 4 | 5,5 | | 58,7 | 57 | 56,5 | 56 | 55,3 | 54,5 | 53,6 | 52,6 | 50,9 | - | - | - | - | - | - | - |
| BN | N 32-200A-S/A | 5,5 | 7,5 | | 58,7 | 57 | 56,5 | 56 | 55,3 | 54,5 | 53,6 | 52,6 | 50,9 | 48,9 | 46,1 | - | - | - | - | - |
| BN | N 32L-160C | 2,2 | 3 | | 25,7 | - | - | - | 25,1 | 24,9 | 24,7 | 24,4 | 23,8 | 23 | 21,8 | 20,3 | 17,3 | 13,4 | - | - |
| BN | N 32L-160B | 3 | 4 | | 30,4 | - | - | - | 30,4 | 30,3 | 30,2 | 30 | 29,6 | 29 | 28,1 | 26,8 | 24,2 | 20,8 | 17,9 | - |
| BN | N 32L-160A | 4 | 5,5 | | 38,5 | - | - | - | 39,9 | 39,9 | 39,8 | 39,6 | 39,3 | 38,8 | 37,9 | 36,8 | 34,7 | 31,9 | 29,7 | 25,6 |
| BN | N 32L-200C | 4 | 5,5 | | 41,3 | - | - | - | 42,1 | 41,9 | 41,5 | 41,1 | 40,1 | 38,9 | 37 | 34,5 | 29,8 | 23,8 | - | - |
| BN | N 32L-200B | 5,5 | 7,5 | | 53 | - | - | - | 51,7 | 51,6 | 51,4 | 51,2 | 50,7 | 50 | 48,7 | 46,9 | 43,2 | 37,9 | 33,4 | - |
| BN | N 32L-200A | 7,5 | 10 | | 57,7 | - | - | - | 59,4 | 59,5 | 59,5 | 59,5 | 59,3 | 58,8 | 57,9 | 56,4 | 53,3 | 48,8 | 44,9 | 37,5 |

**P2:** Rated motor power output.
**H:** Total head in m
Tolerances according to UNI EN ISO 9906:2012

N

calpeda

## Coverage chart n ≈ 2900 rpm

### Three-phase

| | | | | Q = Flow | | | | | | | | | | | | | | |
|---|---|---|---|---|---|---|---|---|---|---|---|---|---|---|---|---|---|---|
| | | | | m³/h | 0 | 15 | 16,8 | 18,9 | 21 | 24 | 27 | 30 | 33 | 37,8 | 39 | 42 | 45 | 48 |
| Model | | P2 | | l/min | | 250 | 280 | 315 | 350 | 400 | 450 | 500 | 550 | 630 | 650 | 700 | 750 | 800 |
| | | kW | HP | H (m) = Total head | | | | | | | | | | | | | | |
| BN | N 40-125F/A | 1,1 | 1,5 | | 14 | 14 | 13,5 | 12,9 | 12,1 | 11 | 9,6 | 7,9 | 6 | - | - | - | - | - |
| BN | N 40-125C/A | 1,5 | 2 | | 17 | 17,5 | 17,1 | 16,6 | 15,9 | 14,9 | 13,6 | 12,1 | 10,4 | 7,4 | 6,6 | - | - | - |
| BN | N 40-125A/A | 2,2 | 3 | | 21,8 | 22 | 21,8 | 21,5 | 21 | 20,1 | 19,1 | 17,9 | 16,4 | 13,9 | 13,2 | 11,4 | - | - |
| BN | N 40-160C/A | 2,2 | 3 | | 23 | 23 | 22,7 | 22,1 | 21,4 | 20 | 18,4 | 16,6 | 14,5 | 11 | 10 | - | - | - |
| BN | N 40-160B/A | 3 | 4 | | 29,9 | 29 | 28,6 | 28,1 | 27,5 | 26,4 | 25,1 | 23,5 | 21,6 | 18 | 16,9 | 14,1 | - | - |
| BN | N 40-160A/A | 4 | 5,5 | | 36 | 37 | 36,7 | 36,4 | 35,8 | 34,9 | 33,7 | 32,2 | 30,4 | 27 | - | - | - | - |
| BN | N 40-160A-S/A | 5,5 | 7,5 | | 36 | 37 | 36,7 | 36,4 | 35,8 | 34,9 | 33,7 | 32,2 | 30,4 | 27 | 26 | 23,3 | 20,3 | 16,9 |
| BN | N 40-200D/A | 4 | 5,5 | | 41 | 39 | 38,1 | 37 | 35,6 | 33,3 | 30,5 | - | - | - | - | - | - | - |
| BN | N 40-200C/A | 4 | 5,5 | | 43 | 41,5 | 40,6 | 39,4 | 38,1 | - | - | - | - | - | - | - | - | - |
| BN | N 40-200C-S/A | 5,5 | 7,5 | | 43 | 41,5 | 40,6 | 39,4 | 38,1 | 36 | 33,5 | - | - | - | - | - | - | - |
| BN | N 40-200D-S/A | 5,5 | 7,5 | | 41 | 39 | 38,1 | 37 | 35,6 | 33,3 | 30,5 | 26,9 | 22,7 | 14 | - | - | - | - |
| BN | N 40-200B/A | 5,5 | 7,5 | | 50,5 | 50 | 49,3 | 48,4 | 47,4 | 45,8 | 43,7 | 41 | 37,7 | - | - | - | - | - |
| BN | N 40-200B-S/A | 7,5 | 10 | | 50,5 | 50 | 49,3 | 48,4 | 47,4 | 45,8 | 43,7 | 41 | 37,7 | 30,5 | - | - | - | - |
| BN | N 40-200AR/A | 5,5 | 7,5 | | 55 | 55 | 54,7 | 53,9 | 52,9 | 51,1 | - | - | - | - | - | - | - | - |
| BN | N 40-200AR-S/A | 7,5 | 10 | | 55 | 55 | 54,7 | 53,9 | 52,9 | 51,1 | 49 | - | - | - | - | - | - | - |
| BN | N 40-200A/A | 7,5 | 10 | | 57,5 | 57,5 | 57 | 56,3 | 55,5 | 54,3 | 52,7 | 50,7 | 48 | 42,2 | 40,4 | 35,2 | - | - |
| BN | N 40-250C/A | 11 | 15 | | 62 | 61 | 60,9 | 60,6 | 59,9 | 58,4 | 56,2 | 53,3 | 49,6 | 42 | 39,7 | 33,4 | - | - |
| BN | N 40-250B/A | 11 | 15 | | 70 | 69,5 | 69,3 | 68,9 | 68,4 | 67,3 | 65,7 | 63,4 | 60,3 | 53,4 | 51,2 | 44,9 | - | - |
| BN | N 40-250A/A | 15 | 20 | | 90 | 90 | 89,8 | 89,5 | 89,1 | 88,3 | 87,1 | 85,3 | 82,9 | 77,5 | 75,7 | 70,7 | - | - |

### Three-phase

| | | | | Q = Flow | | | | | | | | | | | | | | | |
|---|---|---|---|---|---|---|---|---|---|---|---|---|---|---|---|---|---|---|---|
| | | | | m³/h | 0 | 24 | 27 | 30 | 33 | 37,8 | 42 | 48 | 54 | 60 | 66 | 69 | 72 | 75 | 78 | 81 |
| Model | | P2 | | l/min | | 400 | 450 | 500 | 550 | 630 | 700 | 800 | 900 | 1000 | 1100 | 1150 | 1200 | 1250 | 1300 | 1350 |
| | | kW | HP | H (m) = Total head | | | | | | | | | | | | | | | | |
| BN | N 50-125F/A | 2,2 | 3 | | 16,5 | - | - | 15,5 | 15,1 | 14,2 | 13,3 | 11,8 | 10,1 | 8,1 | 5,9 | - | - | - | - | - |
| BN | N 50-125D/A | 3 | 4 | | 20,5 | - | - | 20 | 19,5 | 18,7 | 17,8 | 16,4 | 14,7 | 12,8 | 10,5 | 9,2 | 7,9 | - | - | - |
| BN | N 50-125A/A | 4 | 5,5 | | 24,1 | - | - | 24 | 23,8 | 23,2 | 22,5 | 21,1 | 19,4 | 17,4 | 15,1 | 13,9 | 12,7 | 11,4 | 10 | - |
| BN | N 50-125S/A | 4 | 5,5 | | 27,6 | - | - | 26,5 | 26,1 | 25,4 | 24,7 | 23,4 | 21,9 | - | - | - | - | - | - | - |
| BN | N 50-125S-S/A | 5,5 | 7,5 | | 27,6 | - | - | 26,5 | 26,1 | 25,4 | 24,7 | 23,4 | 21,9 | 20 | 17,9 | 16,7 | 15,5 | 14,1 | 12,7 | 11,1 |
| BN | N 50-160B/A | 5,5 | 7,5 | | 30,5 | - | - | 31 | 30,3 | 29,2 | 28 | 26,2 | 24,1 | 21,7 | 18,8 | 17,2 | 15,5 | 13,6 | 11,6 | 9,5 |
| BN | N 50-160A/A | 7,5 | 10 | | 38 | - | - | 38,5 | 38,2 | 37,4 | 36,4 | 34,7 | 32,5 | 29,9 | 27,1 | 25,5 | 24 | 22,3 | 20,7 | 19 |
| BN | N 50-200B/A | 11 | 15 | | 48,4 | 48 | 47,7 | 47,3 | 46,8 | 45,7 | 44,6 | 42,6 | 40 | 36,7 | 32,9 | 30,6 | 28,2 | 25,6 | 22,8 | - |
| BN | N 50-200A/A | 11 | 15 | | 54 | 55 | 54,9 | 54,6 | 54,2 | 53,3 | 52,3 | 50,3 | 47,9 | 44,9 | 41,4 | 39,4 | 37,2 | 35 | 32,5 | - |
| BN | N 50-200S/A | 15 | 20 | | 59 | 60 | 59,8 | 59,6 | 59,2 | 58,4 | 57,5 | 55,8 | 53,5 | 50,6 | 47 | 45 | 42,7 | 40,2 | 37,5 | - |
| BN | N 50-250C/A | 11 | 15 | | 55,1 | 55 | 54,5 | 53,9 | 53,1 | 51,4 | 49,5 | 46 | 41,4 | 35,6 | 28,5 | 24,5 | - | - | - | - |
| BN | N 50-250B/A | 15 | 20 | | 69 | 69 | 68,6 | 68 | 67,3 | 65,8 | 64,2 | 61,1 | 57,1 | 52,3 | 46,4 | 43,1 | - | - | - | - |
| BN | N 50-250A/A | 18,5 | 25 | | 80 | 80,5 | 80,3 | 80 | 79,5 | 78,4 | 77,1 | 74,6 | 71,3 | 67 | 61,6 | 58,5 | - | - | - | - |
| BN | N 50-250S/A | 22 | 30 | | 89 | 88,5 | 88,2 | 87,8 | 87,1 | 85,8 | 84,3 | 81,6 | 78,5 | 74,9 | 70,8 | 68,7 | - | - | - | - |

**P2:** Rated motor power output.
**H:** Total head in m
Tolerances according to UNI EN ISO 9906:2012

N

calpeda®

## Coverage chart n ≈ 2900 rpm

### Three-phase

| | | | | Q = Flow | | | | | | | | | | | | | | |
|---|---|---|---|---|---|---|---|---|---|---|---|---|---|---|---|---|---|---|
| | | | | m³/h | 0 | 37,8 | 42 | 48 | 54 | 60 | 66 | 75 | 84 | 96 | 108 | 120 | 132 | 141 |
| Model | | P2 | | l/min | | 630 | 700 | 800 | 900 | 1000 | 1100 | 1250 | 1400 | 1600 | 1800 | 2000 | 2200 | 2350 |
| | | kW | HP | H (m) = Total head | | | | | | | | | | | | | | |
| BN | N 65-125E/B | 4 | 5,5 | | 16,2 | 16,5 | 16,4 | 16,2 | 15,9 | 15,5 | 15,1 | 14,3 | 13,2 | 11,4 | 9,2 | - | - | - |
| BN | N 65-125C/B | 5,5 | 7,5 | | 20,8 | 21,1 | 21 | 20,8 | 20,6 | 20,3 | 19,9 | 19,1 | 18,2 | 16,5 | 14,4 | 11,8 | - | - |
| BN | N 65-125A/B | 7,5 | 10 | | 26 | 25,9 | 25,8 | 25,6 | 25,4 | 25,1 | 24,8 | 24,1 | 23,3 | 21,9 | 20 | 17,6 | - | - |
| BN | N 65-160D/B | 7,5 | 10 | | 24 | - | - | 24,3 | 24,1 | 23,9 | 23,6 | 23,1 | 22,3 | 20,8 | 18,8 | 16,3 | - | - |
| BN | N 65-160C/B | 11 | 15 | | 27,8 | - | - | 28,1 | 28 | 27,8 | 27,6 | 27,1 | 26,3 | 24,9 | 23,1 | 20,7 | 17,7 | - |
| BN | N 65-160B/B | 11 | 15 | | 31,8 | - | - | 32,6 | 32,5 | 32,3 | 32 | 31,5 | 30,8 | 29,5 | 27,9 | 25,7 | 23 | - |
| BN | N 65-160A/B | 15 | 20 | | 38,8 | - | - | 40,5 | 40,4 | 40,2 | 40 | 39,5 | 38,8 | 37,6 | 36,1 | 34,1 | 31,7 | - |
| BN | N 65-160AR | 15 | 20 | | 35,8 | - | - | 36,4 | 36,3 | 36,2 | 35,9 | 35,5 | 34,8 | 33,7 | 32,1 | 30 | 27,5 | - |
| BN | N 65-200C/B | 15 | 20 | | 41 | - | - | 44 | 43,8 | 43,5 | 43,1 | 42,3 | 41,2 | 39,4 | 37,1 | 34,4 | 31,4 | 28,8 |
| BN | N 65-200B/B | 18,5 | 25 | | 47 | - | - | 50,5 | 50,4 | 50,2 | 49,9 | 49,2 | 48,3 | 46,8 | 44,8 | 42,5 | 39,8 | 37,5 |
| BN | N 65-200A/B | 22 | 30 | | 54 | - | - | 57 | 57 | 56,9 | 56,6 | 56,1 | 55,4 | 54 | 52,3 | 50,1 | 47,6 | 45,4 |
| BN | N 65-250C/B | 22 | 30 | | 56 | - | - | 61 | 60,8 | 60,4 | 59,8 | 58,7 | 57,2 | 54,6 | 51,3 | 47,5 | 43 | - |
| BN | N 65-250B/B | 30 | 40 | | 68 | - | - | 73,5 | 73,7 | 73,7 | 73,5 | 72,8 | 71,6 | 69,4 | 66,6 | 63,1 | 59 | - |
| BN | N 65-250A/B | 37 | 50 | | 80 | - | - | 86,5 | 86,7 | 86,8 | 86,7 | 86,1 | 85,2 | 83,5 | 81,1 | 78,1 | 74,5 | - |

### Three-phase

| | | | | Q = Flow | | | | | | | | | | | | | | |
|---|---|---|---|---|---|---|---|---|---|---|---|---|---|---|---|---|---|---|
| | | | | m³/h | 0 | 75 | 84 | 96 | 108 | 120 | 132 | 150 | 168 | 180 | 192 | 210 | 240 | 270 | 300 |
| Model | | P2 | | l/min | | 1250 | 1400 | 1600 | 1800 | 2000 | 2200 | 2500 | 2800 | 3000 | 3200 | 3500 | 4000 | 4500 | 5000 |
| | | kW | HP | H (m) = Total head | | | | | | | | | | | | | | | |
| BN | N 80-160E/B | 7,5 | 10 | | 23 | 21,5 | 20,9 | 19,9 | 18,7 | 17,4 | 15,9 | 13,4 | 10,6 | - | - | - | - | - | - |
| BN | N 80-160D/B | 11 | 15 | | 26 | 25,2 | 24,5 | 23,5 | 22,4 | 21,1 | 19,6 | 17,2 | 14,4 | - | - | - | - | - | - |
| BN | N 80-160C/B | 11 | 15 | | 29 | 28,7 | 28,2 | 27,4 | 26,4 | 25,1 | 23,8 | 21,3 | 18,5 | 16,4 | - | - | - | - | - |
| BN | N 80-160B/B | 15 | 20 | | 35 | 34,8 | 34,5 | 33,8 | 33 | 32,1 | 30,9 | 28,9 | 26,4 | 24,5 | 22,4 | - | - | - | - |
| BN | N 80-160A/B | 18,5 | 25 | | 40 | 39,9 | 39,6 | 39 | 38,2 | 37,4 | 36,4 | 34,5 | 32,2 | 30,3 | 28,1 | - | - | - | - |
| BN | N 80-200B/B | 22 | 30 | | 42 | 44,4 | 43,9 | 43,2 | 42,4 | 41,5 | 40,5 | 38,6 | 36,4 | 34,6 | 32,5 | - | - | - | - |
| BN | N 80-200A/B | 30 | 40 | | 54,2 | 56,6 | 56,3 | 55,8 | 55,2 | 54,4 | 53,5 | 51,7 | 49,4 | 47,7 | 45,6 | - | - | - | - |
| BN | N 80-250E/A | 22 | 30 | | 52 | 51 | 50 | 48,4 | 46,6 | 44,5 | 42,1 | 37,9 | 32,9 | 29,1 | - | - | - | - | - |
| BN | N 80-250D/A | 30 | 40 | | 65 | 65 | 63,9 | 62,4 | 60,8 | 58,9 | 56,9 | 53,2 | 48,7 | 45,2 | 41,2 | - | - | - | - |
| BN | N 80-250C/A | 37 | 50 | | 74 | 73,5 | 72,9 | 71,9 | 70,6 | 68,9 | 66,9 | 63,3 | 58,8 | 55,4 | 51,6 | - | - | - | - |
| BN | N 80-250B/A | 45 | 60 | | 84 | 84 | 83,5 | 82,6 | 81,4 | 79,9 | 78,1 | 74,7 | 70,4 | 66,9 | 63,1 | - | - | - | - |
| BN | N 80-250A/A | 55 | 75 | | 95 | 95 | 94,3 | 93,4 | 92,5 | 91,5 | 90,2 | 87,5 | 83,8 | 80,5 | 76,5 | - | - | - | - |
| BN | N 100-200E/A | 18,5 | 25 | | 30 | - | - | - | 33 | 32,8 | 32,3 | 31,1 | 29,5 | 28,1 | 26,6 | 24 | 19,1 | - | - |
| BN | N 100-200D/A | 22 | 30 | | 36 | - | - | - | 38,8 | 38,4 | 37,9 | 36,8 | 35,2 | 33,8 | 32,2 | 29,3 | 23,8 | - | - |
| BN | N 100-200C/A | 30 | 40 | | 45,8 | - | - | - | 45 | 44,6 | 44,2 | 43,4 | 42,4 | 41,6 | 40,5 | 38,7 | 34,6 | 29,1 | 21,9 |
| BN | N 100-200B/A | 37 | 50 | | 54 | - | - | - | 54 | 53,6 | 53,2 | 52,4 | 51,4 | 50,6 | 49,6 | 47,8 | 43,9 | 38,7 | 31,9 |
| BN | N 100-200A/A | 45 | 60 | | 62 | - | - | - | 61,5 | 61,1 | 60,8 | 60,1 | 59,3 | 58,6 | 57,8 | 56,4 | 53 | 48,3 | 41,9 |
| BN | N 100-250B/A | 55 | 75 | | 73 | - | - | - | 73,5 | 73 | 72,4 | 71,2 | 69,8 | 68,7 | 67,4 | 65,2 | 60,8 | 55,3 | 48,6 |
| BN | N 100-250A/A | 75 | 100 | | 90,8 | - | - | - | 91 | 90,6 | 90,2 | 89,5 | 88,6 | 87,8 | 86,9 | 85,1 | 81 | 75,1 | 66,9 |

**P2:** Rated motor power output.
**H:** Total head in m
Tolerances according to UNI EN ISO 9906:2012

N

## Coverage chart n ≈ 1450 rpm

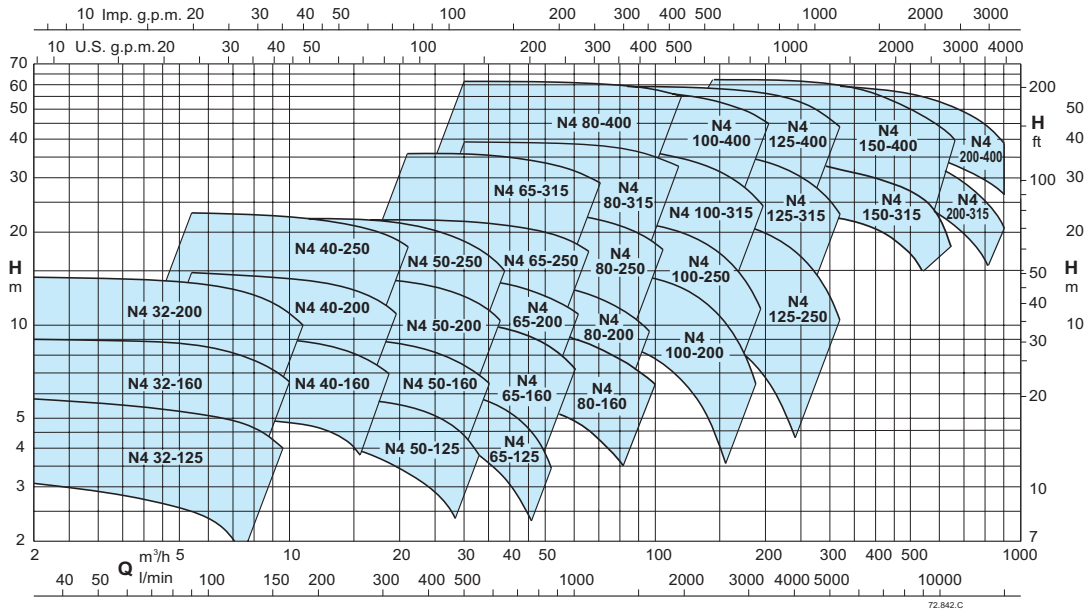


## Performance n ≈ 1450 rpm

### Three-phase

| | | | | Q = Flow | | | | | | | | | | | | | | | |
|---|---|---|---|---|---|---|---|---|---|---|---|---|---|---|---|---|---|---|---|
| | | | | m³/h | 0 | 2,4 | 3 | 3,6 | 4,2 | 4,8 | 5,4 | 6 | 6,6 | 7,5 | 8,4 | 9,6 | 10,8 | 12 | 13,2 |
| Model | | P2 | | l/min | | 40 | 50 | 60 | 70 | 80 | 90 | 100 | 110 | 125 | 140 | 160 | 180 | 200 | 220 |
| | | kW | HP | H (m) = Total head | | | | | | | | | | | | | | | |
| BN4 | N4 32-125F/A | 0,25 | 0,34 | | 3,3 | 3,6 | 3,6 | 3,6 | 3,5 | 3,4 | 3,2 | 3 | 2,8 | 2,4 | 1,9 | 1,1 | - | - | - |
| BN4 | N4 32-125D/A | 0,25 | 0,34 | | 4,5 | 4,7 | 4,7 | 4,7 | 4,7 | 4,6 | 4,6 | 4,5 | 4,3 | 4,1 | 3,8 | 3,3 | 2,6 | - | - |
| BN4 | N4 32-125A/A | 0,25 | 0,34 | | 5,5 | 5,7 | 5,7 | 5,7 | 5,7 | 5,7 | 5,7 | 5,6 | 5,5 | 5,4 | 5,2 | 4,8 | 4,3 | - | - |
| BN4 | N4 32-160B/A | 0,37 | 0,5 | | 7,6 | 7,6 | 7,5 | 7,4 | 7,3 | 7,2 | 7,1 | 6,9 | 6,7 | 6,3 | 5,9 | 5,2 | 4,2 | - | - |
| BN4 | N4 32-160A/A | 0,37 | 0,5 | | 9 | 9 | 9 | 8,9 | 8,8 | 8,7 | 8,6 | 8,4 | 8,3 | 7,9 | 7,5 | 6,8 | 6 | 5,1 | - |
| BN4 | N4 32-200B/A | 0,55 | 0,75 | | 12,2 | 12,5 | 12,4 | 12,4 | 12,2 | 12 | 11,8 | 11,5 | 11,2 | 10,6 | 9,9 | 8,9 | 7,7 | 6,2 | 4,7 |
| BN4 | N4 32-200A/A | 0,75 | 1 | | 14,2 | 14,3 | 14,2 | 14,2 | 14,1 | 13,9 | 13,7 | 13,5 | 13,3 | 12,8 | 12,2 | 11,3 | 10,3 | 9 | 7,4 |

### Three-phase

| | | | | Q = Flow | | | | | | | | | | | | | | | | | |
|---|---|---|---|---|---|---|---|---|---|---|---|---|---|---|---|---|---|---|---|---|---|
| | | | | m³/h | 0 | 5,4 | 6 | 6,6 | 7,5 | 8,4 | 9,6 | 10,8 | 12 | 13,2 | 15 | 16,8 | 18,9 | 21 | 24 | 27 | 30 |
| Model | | P2 | | l/min | | 90 | 100 | 110 | 125 | 140 | 160 | 180 | 200 | 220 | 250 | 280 | 315 | 350 | 400 | 450 | 500 |
| | | kW | HP | H (m) = Total head | | | | | | | | | | | | | | | | | |
| BN4 | N4 40-160C/A | 0,37 | 0,5 | | 5,9 | 6,1 | 6 | 6 | 5,9 | 5,8 | 5,6 | 5,4 | 5,2 | 4,9 | 4,5 | 3,9 | 3,2 | 2,3 | - | - | - |
| BN4 | N4 40-160B/A | 0,55 | 0,75 | | 7,1 | 7,6 | 7,6 | 7,6 | 7,5 | 7,5 | 7,3 | 7,2 | 6,9 | 6,7 | 6,2 | 5,7 | 4,9 | 4,1 | 2,7 | - | - |
| BN4 | N4 40-160A/A | 0,75 | 1 | | 9,4 | 9,6 | 9,6 | 9,6 | 9,5 | 9,4 | 9,3 | 9,2 | 9 | 8,8 | 8,4 | 7,9 | 7,2 | 6,4 | 5,1 | 3,5 | - |
| BN4 | N4 40-200B/A | 1,1 | 1,5 | | 13 | 13 | 12,9 | 12,9 | 12,7 | 12,6 | 12,4 | 12,2 | 11,9 | 11,5 | 10,8 | 10 | 8,7 | 7 | - | - | - |
| BN4 | N4 40-200A/A | 1,1 | 1,5 | | 14,9 | 14,8 | 14,7 | 14,6 | 14,5 | 14,4 | 14,2 | 14 | 13,8 | 13,5 | 13 | 12,3 | 11,3 | 10 | - | - | - |
| BN4 | N4 40-250C/A | 1,5 | 2 | | 17,2 | 17,4 | 17,3 | 17,3 | 17,2 | 17,1 | 16,9 | 16,6 | 16,2 | 15,8 | 14,9 | 13,9 | 12,3 | 10,4 | 7,1 | 2,8 | - |
| BN4 | N4 40-250B/A | 2,2 | 3 | | 21,4 | 21,4 | 21,4 | 21,4 | 21,3 | 21,3 | 21,2 | 21 | 20,8 | 20,5 | 20 | 19,2 | 18,1 | 16,5 | 13,7 | 9,9 | 5 |
| BN4 | N4 40-250A/A | 3 | 4 | | 22,8 | 22,9 | 22,9 | 22,8 | 22,8 | 22,7 | 22,6 | 22,5 | 22,4 | 22,2 | 21,7 | 21,2 | 20,2 | 18,9 | 16,3 | 12,7 | 7,9 |

**P2:** Rated motor power output.
**H:** Total head in m
Tolerances according to UNI EN ISO 9906:2012

## Performance n ≈ 1450 rpm

### Three-phase

| | | | | Q = Flow | | | | | | | | | | | | | | | |
|---|---|---|---|---|---|---|---|---|---|---|---|---|---|---|---|---|---|---|---|
| | | | | m³/h | 0 | 10,8 | 12 | 13,2 | 15 | 16,8 | 18,9 | 21 | 24 | 27 | 30 | 33 | 37,8 | 42 | 48 |
| Model | | P2 | | l/min | | 180 | 200 | 220 | 250 | 280 | 315 | 350 | 400 | 450 | 500 | 550 | 630 | 700 | 800 |
| | | kW | HP | H (m) = Total head | | | | | | | | | | | | | | | |
| BN4 | N4 50-125F/A | 0,37 | 0,5 | | 4,5 | 4,5 | 4,5 | 4,4 | 4,3 | 4,1 | 3,8 | 3,5 | 2,9 | 2,2 | 1,4 | 0,5 | - | - | - |
| BN4 | N4 50-125D/A | 0,55 | 0,75 | | 5,4 | 5,5 | 5,5 | 5,5 | 5,4 | 5,2 | 5,1 | 4,8 | 4,4 | 3,8 | 3,2 | 2,5 | - | - | - |
| BN4 | N4 50-125A/A | 0,75 | 1 | | 6,3 | 6,4 | 6,4 | 6,4 | 6,3 | 6,2 | 6,1 | 5,9 | 5,6 | 5,2 | 4,6 | 4 | 2,9 | - | - |
| BN4 | N4 50-125S/A | 0,75 | 1 | | 6,7 | 6,8 | 6,8 | 6,8 | 6,8 | 6,7 | 6,6 | 6,4 | 6,2 | 5,8 | 5,3 | 4,8 | 3,8 | - | - |
| BN4 | N4 50-160B/A | 1,1 | 1,5 | | 8 | 8,2 | 8,2 | 8,2 | 8,1 | 8 | 7,8 | 7,6 | 7,2 | 6,7 | 6,2 | 5,5 | 4,4 | 3,3 | - |
| BN4 | N4 50-160A/A | 1,1 | 1,5 | | 9,5 | 9,6 | 9,6 | 9,6 | 9,5 | 9,5 | 9,3 | 9,1 | 8,8 | 8,3 | 7,8 | 7,2 | 6,1 | 4,9 | 3,1 |
| BN4 | N4 50-200C/A | 1,1 | 1,5 | | 11,3 | 11,8 | 11,8 | 11,7 | 11,7 | 11,5 | 11,3 | 11 | 10,4 | 9,8 | 9 | 8,1 | 6,4 | 4,7 | - |
| BN4 | N4 50-200B/A | 1,5 | 2 | | 13 | 13,4 | 13,4 | 13,4 | 13,3 | 13,1 | 12,9 | 12,6 | 12,1 | 11,5 | 10,7 | 9,9 | 8,2 | 6,5 | 3,7 |
| BN4 | N4 50-200A/A | 2,2 | 3 | | 14,4 | 14,9 | 14,9 | 14,9 | 14,9 | 14,8 | 14,6 | 14,4 | 14 | 13,4 | 12,8 | 11,9 | 10,4 | 8,7 | 6 |
| BN4 | N4 50-250C/A | 2,2 | 3 | | 17,2 | 17,8 | 17,7 | 17,6 | 17,4 | 17,2 | 16,9 | 16,5 | 15,7 | 14,8 | 13,7 | 12,4 | 9,7 | 6,8 | - |
| BN4 | N4 50-250D | 2,2 | 3 | | 14,5 | 14,5 | 14,4 | 14,3 | 14,1 | 13,8 | 13,4 | 12,9 | 12,1 | 11 | 9,8 | 8,3 | 5,4 | 2,3 | - |
| BN4 | N4 50-250B/A | 3 | 4 | | 20,2 | 20,7 | 20,7 | 20,6 | 20,5 | 20,3 | 20 | 19,7 | 19 | 18,1 | 17,1 | 15,8 | 13,3 | 10,6 | 5,8 |
| BN4 | N4 50-250A/A | 4 | 5,5 | | 24,2 | 22,7 | 22,7 | 22,6 | 22,4 | 22,2 | 22 | 21,7 | 21,1 | 20,4 | 19,5 | 18,4 | 16,1 | 13,6 | 9,1 |

### Three-phase

| | | | | Q = Flow | | | | | | | | | | | | | | | |
|---|---|---|---|---|---|---|---|---|---|---|---|---|---|---|---|---|---|---|---|
| | | | | m³/h | 0 | 21 | 24 | 27 | 30 | 33 | 37,8 | 42 | 48 | 54 | 60 | 66 | 75 | 84 | 96 |
| Model | | P2 | | l/min | | 350 | 400 | 450 | 500 | 550 | 630 | 700 | 800 | 900 | 1000 | 1100 | 1250 | 1400 | 1600 |
| | | kW | HP | H (m) = Total head | | | | | | | | | | | | | | | |
| BN4 | N4 65-125E/B | 0,75 | 1 | | 4,2 | 4,1 | 4,1 | 4 | 3,9 | 3,8 | 3,6 | 3,3 | 2,9 | 2,3 | - | - | - | - | - |
| BN4 | N4 65-125C/B | 0,75 | 1 | | 5,2 | 5,3 | 5,2 | 5,2 | 5,1 | 5 | 4,8 | 4,6 | 4,1 | 3,6 | 3 | - | - | - | - |
| BN4 | N4 65-125A/B | 1,1 | 1,5 | | 6,5 | 6,5 | 6,4 | 6,4 | 6,3 | 6,2 | 6 | 5,8 | 5,5 | 5 | 4,4 | - | - | - | - |
| BN4 | N4 65-160C/B | 1,1 | 1,5 | | 6,4 | 6,1 | 6,1 | 6 | 6 | 5,9 | 5,8 | 5,6 | 5,3 | 4,8 | 4,2 | - | - | - | - |
| BN4 | N4 65-160B/B | 1,1 | 1,5 | | 7,4 | 7,2 | 7,1 | 7,1 | 7 | 7 | 6,8 | 6,6 | 6,3 | 5,8 | 5,2 | 4,5 | - | - | - |
| BN4 | N4 65-160A/B | 1,5 | 2 | | 8,8 | 8,8 | 8,8 | 8,7 | 8,7 | 8,6 | 8,5 | 8,3 | 8 | 7,6 | 7,1 | 6,4 | 5,2 | - | - |
| BN4 | N4 65-160S | 2,2 | 3 | | 9,9 | 10,2 | 10,2 | 10,1 | 10,1 | 10 | 9,9 | 9,7 | 9,4 | 9,1 | 8,6 | 8 | 7 | 5,7 | - |
| BN4 | N4 65-200B/B | 2,2 | 3 | | 11,1 | 11,7 | 11,7 | 11,6 | 11,6 | 11,5 | 11,3 | 11 | 10,6 | 10,1 | 9,5 | 8,7 | 7,4 | 5,8 | 3,3 |
| BN4 | N4 65-200A/B | 3 | 4 | | 13,8 | 14,2 | 14,2 | 14,2 | 14,1 | 14,1 | 13,9 | 13,7 | 13,4 | 13 | 12,5 | 11,8 | 10,7 | 9,3 | 7 |
| BN4 | N4 65-250B/B | 4 | 5,5 | | 16,5 | 17,9 | 18 | 18 | 18 | 18 | 17,8 | 17,5 | 17 | 16,3 | 15,4 | 14,4 | 12,5 | 10,4 | 7 |
| BN4 | N4 65-250A/B | 5,5 | 7,5 | | 21 | 22,2 | 22,3 | 22,4 | 22,4 | 22,4 | 22,2 | 22 | 21,6 | 21 | 20,2 | 19,3 | 17,6 | 15,7 | 12,6 |
| BN4 | N4 65-315C/A | 5,5 | 7,5 | | 26 | 25,8 | 25,7 | 25,5 | 25,3 | 25 | 24,4 | 23,8 | 22,8 | 21,5 | 20 | 18,2 | 15 | 11 | - |
| BN4 | N4 65-315B/A | 7,5 | 10 | | 31 | 31 | 31 | 30,9 | 30,8 | 30,6 | 30,2 | 29,7 | 28,8 | 27,8 | 26,5 | 25 | 22,2 | 18,6 | - |
| BN4 | N4 65-315A/A | 11 | 15 | | 36 | 35,9 | 35,9 | 35,8 | 35,7 | 35,5 | 35,1 | 34,6 | 33,8 | 32,8 | 31,6 | 30,2 | 27,8 | 25 | - |

### Three-phase

| | | | | Q = Flow | | | | | | | | | | | | | | | | | | |
|---|---|---|---|---|---|---|---|---|---|---|---|---|---|---|---|---|---|---|---|---|---|---|
| | | | | m³/h | 0 | 30 | 33 | 37,8 | 42 | 48 | 54 | 60 | 66 | 75 | 84 | 96 | 108 | 120 | 132 | 150 | 168 | 180 |
| Model | | P2 | | l/min | | 500 | 550 | 630 | 700 | 800 | 900 | 1000 | 1100 | 1250 | 1400 | 1600 | 1800 | 2000 | 2200 | 2500 | 2800 | 3000 |
| | | kW | HP | H (m) = Total head | | | | | | | | | | | | | | | | | | |
| BN4 | N4 80-160C/B | 1,1 | 1,5 | | 6,5 | 6,1 | 6 | 5,9 | 5,8 | 5,5 | 5,2 | 4,9 | 4,6 | 4 | 3,3 | - | - | - | - | - | - | - |
| BN4 | N4 80-160B/B | 1,5 | 2 | | 8,2 | 7,8 | 7,7 | 7,6 | 7,5 | 7,3 | 7 | 6,8 | 6,4 | 5,9 | 5,2 | 4,1 | - | - | - | - | - | - |
| BN4 | N4 80-160A/B | 2,2 | 3 | | 10,1 | 10 | 10 | 9,9 | 9,8 | 9,7 | 9,5 | 9,3 | 9 | 8,5 | 8 | 7 | 5,9 | - | - | - | - | - |
| BN4 | N4 80-200C/B | 2,2 | 3 | | 8,7 | 9 | 9 | 8,9 | 8,8 | 8,7 | 8,5 | 8,2 | 7,9 | 7,4 | 6,8 | 5,7 | 4,3 | 2,7 | - | - | - | - |
| BN4 | N4 80-200B/B | 3 | 4 | | 11,2 | 11,7 | 11,7 | 11,7 | 11,6 | 11,5 | 11,3 | 11,1 | 10,8 | 10,3 | 9,7 | 8,7 | 7,4 | 5,9 | 4,1 | - | - | - |
| BN4 | N4 80-200A/B | 4 | 5,5 | | 13,8 | 14,2 | 14,2 | 14,1 | 14 | 13,9 | 13,7 | 13,5 | 13,2 | 12,7 | 12,1 | 11,1 | 9,9 | 8,5 | 6,9 | - | - | - |
| BN4 | N4 80-250C/A | 4 | 5,5 | | 17 | 16,9 | 16,8 | 16,7 | 16,6 | 16,3 | 15,9 | 15,4 | 14,8 | 13,9 | 12,8 | 11,1 | 9,2 | 7,2 | - | - | - | - |
| BN4 | N4 80-250B/A | 5,5 | 7,5 | | 20,8 | 20,7 | 20,7 | 20,6 | 20,5 | 20,3 | 20 | 19,6 | 19,1 | 18,2 | 17,1 | 15,4 | 13,5 | 11,4 | 9 | - | - | - |
| BN4 | N4 80-250A/A | 7,5 | 10 | | 23,8 | 23,7 | 23,7 | 23,6 | 23,5 | 23,3 | 23 | 22,7 | 22,2 | 21,5 | 20,5 | 19 | 17,2 | 15,1 | 12,7 | - | - | - |
| BN4 | N4 80-315C/B | 11 | 15 | | 24,2 | 25,7 | 25,8 | 25,8 | 25,8 | 25,8 | 25,6 | 25,4 | 25,1 | 24,4 | 23,6 | 22,2 | 20,4 | 18,3 | 15,9 | - | - | - |
| BN4 | N4 80-315B/B | 11 | 15 | | 28,3 | 30,3 | 30,4 | 30,6 | 30,7 | 30,7 | 30,7 | 30,5 | 30,2 | 29,6 | 28,8 | 27,5 | 25,9 | 24,1 | 22 | - | - | - |
| BN4 | N4 80-315A/B | 15 | 20 | | 34,8 | 36,3 | 36,4 | 36,5 | 36,5 | 36,6 | 36,5 | 36,3 | 36,1 | 35,7 | 35 | 33,9 | 32,5 | 30,9 | 28,9 | 25,4 | - | - |
| BN4 | N4 80-315S | 18,5 | 25 | | 38 | 39,2 | 39,2 | 39,3 | 39,3 | 39,4 | 39,3 | 39,2 | 39,1 | 38,7 | 38,2 | 37,2 | 35,9 | 34,2 | 32,1 | 28 | 22,8 | - |
| BN4 | N4 80-400C/B | 18,5 | 25 | | 42 | 42,8 | 42,8 | 42,9 | 42,9 | 42,7 | 42,5 | 42,2 | 41,8 | 40,9 | 39,8 | 37,9 | 35,4 | 32,5 | 29 | - | - | - |
| BN4 | N4 80-400B/B | 22 | 30 | | 45,8 | 48,2 | 48,2 | 48,2 | 48,2 | 48,1 | 47,9 | 47,7 | 47,3 | 46,6 | 45,7 | 44,1 | 42,1 | 39,5 | 36,3 | 30,5 | - | - |
| BN4 | N4 80-400A/B | 30 | 40 | | 60 | 61,4 | 61,5 | 61,5 | 61,6 | 61,5 | 61,5 | 61,3 | 61,1 | 60,7 | 60,1 | 59 | 57,6 | 55,8 | 53,6 | 49,5 | - | - |
| BN4 | N4 80-400S | 37 | 50 | | 60 | 61,5 | 61,5 | 61,5 | 61,5 | 61,5 | 61,4 | 61,3 | 61,1 | 60,7 | 60,1 | 59,1 | 57,7 | 55,9 | 53,7 | 49,3 | 43,8 | 39,3 |

N

calpeda®

## Performance n ≈ 1450 rpm

### Three-phase

| Model | | P2 | | Q = Flow | | | | | | | | | | | | | | | | |
|---|---|---|---|---|---|---|---|---|---|---|---|---|---|---|---|---|---|---|---|---|
| | | | | m³/h | 0 | 48 | 54 | 60 | 66 | 75 | 84 | 96 | 108 | 120 | 132 | 150 | 168 | 180 | 192 | 210 |
| | | | | l/min | | 800 | 900 | 1000 | 1100 | 1250 | 1400 | 1600 | 1800 | 2000 | 2200 | 2500 | 2800 | 3000 | 3200 | 3500 |
| | | kW | HP | H (m) = Total head | | | | | | | | | | | | | | | | |
| BN4 | N4 100-200C/A | 3 | 4 | | 9,3 | 9,4 | 9,3 | 9,2 | 9,1 | 8,9 | 8,5 | 8 | 7,3 | 6,5 | 5,6 | 4 | - | - | - | - |
| BN4 | N4 100-200B/A | 4 | 5,5 | | 12 | 12 | 11,9 | 11,8 | 11,7 | 11,5 | 11,2 | 10,7 | 10,1 | 9,3 | 8,4 | 6,7 | 4,5 | - | - | - |
| BN4 | N4 100-200A/A | 5,5 | 7,5 | | 15,1 | 15,2 | 15,2 | 15,1 | 15,1 | 14,9 | 14,7 | 14,3 | 13,7 | 13,1 | 12,2 | 10,8 | 8,9 | 7,5 | 6 | - |
| BN4 | N4 100-250B/A | 7,5 | 10 | | 19,3 | 19,5 | 19,5 | 19,4 | 19,3 | 19,1 | 18,7 | 18,2 | 17,5 | 16,6 | 15,6 | 13,8 | 11,7 | 10,1 | 8,4 | 5,5 |
| BN4 | N4 100-250A/A | 11 | 15 | | 22,1 | 22,3 | 22,3 | 22,2 | 22,1 | 21,9 | 21,7 | 21,2 | 20,5 | 19,8 | 18,8 | 17,1 | 15 | 13,4 | 11,7 | 8,9 |
| BN4 | N4 100-315C/A | 11 | 15 | | 26,8 | 26,9 | 26,9 | 26,8 | 26,6 | 26,2 | 25,7 | 24,9 | 23,8 | 22,7 | 21,3 | 18,9 | 15,9 | 13,7 | 11,3 | - |
| BN4 | N4 100-315B/A | 15 | 20 | | 31,8 | 31,5 | 31,5 | 31,5 | 31,4 | 31,2 | 30,8 | 30,2 | 29,3 | 28,2 | 26,9 | 24,6 | 21,9 | 19,8 | 17,6 | 14 |
| BN4 | N4 100-315A/A | 18,5 | 25 | | 36,4 | 36,8 | 36,9 | 36,9 | 36,9 | 36,7 | 36,4 | 35,9 | 35,2 | 34,4 | 33,3 | 31,4 | 29,1 | 27,3 | 25,4 | 22,1 |
| BN4 | N4 100-400C/A | 22 | 30 | | 41,8 | 41,3 | 41,2 | 41,2 | 41 | 40,8 | 40,4 | 39,8 | 38,9 | 37,8 | 36,5 | 34,1 | 31,1 | 28,7 | 26 | - |
| BN4 | N4 100-400B/A | 30 | 40 | | 50 | 50,2 | 50,1 | 50,1 | 49,9 | 49,7 | 49,4 | 48,8 | 48 | 47,1 | 46 | 43,9 | 41,4 | 39,4 | 37,2 | 33,4 |
| BN4 | N4 100-400A/A | 37 | 50 | | 58 | 58,2 | 58,1 | 58,1 | 58 | 57,8 | 57,6 | 57 | 56,4 | 55,5 | 54,6 | 52,8 | 50,6 | 48,9 | 47,1 | 44 |

### Three-phase

| Model | | P2 | | Q = Flow | | | | | | | | | | | | | | | | |
|---|---|---|---|---|---|---|---|---|---|---|---|---|---|---|---|---|---|---|---|---|
| | | | | m³/h | 0 | 84 | 96 | 108 | 120 | 132 | 150 | 168 | 180 | 192 | 210 | 240 | 270 | 300 | 330 | |
| | | | | l/min | | 1400 | 1600 | 1800 | 2000 | 2200 | 2500 | 2800 | 3000 | 3200 | 3500 | 4000 | 4500 | 5000 | 5500 | |
| | | kW | HP | H (m) = Total head | | | | | | | | | | | | | | | | |
| BN4 | N4 125-250E/A | 5,5 | 7,5 | | 11 | 11 | 10,8 | 10,5 | 10,1 | 9,7 | 9,1 | 8,3 | 7,8 | 7,2 | 6,2 | 4,4 | - | - | - | |
| BN4 | N4 125-250D/A | 7,5 | 10 | | 14 | 14 | 13,9 | 13,7 | 13,4 | 13 | 12,4 | 11,6 | 11 | 10,4 | 9,4 | 7,4 | 5,1 | - | - | |
| BN4 | N4 125-250C/A | 11 | 15 | | 16,8 | 16,7 | 16,6 | 16,4 | 16,2 | 15,9 | 15,4 | 14,6 | 14,1 | 13,5 | 12,5 | 10,4 | 8,2 | 5,8 | - | |
| BN4 | N4 125-250B/A | 11 | 15 | | 19,1 | 19,3 | 19,2 | 19,1 | 18,9 | 18,7 | 18,2 | 17,5 | 16,9 | 16,3 | 15,3 | 13,3 | 10,9 | 8,2 | - | |
| BN4 | N4 125-250A/A | 15 | 20 | | 22,8 | 22,7 | 22,7 | 22,6 | 22,4 | 22,2 | 21,8 | 21,2 | 20,8 | 20,1 | 19,3 | 17,4 | 15 | 12,4 | 9,3 | |
| BN4 | N4 125-315C/A | 18,5 | 25 | | 28 | 27,9 | 27,9 | 27,7 | 27,5 | 27,2 | 26,5 | 25,6 | 24,9 | 24,1 | 22,8 | 20,1 | 17 | 13,5 | 9,5 | |
| BN4 | N4 125-315B/A | 22 | 30 | | 31,8 | 31,8 | 31,7 | 31,6 | 31,5 | 31,1 | 30,6 | 29,7 | 29,1 | 28,5 | 27,3 | 24,9 | 22 | 18,5 | 14,3 | |
| BN4 | N4 125-315A/A | 30 | 40 | | 36,2 | 36,8 | 36,8 | 36,7 | 36,6 | 36,4 | 35,9 | 35,2 | 34,7 | 34,2 | 33,2 | 31 | 28,4 | 25,3 | 21,6 | |
| BN4 | N4 125-400C/A | 37 | 50 | | 45,1 | 45,3 | 45,5 | 45,5 | 45,3 | 45,1 | 44,4 | 43,5 | 42,7 | 41,8 | 40,2 | 37 | 33,1 | 28,6 | 23,4 | |
| BN4 | N4 125-400B/A | 45 | 60 | | 51,8 | 51,4 | 51,4 | 51,4 | 51,2 | 51 | 50,4 | 49,6 | 48,9 | 48,1 | 46,8 | 44 | 40,5 | 36,3 | 31,4 | |
| BN4 | N4 125-400A/A | 55 | 75 | | 59 | 59,2 | 59,1 | 59,1 | 58,9 | 58,7 | 58,3 | 57,7 | 57,2 | 56,6 | 55,6 | 53,4 | 50,5 | 46,8 | 42,3 | |

### Three-phase

| Model | | P2 | | Q = Flow | | | | | | | | | | | | | | | | | | | |
|---|---|---|---|---|---|---|---|---|---|---|---|---|---|---|---|---|---|---|---|---|---|---|---|
| | | | | m³/h | 0 | 132 | 150 | 168 | 180 | 192 | 210 | 240 | 270 | 300 | 330 | 360 | 390 | 420 | 450 | 480 | 540 | 600 | 660 |
| | | | | l/min | | 2200 | 2500 | 2800 | 3000 | 3200 | 3500 | 4000 | 4500 | 5000 | 5500 | 6000 | 6500 | 7000 | 7500 | 8000 | 9000 | 10000 | 11000 |
| | | kW | HP | H (m) = Total head | | | | | | | | | | | | | | | | | | | |
| BN4 | N4 150-315D/B | 18,5 | 25 | | 22,9 | 23,1 | 22,8 | 22,5 | 22,2 | 21,9 | 21,3 | 20,3 | 19,1 | 17,8 | 16,4 | 15 | 13,5 | 11,9 | 10,2 | - | - | - | - |
| BN4 | N4 150-315C/B | 22 | 30 | | 26,9 | 26,7 | 26,4 | 26,1 | 25,8 | 25,4 | 24,9 | 23,8 | 22,5 | 21 | 19,5 | 17,9 | 16,2 | 14,5 | 12,7 | 10,8 | - | - | - |
| BN4 | N4 150-315B/B | 30 | 40 | | 24 | 25,3 | 25,2 | 25,1 | 25 | 24,9 | 24,7 | 24,3 | 23,8 | 23,2 | 22,5 | 21,6 | 20,7 | 19,8 | 18,7 | 17,6 | 15,1 | - | - |
| BN4 | N4 150-315A/B | 37 | 50 | | 28 | 29,5 | 29,5 | 29,5 | 29,5 | 29,4 | 29,3 | 29 | 28,6 | 28,1 | 27,4 | 26,7 | 25,9 | 24,9 | 23,8 | 22,6 | 19,9 | 16,7 | - |
| BN4 | N4 150-315S | 45 | 60 | | 33,8 | 34,9 | 34,9 | 34,9 | 34,9 | 34,8 | 34,7 | 34,5 | 34,1 | 33,6 | 33 | 32,2 | 31,4 | 30,4 | 29,4 | 28,2 | 25,5 | 22,3 | 18,7 |
| BN4 | N4 150-400B/B | 55 | 75 | | 39 | 42,2 | 42,3 | 42,3 | 42,2 | 42,2 | 42 | 41,6 | 41 | 40,3 | 39,5 | 38,6 | 37,5 | 36,4 | 35 | 33,5 | 29,8 | 25,4 | - |
| BN4 | N4 150-400A/B | 75 | 100 | | 50 | 52,5 | 52,6 | 52,6 | 52,6 | 52,5 | 52,4 | 52,2 | 51,8 | 51,3 | 50,6 | 49,6 | 48,5 | 47,2 | 45,8 | 44,2 | 40,6 | 36,7 | 32,2 |
| BN4 | N4 150-400S | 90 | 120 | | 58,1 | 60,8 | 60,9 | 61 | 61 | 61 | 61 | 60,7 | 60,3 | 59,6 | 58,8 | 57,7 | 56,4 | 54,9 | 53,2 | 51,4 | 47,3 | 42,7 | 37,6 |

### Three-phase

| Model | | P2 | | Q = Flow | | | | | | | | | | | | | | | | | | | |
|---|---|---|---|---|---|---|---|---|---|---|---|---|---|---|---|---|---|---|---|---|---|---|---|
| | | | | m³/h | 0 | 180 | 192 | 210 | 240 | 270 | 300 | 330 | 360 | 390 | 420 | 450 | 480 | 540 | 600 | 660 | 720 | 810 | 900 |
| | | | | l/min | | 3000 | 3200 | 3500 | 4000 | 4500 | 5000 | 5500 | 6000 | 6500 | 7000 | 7500 | 8000 | 9000 | 10000 | 11000 | 12000 | 13500 | 15000 |
| | | kW | HP | H (m) = Total head | | | | | | | | | | | | | | | | | | | |
| N4 200-315C | | 45 | 60 | | 27,7 | 28,6 | 28,6 | 28,6 | 28,5 | 28,4 | 28,2 | 28 | 27,7 | 27,3 | 26,9 | 26,4 | 25,9 | 24,6 | 23,1 | 21,3 | 19,3 | 15,7 | - |
| N4 200-315B | | 55 | 75 | | 32,5 | 33,3 | 33,3 | 33,2 | 33,1 | 32,9 | 32,7 | 32,5 | 32,2 | 31,8 | 31,5 | 31 | 30,5 | 29,4 | 28 | 26,3 | 24,3 | 20,5 | - |
| N4 200-315A | | 75 | 100 | | 37,4 | 37,9 | 37,9 | 37,9 | 37,8 | 37,7 | 37,5 | 37,2 | 36,9 | 36,5 | 36,1 | 35,6 | 35,1 | 33,8 | 32,3 | 30,6 | 28,5 | 24,7 | 20,3 |
| N4 200-400C | | 90 | 120 | | 45,8 | 47,8 | 47,8 | 47,8 | 47,6 | 47,5 | 47,2 | 46,8 | 46,4 | 46 | 45,5 | 44,9 | 44,3 | 42,8 | 41,1 | 39,1 | 36,7 | 32,3 | 27 |
| N4 200-400B | | 110 | 150 | | 51,9 | 53,7 | 53,7 | 53,7 | 53,7 | 53,5 | 53,3 | 53 | 52,7 | 52,3 | 51,8 | 51,3 | 50,7 | 49,2 | 47,4 | 45,4 | 43,1 | 39,1 | 34,3 |
| N4 200-400A | | 132 | 180 | | 57 | 58,9 | 58,9 | 58,9 | 58,9 | 58,7 | 58,6 | 58,4 | 58,1 | 57,8 | 57,3 | 56,8 | 56,2 | 54,6 | 52,6 | 50,4 | 47,9 | 43,7 | 38,8 |

**P2:** Rated motor power output.
**H:** Total head in m
Tolerances according to UNI EN ISO 9906:2012
* Maximum suction lift 1-2 m.

N

## Characteristic curves n ≈ 2900 rpm

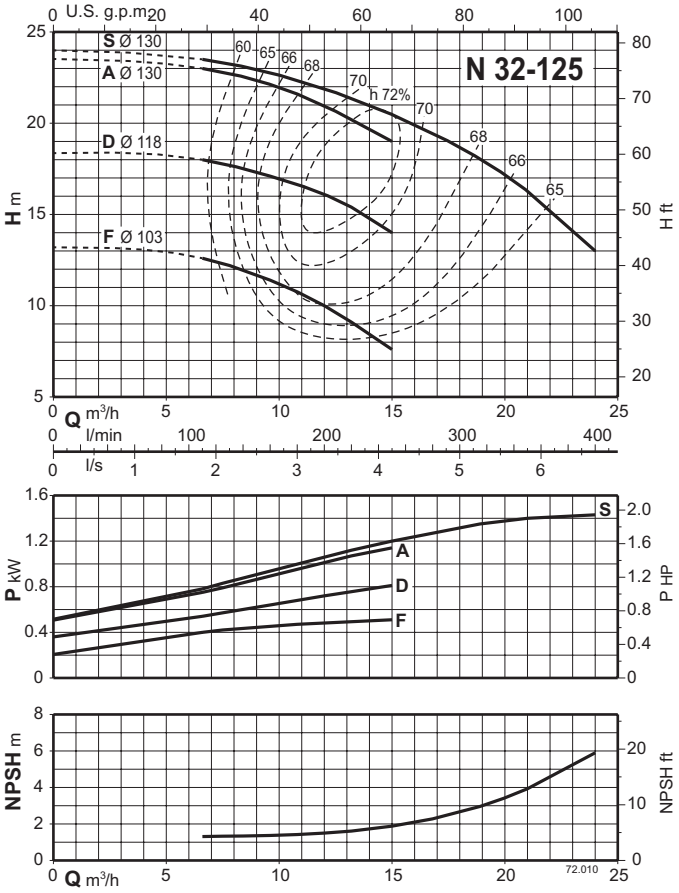


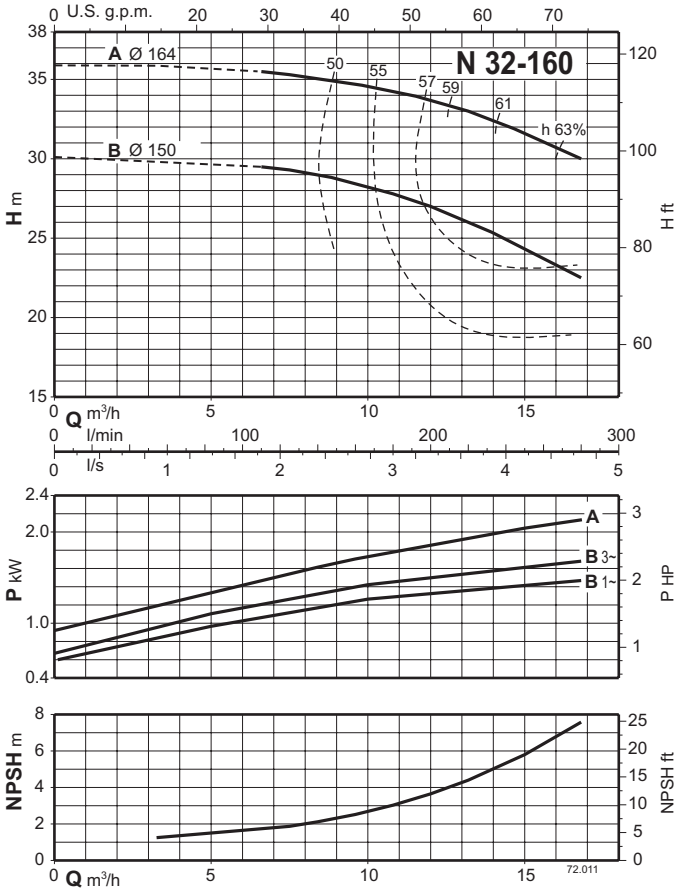


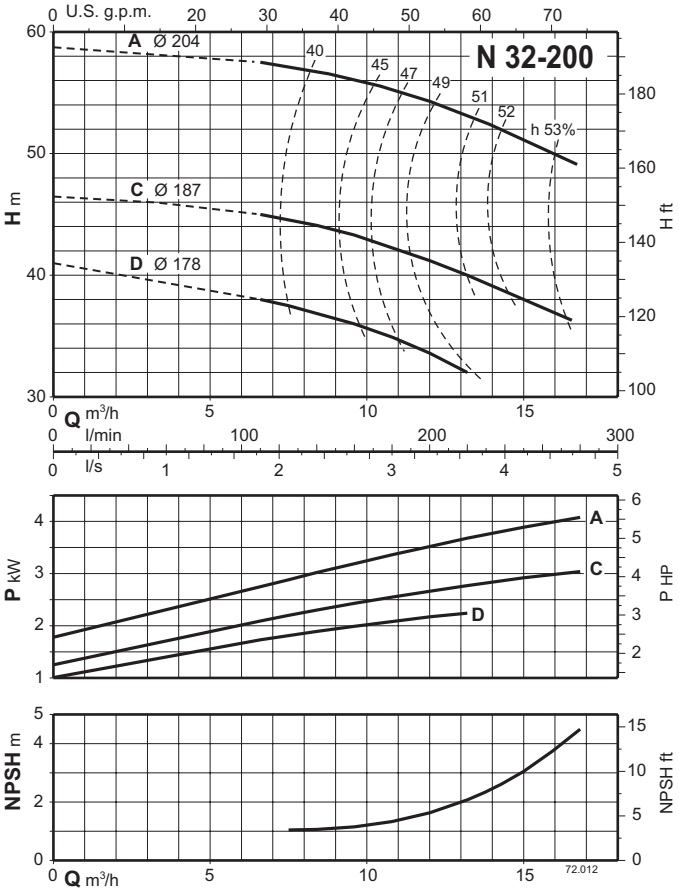


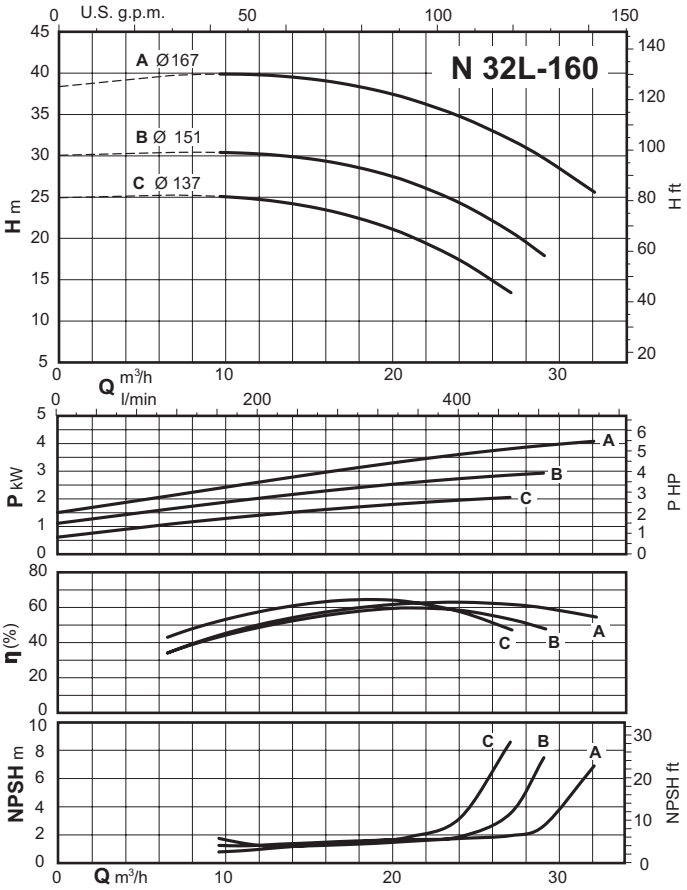

N

## Characteristic curves n ≈ 2900 rpm

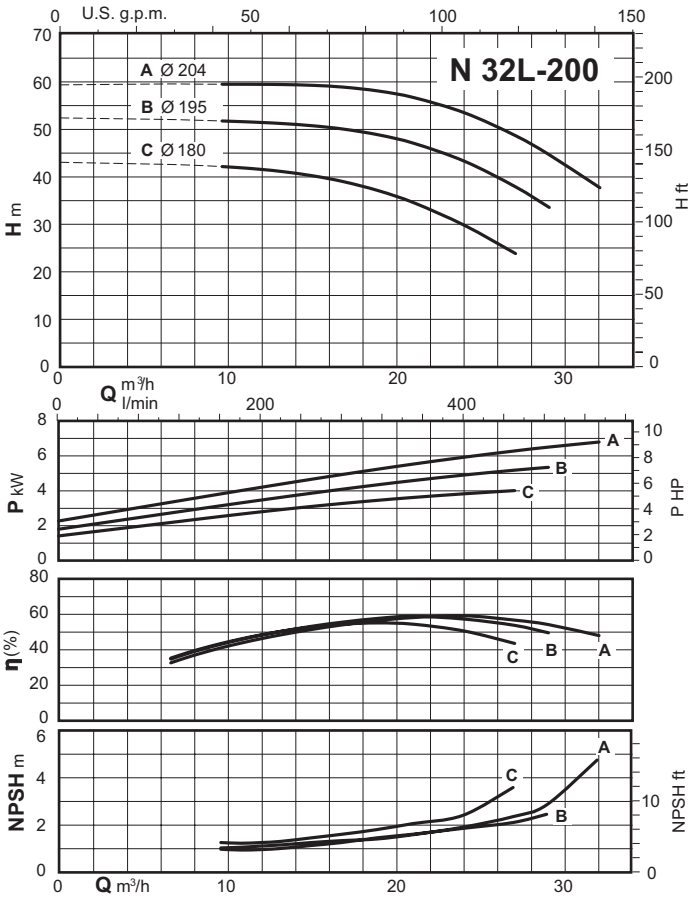


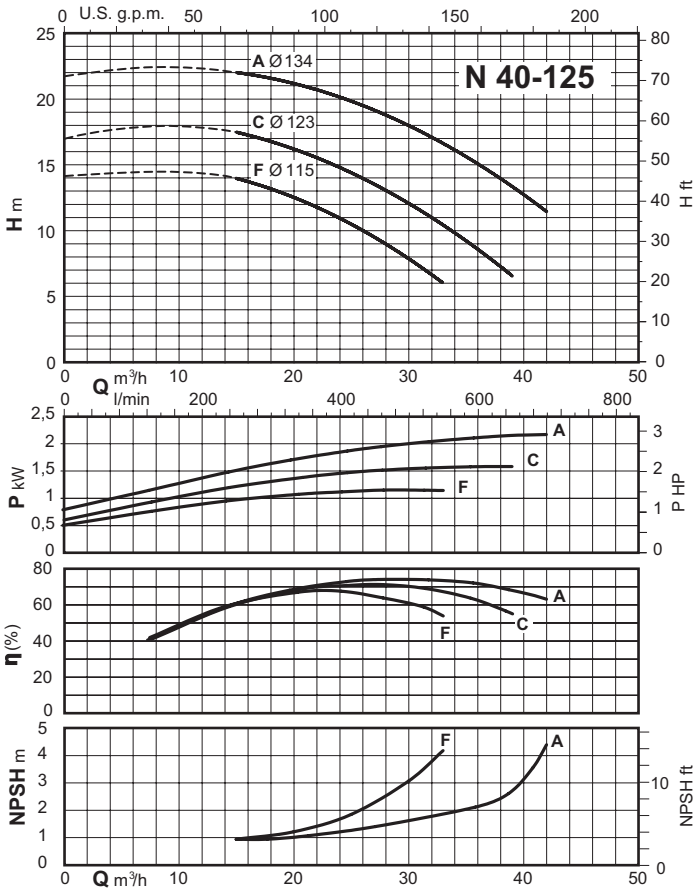


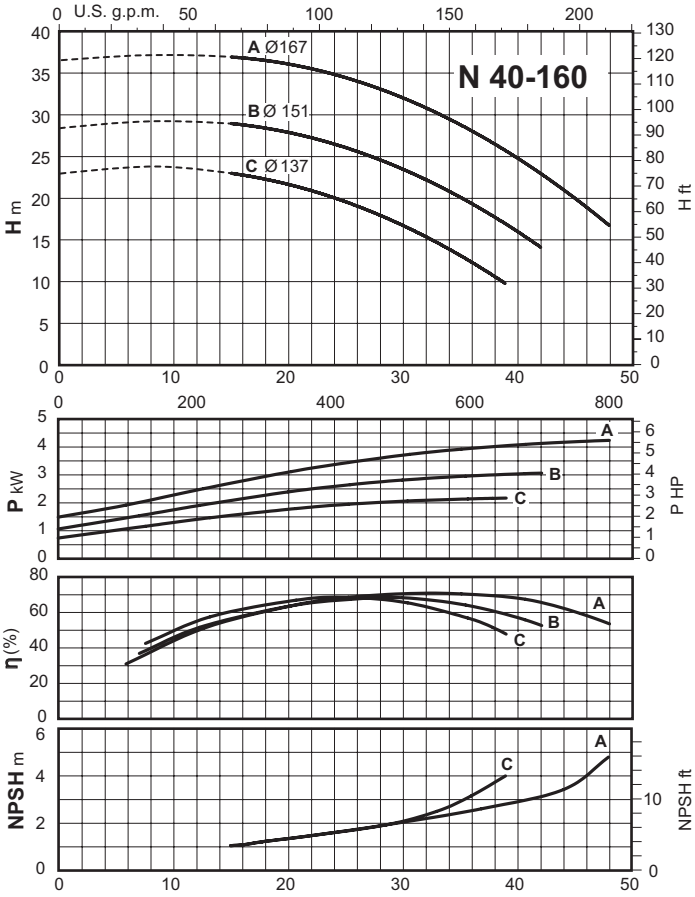


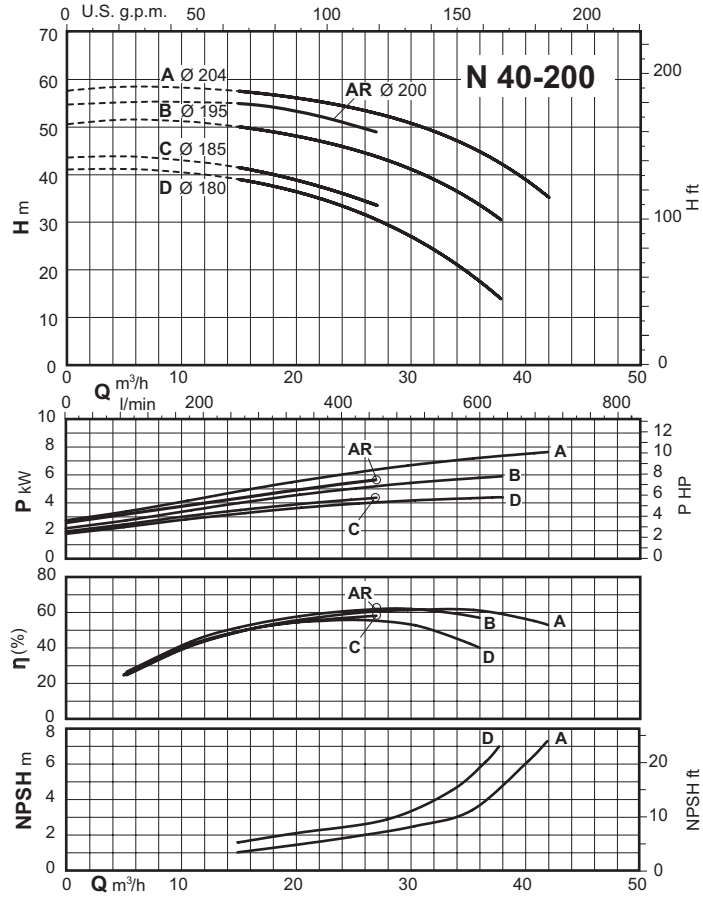

N

## Characteristic curves n ≈ 2900 rpm

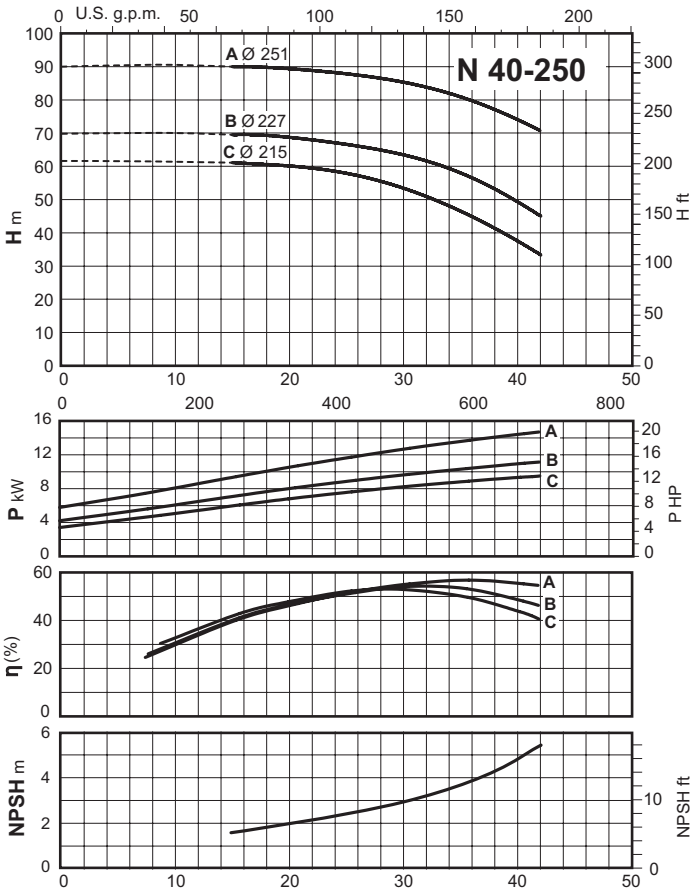


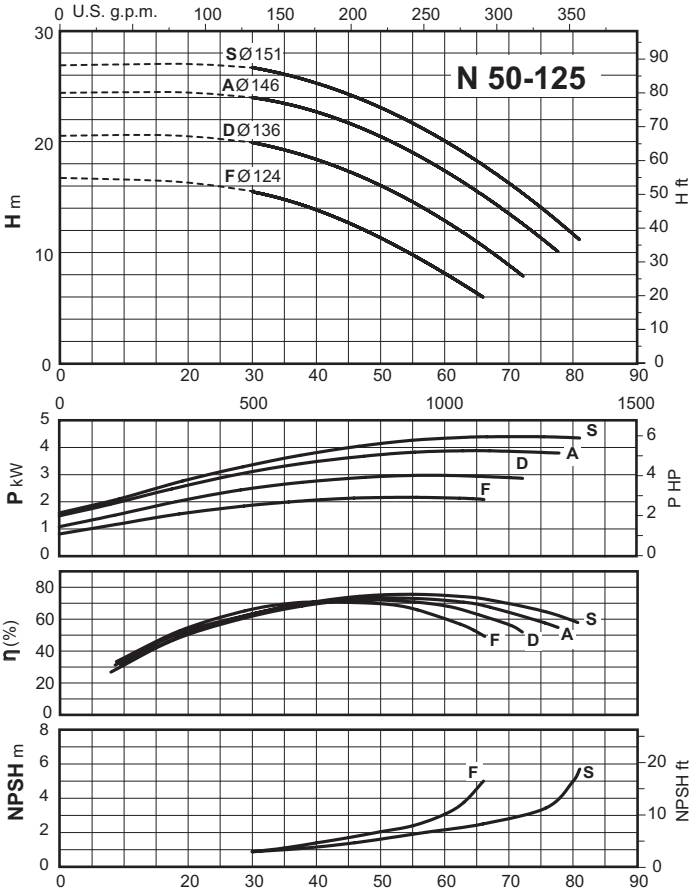


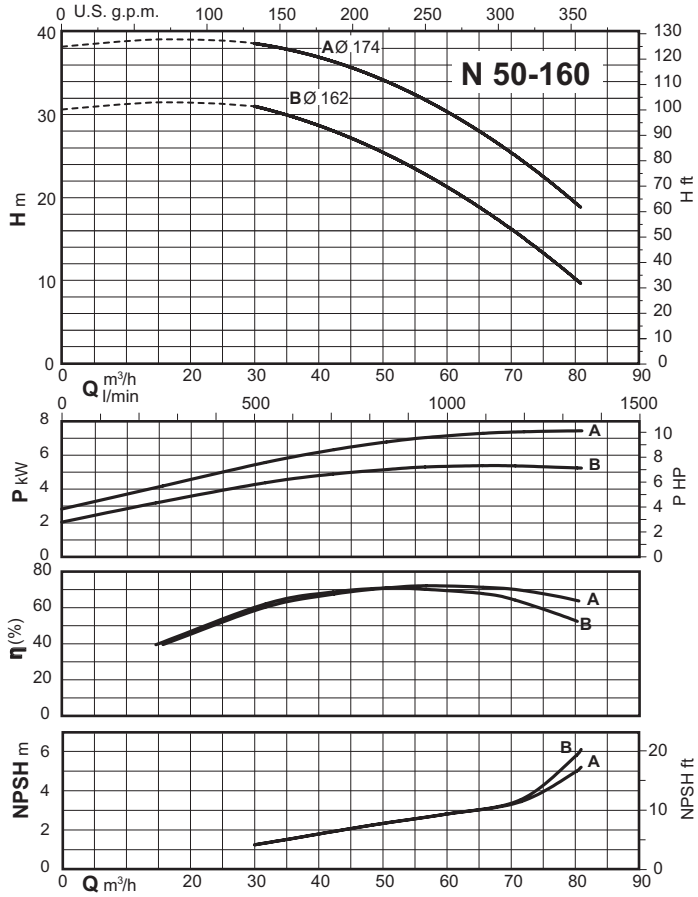


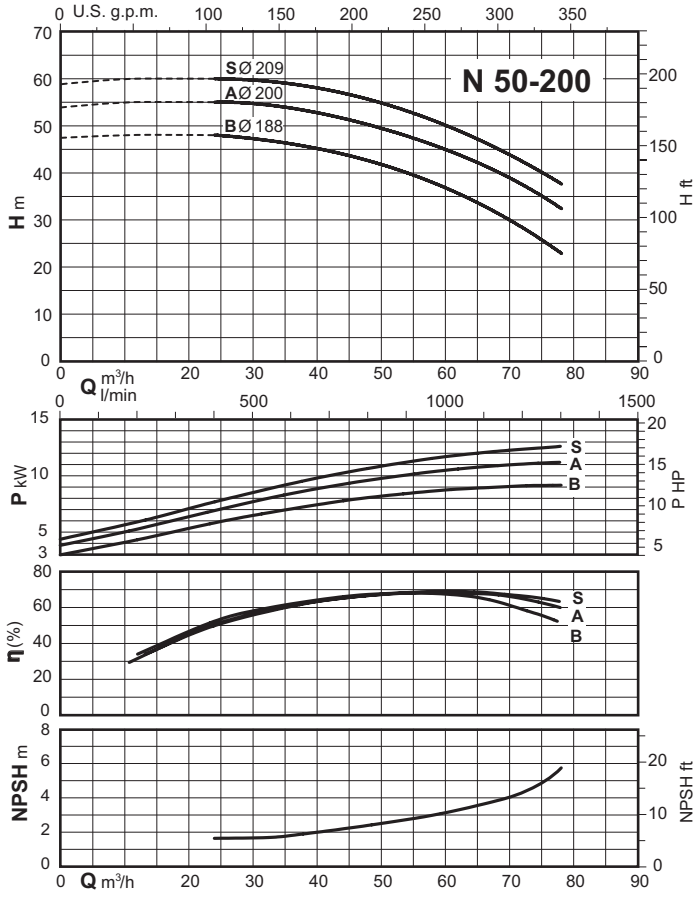

# N

## Characteristic curves n ≈ 2900 rpm

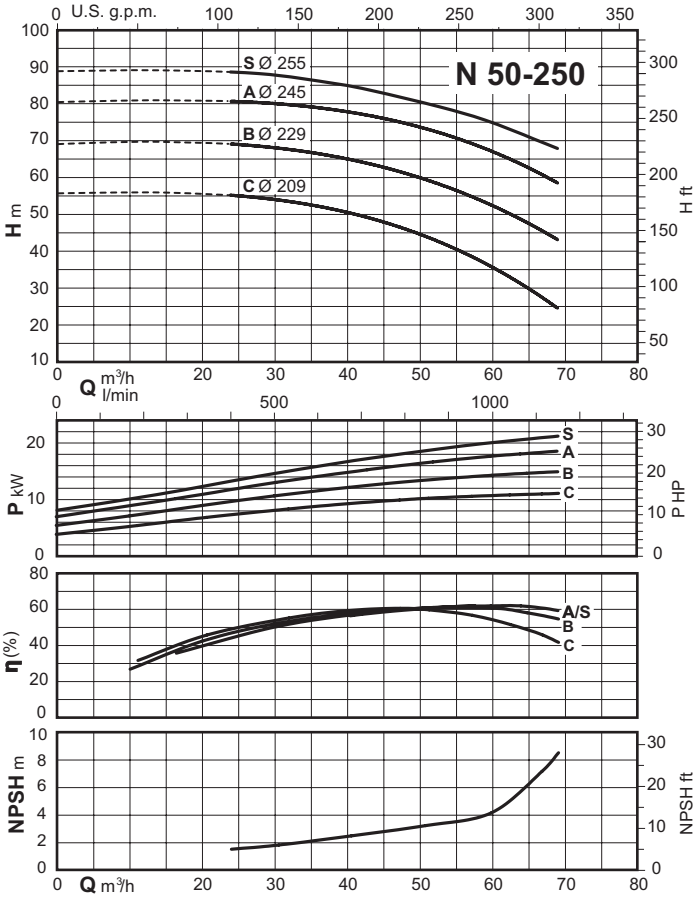


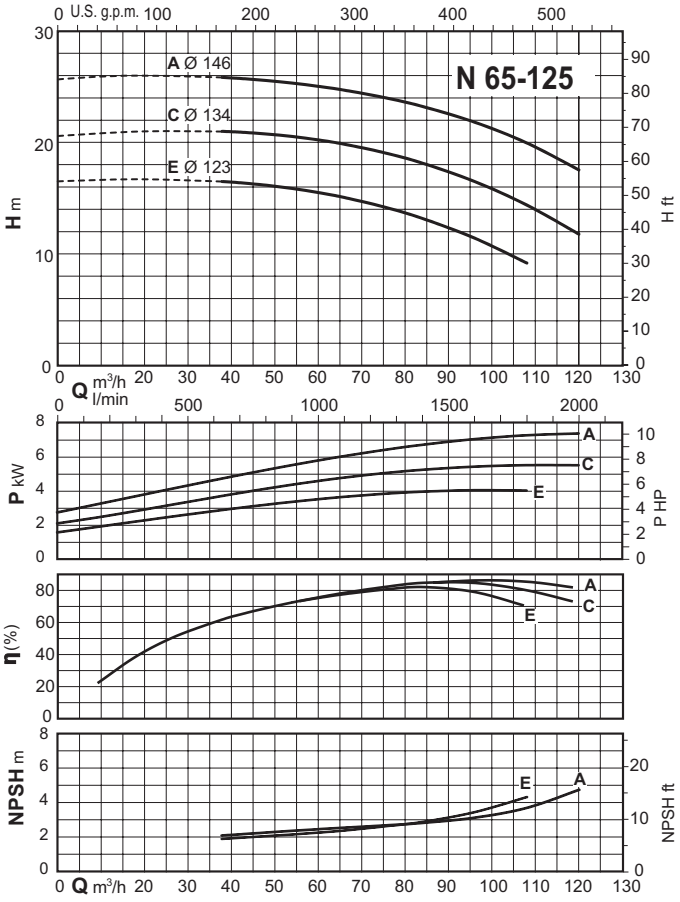


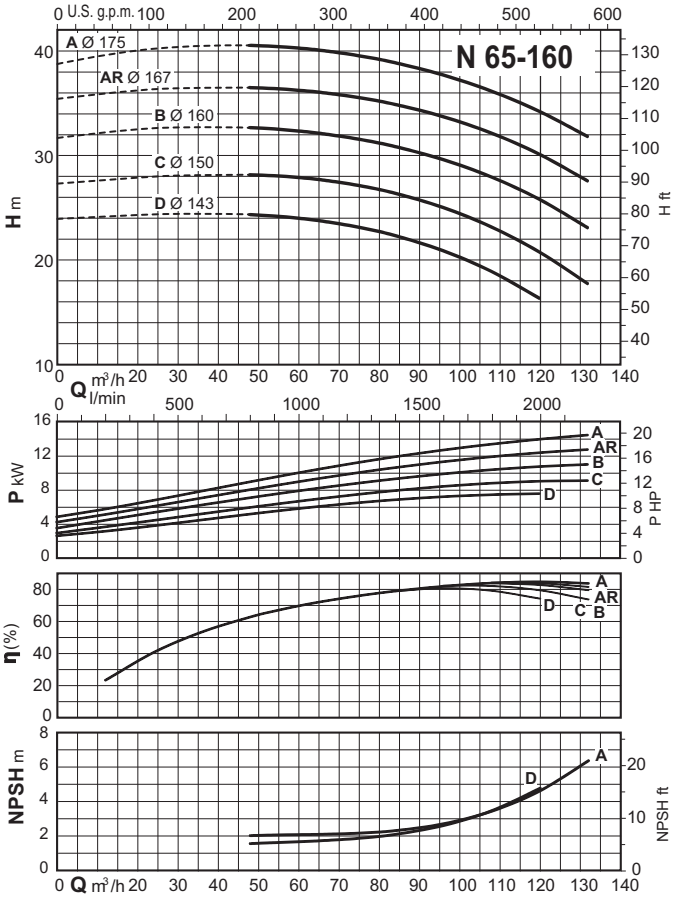


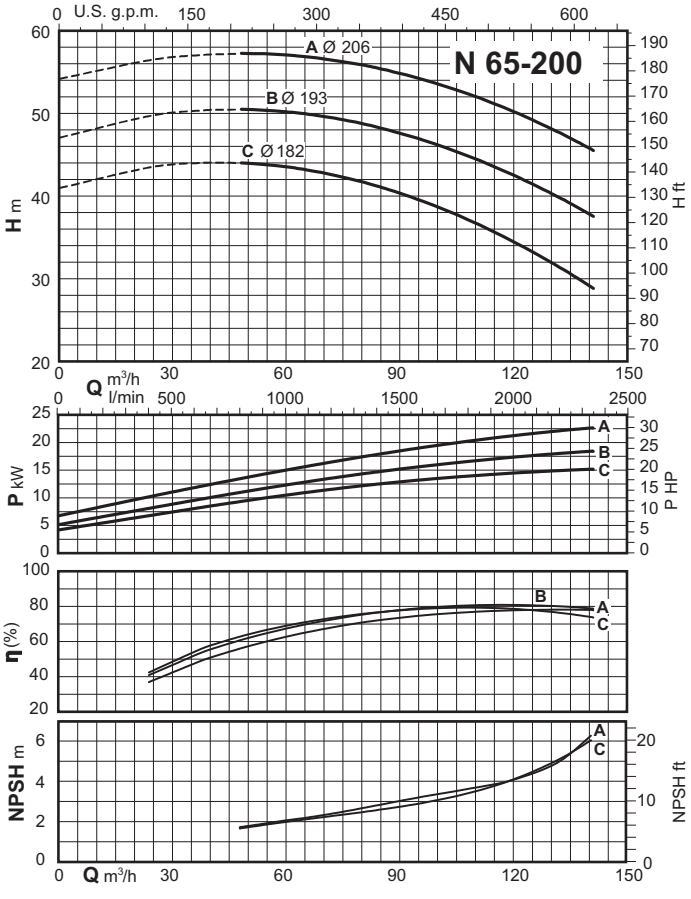

N

## Characteristic curves n ≈ 2900 rpm

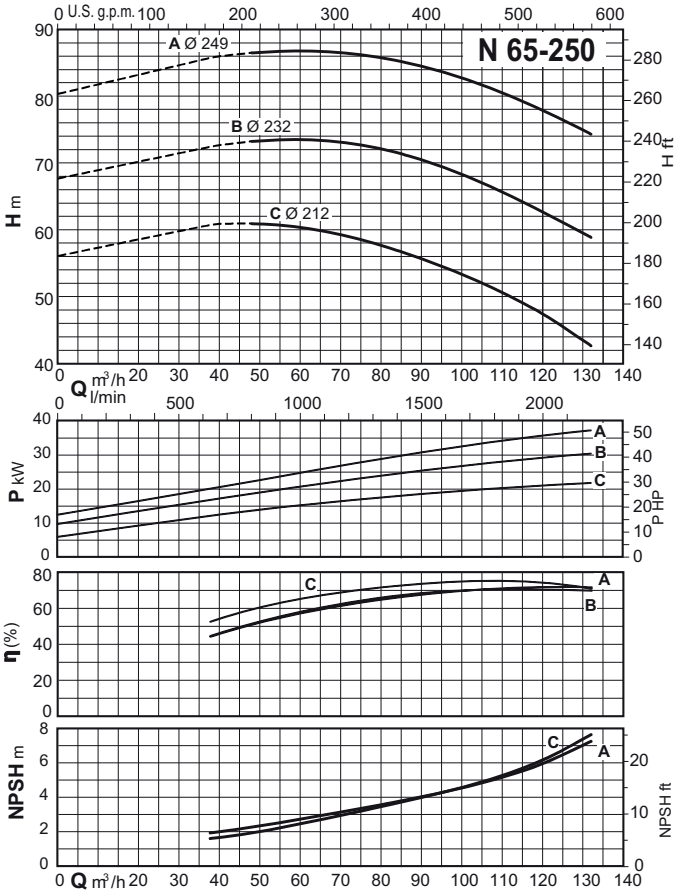


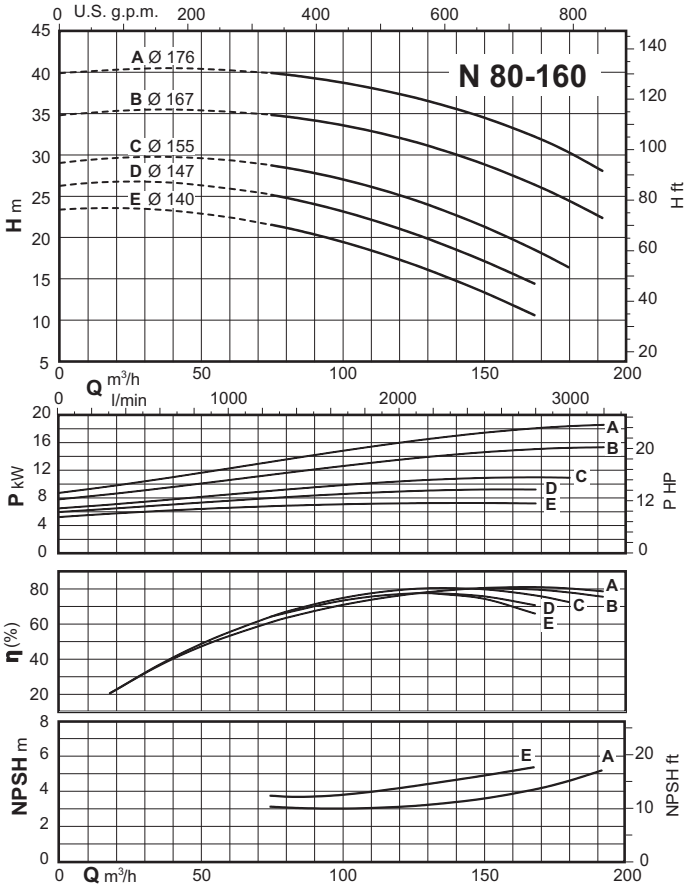


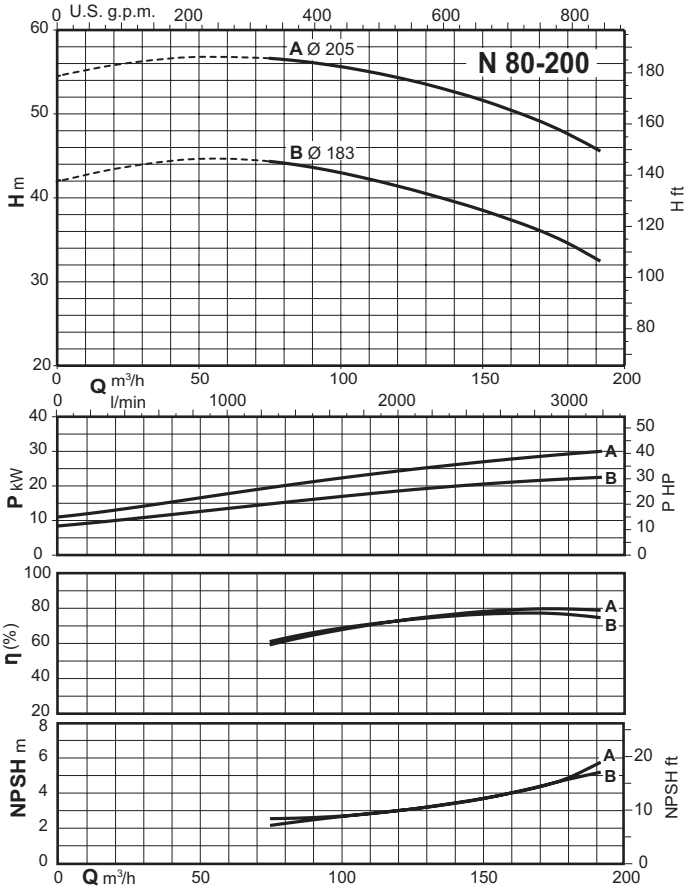


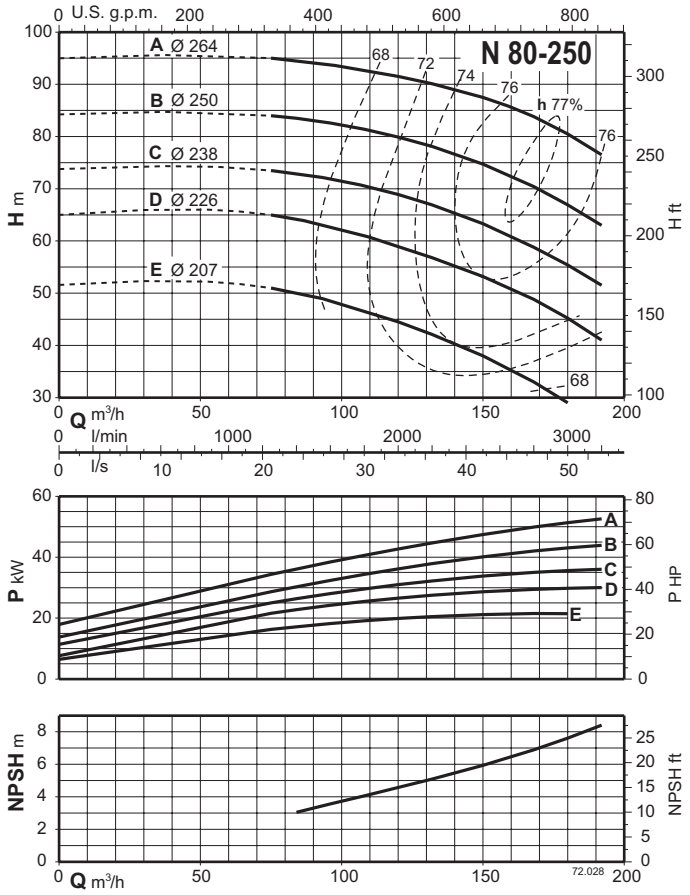

N

## Characteristic curves n ≈ 2900 rpm

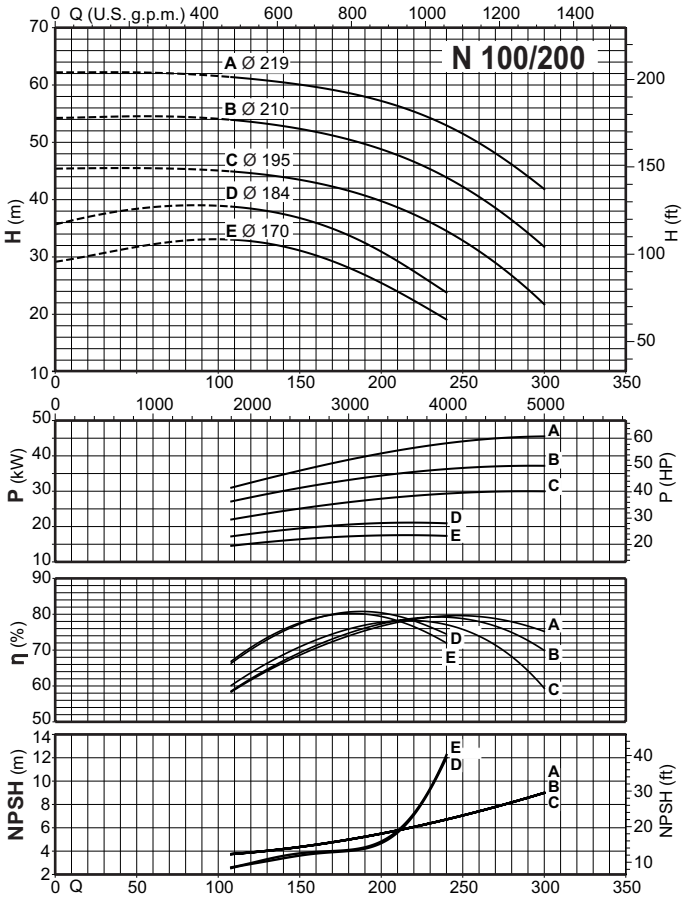


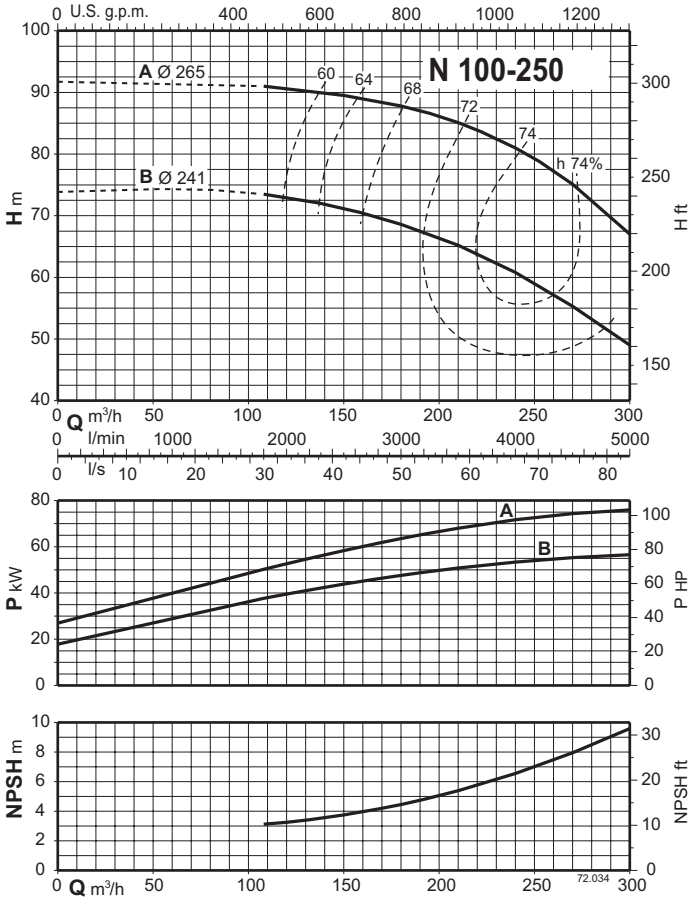

N

## Characteristic curves n ≈ 1450 rpm

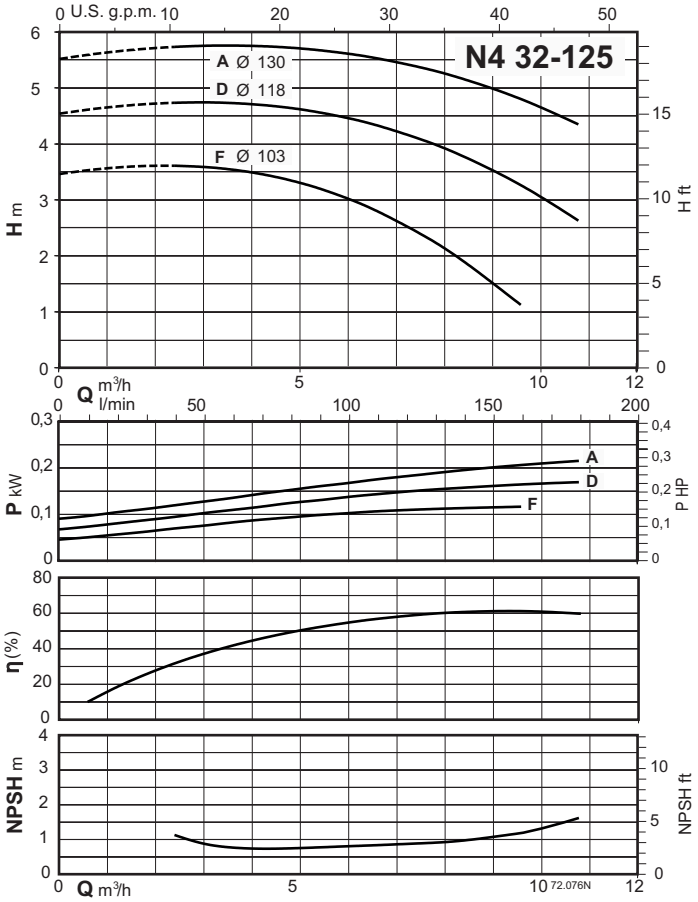


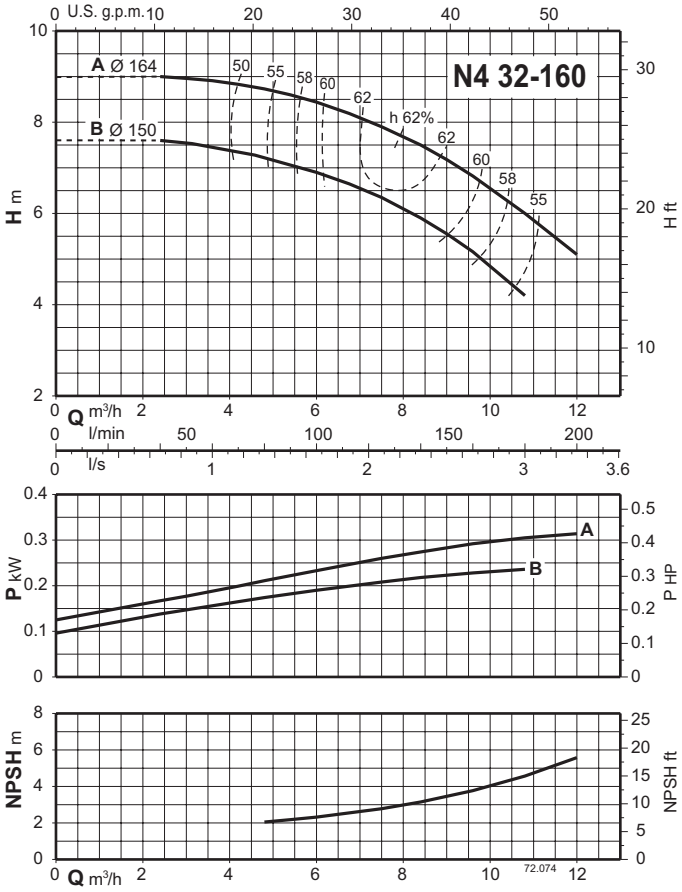


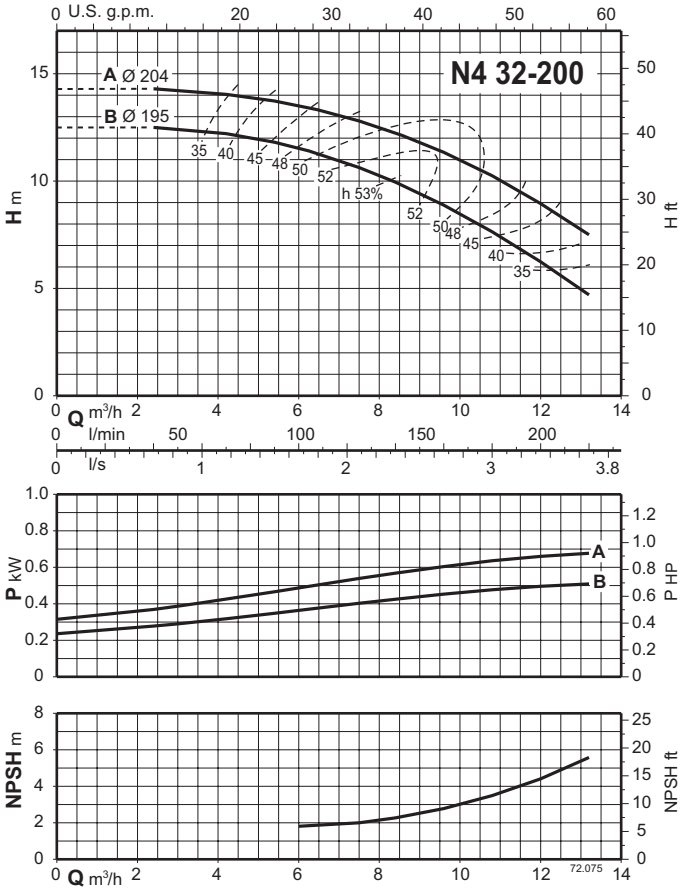

N

## Characteristic curves n ≈ 1450 rpm

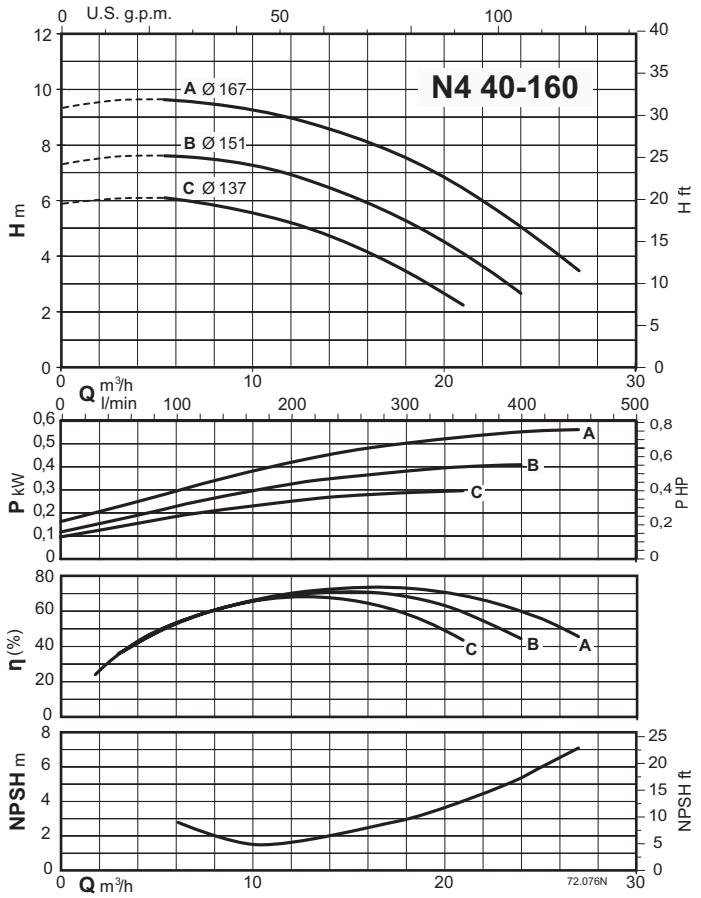


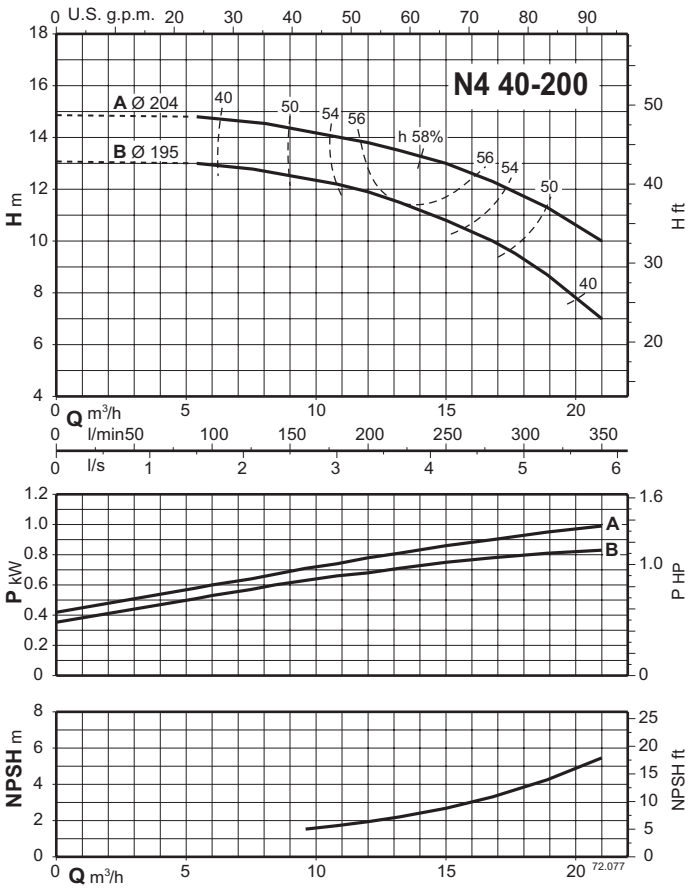


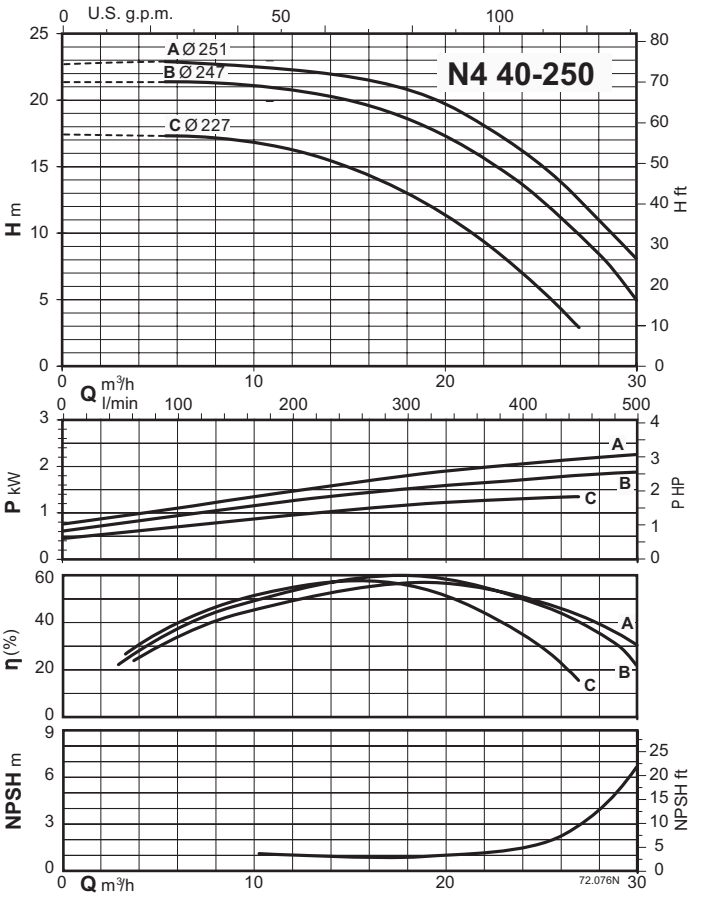


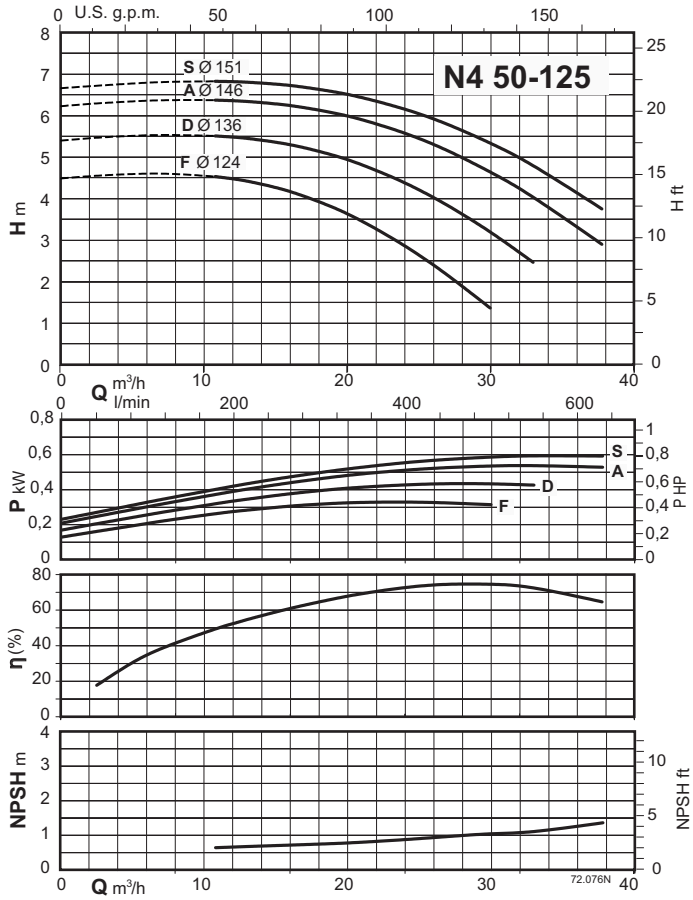

N

## Characteristic curves n ≈ 1450 rpm

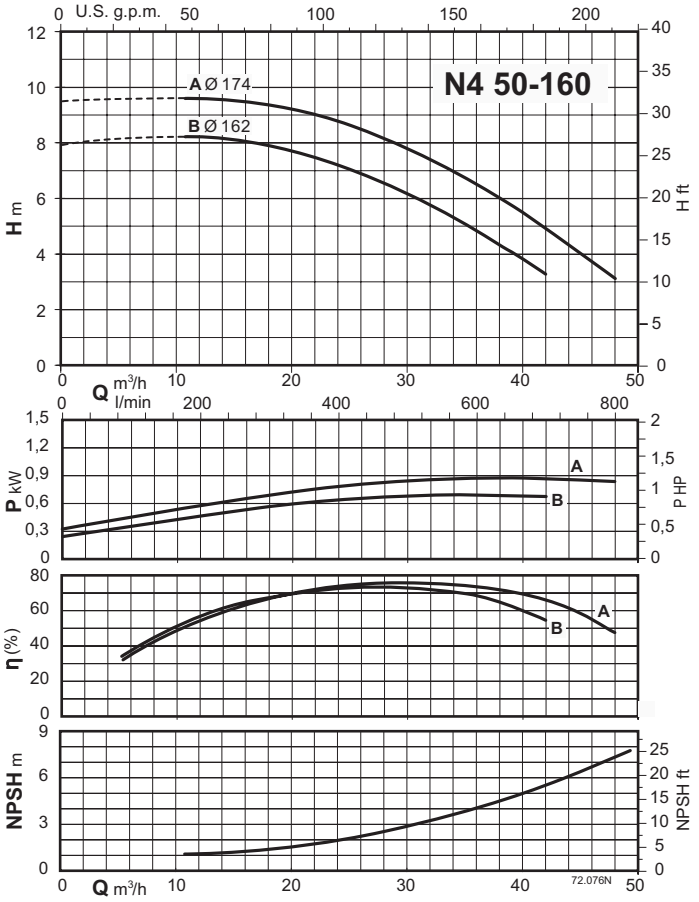


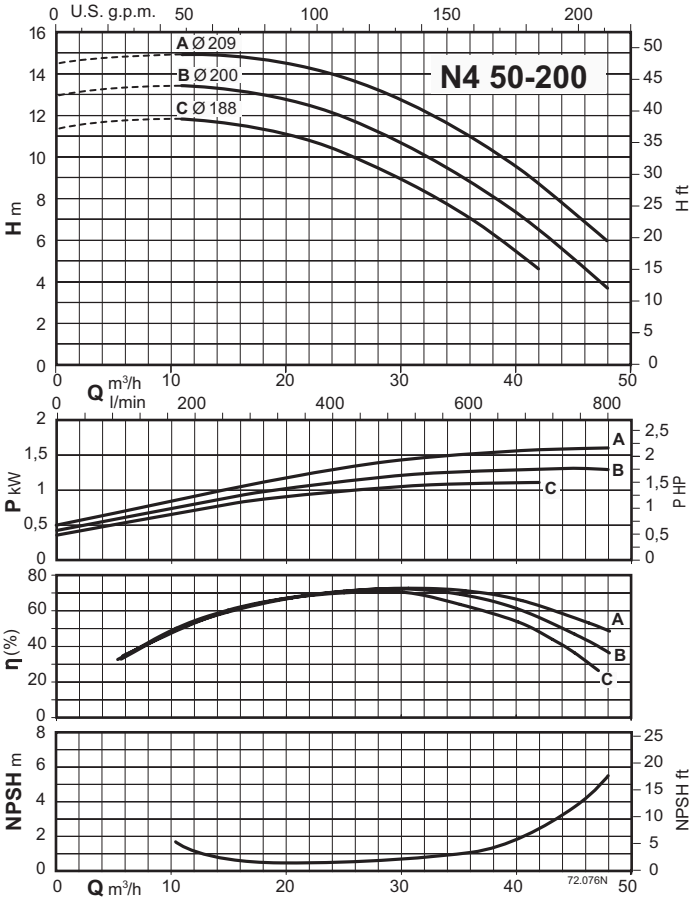


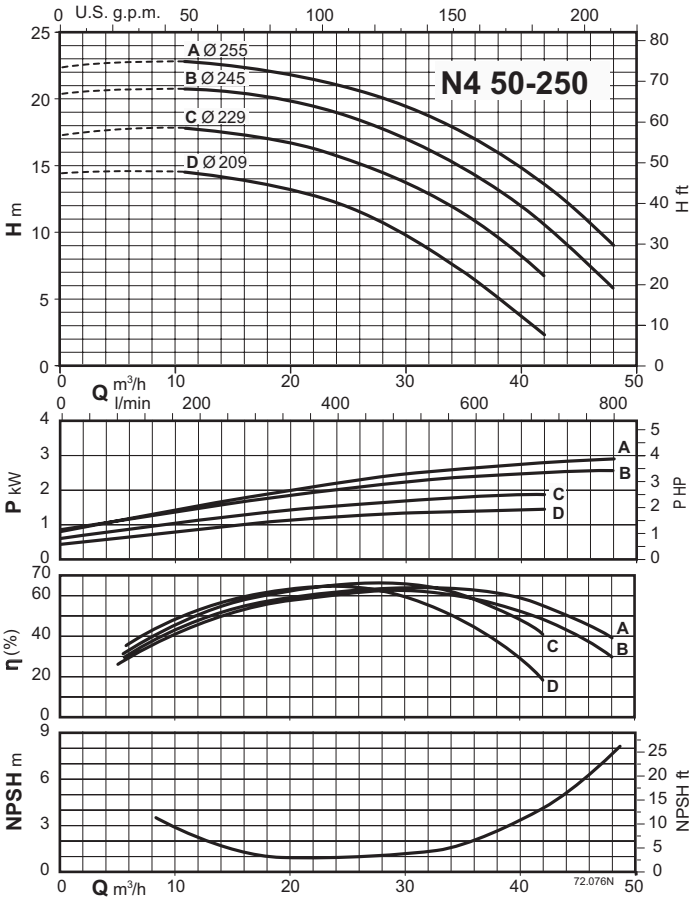


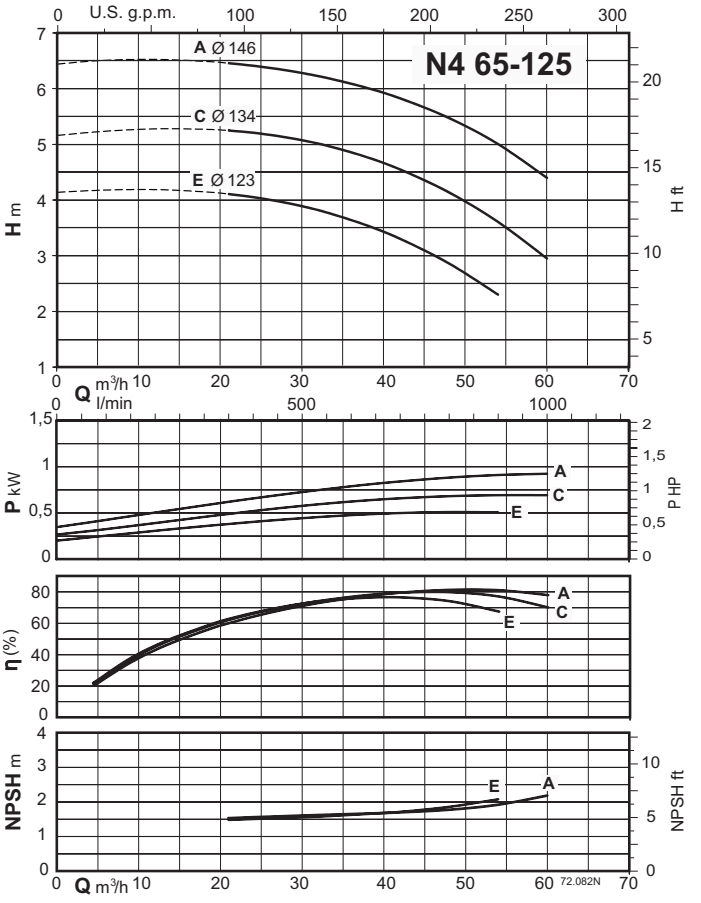

N

## Characteristic curves n ≈ 1450 rpm

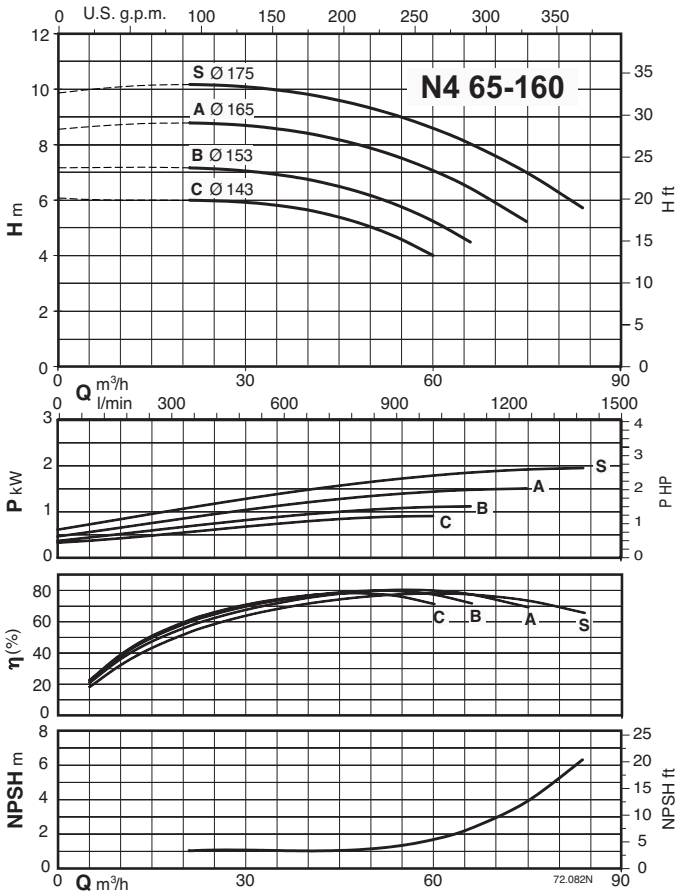


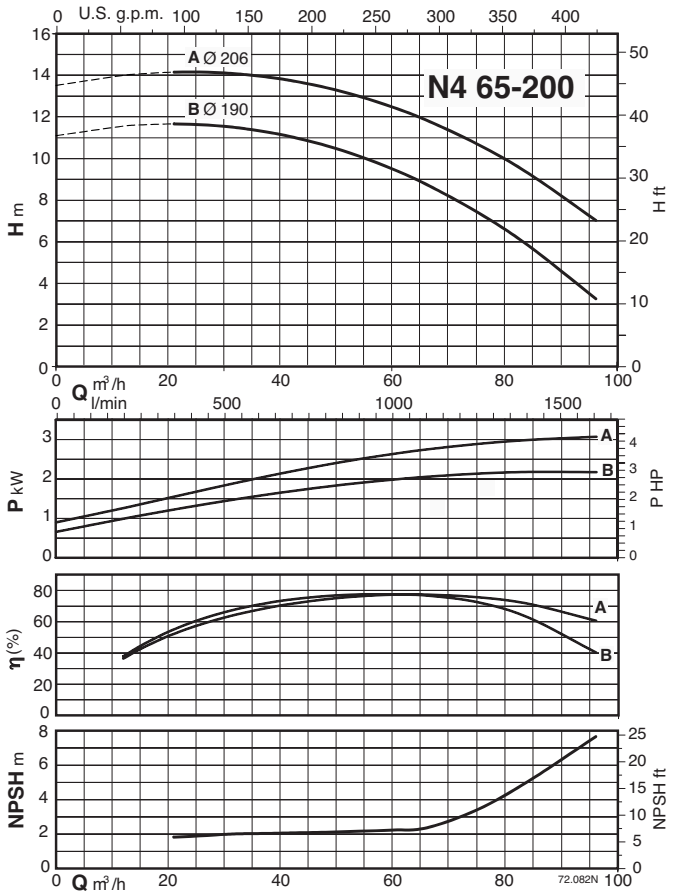


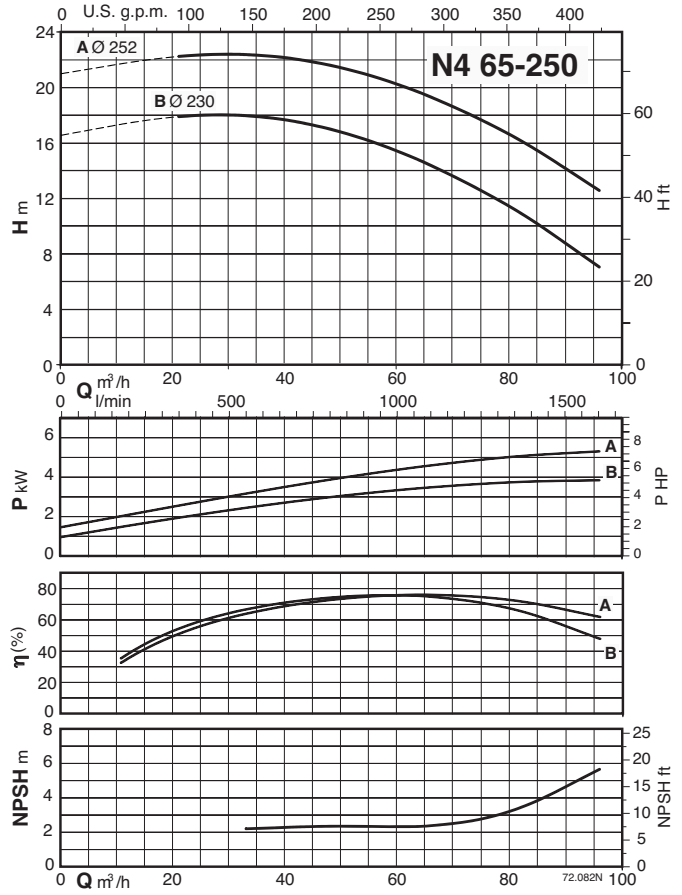


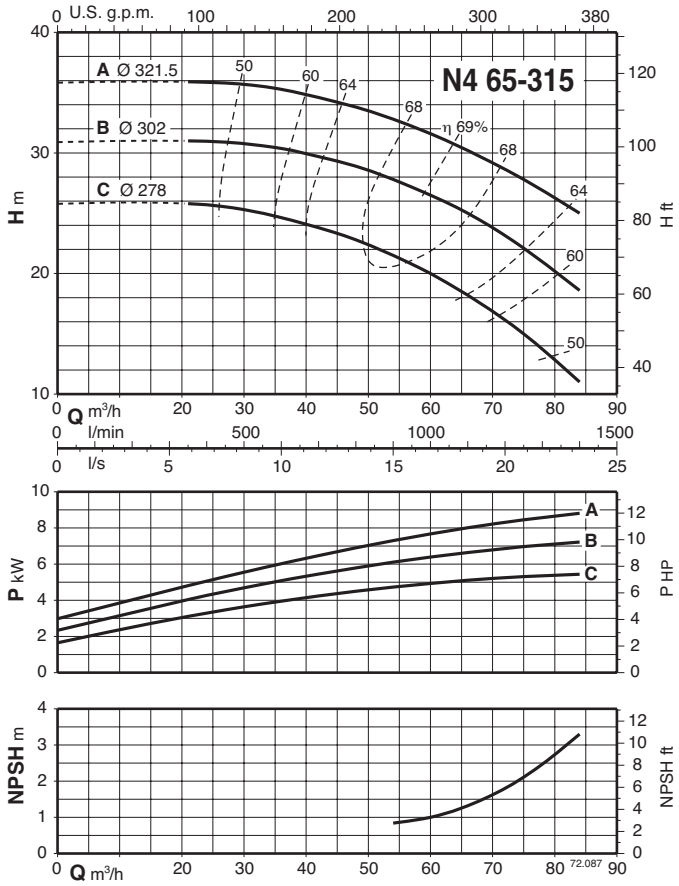

N

## Characteristic curves n ≈ 1450 rpm

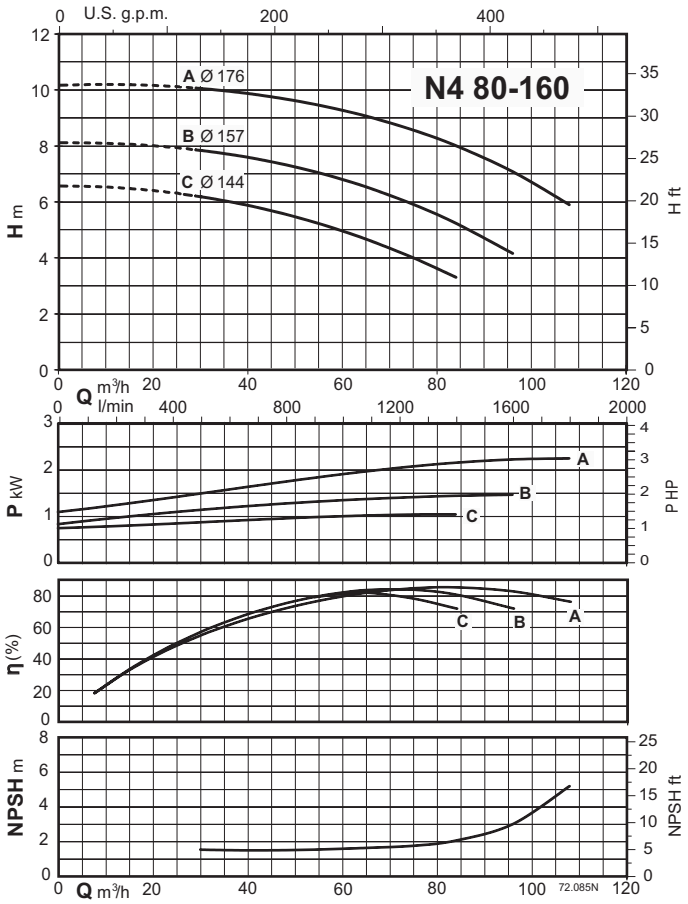


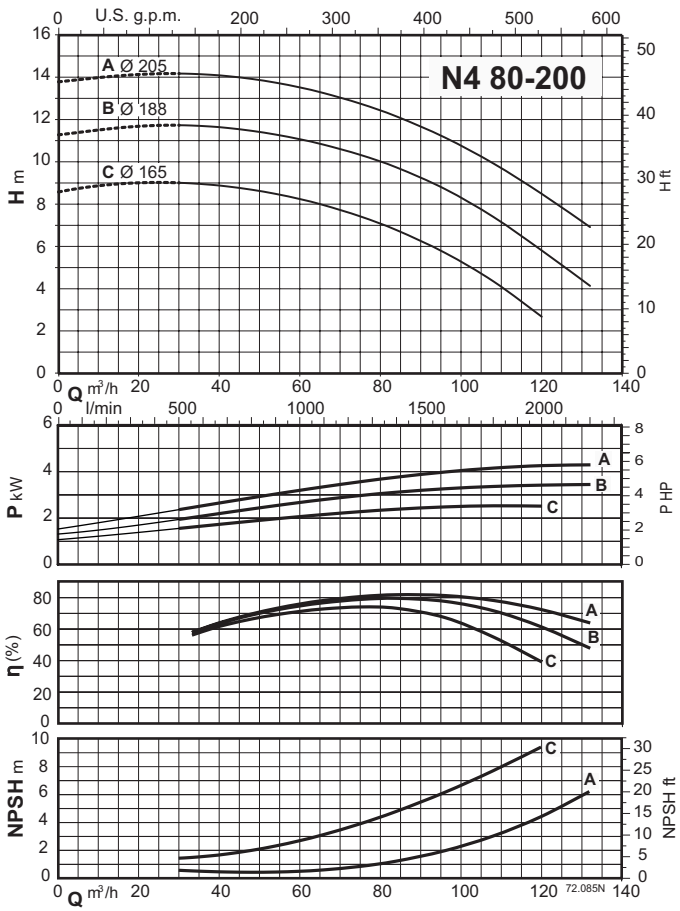


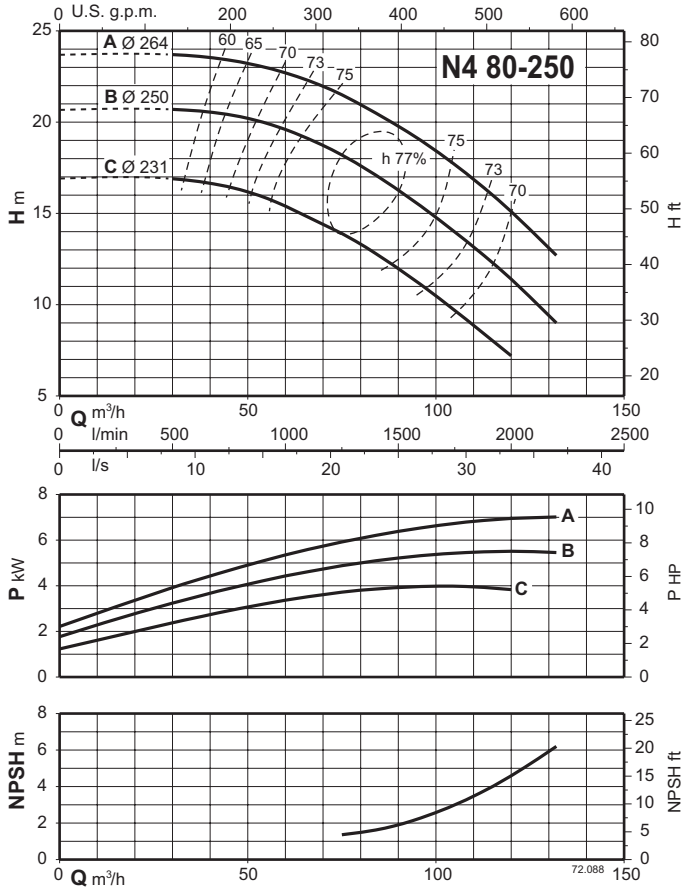

N

## Characteristic curves n ≈ 1450 rpm

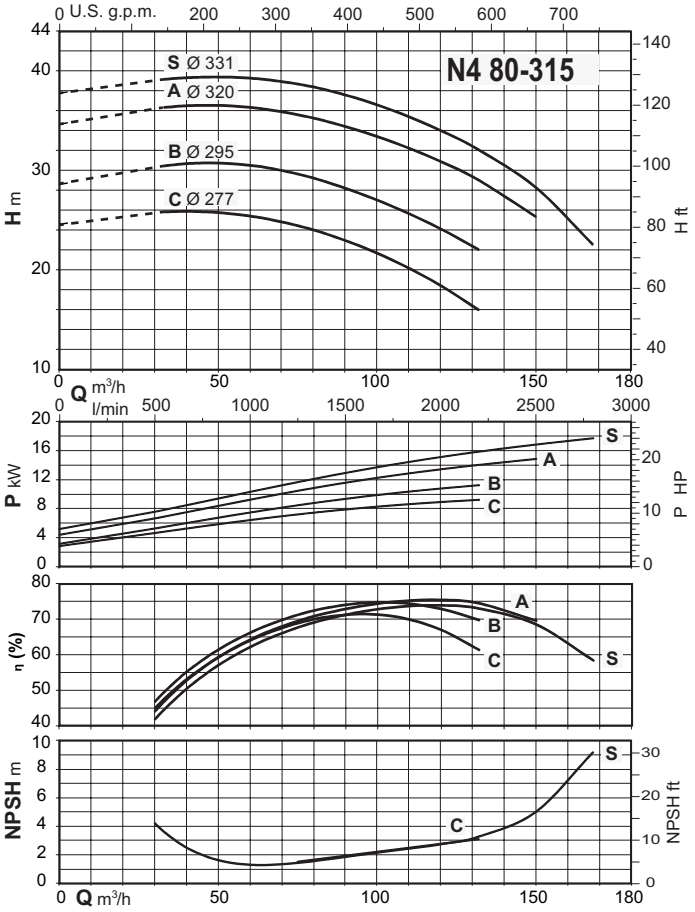


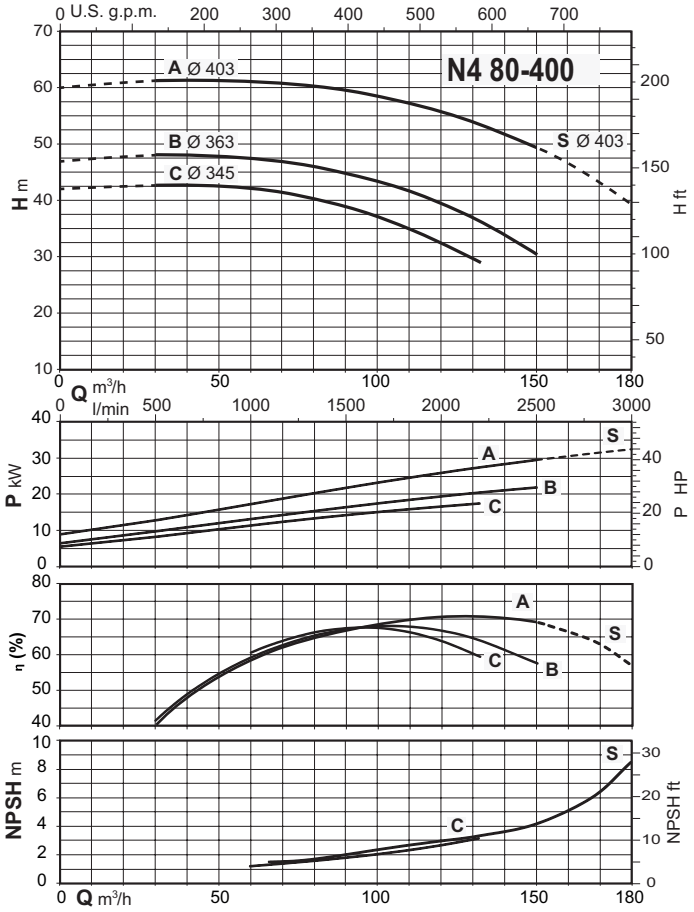

N

## Characteristic curves n ≈ 1450 rpm

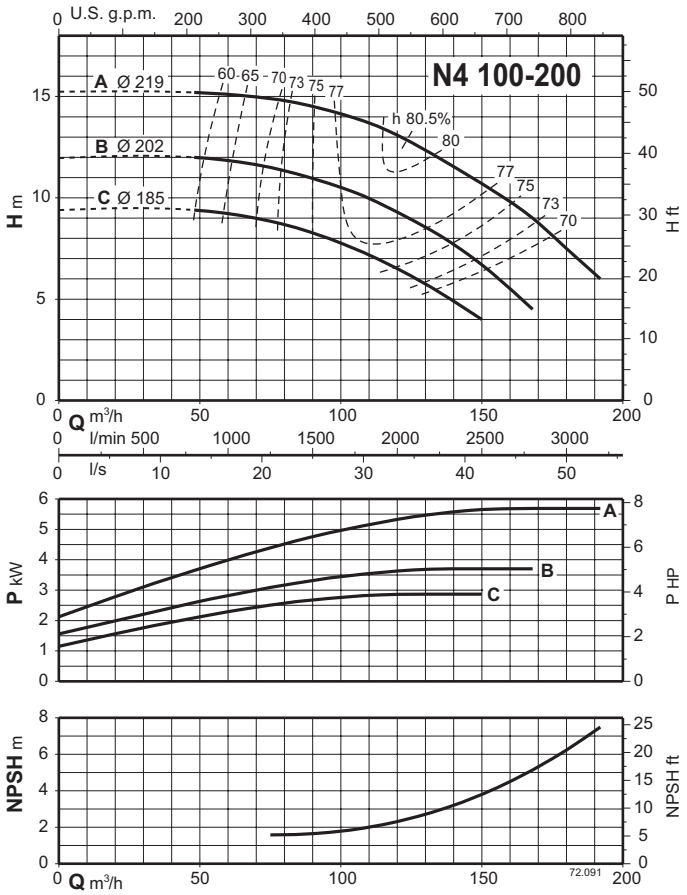


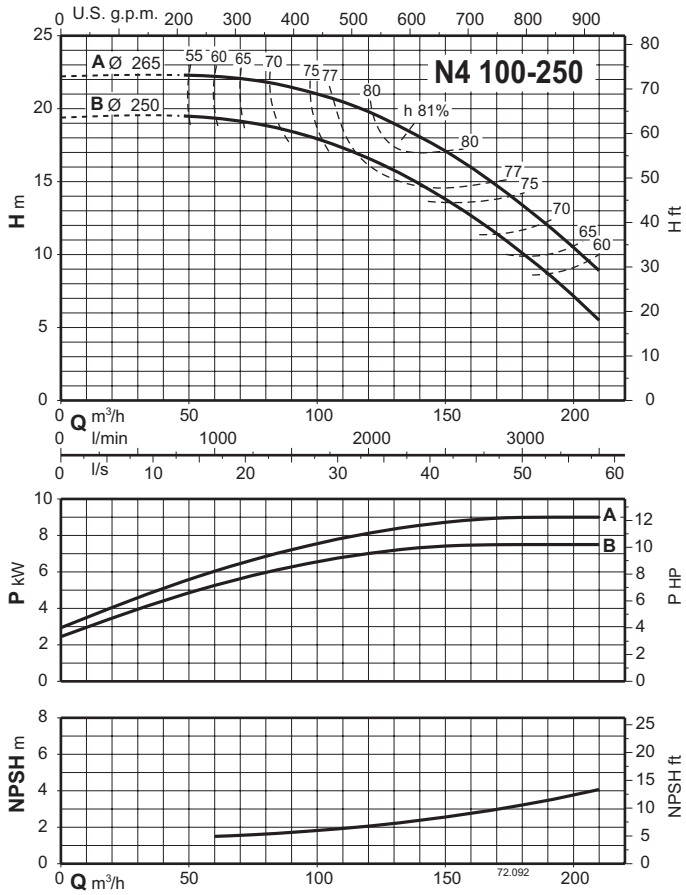


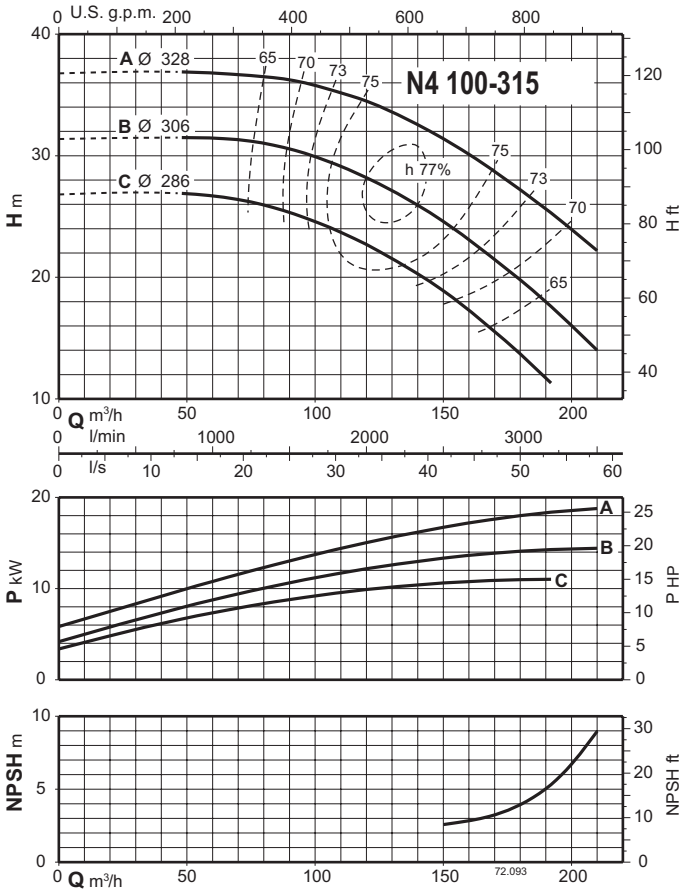


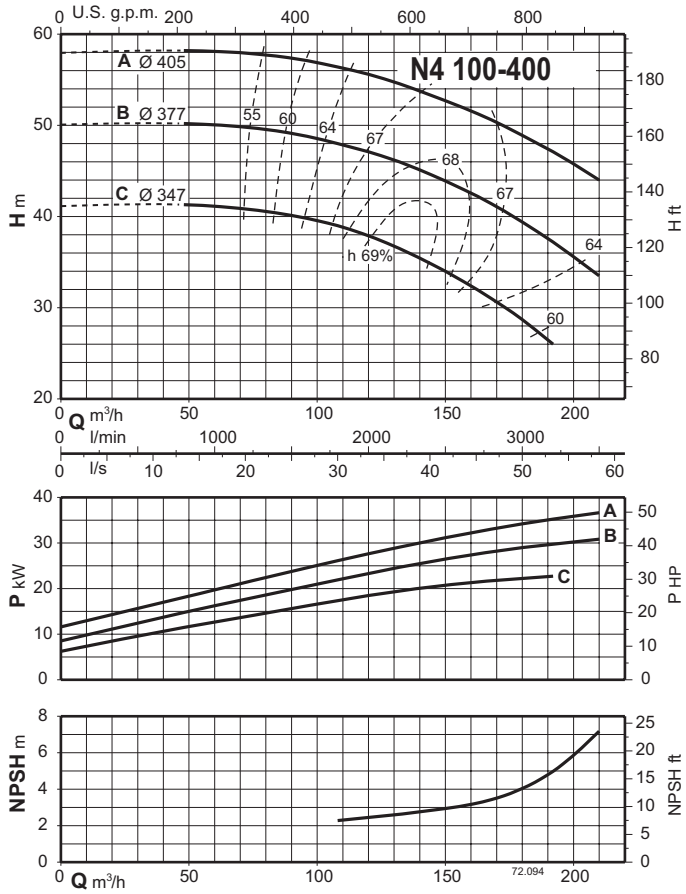

N

## Characteristic curves n ≈ 1450 rpm

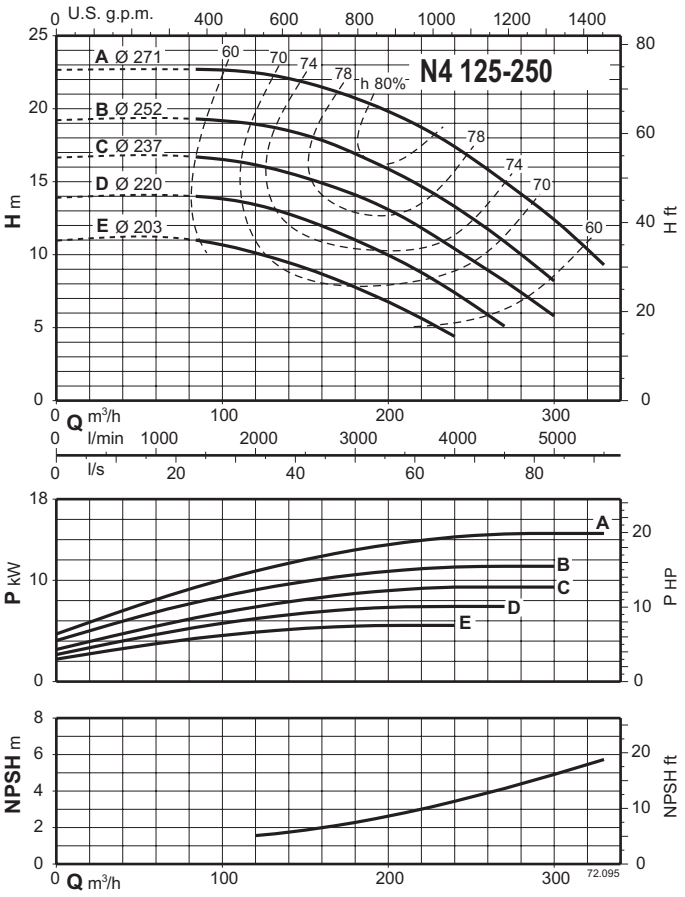


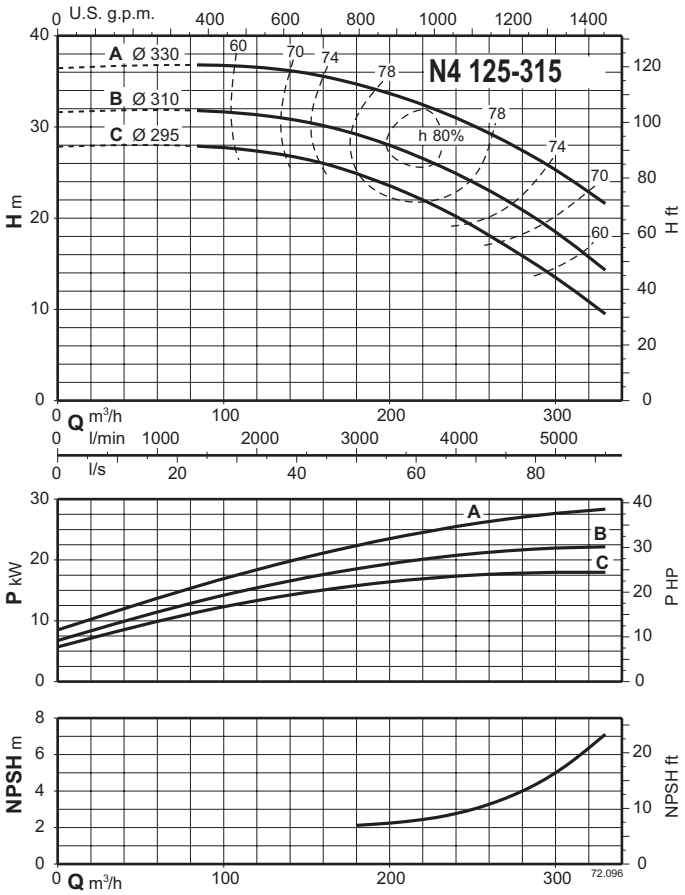


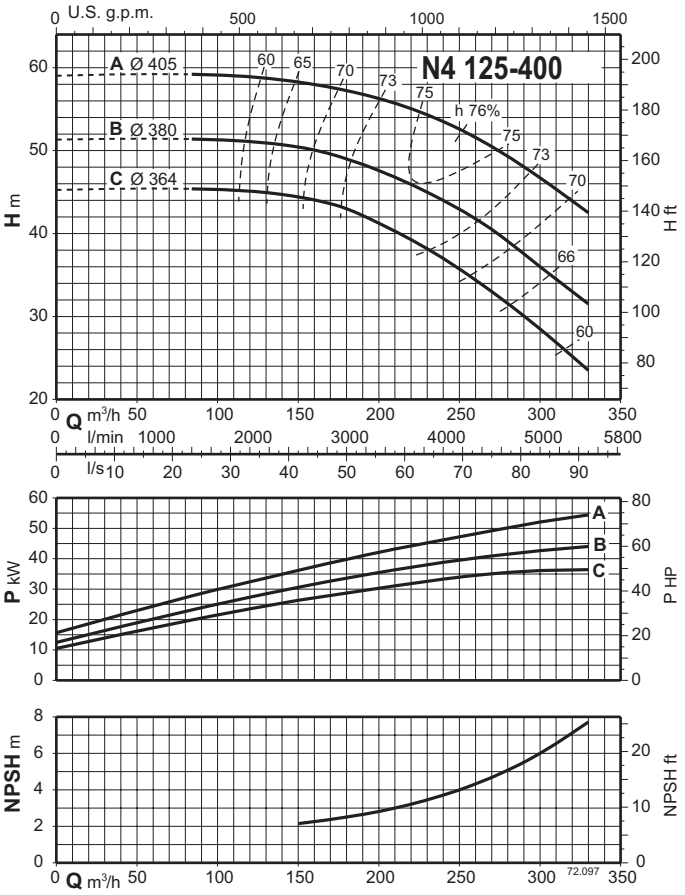

N

## Characteristic curves n ≈ 1450 rpm

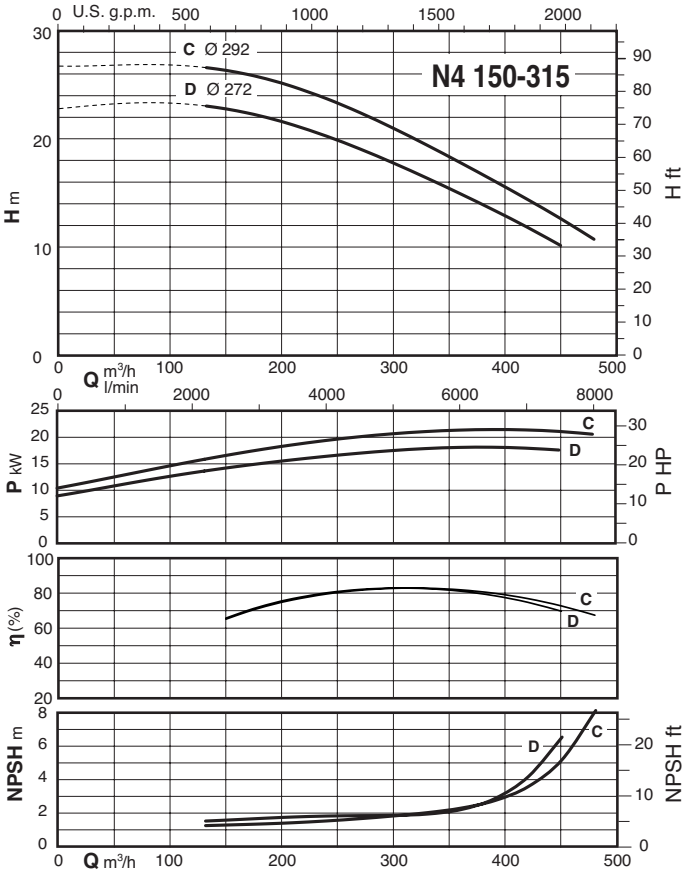


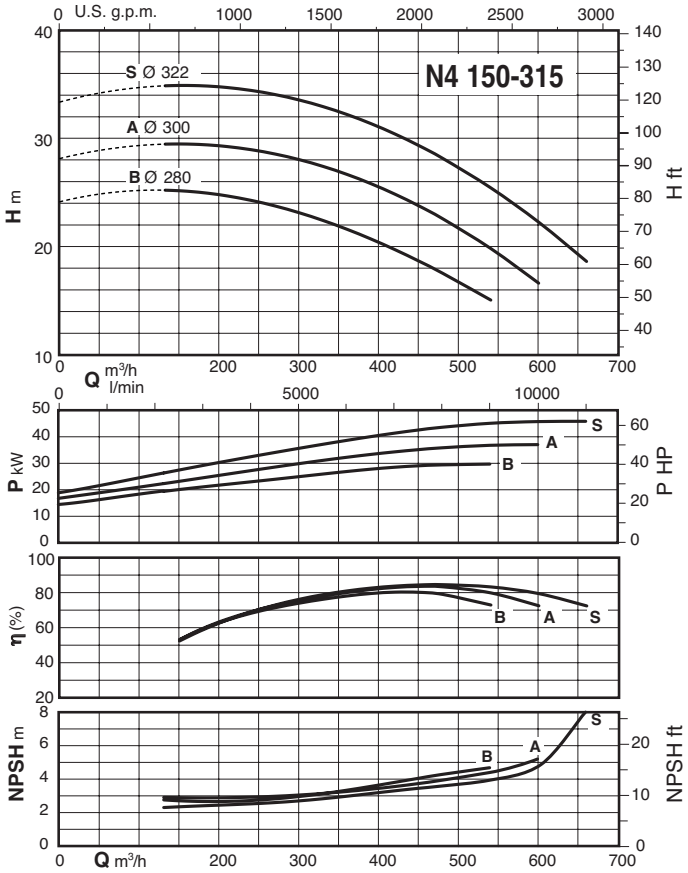


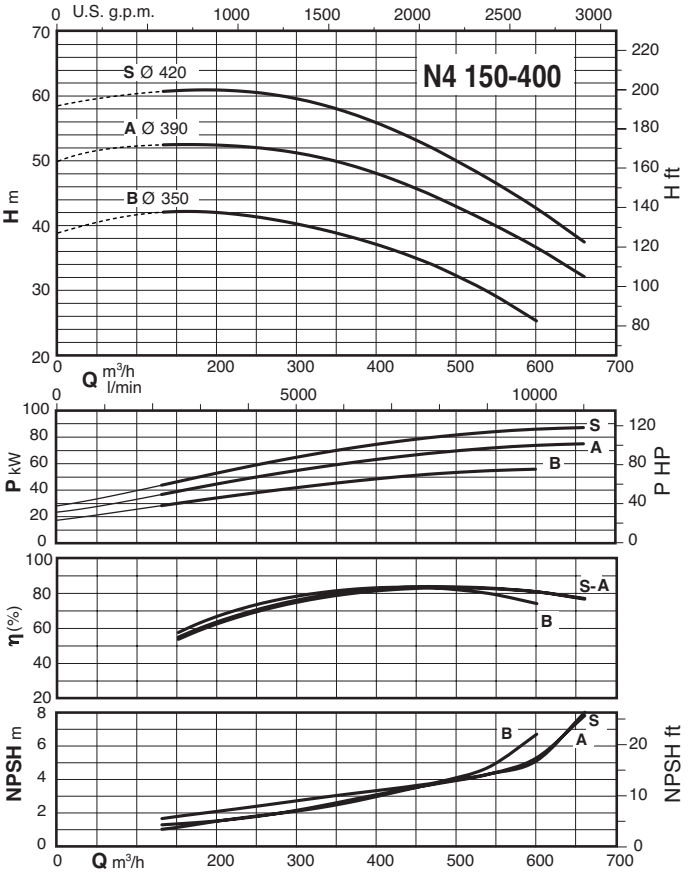

N

## Characteristic curves n ≈ 1450 rpm

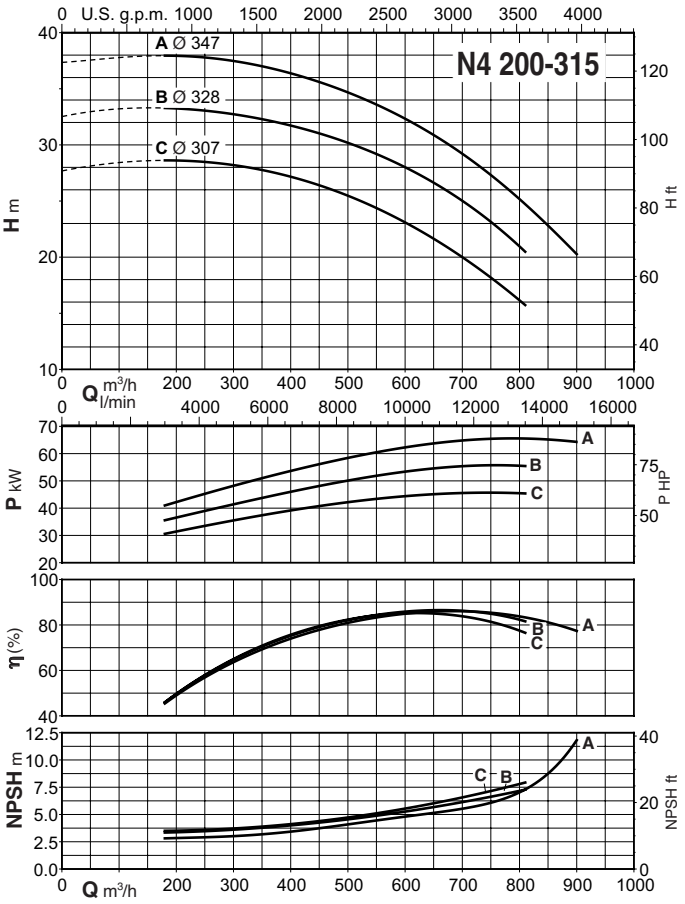


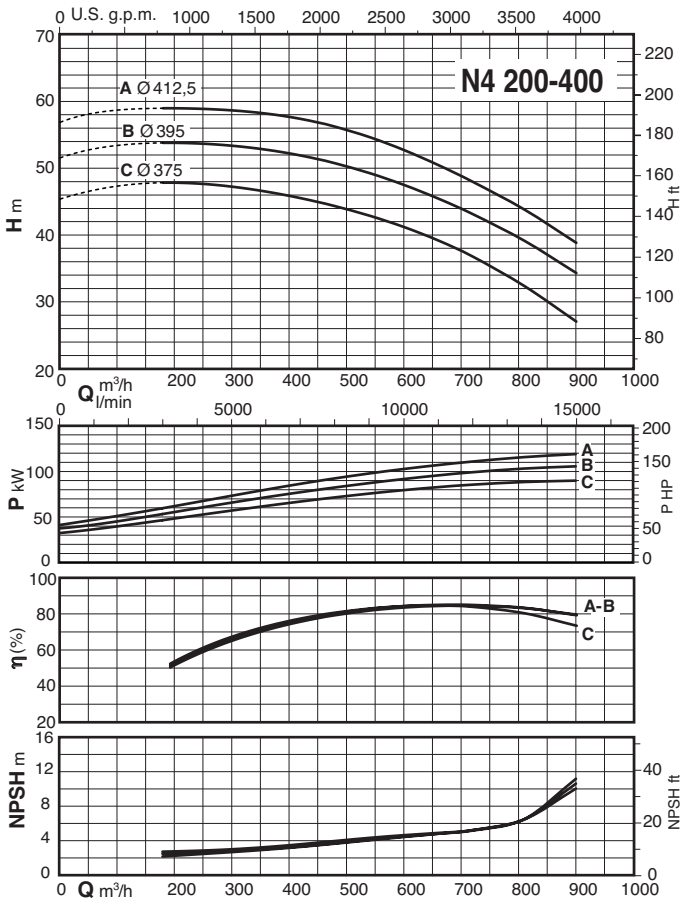

## Interchangeability of parts

| Pump type | Bearing housing | | | | | Pump shaft | | | | | | | Ball bearings | | | | | | Shaft sealing | | | |
|---|---|---|---|---|---|---|---|---|---|---|---|---|---|---|---|---|---|---|---|---|---|---|
| | 1 | 2 | 3 | 4 | 5 | I | II | III | IV | V | VI | VII | 6207 Z<br>6306 Z | 6207 Z<br>3306 Z | 6309 Z<br>3309 Z | 6311 Z<br>3311 Z | NU 311<br>7311 x2 | NU 213<br>7313 x2 | ø 32 | ø 40 | ø 50 | ø 60 |
| N,N4 32-125 | • | | | | | • | | | | | | | • | | | | | | • | | | |
| N,N4 32-160 | • | | | | | | • | | | | | | • | | | | | | • | | | |
| N,N4 32-200 | • | | | | | | • | | | | | | • | | | | | | • | | | |
| N,N4 40-125 | • | | | | | | • | | | | | | • | | | | | | • | | | |
| N,N4 40-160 | • | | | | | | • | | | | | | • | | | | | | • | | | |
| N,N4 40-200C | • | | | | | | • | | | | | | • | | | | | | • | | | |
| N,N4 40-200A-AR-B | • | | | | | | | • | | | | | | • | | | | | • | | | |
| N,N4 40-250 | • | | | | | | | • | | | | | | • | | | | | • | | | |
| N,N4 50-125 | • | | | | | | • | | | | | | • | | | | | | • | | | |
| N,N4 50-160 | • | | | | | | | • | | | | | | • | | | | | • | | | |
| N,N4 50-200 | • | | | | | | | • | | | | | | • | | | | | • | | | |
| N,N4 50-250 | • | | | | | | | • | | | | | | • | | | | | • | | | |
| N,N4 65-125E | • | | | | | | • | | | | | | • | | | | | | • | | | |
| N,N4 65-125A-C | • | | | | | | | • | | | | | | • | | | | | • | | | |
| N,N4 65-160 | • | | | | | | | • | | | | | | • | | | | | • | | | |
| N,N4 65-200 | • | | | | | | | • | | | | | | • | | | | | • | | | |
| N,N4 65-250 | | • | | | | | | | • | | | | | | • | | | | | • | | |
| N4 65-315 | | • | | | | | | | • | | | | | | • | | | | | • | | |
| N,N4 80-160 | • | | | | | | | • | | | | | | • | | | | | • | | | |
| N,N4 80-200 | | • | | | | | | | • | | | | | | • | | | | | • | | |
| N,N4 80-250 | | • | | | | | | | • | | | | | | • | | | | | • | | |
| N4 80-315 | | • | | | | | | | • | | | | | | • | | | | | • | | |
| N4 80-400 | | | • | | | | | | | • | | | | | | • | | | | | • | |
| N,N4 100-200 | | • | | | | | | | • | | | | | | • | | | | | • | | |
| N,N4 100-250 | | • | | | | | | | • | | | | | | • | | | | | • | | |
| N4 100-315 | | • | | | | | | | • | | | | | | • | | | | | • | | |
| N4 100-400 | | | • | | | | | | | • | | | | | | • | | | | | • | |
| N4 125-250 | | • | | | | | | | • | | | | | | • | | | | | • | | |
| N4 125-315 | | | • | | | | | | | • | | | | | | • | | | | | • | |
| N4 125-400 | | | • | | | | | | | • | | | | | | • | | | | | • | |
| N4 150-315 | | | • | | | | | | | • | | | | | | • | | | | | • | |
| N4 150-400 | | | • | | | | | | | • | | | | | | • | | | | | • | |
| N4 150-400S | | | | • | | | | | | | • | | | | | | • | | | | • | |
| N4 200-315 | | | | | • | | | | | | | • | | | | | | • | | | | • |
| N4 200-400 | | | | | • | | | | | | | • | | | | | | • | | | | • |

## Maximum permissible rotation speed

| 3600 1/min | | | 3000 1/min | | | 1800 1/min | | |
|---|---|---|---|---|---|---|---|---|
| 32-125 | 32-160 | 32-200 | | | | | | |
| 40-125 | 40-160 | 40-200 | | | 40-250 | | | |
| 50-125 | 50-160 | 50-200 | | | 50-250 | | | |
| 65-125 | 65-160 | | | 65-200 | 65-250 | | 65-315 | |
| | | 80-200 | 80-160 | | 80-250 | | 80-315 | 80-400 |
| | | 100-200 | | | 100-250 | | 100-315 | 100-400 |
| | | | | | | 125-250 | 125-315 | 125-400 |
| | | | | | | | 150-315 | 150-400 |
| | | | | | | | 200-315 | 200-400 |

## Dimensions and weights

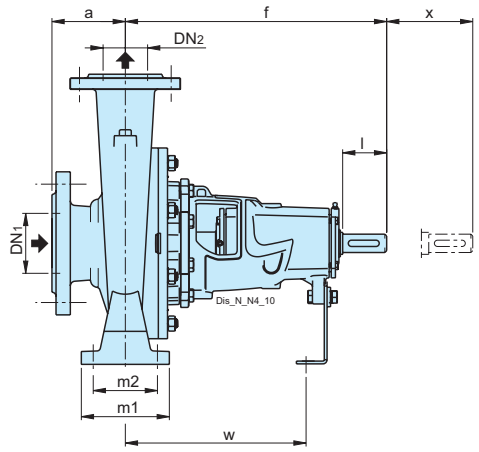


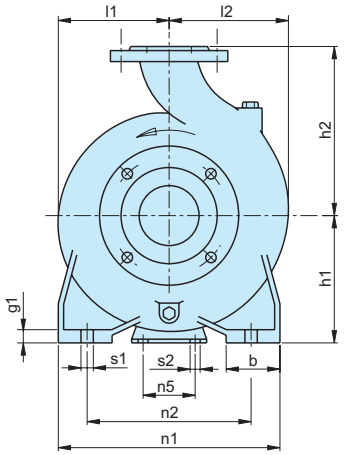


### Shaft extension ISO 775

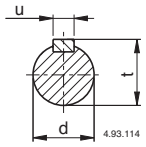


### Parallel key UNI 6604

| mm | | | |
|---|---|---|---|
| d | l | u | t |
| 26 j6 | 50 | 8 | 27 |
| 32 k6 | 80 | 10 | 35 |
| 42 k6 | 110 | 12 | 45 |
| 55 k6 | 110 | 16 | 59 |

### Flanges EN 1092-2

PN 10-16 (DN 200 PN 10)

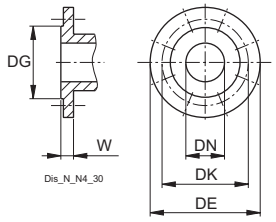


| mm | | | | | | |
|---|---|---|---|---|---|---|
| DN | DG | DK | DE | Holes | | W |
| | | | | N° | ø | |
| 32 | 76 | 100 | 140 | 4 | 19 | 18 |
| 40 | 84 | 110 | 150 | 4 | 19 | 18 |
| 50 | 99 | 125 | 165 | 4 | 19 | 20 |
| 65 | 118 | 145 | 185 | 4 | 19 | 20 |
| 80 | 132 | 160 | 200 | 8 | 19 | 22 |
| 100 | 156 | 180 | 220 | 8 | 19 | 24 |
| 125 | 184 | 210 | 250 | 8 | 19 | 24 |
| 150 | 211 | 240 | 285 | 8 | 23 | 26 |
| 200 | 266 | 295 | 340 | 8* | 23 | 30 |
| 250 | 319 | 355 | 405 | 12 | 28 | 26 |

* * 12 for N4 200-400

| TYPE | Motor | | mm | | | | | | | | | | | | | | | | | | | Kg |
|---|---|---|---|---|---|---|---|---|---|---|---|---|---|---|---|---|---|---|---|---|---|---|
| | kW | HP | DN1 | DN2 | a | b | d | h1 | h2 | f | n1 | n2 | n5 | l1 | l2 | m1 | m2 | s1 | s2 | w | x | Weight |
| N 32-125F/A | 0,55 | 0,75 | 50 | 32 | 80 | 50 | 24 | 112 | 140 | 360 | 190 | 140 | 110 | 93 | 97 | 100 | 70 | 14 | 14 | 260 | 100 | 26 |
| N 32-125D/A | 0,75 | 1 | 50 | 32 | 80 | 50 | 24 | 112 | 140 | 360 | 190 | 140 | 110 | 93 | 97 | 100 | 70 | 14 | 14 | 260 | 100 | - |
| N 32-125D-S/A | 1,1 | 1,5 | 50 | 32 | 80 | 50 | 24 | 112 | 140 | 360 | 190 | 140 | 110 | 93 | 97 | 100 | 70 | 14 | 14 | 260 | 100 | - |
| N 32-125A/A | 1,1 | 1,5 | 50 | 32 | 80 | 50 | 24 | 112 | 140 | 360 | 190 | 140 | 110 | 93 | 97 | 100 | 70 | 14 | 14 | 260 | 100 | 25.9 |
| N 32-125A-S/A | 1,5 | 2 | 50 | 32 | 80 | 50 | 24 | 112 | 140 | 360 | 190 | 140 | 110 | 93 | 97 | 100 | 70 | 14 | 14 | 260 | 100 | - |
| N 32-125S/A | 1,5 | 2 | 50 | 32 | 80 | 50 | 24 | 112 | 140 | 360 | 190 | 140 | 110 | 93 | 97 | 100 | 70 | 14 | 14 | 260 | 100 | 26.3 |
| N 32-160B/A | 1,5 | 2 | 50 | 32 | 80 | 50 | 24 | 132 | 160 | 360 | 240 | 190 | 110 | 120 | 120 | 100 | 70 | 14 | 14 | 260 | 100 | - |
| N 32-160B-S/A | 2,2 | 3 | 50 | 32 | 80 | 50 | 24 | 132 | 160 | 360 | 240 | 190 | 110 | 120 | 120 | 100 | 70 | 14 | 14 | 260 | 100 | - |
| N 32-160A/A | 2,2 | 3 | 50 | 32 | 80 | 50 | 24 | 132 | 160 | 360 | 240 | 190 | 110 | 120 | 120 | 100 | 70 | 14 | 14 | 260 | 100 | 33.3 |
| N 32-160A-S/A | 3 | 4 | 50 | 32 | 80 | 50 | 24 | 132 | 160 | 360 | 240 | 190 | 110 | 120 | 120 | 100 | 70 | 14 | 14 | 260 | 100 | - |
| N 32-200D/A | 2,2 | 3 | 50 | 32 | 80 | 50 | 24 | 160 | 180 | 360 | 240 | 190 | 110 | 140 | 140 | 100 | 70 | 14 | 14 | 260 | 100 | 37.3 |
| N 32-200D-S/A | 3 | 4 | 50 | 32 | 80 | 50 | 24 | 160 | 180 | 360 | 240 | 190 | 110 | 140 | 140 | 100 | 70 | 14 | 14 | 260 | 100 | - |
| N 32-200C/A | 3 | 4 | 50 | 32 | 80 | 50 | 24 | 160 | 180 | 360 | 240 | 190 | 110 | 140 | 140 | 100 | 70 | 14 | 14 | 260 | 100 | - |
| N 32-200A/A | 4 | 5,5 | 50 | 32 | 80 | 50 | 24 | 160 | 180 | 360 | 240 | 190 | 110 | 140 | 140 | 100 | 70 | 14 | 14 | 260 | 100 | 37.6 |
| N 32-200A-S/A | 5,5 | 7,5 | 50 | 32 | 80 | 50 | 24 | 160 | 180 | 360 | 240 | 190 | 110 | 140 | 140 | 100 | 70 | 14 | 14 | 260 | 100 | - |
| N 32L-160C | 2,2 | 3 | 50 | 32 | 80 | 50 | 24 | 132 | 160 | 360 | 240 | 190 | 110 | 120 | 120 | 100 | 70 | 14 | 14 | 260 | 100 | 30 |
| N 32L-160B | 3 | 4 | 50 | 32 | 80 | 50 | 24 | 132 | 160 | 360 | 240 | 190 | 110 | 120 | 120 | 100 | 70 | 14 | 14 | 260 | 100 | 31.5 |
| N 32L-160A | 4 | 5,5 | 50 | 32 | 80 | 50 | 24 | 132 | 160 | 360 | 240 | 190 | 110 | 120 | 120 | 100 | 70 | 14 | 14 | 260 | 100 | 31.9 |
| N 32L-200C | 4 | 5,5 | 50 | 32 | 80 | 50 | 24 | 160 | 180 | 360 | 265 | 212 | 110 | 140 | 140 | 100 | 70 | 14 | 14 | 260 | 100 | 37 |
| N 32L-200B | 5,5 | 7,5 | 50 | 32 | 80 | 50 | 24 | 160 | 180 | 360 | 265 | 212 | 110 | 140 | 140 | 100 | 70 | 14 | 14 | 260 | 100 | 37.4 |
| N 32L-200A | 7,5 | 10 | 50 | 32 | 80 | 50 | 24 | 160 | 180 | 360 | 265 | 212 | 110 | 140 | 140 | 100 | 70 | 14 | 14 | 260 | 100 | 37.5 |
| N 40-125F/A | 1,1 | 1,5 | 65 | 40 | 80 | 50 | 24 | 112 | 140 | 360 | 210 | 160 | 110 | 100 | 113 | 100 | 70 | 14 | 14 | 260 | 100 | - |
| N 40-125C/A | 1,5 | 2 | 65 | 40 | 80 | 50 | 24 | 112 | 140 | 360 | 210 | 160 | 110 | 100 | 113 | 100 | 70 | 14 | 14 | 260 | 100 | - |
| N 40-125A/A | 2,2 | 3 | 65 | 40 | 80 | 50 | 24 | 112 | 140 | 360 | 210 | 160 | 110 | 100 | 113 | 100 | 70 | 14 | 14 | 260 | 100 | 28.2 |
| N 40-160C/A | 2,2 | 3 | 65 | 40 | 80 | 50 | 24 | 132 | 160 | 360 | 240 | 190 | 110 | 119 | 119 | 100 | 70 | 14 | 14 | 260 | 100 | 32.9 |
| N 40-160B/A | 3 | 4 | 65 | 40 | 80 | 50 | 24 | 132 | 160 | 360 | 240 | 190 | 110 | 119 | 119 | 100 | 70 | 14 | 14 | 260 | 100 | 33.1 |
| N 40-160A/A | 4 | 5,5 | 65 | 40 | 80 | 50 | 24 | 132 | 160 | 360 | 240 | 190 | 110 | 119 | 119 | 100 | 70 | 14 | 14 | 260 | 100 | 33.4 |
| N 40-160A-S/A | 5,5 | 7,5 | 65 | 40 | 80 | 50 | 24 | 132 | 160 | 360 | 240 | 190 | 110 | 119 | 119 | 100 | 70 | 14 | 14 | 260 | 100 | - |
| N 40-200D/A | 4 | 5,5 | 65 | 40 | 100 | 50 | 24 | 160 | 180 | 360 | 265 | 212 | 110 | 140 | 140 | 100 | 70 | 14 | 14 | 260 | 100 | - |
| N 40-200C/A | 4 | 5,5 | 65 | 40 | 100 | 50 | 24 | 160 | 180 | 360 | 265 | 212 | 110 | 140 | 140 | 100 | 70 | 14 | 14 | 260 | 100 | 39 |
| N 40-200C-S/A | 5,5 | 7,5 | 65 | 40 | 100 | 50 | 24 | 160 | 180 | 360 | 265 | 212 | 110 | 140 | 140 | 100 | 70 | 14 | 14 | 260 | 100 | - |
| N 40-200D-S/A | 5,5 | 7,5 | 65 | 40 | 100 | 50 | 24 | 160 | 180 | 360 | 265 | 212 | 110 | 140 | 140 | 100 | 70 | 14 | 14 | 260 | 100 | - |
| N 40-200B/A | 5,5 | 7,5 | 65 | 40 | 100 | 50 | 24 | 160 | 180 | 360 | 265 | 212 | 110 | 140 | 140 | 100 | 70 | 14 | 14 | 260 | 100 | 39.3 |
| N 40-200B-S/A | 7,5 | 10 | 65 | 40 | 100 | 50 | 24 | 160 | 180 | 360 | 265 | 212 | 110 | 140 | 140 | 100 | 70 | 14 | 14 | 260 | 100 | - |
| N 40-200AR/A | 5,5 | 7,5 | 65 | 40 | 100 | 50 | 24 | 160 | 180 | 360 | 265 | 212 | 110 | 140 | 140 | 100 | 70 | 14 | 14 | 260 | 100 | - |
| N 40-200AR-S/A | 7,5 | 10 | 65 | 40 | 100 | 50 | 24 | 160 | 180 | 360 | 265 | 212 | 110 | 140 | 140 | 100 | 70 | 14 | 14 | 260 | 100 | - |
| N 40-200A/A | 7,5 | 10 | 65 | 40 | 100 | 50 | 24 | 160 | 180 | 360 | 265 | 212 | 110 | 140 | 140 | 100 | 70 | 14 | 14 | 260 | 100 | 39.7 |
| N 40-250C/A | 11 | 15 | 65 | 40 | 100 | 65 | 24 | 180 | 225 | 360 | 320 | 250 | 110 | 175 | 175 | 125 | 95 | 14 | 14 | 260 | 100 | 53.8 |
| N 40-250B/A | 11 | 15 | 65 | 40 | 100 | 65 | 24 | 180 | 225 | 360 | 320 | 250 | 110 | 175 | 175 | 125 | 95 | 14 | 14 | 260 | 100 | 54.5 |
| N 40-250A/A | 15 | 20 | 65 | 40 | 100 | 65 | 24 | 180 | 225 | 360 | 320 | 250 | 110 | 175 | 175 | 125 | 95 | 14 | 14 | 260 | 100 | 55 |

## Dimensions and weights

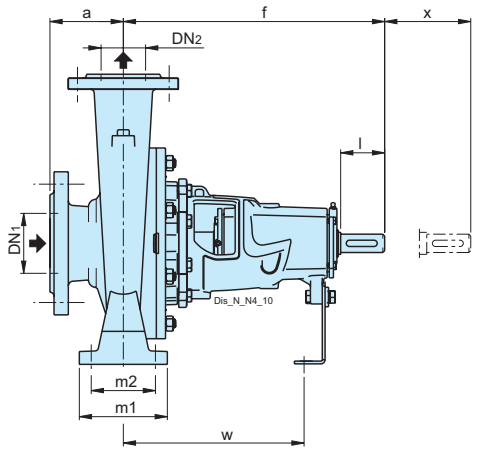


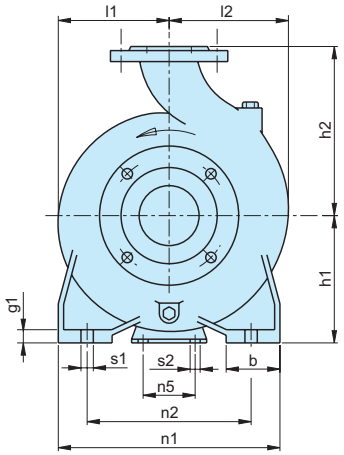


### Shaft extension ISO 775

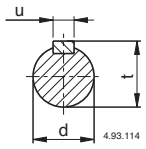


### Parallel key UNI 6604

| mm | | | |
|---|---|---|---|
| d | l | u | t |
| 26 j6 | 50 | 8 | 27 |
| 32 k6 | 80 | 10 | 35 |
| 42 k6 | 110 | 12 | 45 |
| 55 k6 | 110 | 16 | 59 |

| TYPE | Motor | | mm | | | | | | | | | | | | | | | | | | | Kg |
|---|---|---|---|---|---|---|---|---|---|---|---|---|---|---|---|---|---|---|---|---|---|---|
| | kW | HP | DN1 | DN2 | a | b | d | h1 | h2 | f | n1 | n2 | n5 | l1 | l2 | m1 | m2 | s1 | s2 | w | x | Weight |
| N 50-125F/A | 2,2 | 3 | 65 | 50 | 100 | 50 | 24 | 132 | 160 | 360 | 240 | 190 | 110 | 121 | 137 | 100 | 70 | 14 | 14 | 260 | 100 | - |
| N 50-125D/A | 3 | 4 | 65 | 50 | 100 | 50 | 24 | 132 | 160 | 360 | 240 | 190 | 110 | 121 | 137 | 100 | 70 | 14 | 14 | 260 | 100 | 35.4 |
| N 50-125A/A | 4 | 5,5 | 65 | 50 | 100 | 50 | 24 | 132 | 160 | 360 | 240 | 190 | 110 | 121 | 137 | 100 | 70 | 14 | 14 | 260 | 100 | 35.5 |
| N 50-125S/A | 4 | 5,5 | 65 | 50 | 100 | 50 | 24 | 132 | 160 | 360 | 240 | 190 | 110 | 121 | 137 | 100 | 70 | 14 | 14 | 260 | 100 | - |
| N 50-125S-S/A | 5,5 | 7,5 | 65 | 50 | 100 | 50 | 24 | 132 | 160 | 360 | 240 | 190 | 110 | 121 | 137 | 100 | 70 | 14 | 14 | 260 | 100 | - |
| N 50-160B/A | 5,5 | 7,5 | 65 | 50 | 100 | 50 | 24 | 160 | 180 | 360 | 265 | 212 | 110 | 127 | 141 | 100 | 70 | 14 | 14 | 260 | 100 | - |
| N 50-160A/A | 7,5 | 10 | 65 | 50 | 100 | 50 | 24 | 160 | 180 | 360 | 265 | 212 | 110 | 127 | 141 | 100 | 70 | 14 | 14 | 260 | 100 | 37.8 |
| N 50-200B/A | 11 | 15 | 65 | 50 | 100 | 50 | 24 | 160 | 200 | 360 | 265 | 212 | 110 | 140 | 153 | 100 | 70 | 14 | 14 | 260 | 100 | 44.1 |
| N 50-200A/A | 11 | 15 | 65 | 50 | 100 | 50 | 24 | 160 | 200 | 360 | 265 | 212 | 110 | 140 | 153 | 100 | 70 | 14 | 14 | 260 | 100 | 44.6 |
| N 50-200S/A | 15 | 20 | 65 | 50 | 100 | 50 | 24 | 160 | 200 | 360 | 265 | 212 | 110 | 140 | 153 | 100 | 70 | 14 | 14 | 260 | 100 | 44.5 |
| N 50-250C/A | 11 | 15 | 65 | 50 | 100 | 65 | 24 | 180 | 225 | 360 | 320 | 250 | 110 | 175 | 175 | 125 | 95 | 14 | 14 | 260 | 100 | 56 |
| N 50-250B/A | 15 | 20 | 65 | 50 | 100 | 65 | 24 | 180 | 225 | 360 | 320 | 250 | 110 | 175 | 175 | 125 | 95 | 14 | 14 | 260 | 100 | 56.3 |
| N 50-250A/A | 18,5 | 25 | 65 | 50 | 100 | 65 | 24 | 180 | 225 | 360 | 320 | 250 | 110 | 175 | 175 | 125 | 95 | 14 | 14 | 260 | 100 | 56.8 |
| N 50-250S/A | 22 | 30 | 65 | 50 | 100 | 65 | 24 | 180 | 225 | 360 | 320 | 250 | 110 | 175 | 175 | 125 | 95 | 14 | 14 | 260 | 100 | 57.4 |
| N 65-125E/B | 4 | 5,5 | 80 | 65 | 100 | 65 | 24 | 160 | 180 | 360 | 280 | 212 | 110 | 134 | 155 | 125 | 95 | 14 | 14 | 260 | 100 | 37.2 |
| N 65-125C/B | 5,5 | 7,5 | 80 | 65 | 100 | 65 | 24 | 160 | 180 | 360 | 280 | 212 | 110 | 134 | 155 | 125 | 95 | 14 | 14 | 260 | 100 | 38 |
| N 65-125A/B | 7,5 | 10 | 80 | 65 | 100 | 65 | 24 | 160 | 180 | 360 | 280 | 212 | 110 | 134 | 155 | 125 | 95 | 14 | 14 | 260 | 100 | 38.4 |
| N 65-160D/B | 7,5 | 10 | 80 | 65 | 100 | 65 | 24 | 160 | 200 | 360 | 280 | 212 | 110 | 150 | 172 | 125 | 95 | 14 | 14 | 260 | 100 | - |
| N 65-160C/B | 11 | 15 | 80 | 65 | 100 | 65 | 24 | 160 | 200 | 360 | 280 | 212 | 110 | 150 | 172 | 125 | 95 | 14 | 14 | 260 | 100 | - |
| N 65-160B/B | 11 | 15 | 80 | 65 | 100 | 65 | 24 | 160 | 200 | 360 | 280 | 212 | 110 | 150 | 172 | 125 | 95 | 14 | 14 | 260 | 100 | 39.7 |
| N 65-160A/B | 15 | 20 | 80 | 65 | 100 | 65 | 24 | 160 | 200 | 360 | 280 | 212 | 110 | 150 | 172 | 125 | 95 | 14 | 14 | 260 | 100 | 40.2 |
| N 65-160AR | 15 | 20 | 80 | 65 | 100 | 65 | 24 | 160 | 200 | 360 | 280 | 212 | 110 | 150 | 172 | 125 | 95 | 14 | 14 | 260 | 100 | 40.4 |
| N 65-200C/B | 15 | 20 | 80 | 65 | 100 | 65 | 24 | 180 | 225 | 360 | 320 | 250 | 110 | 155 | 175 | 125 | 95 | 14 | 14 | 260 | 140 | - |
| N 65-200B/B | 18,5 | 25 | 80 | 65 | 100 | 65 | 24 | 180 | 225 | 360 | 320 | 250 | 110 | 155 | 175 | 125 | 95 | 14 | 14 | 260 | 140 | 48.4 |
| N 65-200A/B | 22 | 30 | 80 | 65 | 100 | 65 | 24 | 180 | 225 | 360 | 320 | 250 | 110 | 155 | 175 | 125 | 95 | 14 | 14 | 260 | 140 | 48.4 |
| N 65-250C/B | 22 | 30 | 80 | 65 | 100 | 80 | 24 | 200 | 250 | 470 | 360 | 280 | 110 | 175 | 190 | 160 | 120 | 18 | 14 | 340 | 140 | 87.8 |
| N 65-250B/B | 30 | 40 | 80 | 65 | 100 | 80 | 24 | 200 | 250 | 470 | 360 | 280 | 110 | 175 | 190 | 160 | 120 | 18 | 14 | 340 | 140 | 88.3 |
| N 80-160E/B | 7,5 | 10 | 100 | 80 | 125 | 65 | 24 | 180 | 225 | 360 | 320 | 250 | 110 | 165 | 193 | 125 | 95 | 14 | 14 | 260 | 140 | 46.5 |
| N 80-160D/B | 11 | 15 | 100 | 80 | 125 | 65 | 24 | 180 | 225 | 360 | 320 | 250 | 110 | 165 | 193 | 125 | 95 | 14 | 14 | 260 | 140 | - |
| N 80-160C/B | 11 | 15 | 100 | 80 | 125 | 65 | 24 | 180 | 225 | 360 | 320 | 250 | 110 | 165 | 193 | 125 | 95 | 14 | 14 | 260 | 140 | 47.1 |
| N 80-160B/B | 15 | 20 | 100 | 80 | 125 | 65 | 24 | 180 | 225 | 360 | 320 | 250 | 110 | 165 | 193 | 125 | 95 | 14 | 14 | 260 | 140 | - |
| N 80-160A/B | 18,5 | 25 | 100 | 80 | 125 | 65 | 24 | 180 | 225 | 360 | 320 | 250 | 110 | 165 | 193 | 125 | 95 | 14 | 14 | 260 | 140 | 47.9 |
| N 80-200B/B | 22 | 30 | 100 | 80 | 125 | 65 | 32 | 180 | 250 | 470 | 345 | 280 | 110 | 170 | 194 | 125 | 95 | 14 | 14 | 340 | 140 | 76.6 |
| N 80-200A/B | 30 | 40 | 100 | 80 | 125 | 65 | 32 | 180 | 250 | 470 | 345 | 280 | 110 | 170 | 194 | 125 | 95 | 14 | 14 | 340 | 140 | 77.4 |
| N 80-250E/A | 22 | 30 | 100 | 80 | 125 | 80 | 32 | 200 | 280 | 470 | 400 | 315 | 110 | 191 | 210 | 160 | 120 | 18 | 14 | 340 | 140 | 93.2 |
| N 80-250D/A | 30 | 40 | 100 | 80 | 125 | 80 | 32 | 200 | 280 | 470 | 400 | 315 | 110 | 191 | 210 | 160 | 120 | 18 | 14 | 340 | 140 | 93.3 |
| N 80-250C/A | 37 | 50 | 100 | 80 | 125 | 80 | 32 | 200 | 280 | 470 | 400 | 315 | 110 | 191 | 210 | 160 | 120 | 18 | 14 | 340 | 140 | 93.9 |
| N 80-250B/A | 45 | 60 | 100 | 80 | 125 | 80 | 32 | 200 | 280 | 470 | 400 | 315 | 110 | 191 | 210 | 160 | 120 | 18 | 14 | 340 | 140 | - |
| N 80-250A/A | 55 | 75 | 100 | 80 | 125 | 80 | 32 | 200 | 280 | 470 | 400 | 315 | 110 | 191 | 210 | 160 | 120 | 18 | 14 | 340 | 140 | 94.6 |
| N 100-200E/A | 18,5 | 25 | 125 | 100 | 125 | 80 | 32 | 200 | 280 | 470 | 360 | 280 | 110 | 180 | 212 | 160 | 120 | 18 | 14 | 340 | 140 | - |
| N 100-200D/A | 22 | 30 | 125 | 100 | 125 | 80 | 32 | 200 | 280 | 470 | 360 | 280 | 110 | 180 | 212 | 160 | 120 | 18 | 14 | 340 | 140 | - |
| N 100-200C/A | 30 | 40 | 125 | 100 | 125 | 80 | 32 | 200 | 280 | 470 | 360 | 280 | 110 | 180 | 212 | 160 | 120 | 18 | 14 | 340 | 140 | 84.3 |
| N 100-200B/A | 37 | 50 | 125 | 100 | 125 | 80 | 32 | 200 | 280 | 470 | 360 | 280 | 110 | 180 | 212 | 160 | 120 | 18 | 14 | 340 | 140 | 84.1 |
| N 100-200A/A | 45 | 60 | 125 | 100 | 125 | 80 | 32 | 200 | 280 | 470 | 360 | 280 | 110 | 180 | 212 | 160 | 120 | 18 | 14 | 340 | 140 | 85.3 |
| N 100-250B/A | 55 | 75 | 125 | 100 | 140 | 80 | 32 | 225 | 280 | 470 | 400 | 315 | 110 | 205 | 233 | 160 | 120 | 18 | 14 | 340 | 140 | 104.6 |
| N 100-250A/A | 75 | 100 | 125 | 100 | 140 | 80 | 32 | 225 | 280 | 470 | 400 | 315 | 110 | 205 | 233 | 160 | 120 | 18 | 14 | 340 | 140 | 105.8 |

## Dimensions and weights

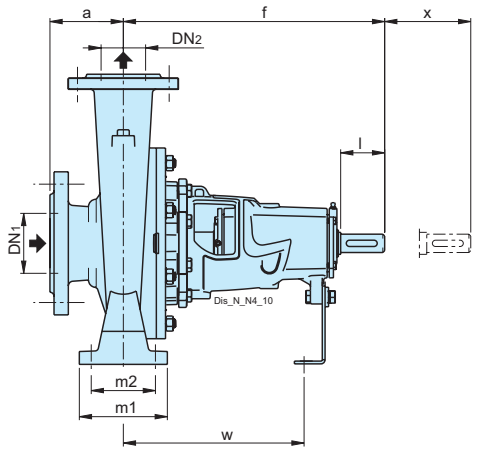


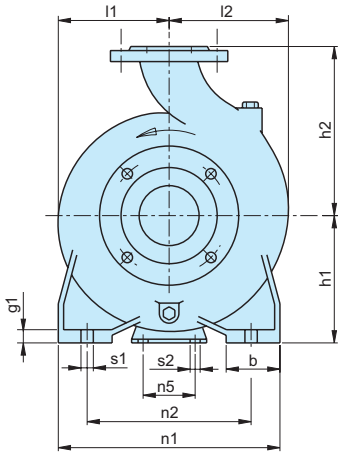


### Shaft extension ISO 775

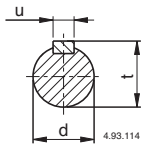


### Parallel key UNI 6604

| mm | | | |
|---|---|---|---|
| d | l | u | t |
| 26 j6 | 50 | 8 | 27 |
| 32 k6 | 80 | 10 | 35 |
| 42 k6 | 110 | 12 | 45 |
| 55 k6 | 110 | 16 | 59 |

| TYPE | Motor | | mm | | | | | | | | | | | | | | | | | | | Kg |
|---|---|---|---|---|---|---|---|---|---|---|---|---|---|---|---|---|---|---|---|---|---|---|
| | kW | HP | DN1 | DN2 | a | b | d | h1 | h2 | f | n1 | n2 | n5 | l1 | l2 | m1 | m2 | s1 | s2 | w | x | Weight |
| N4 32-125F/A | 0,25 | 0,34 | 50 | 32 | 80 | 50 | 24 | 112 | 140 | 360 | 190 | 140 | 110 | 93 | 97 | 100 | 70 | 14 | 14 | 260 | 100 | - |
| N4 32-125D/A | 0,25 | 0,34 | 50 | 32 | 80 | 50 | 24 | 112 | 140 | 360 | 190 | 140 | 110 | 93 | 97 | 100 | 70 | 14 | 14 | 260 | 100 | - |
| N4 32-125A/A | 0,25 | 0,34 | 50 | 32 | 80 | 50 | 24 | 112 | 140 | 360 | 190 | 140 | 110 | 93 | 97 | 100 | 70 | 14 | 14 | 260 | 100 | 26.3 |
| N4 32-160B/A | 0,37 | 0,5 | 50 | 32 | 80 | 50 | 24 | 132 | 160 | 360 | 240 | 190 | 110 | 120 | 120 | 100 | 70 | 14 | 14 | 260 | 100 | - |
| N4 32-160A/A | 0,37 | 0,5 | 50 | 32 | 80 | 50 | 24 | 132 | 160 | 360 | 240 | 190 | 110 | 120 | 120 | 100 | 70 | 14 | 14 | 260 | 100 | - |
| N4 32-200B/A | 0,55 | 0,75 | 50 | 32 | 80 | 50 | 24 | 160 | 180 | 360 | 240 | 190 | 110 | 140 | 140 | 100 | 70 | 14 | 14 | 260 | 100 | - |
| N4 32-200A/A | 0,75 | 1 | 50 | 32 | 80 | 50 | 24 | 160 | 180 | 360 | 240 | 190 | 110 | 140 | 140 | 100 | 70 | 14 | 14 | 260 | 100 | - |
| N4 40-160C/A | 0,37 | 0,5 | 65 | 40 | 80 | 50 | 24 | 132 | 160 | 360 | 240 | 190 | 110 | 119 | 119 | 100 | 70 | 14 | 14 | 260 | 100 | - |
| N4 40-160B/A | 0,55 | 0,75 | 65 | 40 | 80 | 50 | 24 | 132 | 160 | 360 | 240 | 190 | 110 | 119 | 119 | 100 | 70 | 14 | 14 | 260 | 100 | - |
| N4 40-160A/A | 0,75 | 1 | 65 | 40 | 80 | 50 | 24 | 132 | 160 | 360 | 240 | 190 | 110 | 119 | 119 | 100 | 70 | 14 | 14 | 260 | 100 | - |
| N4 40-200B/A | 1,1 | 1,5 | 65 | 40 | 100 | 50 | 24 | 160 | 180 | 360 | 265 | 212 | 110 | 140 | 140 | 100 | 70 | 14 | 14 | 260 | 100 | - |
| N4 40-200A/A | 1,1 | 1,5 | 65 | 40 | 100 | 50 | 24 | 160 | 180 | 360 | 265 | 212 | 110 | 140 | 140 | 100 | 70 | 14 | 14 | 260 | 100 | - |
| N4 40-250C/A | 1,5 | 2 | 65 | 40 | 100 | 65 | 24 | 180 | 225 | 360 | 320 | 250 | 110 | 175 | 175 | 125 | 95 | 14 | 14 | 260 | 100 | - |
| N4 40-250B/A | 2,2 | 3 | 65 | 40 | 100 | 65 | 24 | 180 | 225 | 360 | 320 | 250 | 110 | 175 | 175 | 125 | 95 | 14 | 14 | 260 | 100 | - |
| N4 40-250A/A | 3 | 4 | 65 | 40 | 100 | 65 | 24 | 180 | 225 | 360 | 320 | 250 | 110 | 175 | 175 | 125 | 95 | 14 | 14 | 260 | 100 | - |
| N4 50-125F/A | 0,37 | 0,5 | 65 | 50 | 100 | 50 | 24 | 132 | 160 | 360 | 240 | 190 | 110 | 121 | 137 | 100 | 70 | 14 | 14 | 260 | 100 | - |
| N4 50-125D/A | 0,55 | 0,75 | 65 | 50 | 100 | 50 | 24 | 132 | 160 | 360 | 240 | 190 | 110 | 121 | 137 | 100 | 70 | 14 | 14 | 260 | 100 | - |
| N4 50-125A/A | 0,75 | 1 | 65 | 50 | 100 | 50 | 24 | 132 | 160 | 360 | 240 | 190 | 110 | 121 | 137 | 100 | 70 | 14 | 14 | 260 | 100 | - |
| N4 50-125S/A | 0,75 | 1 | 65 | 50 | 100 | 50 | 24 | 132 | 160 | 360 | 240 | 190 | 110 | 121 | 137 | 100 | 70 | 14 | 14 | 260 | 100 | - |
| N4 50-160B/A | 1,1 | 1,5 | 65 | 50 | 100 | 50 | 24 | 160 | 180 | 360 | 265 | 212 | 110 | 127 | 141 | 100 | 70 | 14 | 14 | 260 | 100 | - |
| N4 50-160A/A | 1,1 | 1,5 | 65 | 50 | 100 | 50 | 24 | 160 | 180 | 360 | 265 | 212 | 110 | 127 | 141 | 100 | 70 | 14 | 14 | 260 | 100 | 38 |
| N4 50-200C/A | 1,1 | 1,5 | 65 | 50 | 100 | 50 | 24 | 160 | 200 | 360 | 265 | 212 | 110 | 140 | 153 | 100 | 70 | 14 | 14 | 260 | 100 | 44.3 |
| N4 50-200B/A | 1,5 | 2 | 65 | 50 | 100 | 50 | 24 | 160 | 200 | 360 | 265 | 212 | 110 | 140 | 153 | 100 | 70 | 14 | 14 | 260 | 100 | 44.4 |
| N4 50-200A/A | 2,2 | 3 | 65 | 50 | 100 | 50 | 24 | 160 | 200 | 360 | 265 | 212 | 110 | 140 | 153 | 100 | 70 | 14 | 14 | 260 | 100 | 44.4 |
| N4 50-250C/A | 2,2 | 3 | 65 | 50 | 100 | 65 | 24 | 180 | 225 | 360 | 320 | 250 | 110 | 175 | 175 | 125 | 95 | 14 | 14 | 260 | 100 | - |
| N4 50-250D | 2,2 | 3 | 65 | 50 | 100 | 65 | 24 | 180 | 225 | 360 | 320 | 250 | 110 | 175 | 175 | 125 | 95 | 14 | 14 | 260 | 100 | - |
| N4 50-250B/A | 3 | 4 | 65 | 50 | 100 | 65 | 24 | 180 | 225 | 360 | 320 | 250 | 110 | 175 | 175 | 125 | 95 | 14 | 14 | 260 | 100 | - |
| N4 50-250A/A | 4 | 5,5 | 65 | 50 | 100 | 65 | 24 | 180 | 225 | 360 | 320 | 250 | 110 | 175 | 175 | 125 | 95 | 14 | 14 | 260 | 100 | - |
| N4 65-125E/B | 0,75 | 1 | 80 | 65 | 100 | 65 | 24 | 160 | 180 | 360 | 280 | 212 | 110 | 134 | 155 | 125 | 95 | 14 | 14 | 260 | 100 | - |
| N4 65-125C/B | 0,75 | 1 | 80 | 65 | 100 | 65 | 24 | 160 | 180 | 360 | 280 | 212 | 110 | 134 | 155 | 125 | 95 | 14 | 14 | 260 | 100 | - |
| N4 65-125A/B | 1,1 | 1,5 | 80 | 65 | 100 | 65 | 24 | 160 | 180 | 360 | 280 | 212 | 110 | 134 | 155 | 125 | 95 | 14 | 14 | 260 | 100 | - |
| N4 65-160C/B | 1,1 | 1,5 | 80 | 65 | 100 | 65 | 24 | 160 | 200 | 360 | 280 | 212 | 110 | 150 | 172 | 125 | 95 | 14 | 14 | 260 | 100 | - |
| N4 65-160B/B | 1,1 | 1,5 | 80 | 65 | 100 | 65 | 24 | 160 | 200 | 360 | 280 | 212 | 110 | 150 | 172 | 125 | 95 | 14 | 14 | 260 | 100 | - |
| N4 65-160A/B | 1,5 | 2 | 80 | 65 | 100 | 65 | 24 | 160 | 200 | 360 | 280 | 212 | 110 | 150 | 172 | 125 | 95 | 14 | 14 | 260 | 100 | - |
| N4 65-160S | 2,2 | 3 | 80 | 65 | 100 | 65 | 24 | 160 | 200 | 360 | 280 | 212 | 110 | 150 | 172 | 125 | 95 | 14 | 14 | 260 | 100 | - |
| N4 65-200B/B | 2,2 | 3 | 80 | 65 | 100 | 65 | 24 | 180 | 225 | 360 | 320 | 250 | 110 | 155 | 175 | 125 | 95 | 14 | 14 | 260 | 140 | - |
| N4 65-200A/B | 3 | 4 | 80 | 65 | 100 | 65 | 24 | 180 | 225 | 360 | 320 | 250 | 110 | 155 | 175 | 125 | 95 | 14 | 14 | 260 | 140 | 48.3 |
| N4 65-250B/B | 4 | 5,5 | 80 | 65 | 100 | 80 | 24 | 200 | 250 | 470 | 360 | 280 | 110 | 175 | 190 | 160 | 120 | 18 | 14 | 340 | 140 | - |
| N4 65-250A/B | 5,5 | 7,5 | 80 | 65 | 100 | 80 | 24 | 200 | 250 | 470 | 360 | 280 | 110 | 175 | 190 | 160 | 120 | 18 | 14 | 340 | 140 | - |
| N4 65-315C/A | 5,5 | 7,5 | 80 | 65 | 125 | 80 | 32 | 225 | 280 | 470 | 400 | 315 | 110 | 220 | 220 | 160 | 120 | 18 | 14 | 340 | 140 | - |
| N4 65-315B/A | 7,5 | 10 | 80 | 65 | 125 | 80 | 32 | 225 | 280 | 470 | 400 | 315 | 110 | 220 | 220 | 160 | 120 | 18 | 14 | 340 | 140 | 127.3 |
| N4 65-315A/A | 11 | 15 | 80 | 65 | 125 | 80 | 32 | 225 | 280 | 470 | 400 | 315 | 110 | 220 | 220 | 160 | 120 | 18 | 14 | 340 | 140 | 128.1 |

# N

## Dimensions and weight

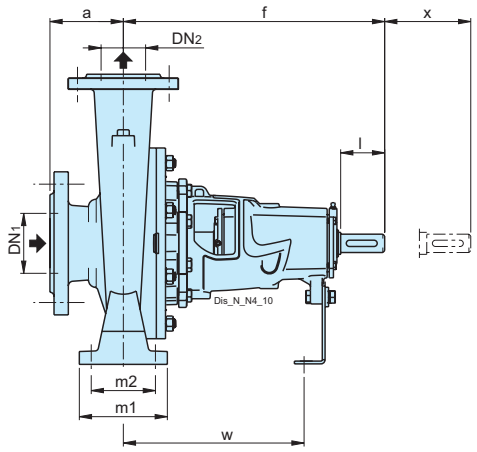


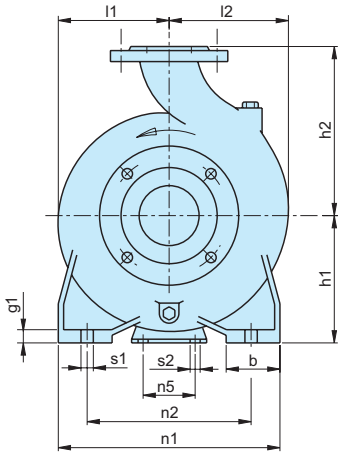


### Shaft extension ISO 775

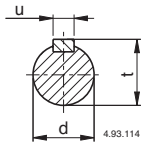


### Parallel key UNI 6604

| mm | | | |
|---|---|---|---|
| d | l | u | t |
| 24 j6 | 50 | 8 | 27 |
| 32 k6 | 80 | 10 | 35 |
| 42 k6 | 110 | 12 | 45 |
| 55 k6 | 110 | 16 | 59 |

| TYPE | Motor | | mm | | | | | | | | | | | | | | | | | | | Kg |
|---|---|---|---|---|---|---|---|---|---|---|---|---|---|---|---|---|---|---|---|---|---|---|
| | kW | HP | DN1 | DN2 | a | b | d | h1 | h2 | f | n1 | n2 | n5 | l1 | l2 | m1 | m2 | s1 | s2 | w | x | Weight |
| N4 80-160C/B | 1,1 | 1,5 | 100 | 80 | 125 | 65 | 24 | 180 | 225 | 360 | 320 | 250 | 110 | 165 | 193 | 125 | 95 | 14 | 14 | 260 | 140 | - |
| N4 80-160B/B | 1,5 | 2 | 100 | 80 | 125 | 65 | 24 | 180 | 225 | 360 | 320 | 250 | 110 | 165 | 193 | 125 | 95 | 14 | 14 | 260 | 140 | - |
| N4 80-160A/B | 2,2 | 3 | 100 | 80 | 125 | 65 | 24 | 180 | 225 | 360 | 320 | 250 | 110 | 165 | 193 | 125 | 95 | 14 | 14 | 260 | 140 | 47.6 |
| N4 80-200C/B | 2,2 | 3 | 100 | 80 | 125 | 65 | 32 | 180 | 250 | 470 | 345 | 280 | 110 | 170 | 194 | 125 | 95 | 14 | 14 | 340 | 140 | - |
| N4 80-200B/B | 3 | 4 | 100 | 80 | 125 | 65 | 32 | 180 | 250 | 470 | 345 | 280 | 110 | 170 | 194 | 125 | 95 | 14 | 14 | 340 | 140 | - |
| N4 80-200A/B | 4 | 5,5 | 100 | 80 | 125 | 65 | 32 | 180 | 250 | 470 | 345 | 280 | 110 | 170 | 194 | 125 | 95 | 14 | 14 | 340 | 140 | 77.4 |
| N4 80-250C/A | 4 | 5,5 | 100 | 80 | 125 | 80 | 32 | 200 | 280 | 470 | 400 | 315 | 110 | 191 | 210 | 160 | 120 | 18 | 14 | 340 | 140 | 93.1 |
| N4 80-250B/A | 5,5 | 7,5 | 100 | 80 | 125 | 80 | 32 | 200 | 280 | 470 | 400 | 315 | 110 | 191 | 210 | 160 | 120 | 18 | 14 | 340 | 140 | - |
| N4 80-250A/A | 7,5 | 10 | 100 | 80 | 125 | 80 | 32 | 200 | 280 | 470 | 400 | 315 | 110 | 191 | 210 | 160 | 120 | 18 | 14 | 340 | 140 | 95 |
| N4 80-315C/B | 11 | 15 | 100 | 80 | 125 | 80 | 32 | 250 | 315 | 470 | 400 | 315 | 110 | 220 | 232 | 160 | 120 | 18 | 14 | 340 | 140 | 126.4 |
| N4 80-315B/B | 11 | 15 | 100 | 80 | 125 | 80 | 32 | 250 | 315 | 470 | 400 | 315 | 110 | 220 | 232 | 160 | 120 | 18 | 14 | 340 | 140 | 127.5 |
| N4 80-315A/B | 15 | 20 | 100 | 80 | 125 | 80 | 32 | 250 | 315 | 470 | 400 | 315 | 110 | 220 | 232 | 160 | 120 | 18 | 14 | 340 | 140 | 127.8 |
| N4 80-315S | 18,5 | 25 | 100 | 80 | 125 | 80 | 32 | 250 | 315 | 470 | 400 | 315 | 110 | 220 | 232 | 160 | 120 | 18 | 14 | 340 | 140 | 128.5 |
| N4 80-400C/B | 18,5 | 25 | 125 | 80 | 125 | 80 | 42 | 280 | 355 | 530 | 435 | 355 | 110 | 268 | 268 | 160 | 120 | 18 | 14 | 370 | 140 | - |
| N4 80-400B/B | 22 | 30 | 125 | 80 | 125 | 80 | 42 | 280 | 355 | 530 | 435 | 355 | 110 | 268 | 268 | 160 | 120 | 18 | 14 | 370 | 140 | 183.7 |
| N4 80-400A/B | 30 | 40 | 125 | 80 | 125 | 80 | 42 | 280 | 355 | 530 | 435 | 355 | 110 | 268 | 268 | 160 | 120 | 18 | 14 | 370 | 140 | 185 |
| N4 80-400S | 37 | 50 | 125 | 80 | 125 | 80 | 42 | 280 | 355 | 530 | 435 | 355 | 110 | 268 | 268 | 160 | 120 | 18 | 14 | 370 | 140 | - |
| N4 100-200C/A | 3 | 4 | 125 | 100 | 125 | 80 | 32 | 200 | 280 | 470 | 360 | 280 | 110 | 180 | 212 | 160 | 120 | 18 | 14 | 340 | 140 | 83.8 |
| N4 100-200B/A | 4 | 5,5 | 125 | 100 | 125 | 80 | 32 | 200 | 280 | 470 | 360 | 280 | 110 | 180 | 212 | 160 | 120 | 18 | 14 | 340 | 140 | 84.8 |
| N4 100-200A/A | 5,5 | 7,5 | 125 | 100 | 125 | 80 | 32 | 200 | 280 | 470 | 360 | 280 | 110 | 180 | 212 | 160 | 120 | 18 | 14 | 340 | 140 | 85.3 |
| N4 100-250B/A | 7,5 | 10 | 125 | 100 | 140 | 80 | 32 | 225 | 280 | 470 | 400 | 315 | 110 | 205 | 233 | 160 | 120 | 18 | 14 | 340 | 140 | 104.9 |
| N4 100-250A/A | 11 | 15 | 125 | 100 | 140 | 80 | 32 | 225 | 280 | 470 | 400 | 315 | 110 | 205 | 233 | 160 | 120 | 18 | 14 | 340 | 140 | 105.6 |
| N4 100-315C/A | 11 | 15 | 125 | 100 | 140 | 80 | 32 | 250 | 315 | 470 | 400 | 315 | 110 | 230 | 250 | 160 | 120 | 18 | 14 | 340 | 140 | - |
| N4 100-315B/A | 15 | 20 | 125 | 100 | 140 | 80 | 32 | 250 | 315 | 470 | 400 | 315 | 110 | 230 | 250 | 160 | 120 | 18 | 14 | 340 | 140 | 139 |
| N4 100-315A/A | 18,5 | 25 | 125 | 100 | 140 | 80 | 32 | 250 | 315 | 470 | 400 | 315 | 110 | 230 | 250 | 160 | 120 | 18 | 14 | 340 | 140 | 139.5 |
| N4 100-400C/A | 22 | 30 | 125 | 100 | 140 | 100 | 42 | 280 | 355 | 530 | 500 | 400 | 110 | 268 | 280 | 200 | 150 | 22 | 14 | 370 | 140 | - |
| N4 100-400B/A | 30 | 40 | 125 | 100 | 140 | 100 | 42 | 280 | 355 | 530 | 500 | 400 | 110 | 268 | 280 | 200 | 150 | 22 | 14 | 370 | 140 | 202 |
| N4 100-400A/A | 37 | 50 | 125 | 100 | 140 | 100 | 42 | 280 | 355 | 530 | 500 | 400 | 110 | 268 | 280 | 200 | 150 | 22 | 14 | 370 | 140 | 204.3 |
| N4 125-250E/A | 5,5 | 7,5 | 150 | 125 | 140 | 80 | 32 | 250 | 355 | 470 | 400 | 315 | 110 | 235 | 268 | 160 | 120 | 18 | 14 | 340 | 140 | - |
| N4 125-250D/A | 7,5 | 10 | 150 | 125 | 140 | 80 | 32 | 250 | 355 | 470 | 400 | 315 | 110 | 235 | 268 | 160 | 120 | 18 | 14 | 340 | 140 | - |
| N4 125-250C/A | 11 | 15 | 150 | 125 | 140 | 80 | 32 | 250 | 355 | 470 | 400 | 315 | 110 | 235 | 268 | 160 | 120 | 18 | 14 | 340 | 140 | 123.4 |
| N4 125-250B/A | 11 | 15 | 150 | 125 | 140 | 80 | 32 | 250 | 355 | 470 | 400 | 315 | 110 | 235 | 268 | 160 | 120 | 18 | 14 | 340 | 140 | 123.8 |
| N4 125-250A/A | 15 | 20 | 150 | 125 | 140 | 80 | 32 | 250 | 355 | 470 | 400 | 315 | 110 | 235 | 268 | 160 | 120 | 18 | 14 | 340 | 140 | 125 |
| N4 125-315C/A | 18,5 | 25 | 150 | 125 | 140 | 100 | 42 | 280 | 355 | 530 | 500 | 400 | 110 | 247 | 278 | 200 | 150 | 22 | 14 | 370 | 140 | - |
| N4 125-315B/A | 22 | 30 | 150 | 125 | 140 | 100 | 42 | 280 | 355 | 530 | 500 | 400 | 110 | 247 | 278 | 200 | 150 | 22 | 14 | 370 | 140 | 181.6 |
| N4 125-315A/A | 30 | 40 | 150 | 125 | 140 | 100 | 42 | 280 | 355 | 530 | 500 | 400 | 110 | 247 | 278 | 200 | 150 | 22 | 14 | 370 | 140 | 182.6 |
| N4 125-400C/A | 37 | 50 | 150 | 125 | 140 | 100 | 42 | 315 | 400 | 530 | 500 | 400 | 110 | 280 | 305 | 200 | 150 | 22 | 14 | 370 | 140 | 215.2 |
| N4 125-400B/A | 45 | 60 | 150 | 125 | 140 | 100 | 42 | 315 | 400 | 530 | 500 | 400 | 110 | 280 | 305 | 200 | 150 | 22 | 14 | 370 | 140 | 216.2 |
| N4 125-400A/A | 55 | 75 | 150 | 125 | 140 | 100 | 42 | 315 | 400 | 530 | 500 | 400 | 110 | 280 | 305 | 200 | 150 | 22 | 14 | 370 | 140 | 217.2 |
| N4 150-315D/B | 18,5 | 25 | 200 | 150 | 160 | 100 | 42 | 280 | 400 | 530 | 550 | 450 | 110 | 256 | 307 | 200 | 150 | 22 | 14 | 370 | 140 | 199.1 |
| N4 150-315C/B | 22 | 30 | 200 | 150 | 160 | 100 | 42 | 280 | 400 | 530 | 550 | 450 | 110 | 256 | 307 | 200 | 150 | 22 | 14 | 370 | 140 | 201.4 |
| N4 150-315B/B | 30 | 40 | 200 | 150 | 160 | 100 | 42 | 280 | 400 | 530 | 550 | 450 | 110 | 256 | 307 | 200 | 150 | 22 | 14 | 370 | 140 | 198.2 |
| N4 150-315A/B | 37 | 50 | 200 | 150 | 160 | 100 | 42 | 280 | 400 | 530 | 550 | 450 | 110 | 256 | 307 | 200 | 150 | 22 | 14 | 370 | 140 | 199.7 |
| N4 150-315S | 45 | 60 | 200 | 150 | 160 | 100 | 42 | 280 | 400 | 530 | 550 | 450 | 110 | 256 | 307 | 200 | 150 | 22 | 14 | 370 | 140 | 211 |
| N4 150-400B/B | 55 | 75 | 200 | 150 | 160 | 100 | 42 | 315 | 450 | 530 | 550 | 450 | 110 | 295 | 328 | 200 | 150 | 22 | 14 | 370 | 140 | 250 |
| N4 150-400A/B | 75 | 100 | 200 | 150 | 160 | 100 | 42 | 315 | 450 | 530 | 550 | 450 | 110 | 295 | 328 | 200 | 150 | 22 | 14 | 370 | 140 | 257 |
| N4 150-400S | 90 | 120 | 200 | 150 | 160 | 100 | 42 | 315 | 450 | 530 | 550 | 450 | 110 | 295 | 328 | 200 | 150 | 22 | 14 | 370 | 140 | 259 |
| N4 200-315C | 45 | 60 | 250 | 200 | 180 | 125 | 55 | 355 | 450 | 630 | 630 | 500 | 110 | 322 | 370 | 250 | 190 | 27 | 14 | 462.5 | 200 | - |
| N4 200-315B | 55 | 75 | 250 | 200 | 180 | 125 | 55 | 355 | 450 | 630 | 630 | 500 | 110 | 322 | 370 | 250 | 190 | 27 | 14 | 462.5 | 200 | - |
| N4 200-315A | 75 | 100 | 250 | 200 | 180 | 125 | 55 | 355 | 450 | 630 | 630 | 500 | 110 | 322 | 370 | 250 | 190 | 27 | 14 | 462.5 | 200 | - |
| N4 200-400C | 90 | 120 | 250 | 200 | 180 | 125 | 55 | 355 | 500 | 630 | 630 | 500 | 110 | 322 | 370 | 250 | 190 | 27 | 14 | 462.5 | 200 | - |
| N4 200-400B | 110 | 150 | 250 | 200 | 180 | 125 | 55 | 355 | 500 | 630 | 630 | 500 | 110 | 322 | 370 | 250 | 190 | 27 | 14 | 462.5 | 200 | - |
| N4 200-400A | 132 | 180 | 250 | 200 | 180 | 125 | 55 | 355 | 500 | 630 | 630 | 500 | 110 | 322 | 370 | 250 | 190 | 27 | 14 | 462.5 | 200 | 353 |

N

## Dimensions and weights

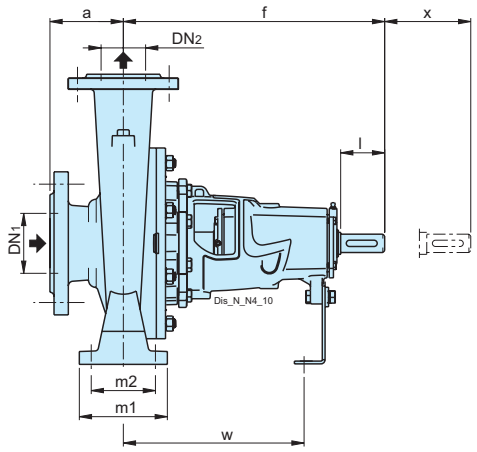


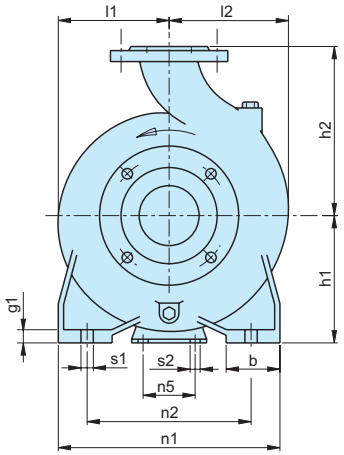


### Shaft extension ISO 775

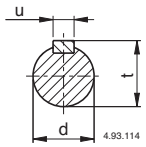


### Parallel key UNI 6604

| mm | | | |
|---|---|---|---|
| d | l | u | t |
| 26 j6 | 50 | 8 | 27 |
| 32 k6 | 80 | 10 | 35 |
| 42 k6 | 110 | 12 | 45 |
| 55 k6 | 110 | 16 | 59 |

| TYPE | Motor | | mm | | | | | | | | | | | | | | | | | | | Kg |
|---|---|---|---|---|---|---|---|---|---|---|---|---|---|---|---|---|---|---|---|---|---|---|
| | kW | HP | DN1 | DN2 | a | b | d | h1 | h2 | f | n1 | n2 | n5 | l1 | l2 | m1 | m2 | s1 | s2 | w | x | Weight |
| BN 32-125F/A | 0,55 | 0,75 | 50 | 32 | 80 | 50 | 24 | 112 | 140 | 360 | 190 | 140 | 110 | 93 | 97 | 100 | 70 | 14 | 14 | 260 | 100 | - |
| BN 32-125D/A | 0,75 | 1 | 50 | 32 | 80 | 50 | 24 | 112 | 140 | 360 | 190 | 140 | 110 | 93 | 97 | 100 | 70 | 14 | 14 | 260 | 100 | - |
| BN 32-125D-S/A | 1,1 | 1,5 | 50 | 32 | 80 | 50 | 24 | 112 | 140 | 360 | 190 | 140 | 110 | 93 | 97 | 100 | 70 | 14 | 14 | 260 | 100 | - |
| BN 32-125A/A | 1,1 | 1,5 | 50 | 32 | 80 | 50 | 24 | 112 | 140 | 360 | 190 | 140 | 110 | 93 | 97 | 100 | 70 | 14 | 14 | 260 | 100 | - |
| BN 32-125A-S/A | 1,5 | 2 | 50 | 32 | 80 | 50 | 24 | 112 | 140 | 360 | 190 | 140 | 110 | 93 | 97 | 100 | 70 | 14 | 14 | 260 | 100 | - |
| BN 32-125S/A | 1,5 | 2 | 50 | 32 | 80 | 50 | 24 | 112 | 140 | 360 | 190 | 140 | 110 | 93 | 97 | 100 | 70 | 14 | 14 | 260 | 100 | - |
| BN 32-160B/A | 1,5 | 2 | 50 | 32 | 80 | 50 | 24 | 132 | 160 | 360 | 240 | 190 | 110 | 120 | 120 | 100 | 70 | 14 | 14 | 260 | 100 | - |
| BN 32-160B-S/A | 2,2 | 3 | 50 | 32 | 80 | 50 | 24 | 132 | 160 | 360 | 240 | 190 | 110 | 120 | 120 | 100 | 70 | 14 | 14 | 260 | 100 | - |
| BN 32-160A/A | 2,2 | 3 | 50 | 32 | 80 | 50 | 24 | 132 | 160 | 360 | 240 | 190 | 110 | 120 | 120 | 100 | 70 | 14 | 14 | 260 | 100 | - |
| BN 32-160A-S/A | 3 | 4 | 50 | 32 | 80 | 50 | 24 | 132 | 160 | 360 | 240 | 190 | 110 | 120 | 120 | 100 | 70 | 14 | 14 | 260 | 100 | - |
| BN 32-200D/A | 2,2 | 3 | 50 | 32 | 80 | 50 | 24 | 160 | 180 | 360 | 240 | 190 | 110 | 140 | 140 | 100 | 70 | 14 | 14 | 260 | 100 | - |
| BN 32-200D-S/A | 3 | 4 | 50 | 32 | 80 | 50 | 24 | 160 | 180 | 360 | 240 | 190 | 110 | 140 | 140 | 100 | 70 | 14 | 14 | 260 | 100 | - |
| BN 32-200C/A | 3 | 4 | 50 | 32 | 80 | 50 | 24 | 160 | 180 | 360 | 240 | 190 | 110 | 140 | 140 | 100 | 70 | 14 | 14 | 260 | 100 | - |
| BN 32-200A/A | 4 | 5,5 | 50 | 32 | 80 | 50 | 24 | 160 | 180 | 360 | 240 | 190 | 110 | 140 | 140 | 100 | 70 | 14 | 14 | 260 | 100 | - |
| BN 32-200A-S/A | 5,5 | 7,5 | 50 | 32 | 80 | 50 | 24 | 160 | 180 | 360 | 240 | 190 | 110 | 140 | 140 | 100 | 70 | 14 | 14 | 260 | 100 | - |
| BN 32L-160C | 2,2 | 3 | 50 | 32 | 80 | 50 | 24 | 132 | 160 | 360 | 240 | 190 | 110 | 120 | 120 | 100 | 70 | 14 | 14 | 260 | 100 | - |
| BN 32L-160B | 3 | 4 | 50 | 32 | 80 | 50 | 24 | 132 | 160 | 360 | 240 | 190 | 110 | 120 | 120 | 100 | 70 | 14 | 14 | 260 | 100 | - |
| BN 32L-160A | 4 | 5,5 | 50 | 32 | 80 | 50 | 24 | 132 | 160 | 360 | 240 | 190 | 110 | 120 | 120 | 100 | 70 | 14 | 14 | 260 | 100 | - |
| BN 32L-200C | 4 | 5,5 | 50 | 32 | 80 | 50 | 24 | 160 | 180 | 360 | 265 | 212 | 110 | 140 | 140 | 100 | 70 | 14 | 14 | 260 | 100 | - |
| BN 32L-200B | 5,5 | 7,5 | 50 | 32 | 80 | 50 | 24 | 160 | 180 | 360 | 265 | 212 | 110 | 140 | 140 | 100 | 70 | 14 | 14 | 260 | 100 | - |
| BN 32L-200A | 7,5 | 10 | 50 | 32 | 80 | 50 | 24 | 160 | 180 | 360 | 265 | 212 | 110 | 140 | 140 | 100 | 70 | 14 | 14 | 260 | 100 | - |
| BN 40-125F/A | 1,1 | 1,5 | 65 | 40 | 80 | 50 | 24 | 112 | 140 | 360 | 210 | 160 | 110 | 100 | 113 | 100 | 70 | 14 | 14 | 260 | 100 | - |
| BN 40-125C/A | 1,5 | 2 | 65 | 40 | 80 | 50 | 24 | 112 | 140 | 360 | 210 | 160 | 110 | 100 | 113 | 100 | 70 | 14 | 14 | 260 | 100 | - |
| BN 40-125A/A | 2,2 | 3 | 65 | 40 | 80 | 50 | 24 | 112 | 140 | 360 | 210 | 160 | 110 | 100 | 113 | 100 | 70 | 14 | 14 | 260 | 100 | - |
| BN 40-160C/A | 2,2 | 3 | 65 | 40 | 80 | 50 | 24 | 132 | 160 | 360 | 240 | 190 | 110 | 119 | 119 | 100 | 70 | 14 | 14 | 260 | 100 | - |
| BN 40-160B/A | 3 | 4 | 65 | 40 | 80 | 50 | 24 | 132 | 160 | 360 | 240 | 190 | 110 | 119 | 119 | 100 | 70 | 14 | 14 | 260 | 100 | - |
| BN 40-160A/A | 4 | 5,5 | 65 | 40 | 80 | 50 | 24 | 132 | 160 | 360 | 240 | 190 | 110 | 119 | 119 | 100 | 70 | 14 | 14 | 260 | 100 | - |
| BN 40-160A-S/A | 5,5 | 7,5 | 65 | 40 | 80 | 50 | 24 | 132 | 160 | 360 | 240 | 190 | 110 | 119 | 119 | 100 | 70 | 14 | 14 | 260 | 100 | - |
| BN 40-200C/A | 4 | 5,5 | 65 | 40 | 100 | 50 | 24 | 160 | 180 | 360 | 265 | 212 | 110 | 140 | 140 | 100 | 70 | 14 | 14 | 260 | 100 | - |
| BN 40-200C-S/A | 5,5 | 7,5 | 65 | 40 | 100 | 50 | 24 | 160 | 180 | 360 | 265 | 212 | 110 | 140 | 140 | 100 | 70 | 14 | 14 | 260 | 100 | - |
| BN 40-200D/A | 4 | 5,5 | 65 | 40 | 100 | 50 | 24 | 160 | 180 | 360 | 265 | 212 | 110 | 140 | 140 | 100 | 70 | 14 | 14 | 260 | 100 | - |
| BN 40-200D-S/A | 5,5 | 7,5 | 65 | 40 | 100 | 50 | 24 | 160 | 180 | 360 | 265 | 212 | 110 | 140 | 140 | 100 | 70 | 14 | 14 | 260 | 100 | - |
| BN 40-200B/A | 5,5 | 7,5 | 65 | 40 | 100 | 50 | 24 | 160 | 180 | 360 | 265 | 212 | 110 | 140 | 140 | 100 | 70 | 14 | 14 | 260 | 100 | - |
| BN 40-200B-S/A | 7,5 | 10 | 65 | 40 | 100 | 50 | 24 | 160 | 180 | 360 | 265 | 212 | 110 | 140 | 140 | 100 | 70 | 14 | 14 | 260 | 100 | - |
| BN 40-200AR/A | 5,5 | 7,5 | 65 | 40 | 100 | 50 | 24 | 160 | 180 | 360 | 265 | 212 | 110 | 140 | 140 | 100 | 70 | 14 | 14 | 260 | 100 | - |
| BN 40-200AR-S/A | 7,5 | 10 | 65 | 40 | 100 | 50 | 24 | 160 | 180 | 360 | 265 | 212 | 110 | 140 | 140 | 100 | 70 | 14 | 14 | 260 | 100 | - |
| BN 40-200A/A | 7,5 | 10 | 65 | 40 | 100 | 50 | 24 | 160 | 180 | 360 | 265 | 212 | 110 | 140 | 140 | 100 | 70 | 14 | 14 | 260 | 100 | - |
| BN 40-250C/A | 11 | 15 | 65 | 40 | 100 | 65 | 24 | 180 | 225 | 360 | 320 | 250 | 110 | 175 | 175 | 125 | 95 | 14 | 14 | 260 | 100 | - |
| BN 40-250B/A | 11 | 15 | 65 | 40 | 100 | 65 | 24 | 180 | 225 | 360 | 320 | 250 | 110 | 175 | 175 | 125 | 95 | 14 | 14 | 260 | 100 | - |
| BN 40-250A/A | 15 | 20 | 65 | 40 | 100 | 65 | 24 | 180 | 225 | 360 | 320 | 250 | 110 | 175 | 175 | 125 | 95 | 14 | 14 | 260 | 100 | - |
| BN 50-125F/A | 2,2 | 3 | 65 | 50 | 100 | 50 | 24 | 132 | 160 | 360 | 240 | 190 | 110 | 121 | 137 | 100 | 70 | 14 | 14 | 260 | 100 | - |
| BN 50-125D/A | 3 | 4 | 65 | 50 | 100 | 50 | 24 | 132 | 160 | 360 | 240 | 190 | 110 | 121 | 137 | 100 | 70 | 14 | 14 | 260 | 100 | - |
| BN 50-125A/A | 4 | 5,5 | 65 | 50 | 100 | 50 | 24 | 132 | 160 | 360 | 240 | 190 | 110 | 121 | 137 | 100 | 70 | 14 | 14 | 260 | 100 | - |
| BN 50-160B/A | 5,5 | 7,5 | 65 | 50 | 100 | 50 | 24 | 160 | 180 | 360 | 265 | 212 | 110 | 127 | 141 | 100 | 70 | 14 | 14 | 260 | 100 | - |
| BN 50-125S/A | 4 | 5,5 | 65 | 50 | 100 | 50 | 24 | 132 | 160 | 360 | 240 | 190 | 110 | 121 | 137 | 100 | 70 | 14 | 14 | 260 | 100 | - |
| BN 50-125S-S/A | 5,5 | 7,5 | 65 | 50 | 100 | 50 | 24 | 132 | 160 | 360 | 240 | 190 | 110 | 121 | 137 | 100 | 70 | 14 | 14 | 260 | 100 | - |
| BN 50-160A/A | 7,5 | 10 | 65 | 50 | 100 | 50 | 24 | 160 | 180 | 360 | 265 | 212 | 110 | 127 | 141 | 100 | 70 | 14 | 14 | 260 | 100 | - |
| BN 50-200B/A | 11 | 15 | 65 | 50 | 100 | 50 | 24 | 160 | 200 | 360 | 265 | 212 | 110 | 140 | 153 | 100 | 70 | 14 | 14 | 260 | 100 | - |
| BN 50-200A/A | 11 | 15 | 65 | 50 | 100 | 50 | 24 | 160 | 200 | 360 | 265 | 212 | 110 | 140 | 153 | 100 | 70 | 14 | 14 | 260 | 100 | - |
| BN 50-200S/A | 15 | 20 | 65 | 50 | 100 | 50 | 24 | 160 | 200 | 360 | 265 | 212 | 110 | 140 | 153 | 100 | 70 | 14 | 14 | 260 | 100 | 52.5 |
| BN 50-250C/A | 11 | 15 | 65 | 50 | 100 | 65 | 24 | 180 | 225 | 360 | 320 | 250 | 110 | 175 | 175 | 125 | 95 | 14 | 14 | 260 | 100 | - |
| BN 50-250B/A | 15 | 20 | 65 | 50 | 100 | 65 | 24 | 180 | 225 | 360 | 320 | 250 | 110 | 175 | 175 | 125 | 95 | 14 | 14 | 260 | 100 | - |
| BN 50-250A/A | 18,5 | 25 | 65 | 50 | 100 | 65 | 24 | 180 | 225 | 360 | 320 | 250 | 110 | 175 | 175 | 125 | 95 | 14 | 14 | 260 | 100 | - |
| BN 50-250S/A | 22 | 30 | 65 | 50 | 100 | 65 | 24 | 180 | 225 | 360 | 320 | 250 | 110 | 175 | 175 | 125 | 95 | 14 | 14 | 260 | 100 | - |

## Dimensions and weights

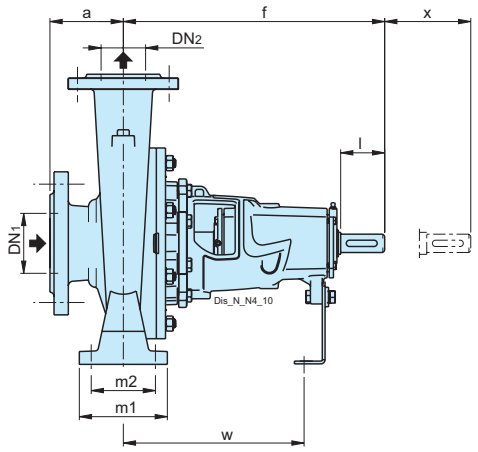


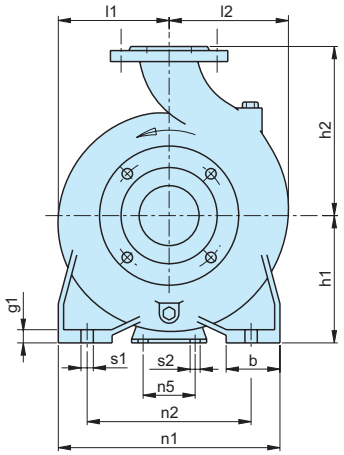


### Shaft extension ISO 775

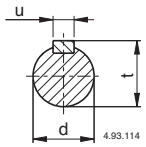


### Parallel key UNI 6604

| mm | | | |
|---|---|---|---|
| d | l | u | t |
| 26 j6 | 50 | 8 | 27 |
| 32 k6 | 80 | 10 | 35 |
| 42 k6 | 110 | 12 | 45 |
| 55 k6 | 110 | 16 | 59 |

| TYPE | Motor | | mm | | | | | | | | | | | | | | | | | | |
|---|---|---|---|---|---|---|---|---|---|---|---|---|---|---|---|---|---|---|---|---|---|
| | kW | HP | DN1 | DN2 | a | b | d | h1 | h2 | f | n1 | n2 | n5 | l1 | l2 | m1 | m2 | s1 | s2 | w | x |
| BN 65-125E/B | 4 | 5,5 | 80 | 65 | 100 | 65 | 24 | 160 | 180 | 360 | 280 | 212 | 110 | 134 | 155 | 125 | 95 | 14 | 14 | 260 | 100 |
| BN 65-125C/B | 5,5 | 7,5 | 80 | 65 | 100 | 65 | 24 | 160 | 180 | 360 | 280 | 212 | 110 | 134 | 155 | 125 | 95 | 14 | 14 | 260 | 100 |
| BN 65-125A/B | 7,5 | 10 | 80 | 65 | 100 | 65 | 24 | 160 | 180 | 360 | 280 | 212 | 110 | 134 | 155 | 125 | 95 | 14 | 14 | 260 | 100 |
| BN 65-160D/B | 7,5 | 10 | 80 | 65 | 100 | 65 | 24 | 160 | 200 | 360 | 280 | 212 | 110 | 150 | 172 | 125 | 95 | 14 | 14 | 260 | 100 |
| BN 65-160C/B | 11 | 15 | 80 | 65 | 100 | 65 | 24 | 160 | 200 | 360 | 280 | 212 | 110 | 150 | 172 | 125 | 95 | 14 | 14 | 260 | 100 |
| BN 65-160B/B | 11 | 15 | 80 | 65 | 100 | 65 | 24 | 160 | 200 | 360 | 280 | 212 | 110 | 150 | 172 | 125 | 95 | 14 | 14 | 260 | 100 |
| BN 65-160A/B | 15 | 20 | 80 | 65 | 100 | 65 | 24 | 160 | 200 | 360 | 280 | 212 | 110 | 150 | 172 | 125 | 95 | 14 | 14 | 260 | 100 |
| BN 65-160AR | 15 | 20 | 80 | 65 | 100 | 65 | 24 | 160 | 200 | 360 | 280 | 212 | 110 | 150 | 172 | 125 | 95 | 14 | 14 | 260 | 100 |
| BN 65-200C/B | 15 | 20 | 80 | 65 | 100 | 65 | 24 | 180 | 225 | 360 | 320 | 250 | 110 | 155 | 175 | 125 | 95 | 14 | 14 | 260 | 140 |
| BN 65-200B/B | 18,5 | 25 | 80 | 65 | 100 | 65 | 24 | 180 | 225 | 360 | 320 | 250 | 110 | 155 | 175 | 125 | 95 | 14 | 14 | 260 | 140 |
| BN 65-200A/B | 22 | 30 | 80 | 65 | 100 | 65 | 24 | 180 | 225 | 360 | 320 | 250 | 110 | 155 | 175 | 125 | 95 | 14 | 14 | 260 | 140 |
| BN 65-250C/B | 22 | 30 | 80 | 65 | 100 | 80 | 24 | 200 | 250 | 470 | 360 | 280 | 110 | 175 | 190 | 160 | 120 | 18 | 14 | 340 | 140 |
| BN 65-250B/B | 30 | 40 | 80 | 65 | 100 | 80 | 24 | 200 | 250 | 470 | 360 | 280 | 110 | 175 | 190 | 160 | 120 | 18 | 14 | 340 | 140 |
| BN 65-250A/B | 37 | 50 | 80 | 65 | 100 | 80 | 24 | 200 | 250 | 470 | 360 | 280 | 110 | 175 | 190 | 160 | 120 | 18 | 14 | 340 | 140 |
| BN 80-160E/B | 7,5 | 10 | 100 | 80 | 125 | 65 | 24 | 180 | 225 | 360 | 320 | 250 | 110 | 165 | 193 | 125 | 95 | 14 | 14 | 260 | 140 |
| BN 80-160D/B | 11 | 15 | 100 | 80 | 125 | 65 | 24 | 180 | 225 | 360 | 320 | 250 | 110 | 165 | 193 | 125 | 95 | 14 | 14 | 260 | 140 |
| BN 80-160C/B | 11 | 15 | 100 | 80 | 125 | 65 | 24 | 180 | 225 | 360 | 320 | 250 | 110 | 165 | 193 | 125 | 95 | 14 | 14 | 260 | 140 |
| BN 80-160B/B | 15 | 20 | 100 | 80 | 125 | 65 | 24 | 180 | 225 | 360 | 320 | 250 | 110 | 165 | 193 | 125 | 95 | 14 | 14 | 260 | 140 |
| BN 80-160A/B | 18,5 | 25 | 100 | 80 | 125 | 65 | 24 | 180 | 225 | 360 | 320 | 250 | 110 | 165 | 193 | 125 | 95 | 14 | 14 | 260 | 140 |
| BN 80-200B/B | 22 | 30 | 100 | 80 | 125 | 65 | 32 | 180 | 250 | 470 | 345 | 280 | 110 | 170 | 194 | 125 | 95 | 14 | 14 | 340 | 140 |
| BN 80-200A/B | 30 | 40 | 100 | 80 | 125 | 65 | 32 | 180 | 250 | 470 | 345 | 280 | 110 | 170 | 194 | 125 | 95 | 14 | 14 | 340 | 140 |
| BN 80-250E/A | 22 | 30 | 100 | 80 | 125 | 80 | 32 | 200 | 280 | 470 | 400 | 315 | 110 | 191 | 210 | 160 | 120 | 18 | 14 | 340 | 140 |
| BN 80-250D/A | 30 | 40 | 100 | 80 | 125 | 80 | 32 | 200 | 280 | 470 | 400 | 315 | 110 | 191 | 210 | 160 | 120 | 18 | 14 | 340 | 140 |
| BN 80-250C/A | 37 | 50 | 100 | 80 | 125 | 80 | 32 | 200 | 280 | 470 | 400 | 315 | 110 | 191 | 210 | 160 | 120 | 18 | 14 | 340 | 140 |
| BN 80-250B/A | 45 | 60 | 100 | 80 | 125 | 80 | 32 | 200 | 280 | 470 | 400 | 315 | 110 | 191 | 210 | 160 | 120 | 18 | 14 | 340 | 140 |
| BN 80-250A/A | 55 | 75 | 100 | 80 | 125 | 80 | 32 | 200 | 280 | 470 | 400 | 315 | 110 | 191 | 210 | 160 | 120 | 18 | 14 | 340 | 140 |
| BN 100-200E/A | 18,5 | 25 | 125 | 100 | 125 | 80 | 32 | 200 | 280 | 470 | 360 | 280 | 110 | 180 | 212 | 160 | 120 | 18 | 14 | 340 | 140 |
| BN 100-200D/A | 22 | 30 | 125 | 100 | 125 | 80 | 32 | 200 | 280 | 470 | 360 | 280 | 110 | 180 | 212 | 160 | 120 | 18 | 14 | 340 | 140 |
| BN 100-200C/A | 30 | 40 | 125 | 100 | 125 | 80 | 32 | 200 | 280 | 470 | 360 | 280 | 110 | 180 | 212 | 160 | 120 | 18 | 14 | 340 | 140 |
| BN 100-200B/A | 37 | 50 | 125 | 100 | 125 | 80 | 32 | 200 | 280 | 470 | 360 | 280 | 110 | 180 | 212 | 160 | 120 | 18 | 14 | 340 | 140 |
| BN 100-200A/A | 45 | 60 | 125 | 100 | 125 | 80 | 32 | 200 | 280 | 470 | 360 | 280 | 110 | 180 | 212 | 160 | 120 | 18 | 14 | 340 | 140 |
| BN 100-250B/A | 55 | 75 | 125 | 100 | 140 | 80 | 32 | 225 | 280 | 470 | 400 | 315 | 110 | 205 | 233 | 160 | 120 | 18 | 14 | 340 | 140 |
| BN 100-250A/A | 75 | 100 | 125 | 100 | 140 | 80 | 32 | 225 | 280 | 470 | 400 | 315 | 110 | 205 | 233 | 160 | 120 | 18 | 14 | 340 | 140 |

## Dimensions and weights

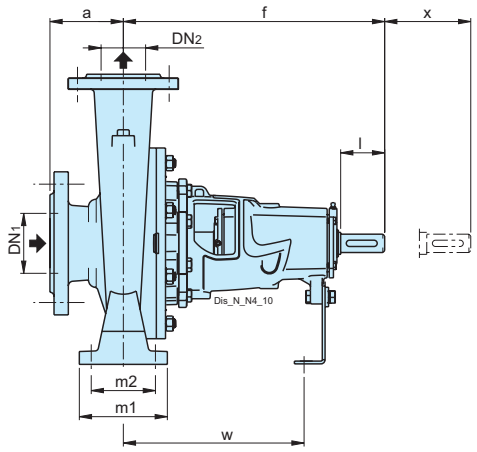


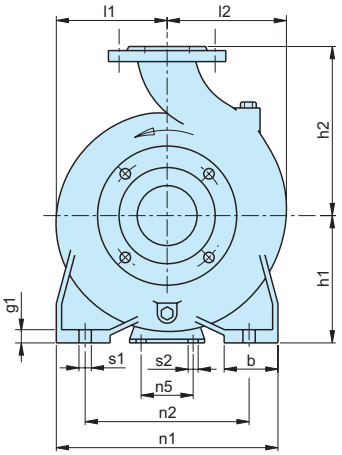


### Shaft extension ISO 775

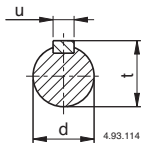


### Parallel key UNI 6604

| mm | | | |
|---|---|---|---|
| d | l | u | t |
| 26 j6 | 50 | 8 | 27 |
| 32 k6 | 80 | 10 | 35 |
| 42 k6 | 110 | 12 | 45 |
| 55 k6 | 110 | 16 | 59 |

| TYPE | Motor | | mm | | | | | | | | | | | | | | | | | | |
|---|---|---|---|---|---|---|---|---|---|---|---|---|---|---|---|---|---|---|---|---|---|
| | kW | HP | DN1 | DN2 | a | b | d | h1 | h2 | f | n1 | n2 | n5 | l1 | l2 | m1 | m2 | s1 | s2 | w | x |
| BN4 32-125F/A | 0,25 | 0,34 | 50 | 32 | 80 | 50 | 24 | 112 | 140 | 360 | 190 | 140 | 110 | 93 | 97 | 100 | 70 | 14 | 14 | 260 | 100 |
| BN4 32-125D/A | 0,25 | 0,34 | 50 | 32 | 80 | 50 | 24 | 112 | 140 | 360 | 190 | 140 | 110 | 93 | 97 | 100 | 70 | 14 | 14 | 260 | 100 |
| BN4 32-125A/A | 0,25 | 0,34 | 50 | 32 | 80 | 50 | 24 | 112 | 140 | 360 | 190 | 140 | 110 | 93 | 97 | 100 | 70 | 14 | 14 | 260 | 100 |
| BN4 32-160B/A | 0,37 | 0,5 | 50 | 32 | 80 | 50 | 24 | 132 | 160 | 360 | 240 | 190 | 110 | 120 | 120 | 100 | 70 | 14 | 14 | 260 | 100 |
| BN4 32-160A/A | 0,37 | 0,5 | 50 | 32 | 80 | 50 | 24 | 132 | 160 | 360 | 240 | 190 | 110 | 120 | 120 | 100 | 70 | 14 | 14 | 260 | 100 |
| BN4 32-200B/A | 0,55 | 0,75 | 50 | 32 | 80 | 50 | 24 | 160 | 180 | 360 | 240 | 190 | 110 | 140 | 140 | 100 | 70 | 14 | 14 | 260 | 100 |
| BN4 32-200A/A | 0,75 | 1 | 50 | 32 | 80 | 50 | 24 | 160 | 180 | 360 | 240 | 190 | 110 | 140 | 140 | 100 | 70 | 14 | 14 | 260 | 100 |
| BN4 40-160C/A | 0,37 | 0,5 | 65 | 40 | 80 | 50 | 24 | 132 | 160 | 360 | 240 | 190 | 110 | 119 | 119 | 100 | 70 | 14 | 14 | 260 | 100 |
| BN4 40-160B/A | 0,55 | 0,75 | 65 | 40 | 80 | 50 | 24 | 132 | 160 | 360 | 240 | 190 | 110 | 119 | 119 | 100 | 70 | 14 | 14 | 260 | 100 |
| BN4 40-160A/A | 0,75 | 1 | 65 | 40 | 80 | 50 | 24 | 132 | 160 | 360 | 240 | 190 | 110 | 119 | 119 | 100 | 70 | 14 | 14 | 260 | 100 |
| BN4 40-200B/A | 1,1 | 1,5 | 65 | 40 | 100 | 50 | 24 | 160 | 180 | 360 | 265 | 212 | 110 | 140 | 140 | 100 | 70 | 14 | 14 | 260 | 100 |
| BN4 40-200A/A | 1,1 | 1,5 | 65 | 40 | 100 | 50 | 24 | 160 | 180 | 360 | 265 | 212 | 110 | 140 | 140 | 100 | 70 | 14 | 14 | 260 | 100 |
| BN4 40-250C/A | 1,5 | 2 | 65 | 40 | 100 | 65 | 24 | 180 | 225 | 360 | 320 | 250 | 110 | 175 | 175 | 125 | 95 | 14 | 14 | 260 | 100 |
| BN4 40-250B/A | 2,2 | 3 | 65 | 40 | 100 | 65 | 24 | 180 | 225 | 360 | 320 | 250 | 110 | 175 | 175 | 125 | 95 | 14 | 14 | 260 | 100 |
| BN4 40-250A/A | 3 | 4 | 65 | 40 | 100 | 65 | 24 | 180 | 225 | 360 | 320 | 250 | 110 | 175 | 175 | 125 | 95 | 14 | 14 | 260 | 100 |
| BN4 50-125F/A | 0,37 | 0,5 | 65 | 50 | 100 | 50 | 24 | 132 | 160 | 360 | 240 | 190 | 110 | 121 | 137 | 100 | 70 | 14 | 14 | 260 | 100 |
| BN4 50-125D/A | 0,55 | 0,75 | 65 | 50 | 100 | 50 | 24 | 132 | 160 | 360 | 240 | 190 | 110 | 121 | 137 | 100 | 70 | 14 | 14 | 260 | 100 |
| BN4 50-125A/A | 0,75 | 1 | 65 | 50 | 100 | 50 | 24 | 132 | 160 | 360 | 240 | 190 | 110 | 121 | 137 | 100 | 70 | 14 | 14 | 260 | 100 |
| BN4 50-125S/A | 0,75 | 1 | 65 | 50 | 100 | 50 | 24 | 132 | 160 | 360 | 240 | 190 | 110 | 121 | 137 | 100 | 70 | 14 | 14 | 260 | 100 |
| BN4 50-160B/A | 1,1 | 1,5 | 65 | 50 | 100 | 50 | 24 | 160 | 180 | 360 | 265 | 212 | 110 | 127 | 141 | 100 | 70 | 14 | 14 | 260 | 100 |
| BN4 50-160A/A | 1,1 | 1,5 | 65 | 50 | 100 | 50 | 24 | 160 | 180 | 360 | 265 | 212 | 110 | 127 | 141 | 100 | 70 | 14 | 14 | 260 | 100 |
| BN4 50-200C/A | 1,1 | 1,5 | 65 | 50 | 100 | 50 | 24 | 160 | 200 | 360 | 265 | 212 | 110 | 140 | 153 | 100 | 70 | 14 | 14 | 260 | 100 |
| BN4 50-200B/A | 1,5 | 2 | 65 | 50 | 100 | 50 | 24 | 160 | 200 | 360 | 265 | 212 | 110 | 140 | 153 | 100 | 70 | 14 | 14 | 260 | 100 |
| BN4 50-200A/A | 2,2 | 3 | 65 | 50 | 100 | 50 | 24 | 160 | 200 | 360 | 265 | 212 | 110 | 140 | 153 | 100 | 70 | 14 | 14 | 260 | 100 |
| BN4 50-250C/A | 2,2 | 3 | 65 | 50 | 100 | 65 | 24 | 180 | 225 | 360 | 320 | 250 | 110 | 175 | 175 | 125 | 95 | 14 | 14 | 260 | 100 |
| BN4 50-250D | 2,2 | 3 | 65 | 50 | 100 | 65 | 24 | 180 | 225 | 360 | 320 | 250 | 110 | 175 | 175 | 125 | 95 | 14 | 14 | 260 | 100 |
| BN4 50-250B/A | 3 | 4 | 65 | 50 | 100 | 65 | 24 | 180 | 225 | 360 | 320 | 250 | 110 | 175 | 175 | 125 | 95 | 14 | 14 | 260 | 100 |
| BN4 50-250A/A | 4 | 5,5 | 65 | 50 | 100 | 65 | 24 | 180 | 225 | 360 | 320 | 250 | 110 | 175 | 175 | 125 | 95 | 14 | 14 | 260 | 100 |
| BN4 65-125E/B | 0,75 | 1 | 80 | 65 | 100 | 65 | 24 | 160 | 180 | 360 | 280 | 212 | 110 | 134 | 155 | 125 | 95 | 14 | 14 | 260 | 100 |
| BN4 65-125C/B | 0,75 | 1 | 80 | 65 | 100 | 65 | 24 | 160 | 180 | 360 | 280 | 212 | 110 | 134 | 155 | 125 | 95 | 14 | 14 | 260 | 100 |
| BN4 65-125A/B | 1,1 | 1,5 | 80 | 65 | 100 | 65 | 24 | 160 | 180 | 360 | 280 | 212 | 110 | 134 | 155 | 125 | 95 | 14 | 14 | 260 | 100 |
| BN4 65-160C/B | 1,1 | 1,5 | 80 | 65 | 100 | 65 | 24 | 160 | 200 | 360 | 280 | 212 | 110 | 150 | 172 | 125 | 95 | 14 | 14 | 260 | 100 |
| BN4 65-160B/B | 1,1 | 1,5 | 80 | 65 | 100 | 65 | 24 | 160 | 200 | 360 | 280 | 212 | 110 | 150 | 172 | 125 | 95 | 14 | 14 | 260 | 100 |
| BN4 65-160A/B | 1,5 | 2 | 80 | 65 | 100 | 65 | 24 | 160 | 200 | 360 | 280 | 212 | 110 | 150 | 172 | 125 | 95 | 14 | 14 | 260 | 100 |
| BN4 65-160S | 2,2 | 3 | 80 | 65 | 100 | 65 | 24 | 160 | 200 | 360 | 280 | 212 | 110 | 150 | 172 | 125 | 95 | 14 | 14 | 260 | 100 |
| BN4 65-200B/B | 2,2 | 3 | 80 | 65 | 100 | 65 | 24 | 180 | 225 | 360 | 320 | 250 | 110 | 155 | 175 | 125 | 95 | 14 | 14 | 260 | 140 |
| BN4 65-200A/B | 3 | 4 | 80 | 65 | 100 | 65 | 24 | 180 | 225 | 360 | 320 | 250 | 110 | 155 | 175 | 125 | 95 | 14 | 14 | 260 | 140 |
| BN4 65-250B/B | 4 | 5,5 | 80 | 65 | 100 | 80 | 24 | 200 | 250 | 470 | 360 | 280 | 110 | 175 | 190 | 160 | 120 | 18 | 14 | 340 | 140 |
| BN4 65-250A/B | 5,5 | 7,5 | 80 | 65 | 100 | 80 | 24 | 200 | 250 | 470 | 360 | 280 | 110 | 175 | 190 | 160 | 120 | 18 | 14 | 340 | 140 |
| BN4 65-315C/A | 5,5 | 7,5 | 80 | 65 | 125 | 80 | 32 | 225 | 280 | 470 | 400 | 315 | 110 | 220 | 220 | 160 | 120 | 18 | 14 | 340 | 140 |
| BN4 65-315B/A | 7,5 | 10 | 80 | 65 | 125 | 80 | 32 | 225 | 280 | 470 | 400 | 315 | 110 | 220 | 220 | 160 | 120 | 18 | 14 | 340 | 140 |
| BN4 65-315A/A | 11 | 15 | 80 | 65 | 125 | 80 | 32 | 225 | 280 | 470 | 400 | 315 | 110 | 220 | 220 | 160 | 120 | 18 | 14 | 340 | 140 |

## Dimensions and weights

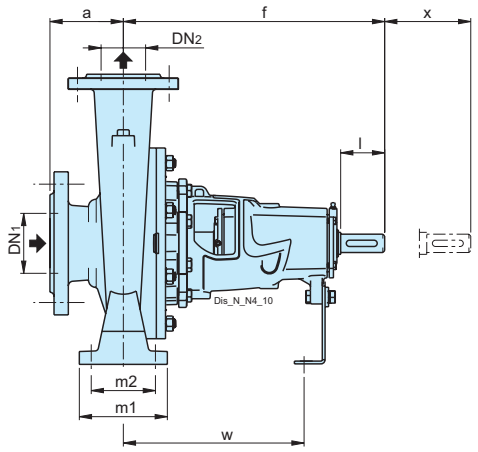


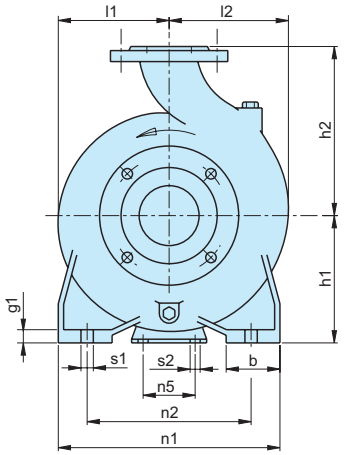


### Shaft extension ISO 775

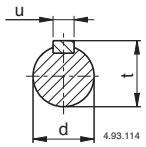


### Parallel key UNI 6604

| mm | | | |
|---|---|---|---|
| d | l | u | t |
| 26 j6 | 50 | 8 | 27 |
| 32 k6 | 80 | 10 | 35 |
| 42 k6 | 110 | 12 | 45 |
| 55 k6 | 110 | 16 | 59 |

| TYPE | Motor | | mm | | | | | | | | | | | | | | | | | | |
|---|---|---|---|---|---|---|---|---|---|---|---|---|---|---|---|---|---|---|---|---|---|
| | kW | HP | DN1 | DN2 | a | b | d | h1 | h2 | f | n1 | n2 | n5 | l1 | l2 | m1 | m2 | s1 | s2 | w | x |
| BN4 80-160C/B | 1,1 | 1,5 | 100 | 80 | 125 | 65 | 24 | 180 | 225 | 360 | 320 | 250 | 110 | 165 | 193 | 125 | 95 | 14 | 14 | 260 | 140 |
| BN4 80-160B/B | 1,5 | 2 | 100 | 80 | 125 | 65 | 24 | 180 | 225 | 360 | 320 | 250 | 110 | 165 | 193 | 125 | 95 | 14 | 14 | 260 | 140 |
| BN4 80-160A/B | 2,2 | 3 | 100 | 80 | 125 | 65 | 24 | 180 | 225 | 360 | 320 | 250 | 110 | 165 | 193 | 125 | 95 | 14 | 14 | 260 | 140 |
| BN4 80-200C/B | 2,2 | 3 | 100 | 80 | 125 | 65 | 32 | 180 | 250 | 470 | 345 | 280 | 110 | 170 | 194 | 125 | 95 | 14 | 14 | 340 | 140 |
| BN4 80-200B/B | 3 | 4 | 100 | 80 | 125 | 65 | 32 | 180 | 250 | 470 | 345 | 280 | 110 | 170 | 194 | 125 | 95 | 14 | 14 | 340 | 140 |
| BN4 80-200A/B | 4 | 5,5 | 100 | 80 | 125 | 65 | 32 | 180 | 250 | 470 | 345 | 280 | 110 | 170 | 194 | 125 | 95 | 14 | 14 | 340 | 140 |
| BN4 80-250C/A | 4 | 5,5 | 100 | 80 | 125 | 80 | 32 | 200 | 280 | 470 | 400 | 315 | 110 | 191 | 210 | 160 | 120 | 18 | 14 | 340 | 140 |
| BN4 80-250B/A | 5,5 | 7,5 | 100 | 80 | 125 | 80 | 32 | 200 | 280 | 470 | 400 | 315 | 110 | 191 | 210 | 160 | 120 | 18 | 14 | 340 | 140 |
| BN4 80-250A/A | 7,5 | 10 | 100 | 80 | 125 | 80 | 32 | 200 | 280 | 470 | 400 | 315 | 110 | 191 | 210 | 160 | 120 | 18 | 14 | 340 | 140 |
| BN4 80-315C/B | 11 | 15 | 100 | 80 | 125 | 80 | 32 | 250 | 315 | 470 | 400 | 315 | 110 | 220 | 232 | 160 | 120 | 18 | 14 | 340 | 140 |
| BN4 80-315B/B | 11 | 15 | 100 | 80 | 125 | 80 | 32 | 250 | 315 | 470 | 400 | 315 | 110 | 220 | 232 | 160 | 120 | 18 | 14 | 340 | 140 |
| BN4 80-315A/B | 15 | 20 | 100 | 80 | 125 | 80 | 32 | 250 | 315 | 470 | 400 | 315 | 110 | 220 | 232 | 160 | 120 | 18 | 14 | 340 | 140 |
| BN4 80-315S | 18,5 | 25 | 100 | 80 | 125 | 80 | 32 | 250 | 315 | 470 | 400 | 315 | 110 | 220 | 232 | 160 | 120 | 18 | 14 | 340 | 140 |
| BN4 80-400C/B | 18,5 | 25 | 125 | 80 | 125 | 80 | 42 | 280 | 355 | 530 | 435 | 355 | 110 | 268 | 268 | 160 | 120 | 18 | 14 | 370 | 140 |
| BN4 80-400B/B | 22 | 30 | 125 | 80 | 125 | 80 | 42 | 280 | 355 | 530 | 435 | 355 | 110 | 268 | 268 | 160 | 120 | 18 | 14 | 370 | 140 |
| BN4 80-400A/B | 30 | 40 | 125 | 80 | 125 | 80 | 42 | 280 | 355 | 530 | 435 | 355 | 110 | 268 | 268 | 160 | 120 | 18 | 14 | 370 | 140 |
| BN4 80-400S | 37 | 50 | 125 | 80 | 125 | 80 | 42 | 280 | 355 | 530 | 435 | 355 | 110 | 268 | 268 | 160 | 120 | 18 | 14 | 370 | 140 |
| BN4 100-200C/A | 3 | 4 | 125 | 100 | 125 | 80 | 32 | 200 | 280 | 470 | 360 | 280 | 110 | 180 | 212 | 160 | 120 | 18 | 14 | 340 | 140 |
| BN4 100-200B/A | 4 | 5,5 | 125 | 100 | 125 | 80 | 32 | 200 | 280 | 470 | 360 | 280 | 110 | 180 | 212 | 160 | 120 | 18 | 14 | 340 | 140 |
| BN4 100-200A/A | 5,5 | 7,5 | 125 | 100 | 125 | 80 | 32 | 200 | 280 | 470 | 360 | 280 | 110 | 180 | 212 | 160 | 120 | 18 | 14 | 340 | 140 |
| BN4 100-250B/A | 7,5 | 10 | 125 | 100 | 140 | 80 | 32 | 225 | 280 | 470 | 400 | 315 | 110 | 205 | 233 | 160 | 120 | 18 | 14 | 340 | 140 |
| BN4 100-250A/A | 11 | 15 | 125 | 100 | 140 | 80 | 32 | 225 | 280 | 470 | 400 | 315 | 110 | 205 | 233 | 160 | 120 | 18 | 14 | 340 | 140 |
| BN4 100-315C/A | 11 | 15 | 125 | 100 | 140 | 80 | 32 | 250 | 315 | 470 | 400 | 315 | 110 | 230 | 250 | 160 | 120 | 18 | 14 | 340 | 140 |
| BN4 100-315B/A | 15 | 20 | 125 | 100 | 140 | 80 | 32 | 250 | 315 | 470 | 400 | 315 | 110 | 230 | 250 | 160 | 120 | 18 | 14 | 340 | 140 |
| BN4 100-315A/A | 18,5 | 25 | 125 | 100 | 140 | 80 | 32 | 250 | 315 | 470 | 400 | 315 | 110 | 230 | 250 | 160 | 120 | 18 | 14 | 340 | 140 |
| BN4 100-400C/A | 22 | 30 | 125 | 100 | 140 | 100 | 42 | 280 | 355 | 530 | 500 | 400 | 110 | 268 | 280 | 200 | 150 | 22 | 14 | 370 | 140 |
| BN4 100-400B/A | 30 | 40 | 125 | 100 | 140 | 100 | 42 | 280 | 355 | 530 | 500 | 400 | 110 | 268 | 280 | 200 | 150 | 22 | 14 | 370 | 140 |
| BN4 100-400A/A | 37 | 50 | 125 | 100 | 140 | 100 | 42 | 280 | 355 | 530 | 500 | 400 | 110 | 268 | 280 | 200 | 150 | 22 | 14 | 370 | 140 |
| BN4 125-250E/A | 5,5 | 7,5 | 150 | 125 | 140 | 80 | 32 | 250 | 355 | 470 | 400 | 315 | 110 | 235 | 268 | 160 | 120 | 18 | 14 | 340 | 140 |
| BN4 125-250D/A | 7,5 | 10 | 150 | 125 | 140 | 80 | 32 | 250 | 355 | 470 | 400 | 315 | 110 | 235 | 268 | 160 | 120 | 18 | 14 | 340 | 140 |
| BN4 125-250C/A | 11 | 15 | 150 | 125 | 140 | 80 | 32 | 250 | 355 | 470 | 400 | 315 | 110 | 235 | 268 | 160 | 120 | 18 | 14 | 340 | 140 |
| BN4 125-250B/A | 11 | 15 | 150 | 125 | 140 | 80 | 32 | 250 | 355 | 470 | 400 | 315 | 110 | 235 | 268 | 160 | 120 | 18 | 14 | 340 | 140 |
| BN4 125-250A/A | 15 | 20 | 150 | 125 | 140 | 80 | 32 | 250 | 355 | 470 | 400 | 315 | 110 | 235 | 268 | 160 | 120 | 18 | 14 | 340 | 140 |
| BN4 125-315C/A | 18,5 | 25 | 150 | 125 | 140 | 100 | 42 | 280 | 355 | 530 | 500 | 400 | 110 | 247 | 278 | 200 | 150 | 22 | 14 | 370 | 140 |
| BN4 125-315B/A | 22 | 30 | 150 | 125 | 140 | 100 | 42 | 280 | 355 | 530 | 500 | 400 | 110 | 247 | 278 | 200 | 150 | 22 | 14 | 370 | 140 |
| BN4 125-315A/A | 30 | 40 | 150 | 125 | 140 | 100 | 42 | 280 | 355 | 530 | 500 | 400 | 110 | 247 | 278 | 200 | 150 | 22 | 14 | 370 | 140 |
| BN4 125-400C/A | 37 | 50 | 150 | 125 | 140 | 100 | 42 | 315 | 400 | 530 | 500 | 400 | 110 | 280 | 305 | 200 | 150 | 22 | 14 | 370 | 140 |
| BN4 125-400B/A | 45 | 60 | 150 | 125 | 140 | 100 | 42 | 315 | 400 | 530 | 500 | 400 | 110 | 280 | 305 | 200 | 150 | 22 | 14 | 370 | 140 |
| BN4 125-400A/A | 55 | 75 | 150 | 125 | 140 | 100 | 42 | 315 | 400 | 530 | 500 | 400 | 110 | 280 | 305 | 200 | 150 | 22 | 14 | 370 | 140 |
| BN4 150-315D/B | 18,5 | 25 | 200 | 150 | 160 | 100 | 42 | 280 | 400 | 530 | 550 | 450 | 110 | 260 | 298 | 200 | 150 | 22 | 14 | 370 | 140 |
| BN4 150-315C/B | 22 | 30 | 200 | 150 | 160 | 100 | 42 | 280 | 400 | 530 | 550 | 450 | 110 | 260 | 298 | 200 | 150 | 22 | 14 | 370 | 140 |
| BN4 150-315B/B | 30 | 40 | 200 | 150 | 160 | 100 | 42 | 280 | 400 | 530 | 550 | 450 | 110 | 260 | 298 | 200 | 150 | 22 | 14 | 370 | 140 |
| BN4 150-315A/B | 37 | 50 | 200 | 150 | 160 | 100 | 42 | 280 | 400 | 530 | 550 | 450 | 110 | 260 | 298 | 200 | 150 | 22 | 14 | 370 | 140 |
| BN4 150-315S | 45 | 60 | 200 | 150 | 160 | 100 | 42 | 280 | 400 | 530 | 550 | 450 | 110 | 260 | 298 | 200 | 150 | 22 | 14 | 370 | 140 |
| BN4 150-400B/B | 55 | 75 | 200 | 150 | 160 | 100 | 42 | 315 | 450 | 530 | 550 | 450 | 110 | 295 | 328 | 200 | 150 | 22 | 14 | 370 | 140 |
| BN4 150-400A/B | 75 | 100 | 200 | 150 | 160 | 100 | 42 | 315 | 450 | 530 | 550 | 450 | 110 | 295 | 328 | 200 | 150 | 22 | 14 | 370 | 140 |
| BN4 150-400S | 90 | 120 | 200 | 150 | 160 | 100 | 42 | 315 | 450 | 530 | 550 | 450 | 110 | 295 | 328 | 200 | 150 | 22 | 14 | 370 | 140 |

N

calpeda

## Dimensions and weights

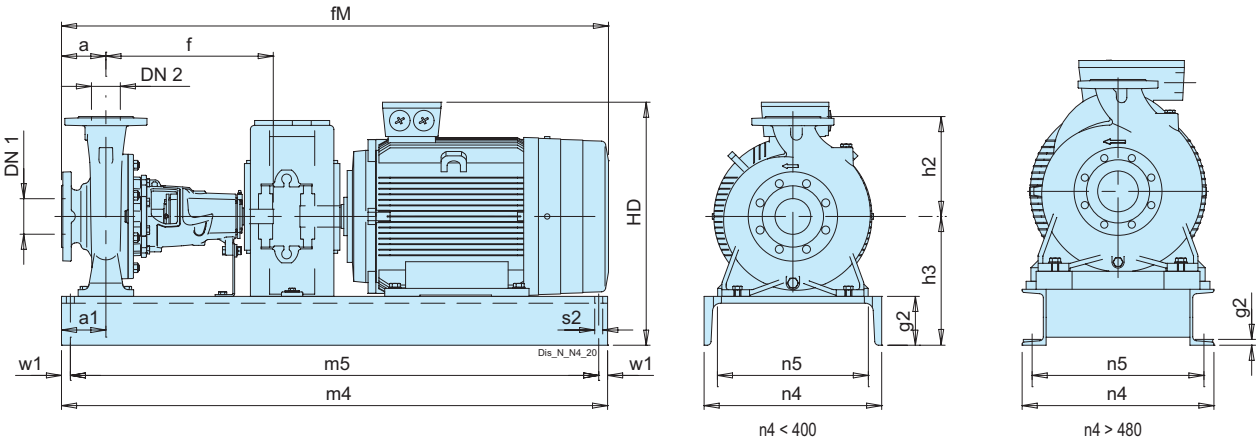


| TYPE | Motor | mm | | | | | | | | | | | | | | | | Kg |
|---|---|---|---|---|---|---|---|---|---|---|---|---|---|---|---|---|---|---|
| | kW | DN1 | DN2 | a | a1 | f | fM | g2 | h2 | h3 | HD | m4 | m5 | n4 | n5 | s1 | w1 | Weight |
| N 32-125F/A G | 0,55 | 50 | 32 | 80 | 90 | 360 | 718 | 85 | 140 | 197 | 308 | 780 | 750 | 240 | 180 | 14 | 15 | - |
| N 32-125D/A G | 0,75 | 50 | 32 | 80 | 90 | 360 | 770 | 85 | 140 | 197 | 319 | 780 | 750 | 240 | 180 | 14 | 15 | - |
| N 32-125D-S/A G | 1,1 | 50 | 32 | 80 | 90 | 360 | 770 | 85 | 140 | 197 | 319 | 780 | 750 | 240 | 180 | 14 | 15 | - |
| N 32-125A/A G | 1,1 | 50 | 32 | 80 | 90 | 360 | 770 | 85 | 140 | 197 | 319 | 780 | 750 | 240 | 180 | 14 | 15 | - |
| N 32-125A-S/A G | 1,5 | 50 | 32 | 80 | 90 | 360 | 825 | 85 | 140 | 197 | 323 | 780 | 750 | 240 | 180 | 14 | 15 | - |
| N 32-125S/A G | 1,5 | 50 | 32 | 80 | 90 | 360 | 825 | 85 | 140 | 197 | 323 | 780 | 750 | 240 | 180 | 14 | 15 | - |
| N 32-160B/A G | 1,5 | 50 | 32 | 80 | 90 | 360 | 825 | 85 | 160 | 217 | 343 | 780 | 750 | 240 | 180 | 14 | 15 | - |
| N 32-160B-S/A G | 2,2 | 50 | 32 | 80 | 90 | 360 | 865 | 85 | 160 | 217 | 343 | 780 | 750 | 240 | 180 | 14 | 15 | - |
| N 32-160A/A G | 2,2 | 50 | 32 | 80 | 90 | 360 | 865 | 85 | 160 | 217 | 343 | 780 | 750 | 240 | 180 | 14 | 15 | 325 |
| N 32-160A-S/A G | 3 | 50 | 32 | 80 | 90 | 360 | 920 | 100 | 160 | 232 | 398 | 880 | 850 | 300 | 240 | 14 | 15 | - |
| N 32-200D/A G | 2,2 | 50 | 32 | 80 | 90 | 360 | 865 | 85 | 180 | 245 | 371 | 780 | 750 | 240 | 180 | 14 | 15 | - |
| N 32-200D-S/A G | 3 | 50 | 32 | 80 | 90 | 360 | 920 | 100 | 180 | 260 | 426 | 880 | 850 | 300 | 240 | 14 | 15 | - |
| N 32-200C/A G | 3 | 50 | 32 | 80 | 90 | 360 | 920 | 100 | 180 | 260 | 426 | 880 | 850 | 300 | 240 | 14 | 15 | - |
| N 32-200A/A G | 4 | 50 | 32 | 80 | 90 | 360 | 903 | 100 | 180 | 260 | 437 | 880 | 850 | 300 | 240 | 14 | 15 | - |
| N 32-200A-S/A G | 5,5 | 50 | 32 | 80 | 100 | 360 | 954 | 100 | 180 | 260 | 462 | 1020 | 990 | 350 | 290 | 14 | 15 | - |
| N 32L-160C G | 2,2 | 50 | 32 | 80 | 90 | 360 | 865 | 85 | 160 | 217 | 343 | 780 | 750 | 240 | 180 | 14 | 15 | - |
| N 32L-160B G | 3 | 50 | 32 | 80 | 90 | 360 | 920 | 100 | 160 | 232 | 398 | 880 | 850 | 300 | 240 | 14 | 15 | - |
| N 32L-160A G | 4 | 50 | 32 | 80 | 90 | 360 | 903 | 100 | 160 | 232 | 409 | 880 | 850 | 300 | 240 | 14 | 15 | 110 |
| N 32L-200C G | 4 | 50 | 32 | 80 | 90 | 360 | 903 | 100 | 180 | 260 | 437 | 880 | 850 | 300 | 240 | 14 | 15 | - |
| N 32L-200B G | 5,5 | 50 | 32 | 80 | 90 | 360 | 953 | 100 | 180 | 260 | 462 | 1020 | 990 | 350 | 290 | 14 | 15 | - |
| N 32L-200A G | 7,5 | 50 | 32 | 80 | 90 | 360 | 953 | 100 | 180 | 260 | 462 | 1020 | 990 | 350 | 290 | 14 | 15 | - |
| N 40-125F/A G | 1,1 | 65 | 40 | 80 | 90 | 360 | 770 | 85 | 140 | 197 | 319 | 780 | 750 | 240 | 180 | 14 | 15 | - |
| N 40-125C/A G | 1,5 | 65 | 40 | 80 | 90 | 360 | 825 | 85 | 140 | 197 | 323 | 780 | 750 | 240 | 180 | 14 | 15 | - |
| N 40-125A/A G | 2,2 | 65 | 40 | 80 | 90 | 360 | 865 | 85 | 140 | 197 | 323 | 780 | 750 | 240 | 180 | 14 | 15 | - |
| N 40-160C/A G | 2,2 | 65 | 40 | 80 | 90 | 360 | 865 | 85 | 160 | 217 | 343 | 780 | 750 | 240 | 180 | 14 | 15 | - |
| N 40-160B/A G | 3 | 65 | 40 | 80 | 90 | 360 | 920 | 100 | 160 | 232 | 398 | 880 | 850 | 300 | 240 | 14 | 15 | - |
| N 40-160A/A G | 4 | 65 | 40 | 80 | 90 | 360 | 903 | 100 | 160 | 232 | 409 | 880 | 850 | 300 | 240 | 14 | 15 | - |
| N 40-160A-S/A G | 5,5 | 65 | 40 | 80 | 90 | 360 | 953 | 100 | 160 | 260 | 434 | 1020 | 990 | 350 | 290 | 14 | 15 | - |
| N 40-200D/A G | 4 | 65 | 40 | 100 | 100 | 360 | 923 | 100 | 180 | 260 | 437 | 880 | 850 | 300 | 240 | 14 | 15 | - |
| N 40-200D-S/A G | 5,5 | 65 | 40 | 100 | 100 | 360 | 973 | 100 | 180 | 260 | 462 | 1020 | 990 | 350 | 290 | 14 | 15 | - |
| N 40-200C/A G | 4 | 65 | 40 | 100 | 100 | 360 | 923 | 100 | 180 | 260 | 437 | 880 | 850 | 300 | 240 | 14 | 15 | - |
| N 40-200C-S/A G | 5,5 | 65 | 40 | 100 | 100 | 360 | 973 | 100 | 180 | 260 | 462 | 1020 | 990 | 350 | 290 | 14 | 15 | - |
| N 40-200B/A G | 5,5 | 65 | 40 | 100 | 100 | 360 | 973 | 100 | 180 | 260 | 462 | 1020 | 990 | 350 | 290 | 14 | 15 | - |
| N 40-200B-S/A G | 7,5 | 65 | 40 | 100 | 100 | 360 | 973 | 100 | 180 | 260 | 462 | 1020 | 990 | 350 | 290 | 14 | 15 | - |
| N 40-200AR/A G | 5,5 | 65 | 40 | 100 | 100 | 360 | 973 | 100 | 180 | 260 | 462 | 1020 | 990 | 350 | 290 | 14 | 15 | - |
| N 40-200AR-S/A G | 7,5 | 65 | 40 | 100 | 100 | 360 | 973 | 100 | 180 | 260 | 462 | 1020 | 990 | 350 | 290 | 14 | 15 | - |
| N 40-200A/A G | 7,5 | 65 | 40 | 100 | 100 | 360 | 973 | 100 | 180 | 260 | 462 | 1020 | 990 | 350 | 290 | 14 | 15 | - |
| N 40-250C/A G | 11 | 65 | 40 | 100 | 100 | 360 | 1082 | 100 | 225 | 280 | 517 | 1020 | 990 | 350 | 290 | 14 | 15 | - |
| N 40-250B/A G | 11 | 65 | 40 | 100 | 100 | 360 | 1082 | 100 | 225 | 280 | 517 | 1020 | 990 | 350 | 290 | 14 | 15 | - |
| N 40-250A/A G | 15 | 65 | 40 | 100 | 100 | 360 | 1082 | 100 | 225 | 280 | 517 | 1020 | 990 | 350 | 290 | 14 | 15 | - |
| N 50-125F/A G | 2,2 | 65 | 50 | 100 | 90 | 360 | 885 | 85 | 160 | 217 | 343 | 780 | 750 | 240 | 180 | 14 | 15 | - |
| N 50-125D/A G | 3 | 65 | 50 | 100 | 90 | 360 | 940 | 100 | 160 | 232 | 398 | 880 | 850 | 300 | 240 | 14 | 15 | - |
| N 50-125A/A G | 4 | 65 | 50 | 100 | 90 | 360 | 923 | 100 | 160 | 232 | 409 | 880 | 850 | 300 | 240 | 14 | 15 | - |
| N 50-125S/A G | 4 | 65 | 50 | 100 | 90 | 360 | 923 | 100 | 160 | 232 | 409 | 880 | 850 | 300 | 240 | 14 | 15 | - |
| N 50-125S-S/A G | 5,5 | 65 | 50 | 100 | 90 | 360 | 973 | 100 | 160 | 232 | 434 | 1020 | 990 | 350 | 290 | 14 | 15 | - |
| N 50-160B/A G | 5,5 | 65 | 50 | 100 | 100 | 360 | 973 | 100 | 180 | 260 | 462 | 1020 | 990 | 350 | 290 | 14 | 15 | - |
| N 50-160A/A G | 7,5 | 65 | 50 | 100 | 100 | 360 | 973 | 100 | 180 | 260 | 462 | 1020 | 990 | 350 | 290 | 14 | 15 | - |
| N 50-200B/A G | 11 | 65 | 50 | 100 | 100 | 360 | 1082 | 100 | 200 | 260 | 497 | 1020 | 990 | 350 | 290 | 14 | 15 | - |
| N 50-200A/A G | 11 | 65 | 50 | 100 | 100 | 360 | 1082 | 100 | 200 | 260 | 497 | 1020 | 990 | 350 | 290 | 14 | 15 | 214 |
| N 50-200S/A G | 15 | 65 | 50 | 100 | 100 | 360 | 1082 | 100 | 200 | 260 | 497 | 1020 | 990 | 350 | 290 | 14 | 15 | - |
| N 50-250C/A G | 11 | 65 | 50 | 100 | 100 | 360 | 1082 | 100 | 225 | 280 | 517 | 1020 | 990 | 350 | 290 | 14 | 15 | - |
| N 50-250B/A G | 15 | 65 | 50 | 100 | 100 | 360 | 1082 | 100 | 225 | 280 | 517 | 1020 | 990 | 350 | 290 | 14 | 15 | - |
| N 50-250A/A G | 18,5 | 65 | 50 | 100 | 100 | 360 | 1142 | 100 | 225 | 280 | 517 | 1020 | 990 | 350 | 290 | 14 | 15 | - |
| N 50-250S/A G | 22 | 65 | 50 | 100 | 100 | 360 | 1218 | 100 | 225 | 280 | 566 | 1140 | 1110 | 350 | 290 | 14 | 15 | - |

N

## Dimensions and weights

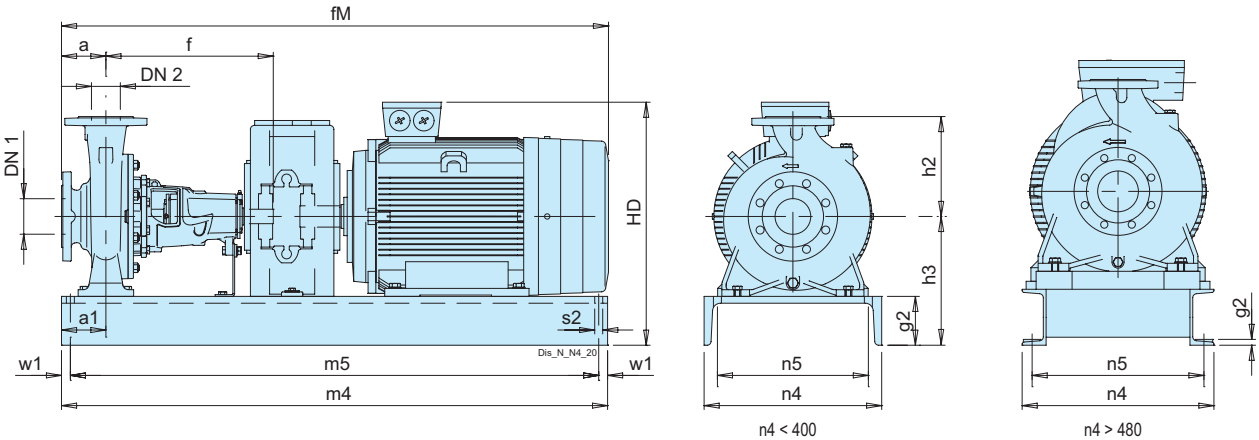


| TYPE | Motor | mm | | | | | | | | | | | | | | | | Kg |
|---|---|---|---|---|---|---|---|---|---|---|---|---|---|---|---|---|---|---|
| | kW | DN1 | DN2 | a | a1 | f | fM | g2 | h2 | h3 | HD | m4 | m5 | n4 | n5 | s1 | w1 | Weight |
| N 65-125E/B G | 4 | 80 | 65 | 100 | 100 | 360 | 923 | 100 | 180 | 260 | 437 | 880 | 850 | 300 | 240 | 14 | 15 | - |
| N 65-125C/B G | 5,5 | 80 | 65 | 100 | 100 | 360 | 973 | 100 | 180 | 260 | 462 | 1020 | 990 | 350 | 290 | 14 | 15 | - |
| N 65-125A/B G | 7,5 | 80 | 65 | 100 | 100 | 360 | 973 | 100 | 180 | 260 | 462 | 1020 | 990 | 350 | 290 | 14 | 15 | - |
| N 65-160D/B G | 7,5 | 80 | 65 | 100 | 100 | 360 | 973 | 100 | 200 | 260 | 462 | 1020 | 990 | 350 | 290 | 14 | 15 | - |
| N 65-160C/B G | 11 | 80 | 65 | 100 | 100 | 360 | 1112 | 100 | 200 | 260 | 497 | 1020 | 990 | 350 | 290 | 14 | 15 | - |
| N 65-160B/B G | 11 | 80 | 65 | 100 | 100 | 360 | 1112 | 100 | 200 | 260 | 497 | 1020 | 990 | 350 | 290 | 14 | 15 | - |
| N 65-160A/B G | 15 | 80 | 65 | 100 | 100 | 360 | 1082 | 100 | 200 | 260 | 497 | 1020 | 990 | 350 | 290 | 14 | 15 | 220 |
| N 65-160AR G | 15 | 80 | 65 | 100 | 100 | 360 | 1082 | 100 | 200 | 260 | 497 | 1020 | 990 | 350 | 290 | 14 | 15 | - |
| N 65-200C/B G | 15 | 80 | 65 | 100 | 100 | 360 | 1082 | 100 | 225 | 280 | 517 | 1020 | 990 | 350 | 290 | 14 | 15 | - |
| N 65-200B/B G | 18,5 | 80 | 65 | 100 | 100 | 360 | 1142 | 100 | 225 | 280 | 517 | 1020 | 990 | 350 | 290 | 14 | 15 | - |
| N 65-200A/B G | 22 | 80 | 65 | 100 | 100 | 360 | 1218 | 100 | 225 | 280 | 566 | 1140 | 1110 | 350 | 290 | 14 | 15 | - |
| N 65-250C/B G | 22 | 80 | 65 | 100 | 130 | 470 | 1328 | 110 | 250 | 310 | 596 | 1360 | 1320 | 400 | 340 | 18 | 20 | - |
| N 65-250B/B G | 30 | 80 | 65 | 100 | 130 | 470 | 1348 | 110 | 250 | 310 | 625 | 1360 | 1320 | 400 | 340 | 18 | 20 | - |
| N 65-250A/B G | 37 | 80 | 65 | 100 | 130 | 470 | 1348 | 110 | 250 | 310 | 625 | 1360 | 1320 | 400 | 340 | 18 | 20 | - |
| N 80-160E/B G | 7,5 | 100 | 80 | 125 | 100 | 360 | 998 | 100 | 225 | 280 | 482 | 1020 | 990 | 350 | 290 | 14 | 15 | - |
| N 80-160D/B G | 11 | 100 | 80 | 125 | 100 | 360 | 1107 | 100 | 225 | 280 | 517 | 1020 | 990 | 350 | 290 | 14 | 15 | - |
| N 80-160C/B G | 11 | 100 | 80 | 125 | 100 | 360 | 1107 | 100 | 225 | 280 | 517 | 1020 | 990 | 350 | 290 | 14 | 15 | - |
| N 80-160B/B G | 15 | 100 | 80 | 125 | 100 | 360 | 1107 | 100 | 225 | 280 | 517 | 1020 | 990 | 350 | 290 | 14 | 15 | - |
| N 80-160A/B G | 18,5 | 100 | 80 | 125 | 100 | 360 | 1167 | 100 | 225 | 280 | 517 | 1020 | 990 | 350 | 290 | 14 | 15 | - |
| N 80-200B/B G | 22 | 100 | 80 | 125 | 100 | 470 | 1353 | 110 | 250 | 290 | 576 | 1230 | 1190 | 400 | 340 | 18 | 20 | - |
| N 80-200A/B G | 30 | 100 | 80 | 125 | 130 | 470 | 1373 | 110 | 250 | 310 | 625 | 1360 | 1320 | 400 | 340 | 18 | 20 | - |
| N 80-250E/A G | 22 | 100 | 80 | 125 | 130 | 470 | 1353 | 110 | 280 | 310 | 596 | 1360 | 1320 | 400 | 340 | 18 | 20 | - |
| N 80-250D/A G | 30 | 100 | 80 | 125 | 130 | 470 | 1373 | 110 | 280 | 310 | 625 | 1360 | 1320 | 400 | 340 | 18 | 20 | - |
| N 80-250C/A G | 37 | 100 | 80 | 125 | 130 | 470 | 1373 | 110 | 280 | 310 | 625 | 1360 | 1320 | 400 | 340 | 18 | 20 | - |
| N 80-250B/A G | 45 | 100 | 80 | 125 | 95 | 470 | 1470 | 16 | 280 | 385 | 723 | 1250 | 840 | 480 | 430 | 24 | 205 | - |
| N 80-250A/A G | 55 | 100 | 80 | 125 | 95 | 470 | 1509 | 16 | 280 | 415 | 825 | 1250 | 840 | 480 | 430 | 24 | 205 | - |
| N 100-200E/A G | 18,5 | 125 | 100 | 125 | 130 | 470 | 1263 | 110 | 280 | 310 | 547 | 1230 | 1190 | 400 | 340 | 18 | 20 | - |
| N 100-200D/A G | 22 | 125 | 100 | 125 | 130 | 470 | 1353 | 110 | 280 | 310 | 596 | 1360 | 1320 | 400 | 340 | 18 | 20 | - |
| N 100-200C/A G | 30 | 125 | 100 | 125 | 130 | 470 | 1373 | 110 | 280 | 310 | 625 | 1360 | 1320 | 400 | 340 | 18 | 20 | - |
| N 100-200B/A G | 37 | 125 | 100 | 125 | 130 | 470 | 1373 | 110 | 280 | 310 | 625 | 1360 | 1320 | 400 | 340 | 18 | 20 | - |
| N 100-200A/A G | 45 | 125 | 100 | 125 | 95 | 470 | 1470 | 16 | 280 | 385 | 723 | 1250 | 840 | 480 | 430 | 24 | 205 | - |
| N 100-250B/A G | 55 | 125 | 100 | 140 | 95 | 470 | 1524 | 16 | 280 | 415 | 825 | 1250 | 840 | 480 | 430 | 24 | 205 | - |
| N 100-250A/A G | 75 | 125 | 100 | 140 | 95 | 470 | 1597 | 17.5 | 280 | 505 | 938 | 1400 | 940 | 510 | 450 | 24 | 230 | - |

N

## Dimensions and weights

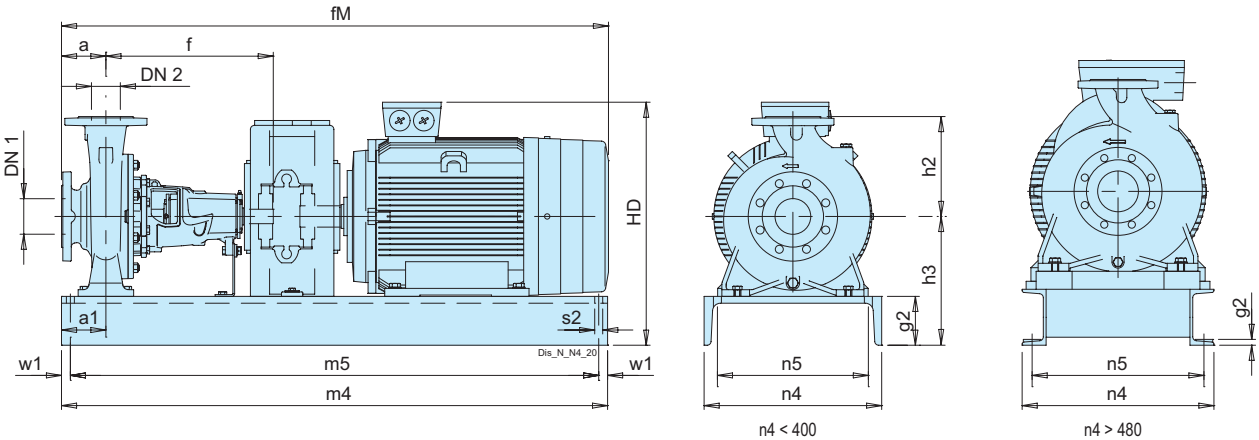


| TYPE | Motor | mm | | | | | | | | | | | | | | | |
|---|---|---|---|---|---|---|---|---|---|---|---|---|---|---|---|---|---|
| | kW | DN1 | DN2 | a | a1 | f | fM | g2 | h2 | h3 | HD | m4 | m5 | n4 | n5 | s1 | w1 |
| N4 32-125F/A G | 0,25 | 50 | 32 | 80 | 90 | 360 | 718 | 85 | 140 | 197 | 308 | 780 | 750 | 240 | 180 | 14 | 15 |
| N4 32-125D/A G | 0,25 | 50 | 32 | 80 | 90 | 360 | 718 | 85 | 140 | 197 | 308 | 780 | 750 | 240 | 180 | 14 | 15 |
| N4 32-125A/A G | 0,25 | 50 | 32 | 80 | 90 | 360 | 718 | 85 | 140 | 197 | 308 | 780 | 750 | 240 | 180 | 14 | 15 |
| N4 32-160B/A G | 0,37 | 50 | 32 | 80 | 90 | 360 | 718 | 85 | 160 | 217 | 328 | 780 | 750 | 240 | 180 | 14 | 15 |
| N4 32-160A/A G | 0,37 | 50 | 32 | 80 | 90 | 360 | 718 | 85 | 160 | 217 | 328 | 780 | 750 | 240 | 180 | 14 | 15 |
| N4 32-200B/A G | 0,55 | 50 | 32 | 80 | 90 | 360 | 770 | 85 | 180 | 245 | 367 | 780 | 750 | 240 | 180 | 14 | 15 |
| N4 32-200A/A G | 0,75 | 50 | 32 | 80 | 90 | 360 | 770 | 85 | 180 | 245 | 367 | 780 | 750 | 240 | 180 | 14 | 15 |
| N4 40-160C/A G | 0,37 | 65 | 40 | 80 | 90 | 360 | 718 | 85 | 160 | 217 | 328 | 780 | 750 | 240 | 180 | 14 | 15 |
| N4 40-160B/A G | 0,55 | 65 | 40 | 80 | 90 | 360 | 770 | 85 | 160 | 217 | 339 | 780 | 750 | 240 | 180 | 14 | 15 |
| N4 40-160A/A G | 0,75 | 65 | 40 | 80 | 90 | 360 | 770 | 85 | 160 | 217 | 339 | 780 | 750 | 240 | 180 | 14 | 15 |
| N4 40-200B/A G | 1,1 | 65 | 40 | 100 | 100 | 360 | 845 | 100 | 180 | 260 | 386 | 880 | 850 | 300 | 240 | 14 | 15 |
| N4 40-200A/A G | 1,1 | 65 | 40 | 100 | 100 | 360 | 845 | 100 | 180 | 260 | 386 | 880 | 850 | 300 | 240 | 14 | 15 |
| N4 40-250C/A G | 1,5 | 65 | 40 | 100 | 100 | 360 | 885 | 100 | 225 | 280 | 406 | 880 | 850 | 350 | 290 | 14 | 15 |
| N4 40-250B/A G | 2,2 | 65 | 40 | 100 | 100 | 360 | 929 | 100 | 225 | 280 | 446 | 880 | 850 | 350 | 290 | 14 | 15 |
| N4 40-250A/A G | 3 | 65 | 40 | 100 | 100 | 360 | 929 | 100 | 225 | 280 | 446 | 880 | 850 | 350 | 290 | 14 | 15 |
| N4 50-125F/A G | 0,37 | 65 | 50 | 100 | 90 | 360 | 738 | 85 | 160 | 217 | 328 | 780 | 750 | 240 | 180 | 14 | 15 |
| N4 50-125D/A G | 0,55 | 65 | 50 | 100 | 90 | 360 | 790 | 85 | 160 | 217 | 339 | 780 | 750 | 240 | 180 | 14 | 15 |
| N4 50-125A/A G | 0,75 | 65 | 50 | 100 | 90 | 360 | 790 | 85 | 160 | 217 | 339 | 780 | 750 | 240 | 180 | 14 | 15 |
| N4 50-125S/A G | 0,75 | 65 | 50 | 100 | 90 | 360 | 790 | 85 | 160 | 217 | 339 | 780 | 750 | 240 | 180 | 14 | 15 |
| N4 50-160B/A G | 1,1 | 65 | 50 | 100 | 100 | 360 | 845 | 100 | 180 | 260 | 386 | 880 | 850 | 300 | 240 | 14 | 15 |
| N4 50-160A/A G | 1,1 | 65 | 50 | 100 | 100 | 360 | 845 | 100 | 180 | 260 | 386 | 880 | 850 | 300 | 240 | 14 | 15 |
| N4 50-200C/A G | 1,1 | 65 | 50 | 100 | 100 | 360 | 845 | 100 | 200 | 260 | 386 | 880 | 850 | 300 | 240 | 14 | 15 |
| N4 50-200B/A G | 1,5 | 65 | 50 | 100 | 100 | 360 | 885 | 100 | 200 | 260 | 386 | 880 | 850 | 300 | 240 | 14 | 15 |
| N4 50-200A/A G | 2,2 | 65 | 50 | 100 | 100 | 360 | 929 | 100 | 200 | 260 | 426 | 880 | 850 | 300 | 240 | 14 | 15 |
| N4 50-250D G | 2,2 | 65 | 50 | 100 | 100 | 360 | 929 | 100 | 225 | 280 | 446 | 880 | 850 | 350 | 290 | 14 | 15 |
| N4 50-250C/A G | 2,2 | 65 | 50 | 100 | 100 | 360 | 929 | 100 | 225 | 280 | 446 | 880 | 850 | 350 | 290 | 14 | 15 |
| N4 50-250B/A G | 3 | 65 | 50 | 100 | 100 | 360 | 929 | 100 | 225 | 280 | 446 | 880 | 850 | 350 | 290 | 14 | 15 |
| N4 50-250A/A G | 4 | 65 | 50 | 100 | 100 | 360 | 912 | 100 | 225 | 280 | 457 | 880 | 850 | 350 | 290 | 14 | 15 |
| N4 65-125E/B G | 0,75 | 80 | 65 | 100 | 100 | 360 | 790 | 100 | 180 | 260 | 382 | 880 | 850 | 300 | 240 | 14 | 15 |
| N4 65-125C/B G | 0,75 | 80 | 65 | 100 | 100 | 360 | 790 | 100 | 180 | 260 | 382 | 880 | 850 | 300 | 240 | 14 | 15 |
| N4 65-125A/B G | 1,1 | 80 | 65 | 100 | 100 | 360 | 845 | 100 | 180 | 260 | 386 | 880 | 850 | 300 | 240 | 14 | 15 |
| N4 65-160C/B G | 1,1 | 80 | 65 | 100 | 100 | 360 | 845 | 100 | 200 | 260 | 386 | 880 | 850 | 300 | 240 | 14 | 15 |
| N4 65-160B/B G | 1,1 | 80 | 65 | 100 | 100 | 360 | 845 | 100 | 200 | 260 | 386 | 880 | 850 | 300 | 240 | 14 | 15 |
| N4 65-160A/B G | 1,5 | 80 | 65 | 100 | 100 | 360 | 885 | 100 | 200 | 260 | 386 | 880 | 850 | 300 | 240 | 14 | 15 |
| N4 65-160S G | 2,2 | 80 | 65 | 100 | 100 | 360 | 929 | 100 | 200 | 260 | 426 | 880 | 850 | 350 | 290 | 14 | 15 |
| N4 65-200B/B G | 2,2 | 80 | 65 | 100 | 100 | 360 | 929 | 100 | 225 | 280 | 446 | 880 | 850 | 350 | 290 | 14 | 15 |
| N4 65-200A/B G | 3 | 80 | 65 | 100 | 100 | 360 | 929 | 100 | 225 | 280 | 446 | 880 | 850 | 350 | 290 | 14 | 15 |
| N4 65-250B/B G | 4 | 80 | 65 | 100 | 130 | 470 | 1022 | 110 | 250 | 310 | 487 | 1030 | 990 | 400 | 340 | 18 | 20 |
| N4 65-250A/B G | 5,5 | 80 | 65 | 100 | 130 | 470 | 1123 | 110 | 250 | 310 | 512 | 1030 | 990 | 400 | 340 | 18 | 20 |
| N4 65-315C/A G | 5,5 | 80 | 65 | 125 | 130 | 470 | 1148 | 110 | 280 | 335 | 537 | 1030 | 990 | 400 | 340 | 18 | 20 |
| N4 65-315B/A G | 7,5 | 80 | 65 | 125 | 130 | 470 | 1148 | 110 | 280 | 335 | 537 | 1030 | 990 | 400 | 340 | 18 | 20 |
| N4 65-315A/A G | 11 | 80 | 65 | 125 | 130 | 470 | 1237 | 110 | 280 | 335 | 572 | 1230 | 1190 | 400 | 340 | 18 | 20 |

N

## Dimensions and weight

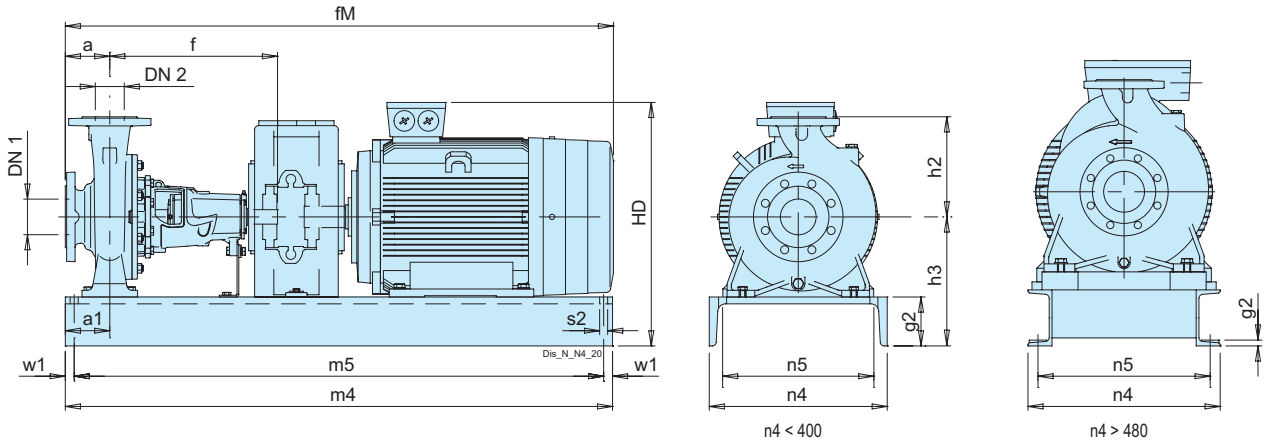


| TYPE | Motor | mm | | | | | | | | | | | | | | | | Kg |
|---|---|---|---|---|---|---|---|---|---|---|---|---|---|---|---|---|---|---|
| | kW | DN1 | DN2 | a | a1 | f | fM | g2 | h2 | h3 | HD | m4 | m5 | n4 | n5 | s1 | w1 | Weight |
| N4 80-160C/B G | 1,1 | 100 | 80 | 125 | 100 | 360 | 870 | 100 | 225 | 280 | 406 | 880 | 850 | 350 | 290 | 14 | 15 | - |
| N4 80-160B/B G | 1,5 | 100 | 80 | 125 | 100 | 360 | 910 | 100 | 225 | 280 | 406 | 880 | 850 | 350 | 290 | 14 | 15 | - |
| N4 80-160A/B G | 2,2 | 100 | 80 | 125 | 100 | 360 | 954 | 100 | 225 | 280 | 446 | 880 | 850 | 350 | 290 | 14 | 15 | - |
| N4 80-200C/B G | 2,2 | 100 | 80 | 125 | 100 | 470 | 1064 | 100 | 250 | 280 | 446 | 1020 | 990 | 350 | 290 | 14 | 15 | - |
| N4 80-200B/B G | 3 | 100 | 80 | 125 | 100 | 470 | 1064 | 100 | 250 | 280 | 446 | 1020 | 990 | 350 | 290 | 14 | 15 | 172 |
| N4 80-200A/B G | 4 | 100 | 80 | 125 | 100 | 470 | 1047 | 100 | 250 | 280 | 457 | 1020 | 990 | 350 | 290 | 14 | 15 | - |
| N4 80-250C/A G | 4 | 100 | 80 | 125 | 130 | 470 | 1047 | 110 | 280 | 310 | 487 | 1030 | 990 | 400 | 340 | 18 | 20 | 210 |
| N4 80-250B/A G | 5,5 | 100 | 80 | 125 | 130 | 470 | 1148 | 110 | 280 | 310 | 512 | 1030 | 990 | 400 | 340 | 18 | 20 | - |
| N4 80-250A/A G | 7,5 | 100 | 80 | 125 | 130 | 470 | 1148 | 110 | 280 | 310 | 512 | 1030 | 990 | 400 | 340 | 18 | 20 | - |
| N4 80-315C/B G | 11 | 100 | 80 | 125 | 130 | 470 | 1237 | 110 | 315 | 360 | 597 | 1230 | 1190 | 400 | 340 | 18 | 20 | - |
| N4 80-315B/B G | 11 | 100 | 80 | 125 | 130 | 470 | 1237 | 110 | 315 | 360 | 597 | 1230 | 1190 | 400 | 340 | 18 | 20 | - |
| N4 80-315A/B G | 15 | 100 | 80 | 125 | 130 | 470 | 1297 | 110 | 315 | 360 | 597 | 1230 | 1190 | 400 | 340 | 18 | 20 | 351 |
| N4 80-315S G | 18,5 | 100 | 80 | 125 | 130 | 470 | 1301 | 110 | 315 | 360 | 646 | 1360 | 1320 | 400 | 340 | 18 | 20 | - |
| N4 80-400C/B G | 18,5 | 125 | 80 | 125 | 115 | 530 | 1361 | 16 | 355 | 445 | 731 | 1250 | 840 | 480 | 430 | 24 | 205 | - |
| N4 80-400B/B G | 22 | 125 | 80 | 125 | 115 | 530 | 1391 | 16 | 355 | 445 | 760 | 1250 | 840 | 480 | 430 | 24 | 205 | - |
| N4 80-400A/B G | 30 | 125 | 80 | 125 | 115 | 530 | 1439 | 16 | 355 | 445 | 760 | 1250 | 840 | 480 | 430 | 24 | 205 | - |
| N4 80-400S G | 37 | 125 | 80 | 125 | 115 | 530 | 1481 | 16 | 355 | 445 | 783 | 1250 | 840 | 480 | 430 | 24 | 205 | - |
| N4 100-200C/A G | 3 | 125 | 100 | 125 | 130 | 470 | 1064 | 110 | 280 | 310 | 476 | 1030 | 990 | 400 | 340 | 18 | 20 | - |
| N4 100-200B/A G | 4 | 125 | 100 | 125 | 130 | 470 | 1047 | 110 | 280 | 310 | 487 | 1030 | 990 | 400 | 340 | 18 | 20 | - |
| N4 100-200A/A G | 5,5 | 125 | 100 | 125 | 130 | 470 | 1148 | 110 | 280 | 310 | 512 | 1030 | 990 | 400 | 340 | 18 | 20 | 208.5 |
| N4 100-250B/A G | 7,5 | 125 | 100 | 140 | 130 | 470 | 1163 | 110 | 280 | 335 | 537 | 1030 | 990 | 400 | 340 | 18 | 20 | 224 |
| N4 100-250A/A G | 11 | 125 | 100 | 140 | 130 | 470 | 1252 | 110 | 280 | 335 | 572 | 1230 | 1190 | 400 | 340 | 18 | 20 | - |
| N4 100-315C/A G | 11 | 125 | 100 | 140 | 130 | 470 | 1252 | 110 | 315 | 360 | 597 | 1230 | 1190 | 400 | 340 | 18 | 20 | 343 |
| N4 100-315B/A G | 15 | 125 | 100 | 140 | 130 | 470 | 1312 | 110 | 315 | 360 | 597 | 1230 | 1190 | 400 | 340 | 18 | 20 | - |
| N4 100-315A/A G | 18,5 | 125 | 100 | 140 | 130 | 470 | 1316 | 110 | 315 | 360 | 646 | 1360 | 1320 | 400 | 340 | 18 | 20 | 255 |
| N4 100-400C/A G | 22 | 125 | 100 | 140 | 115 | 530 | 1406 | 16 | 355 | 445 | 760 | 1250 | 840 | 480 | 430 | 24 | 205 | - |
| N4 100-400B/A G | 30 | 125 | 100 | 140 | 115 | 530 | 1454 | 16 | 355 | 445 | 760 | 1250 | 840 | 480 | 430 | 24 | 205 | - |
| N4 100-400A/A G | 37 | 125 | 100 | 140 | 115 | 530 | 1496 | 16 | 355 | 445 | 783 | 1250 | 840 | 480 | 430 | 24 | 205 | - |
| N4 125-250E/A G | 5,5 | 150 | 125 | 140 | 130 | 470 | 1163 | 110 | 355 | 360 | 562 | 1030 | 990 | 400 | 340 | 18 | 20 | - |
| N4 125-250D/A G | 7,5 | 150 | 125 | 140 | 130 | 470 | 1163 | 110 | 355 | 360 | 562 | 1030 | 990 | 400 | 340 | 18 | 20 | - |
| N4 125-250C/A G | 11 | 150 | 125 | 140 | 130 | 470 | 1252 | 110 | 355 | 360 | 597 | 1230 | 1190 | 400 | 340 | 18 | 20 | 328.5 |
| N4 125-250B/A G | 11 | 150 | 125 | 140 | 130 | 470 | 1252 | 110 | 355 | 360 | 597 | 1230 | 1190 | 400 | 340 | 18 | 20 | - |
| N4 125-250A/A G | 15 | 150 | 125 | 140 | 130 | 470 | 1312 | 110 | 355 | 360 | 597 | 1230 | 1190 | 400 | 340 | 18 | 20 | - |
| N4 125-315C/A G | 18,5 | 150 | 125 | 140 | 115 | 530 | 1376 | 16 | 355 | 445 | 731 | 1250 | 840 | 480 | 430 | 24 | 205 | - |
| N4 125-315B/A G | 22 | 150 | 125 | 140 | 115 | 530 | 1406 | 16 | 355 | 445 | 760 | 1250 | 840 | 480 | 430 | 24 | 205 | - |
| N4 125-315A/A G | 30 | 150 | 125 | 140 | 115 | 530 | 1454 | 16 | 355 | 445 | 760 | 1250 | 840 | 480 | 430 | 24 | 205 | 498 |
| N4 125-400C/A G | 37 | 150 | 125 | 140 | 115 | 530 | 1496 | 16 | 400 | 480 | 818 | 1250 | 840 | 480 | 430 | 24 | 205 | - |
| N4 125-400B/A G | 45 | 150 | 125 | 140 | 115 | 530 | 1556 | 16 | 400 | 480 | 818 | 1250 | 840 | 480 | 430 | 24 | 205 | 615 |
| N4 125-400A/A G | 55 | 150 | 125 | 140 | 115 | 530 | 1595 | 17.5 | 400 | 540 | 950 | 1400 | 940 | 510 | 450 | 24 | 230 | 716 |
| N4 150-315D/B G | 18,5 | 200 | 150 | 160 | 115 | 530 | 1396 | 16 | 400 | 445 | 731 | 1250 | 840 | 480 | 430 | 24 | 205 | 442 |
| N4 150-315C/B G | 22 | 200 | 150 | 160 | 115 | 530 | 1426 | 16 | 400 | 445 | 760 | 1250 | 840 | 480 | 430 | 24 | 205 | - |
| N4 150-315B/B G | 30 | 200 | 150 | 160 | 115 | 530 | 1474 | 16 | 400 | 445 | 760 | 1250 | 840 | 480 | 430 | 24 | 205 | - |
| N4 150-315A/B G | 37 | 200 | 150 | 160 | 115 | 530 | 1516 | 16 | 400 | 445 | 783 | 1250 | 840 | 480 | 430 | 24 | 205 | - |
| N4 150-315S G | 45 | 200 | 150 | 160 | 115 | 530 | 1576 | 16 | 400 | 445 | 783 | 1250 | 840 | 480 | 430 | 24 | 205 | - |
| N4 150-400B/B G | 55 | 200 | 150 | 160 | 115 | 530 | 1615 | 17.5 | 450 | 540 | 950 | 1400 | 940 | 510 | 450 | 24 | 230 | - |
| N4 150-400A/B G | 75 | 200 | 150 | 160 | 115 | 530 | 1688 | 17.5 | 450 | 540 | 973 | 1400 | 940 | 510 | 450 | 24 | 230 | - |
| N4 150-400S G | 90 | 200 | 150 | 160 | 115 | 530 | 1798 | 17.5 | 450 | 540 | 973 | 1400 | 940 | 510 | 450 | 24 | 230 | - |
| N4 200-315C G | 45 | 250 | 200 | 180 | 150 | 630 | 1634 | 17 | 450 | 580 | 910 | 1500 | 1040 | 690 | 630 | 24 | 230 | - |
| N4 200-315B G | 55 | 250 | 200 | 180 | 150 | 630 | 1696 | 17 | 450 | 580 | 955 | 1500 | 1040 | 690 | 630 | 24 | 230 | - |
| N4 200-315A G | 75 | 250 | 200 | 180 | 150 | 630 | 1836 | 17 | 450 | 580 | 970 | 1600 | 1140 | 690 | 630 | 24 | 230 | - |
| N4 200-400C G | 90 | 250 | 200 | 180 | 150 | 630 | 1886 | 17 | 500 | 580 | 970 | 1800 | 1340 | 690 | 630 | 24 | 230 | - |
| N4 200-400B G | 110 | 250 | 200 | 180 | 150 | 630 | 2141 | 17 | 500 | 580 | 1110 | 1800 | 1340 | 690 | 630 | 24 | 230 | - |
| N4 200-400A G | 132 | 250 | 200 | 180 | 150 | 630 | 2141 | 17 | 500 | 580 | 1110 | 1800 | 1340 | 690 | 630 | 24 | 230 | - |

N

## Dimensions and weights

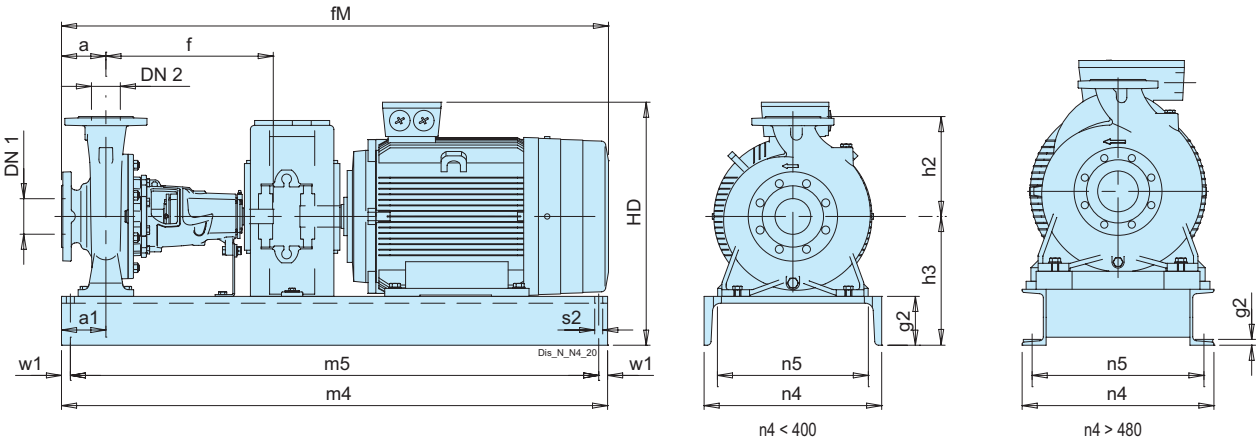


| TYPE | Motor | mm | | | | | | | | | | | | | | | |
|---|---|---|---|---|---|---|---|---|---|---|---|---|---|---|---|---|---|
| | kW | DN1 | DN2 | a | a1 | f | fM | g2 | h2 | h3 | HD | m4 | m5 | n4 | n5 | s1 | w1 |
| BN 32-125F/A G | 0,55 | 50 | 32 | 80 | 90 | 360 | 718 | 85 | 140 | 197 | 308 | 780 | 750 | 240 | 180 | 14 | 15 |
| BN 32-125D/A G | 0,75 | 50 | 32 | 80 | 90 | 360 | 770 | 85 | 140 | 197 | 319 | 780 | 750 | 240 | 180 | 14 | 15 |
| BN 32-125D-S/A G | 1,1 | 50 | 32 | 80 | 90 | 360 | 770 | 85 | 140 | 197 | 319 | 780 | 750 | 240 | 180 | 14 | 15 |
| BN 32-125A/A G | 1,1 | 50 | 32 | 80 | 90 | 360 | 770 | 85 | 140 | 197 | 319 | 780 | 750 | 240 | 180 | 14 | 15 |
| BN 32-125A-S/A G | 1,5 | 50 | 32 | 80 | 90 | 360 | 825 | 85 | 140 | 197 | 323 | 780 | 750 | 240 | 180 | 14 | 15 |
| BN 32-125S/A G | 1,5 | 50 | 32 | 80 | 90 | 360 | 825 | 85 | 140 | 197 | 323 | 780 | 750 | 240 | 180 | 14 | 15 |
| BN 32-160B/A G | 1,5 | 50 | 32 | 80 | 90 | 360 | 825 | 85 | 160 | 217 | 343 | 780 | 750 | 240 | 180 | 14 | 15 |
| BN 32-160B-S/A G | 2,2 | 50 | 32 | 80 | 90 | 360 | 865 | 85 | 160 | 217 | 343 | 780 | 750 | 240 | 180 | 14 | 15 |
| BN 32-160A/A G | 2,2 | 50 | 32 | 80 | 90 | 360 | 865 | 85 | 160 | 217 | 343 | 780 | 750 | 240 | 180 | 14 | 15 |
| BN 32-160A-S/A G | 3 | 50 | 32 | 80 | 90 | 360 | 920 | 100 | 160 | 232 | 398 | 880 | 850 | 300 | 240 | 14 | 15 |
| BN 32-200D/A G | 2,2 | 50 | 32 | 80 | 90 | 360 | 865 | 85 | 180 | 245 | 371 | 780 | 750 | 240 | 180 | 14 | 15 |
| BN 32-200D-S/A G | 3 | 50 | 32 | 80 | 90 | 360 | 920 | 100 | 180 | 260 | 426 | 880 | 850 | 300 | 240 | 14 | 15 |
| BN 32-200C/A G | 3 | 50 | 32 | 80 | 90 | 360 | 920 | 100 | 180 | 260 | 426 | 880 | 850 | 300 | 240 | 14 | 15 |
| BN 32-200A/A G | 4 | 50 | 32 | 80 | 90 | 360 | 903 | 100 | 180 | 260 | 437 | 880 | 850 | 300 | 240 | 14 | 15 |
| BN 32-200A-S/A G | 5,5 | 50 | 32 | 80 | 100 | 360 | 954 | 100 | 180 | 260 | 462 | 1020 | 990 | 350 | 290 | 14 | 15 |
| BN 32L-160C G | 2,2 | 50 | 32 | 80 | 90 | 360 | 865 | 85 | 160 | 217 | 343 | 780 | 750 | 240 | 180 | 14 | 15 |
| BN 32L-160B G | 3 | 50 | 32 | 80 | 90 | 360 | 920 | 100 | 160 | 232 | 398 | 880 | 850 | 300 | 240 | 14 | 15 |
| BN 32L-160A G | 4 | 50 | 32 | 80 | 90 | 360 | 903 | 100 | 160 | 232 | 409 | 880 | 850 | 300 | 240 | 14 | 15 |
| BN 32L-200C G | 4 | 50 | 32 | 80 | 90 | 360 | 903 | 100 | 180 | 260 | 437 | 880 | 850 | 300 | 240 | 14 | 15 |
| BN 32L-200B G | 5,5 | 50 | 32 | 80 | 90 | 360 | 953 | 100 | 180 | 260 | 462 | 1020 | 990 | 350 | 290 | 14 | 15 |
| BN 32L-200A G | 7,5 | 50 | 32 | 80 | 90 | 360 | 953 | 100 | 180 | 260 | 462 | 1020 | 990 | 350 | 290 | 14 | 15 |
| BN 40-125F/A G | 1,1 | 65 | 40 | 80 | 90 | 360 | 770 | 85 | 140 | 197 | 319 | 780 | 750 | 240 | 180 | 14 | 15 |
| BN 40-125C/A G | 1,5 | 65 | 40 | 80 | 90 | 360 | 825 | 85 | 140 | 197 | 323 | 780 | 750 | 240 | 180 | 14 | 15 |
| BN 40-125A/A G | 2,2 | 65 | 40 | 80 | 90 | 360 | 865 | 85 | 140 | 197 | 323 | 780 | 750 | 240 | 180 | 14 | 15 |
| BN 40-160C/A G | 2,2 | 65 | 40 | 80 | 90 | 360 | 865 | 85 | 160 | 217 | 343 | 780 | 750 | 240 | 180 | 14 | 15 |
| BN 40-160B/A G | 3 | 65 | 40 | 80 | 90 | 360 | 920 | 100 | 160 | 232 | 398 | 880 | 850 | 300 | 240 | 14 | 15 |
| BN 40-160A/A G | 4 | 65 | 40 | 80 | 90 | 360 | 903 | 100 | 160 | 232 | 409 | 880 | 850 | 300 | 240 | 14 | 15 |
| BN 40-160A-S/A G | 5,5 | 65 | 40 | 80 | 90 | 360 | 953 | 100 | 160 | 260 | 434 | 1020 | 990 | 350 | 290 | 14 | 15 |
| BN 40-200D/A G | 4 | 65 | 40 | 100 | 100 | 360 | 923 | 100 | 180 | 260 | 437 | 880 | 850 | 300 | 240 | 14 | 15 |
| BN 40-200D-S/A G | 5,5 | 65 | 40 | 100 | 100 | 360 | 973 | 100 | 180 | 260 | 462 | 1020 | 990 | 350 | 290 | 14 | 15 |
| BN 40-200C/A G | 4 | 65 | 40 | 100 | 100 | 360 | 923 | 100 | 180 | 260 | 437 | 880 | 850 | 300 | 240 | 14 | 15 |
| BN 40-200C-S/A G | 5,5 | 65 | 40 | 100 | 100 | 360 | 973 | 100 | 180 | 260 | 462 | 1020 | 990 | 350 | 290 | 14 | 15 |
| BN 40-200B/A G | 5,5 | 65 | 40 | 100 | 100 | 360 | 973 | 100 | 180 | 260 | 462 | 1020 | 990 | 350 | 290 | 14 | 15 |
| BN 40-200B-S/A G | 7,5 | 65 | 40 | 100 | 100 | 360 | 973 | 100 | 180 | 260 | 462 | 1020 | 990 | 350 | 290 | 14 | 15 |
| BN 40-200AR/A G | 5,5 | 65 | 40 | 100 | 100 | 360 | 973 | 100 | 180 | 260 | 462 | 1020 | 990 | 350 | 290 | 14 | 15 |
| BN 40-200AR-S/A G | 7,5 | 65 | 40 | 100 | 100 | 360 | 973 | 100 | 180 | 260 | 462 | 1020 | 990 | 350 | 290 | 14 | 15 |
| BN 40-200A/A G | 7,5 | 65 | 40 | 100 | 100 | 360 | 973 | 100 | 180 | 260 | 462 | 1020 | 990 | 350 | 290 | 14 | 15 |
| BN 40-250C/A G | 11 | 65 | 40 | 100 | 100 | 360 | 1082 | 100 | 225 | 280 | 517 | 1020 | 990 | 350 | 290 | 14 | 15 |
| BN 40-250B/A G | 11 | 65 | 40 | 100 | 100 | 360 | 1082 | 100 | 225 | 280 | 517 | 1020 | 990 | 350 | 290 | 14 | 15 |
| BN 40-250A/A G | 15 | 65 | 40 | 100 | 100 | 360 | 1082 | 100 | 225 | 280 | 517 | 1020 | 990 | 350 | 290 | 14 | 15 |

N

## Dimensions and weights

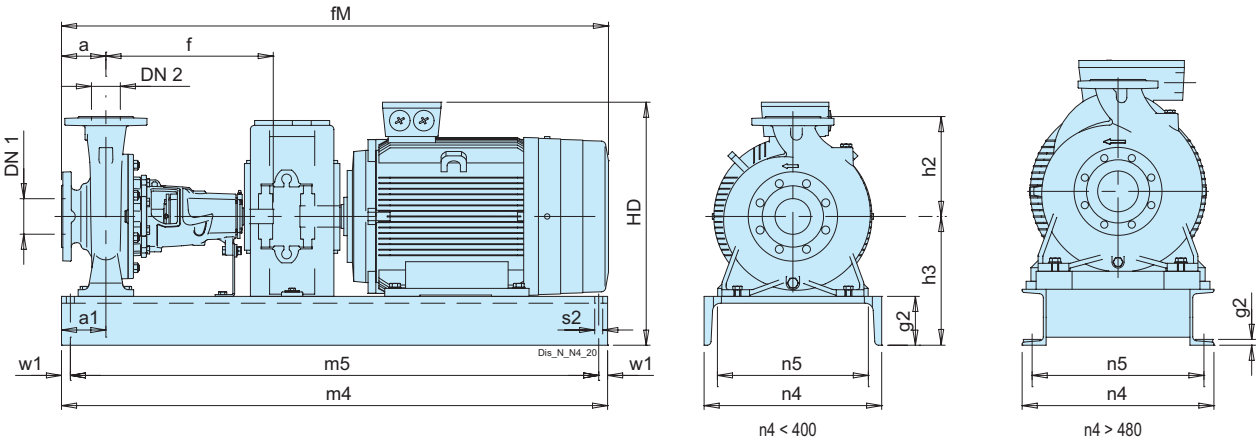


| TYPE | Motor | mm | | | | | | | | | | | | | | | |
|---|---|---|---|---|---|---|---|---|---|---|---|---|---|---|---|---|---|
| | kW | DN1 | DN2 | a | a1 | f | fM | g2 | h2 | h3 | HD | m4 | m5 | n4 | n5 | s1 | w1 |
| BN 50-125F/A G | 2,2 | 65 | 50 | 100 | 90 | 360 | 885 | 85 | 160 | 217 | 343 | 780 | 750 | 240 | 180 | 14 | 15 |
| BN 50-125D/A G | 3 | 65 | 50 | 100 | 90 | 360 | 940 | 100 | 160 | 232 | 398 | 880 | 850 | 300 | 240 | 14 | 15 |
| BN 50-125A/A G | 4 | 65 | 50 | 100 | 90 | 360 | 923 | 100 | 160 | 232 | 409 | 880 | 850 | 300 | 240 | 14 | 15 |
| BN 50-125S/A G | 4 | 65 | 50 | 100 | 90 | 360 | 923 | 100 | 160 | 232 | 409 | 880 | 850 | 300 | 240 | 14 | 15 |
| BN 50-125S-S/A G | 5,5 | 65 | 50 | 100 | 90 | 360 | 973 | 100 | 160 | 232 | 434 | 1020 | 990 | 350 | 290 | 14 | 15 |
| BN 50-160B/A G | 5,5 | 65 | 50 | 100 | 100 | 360 | 973 | 100 | 180 | 260 | 462 | 1020 | 990 | 350 | 290 | 14 | 15 |
| BN 50-160A/A G | 7,5 | 65 | 50 | 100 | 100 | 360 | 973 | 100 | 180 | 260 | 462 | 1020 | 990 | 350 | 290 | 14 | 15 |
| BN 50-200B/A G | 11 | 65 | 50 | 100 | 100 | 360 | 1082 | 100 | 200 | 260 | 497 | 1020 | 990 | 350 | 290 | 14 | 15 |
| BN 50-200A/A G | 11 | 65 | 50 | 100 | 100 | 360 | 1082 | 100 | 200 | 260 | 497 | 1020 | 990 | 350 | 290 | 14 | 15 |
| BN 50-200S/A G | 15 | 65 | 50 | 100 | 100 | 360 | 1082 | 100 | 200 | 260 | 497 | 1020 | 990 | 350 | 290 | 14 | 15 |
| BN 50-250C/A G | 11 | 65 | 50 | 100 | 100 | 360 | 1082 | 100 | 225 | 280 | 517 | 1020 | 990 | 350 | 290 | 14 | 15 |
| BN 50-250B/A G | 15 | 65 | 50 | 100 | 100 | 360 | 1082 | 100 | 225 | 280 | 517 | 1020 | 990 | 350 | 290 | 14 | 15 |
| BN 50-250A/A G | 18,5 | 65 | 50 | 100 | 100 | 360 | 1142 | 100 | 225 | 280 | 517 | 1020 | 990 | 350 | 290 | 14 | 15 |
| BN 50-250S/A G | 22 | 65 | 50 | 100 | 100 | 360 | 1218 | 100 | 225 | 280 | 566 | 1140 | 1110 | 350 | 290 | 14 | 15 |
| BN 65-125E/B G | 4 | 80 | 65 | 100 | 100 | 360 | 923 | 100 | 180 | 260 | 437 | 880 | 850 | 300 | 240 | 14 | 15 |
| BN 65-125C/B G | 5,5 | 80 | 65 | 100 | 100 | 360 | 973 | 100 | 180 | 260 | 462 | 1020 | 990 | 350 | 290 | 14 | 15 |
| BN 65-125A/B G | 7,5 | 80 | 65 | 100 | 100 | 360 | 973 | 100 | 180 | 260 | 462 | 1020 | 990 | 350 | 290 | 14 | 15 |
| BN 65-160D/B G | 7,5 | 80 | 65 | 100 | 100 | 360 | 973 | 100 | 200 | 260 | 462 | 1020 | 990 | 350 | 290 | 14 | 15 |
| BN 65-160C/B G | 11 | 80 | 65 | 100 | 100 | 360 | 1112 | 100 | 200 | 260 | 497 | 1020 | 990 | 350 | 290 | 14 | 15 |
| BN 65-160B/B G | 11 | 80 | 65 | 100 | 100 | 360 | 1112 | 100 | 200 | 260 | 497 | 1020 | 990 | 350 | 290 | 14 | 15 |
| BN 65-160A/B G | 15 | 80 | 65 | 100 | 100 | 360 | 1082 | 100 | 200 | 260 | 497 | 1020 | 990 | 350 | 290 | 14 | 15 |
| BN 65-160AR G | 15 | 80 | 65 | 100 | 100 | 360 | 1082 | 100 | 200 | 260 | 497 | 1020 | 990 | 350 | 290 | 14 | 15 |
| BN 65-200C/B G | 15 | 80 | 65 | 100 | 100 | 360 | 1082 | 100 | 225 | 280 | 517 | 1020 | 990 | 350 | 290 | 14 | 15 |
| BN 65-200B/B G | 18,5 | 80 | 65 | 100 | 100 | 360 | 1142 | 100 | 225 | 280 | 517 | 1020 | 990 | 350 | 290 | 14 | 15 |
| BN 65-200A/B G | 22 | 80 | 65 | 100 | 100 | 360 | 1218 | 100 | 225 | 280 | 566 | 1140 | 1110 | 350 | 290 | 14 | 15 |
| BN 65-250C/B G | 22 | 80 | 65 | 100 | 130 | 470 | 1328 | 110 | 250 | 310 | 596 | 1360 | 1320 | 400 | 340 | 18 | 20 |
| BN 65-250B/B G | 30 | 80 | 65 | 100 | 130 | 470 | 1348 | 110 | 250 | 310 | 625 | 1360 | 1320 | 400 | 340 | 18 | 20 |
| BN 65-250A/B G | 37 | 80 | 65 | 100 | 130 | 470 | 1348 | 110 | 250 | 310 | 625 | 1360 | 1320 | 400 | 340 | 18 | 20 |
| BN 80-160E/B G | 7,5 | 100 | 80 | 125 | 100 | 360 | 998 | 100 | 225 | 280 | 482 | 1020 | 990 | 350 | 290 | 14 | 15 |
| BN 80-160D/B G | 11 | 100 | 80 | 125 | 100 | 360 | 1107 | 100 | 225 | 280 | 517 | 1020 | 990 | 350 | 290 | 14 | 15 |
| BN 80-160C/B G | 11 | 100 | 80 | 125 | 100 | 360 | 1107 | 100 | 225 | 280 | 517 | 1020 | 990 | 350 | 290 | 14 | 15 |
| BN 80-160B/B G | 15 | 100 | 80 | 125 | 100 | 360 | 1107 | 100 | 225 | 280 | 517 | 1020 | 990 | 350 | 290 | 14 | 15 |
| BN 80-160A/B G | 18,5 | 100 | 80 | 125 | 100 | 360 | 1167 | 100 | 225 | 280 | 517 | 1020 | 990 | 350 | 290 | 14 | 15 |
| BN 80-200B/B G | 22 | 100 | 80 | 125 | 100 | 470 | 1353 | 110 | 250 | 290 | 576 | 1230 | 1190 | 400 | 340 | 18 | 20 |
| BN 80-200A/B G | 30 | 100 | 80 | 125 | 130 | 470 | 1373 | 110 | 250 | 310 | 625 | 1360 | 1320 | 400 | 340 | 18 | 20 |
| BN 80-250E/A G | 22 | 100 | 80 | 125 | 130 | 470 | 1353 | 110 | 280 | 310 | 596 | 1360 | 1320 | 400 | 340 | 18 | 20 |
| BN 80-250D/A G | 30 | 100 | 80 | 125 | 130 | 470 | 1373 | 110 | 280 | 310 | 625 | 1360 | 1320 | 400 | 340 | 18 | 20 |
| BN 80-250C/A G | 37 | 100 | 80 | 125 | 130 | 470 | 1373 | 110 | 280 | 310 | 625 | 1360 | 1320 | 400 | 340 | 18 | 20 |
| BN 80-250B/A G | 45 | 100 | 80 | 125 | 95 | 470 | 1470 | 16 | 280 | 385 | 723 | 1250 | 840 | 480 | 430 | 24 | 205 |
| BN 80-250A/A G | 55 | 100 | 80 | 125 | 95 | 470 | 1509 | 16 | 280 | 415 | 825 | 1250 | 840 | 480 | 430 | 24 | 205 |
| BN 100-200E/A G | 18,5 | 125 | 100 | 125 | 130 | 470 | 1263 | 110 | 280 | 310 | 547 | 1230 | 1190 | 400 | 340 | 18 | 20 |
| BN 100-200D/A G | 22 | 125 | 100 | 125 | 130 | 470 | 1353 | 110 | 280 | 310 | 596 | 1360 | 1320 | 400 | 340 | 18 | 20 |
| BN 100-200C/A G | 30 | 125 | 100 | 125 | 130 | 470 | 1373 | 110 | 280 | 310 | 625 | 1360 | 1320 | 400 | 340 | 18 | 20 |
| BN 100-200B/A G | 37 | 125 | 100 | 125 | 130 | 470 | 1373 | 110 | 280 | 310 | 625 | 1360 | 1320 | 400 | 340 | 18 | 20 |
| BN 100-200A/A G | 45 | 125 | 100 | 125 | 95 | 470 | 1470 | 16 | 280 | 385 | 723 | 1250 | 840 | 480 | 430 | 24 | 205 |
| BN 100-250B/A G | 55 | 125 | 100 | 140 | 95 | 470 | 1524 | 16 | 280 | 415 | 825 | 1250 | 840 | 480 | 430 | 24 | 205 |
| BN 100-250A/A G | 75 | 125 | 100 | 140 | 95 | 470 | 1597 | 17.5 | 280 | 505 | 938 | 1400 | 940 | 510 | 450 | 24 | 230 |

N

## Dimensions and weights

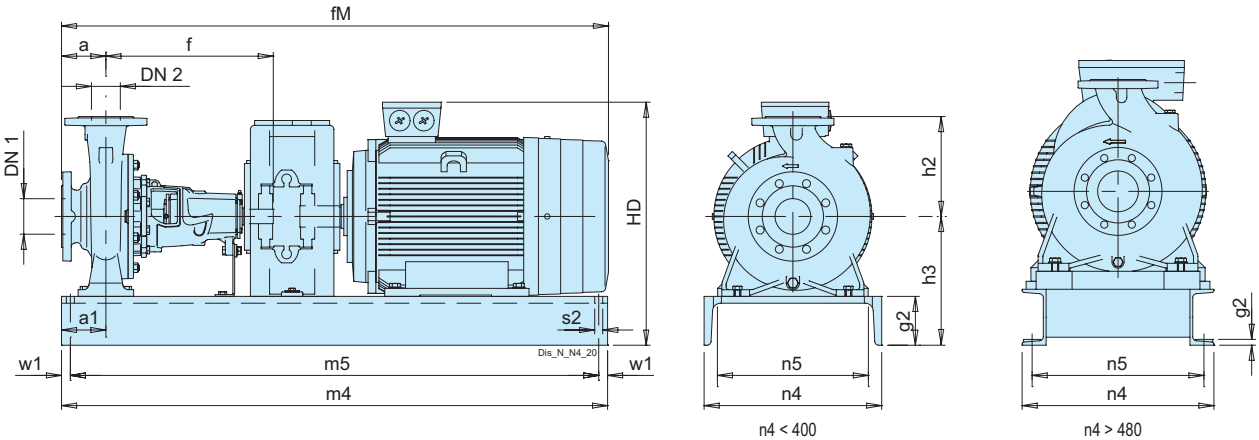


| TYPE | Motor | mm | | | | | | | | | | | | | | | |
|---|---|---|---|---|---|---|---|---|---|---|---|---|---|---|---|---|---|
| | kW | DN1 | DN2 | a | a1 | f | fM | g2 | h2 | h3 | HD | m4 | m5 | n4 | n5 | s1 | w1 |
| BN4 32-125F/A G | 0,25 | 50 | 32 | 80 | 90 | 360 | 718 | 85 | 140 | 197 | 308 | 780 | 750 | 240 | 180 | 14 | 15 |
| BN4 32-125D/A G | 0,25 | 50 | 32 | 80 | 90 | 360 | 718 | 85 | 140 | 197 | 308 | 780 | 750 | 240 | 180 | 14 | 15 |
| BN4 32-125A/A G | 0,25 | 50 | 32 | 80 | 90 | 360 | 718 | 85 | 140 | 197 | 308 | 780 | 750 | 240 | 180 | 14 | 15 |
| BN4 32-160B/A G | 0,37 | 50 | 32 | 80 | 90 | 360 | 718 | 85 | 160 | 217 | 328 | 780 | 750 | 240 | 180 | 14 | 15 |
| BN4 32-160A/A G | 0,37 | 50 | 32 | 80 | 90 | 360 | 718 | 85 | 160 | 217 | 328 | 780 | 750 | 240 | 180 | 14 | 15 |
| BN4 32-200B/A G | 0,55 | 50 | 32 | 80 | 90 | 360 | 770 | 85 | 180 | 245 | 367 | 780 | 750 | 240 | 180 | 14 | 15 |
| BN4 32-200A/A G | 0,75 | 50 | 32 | 80 | 90 | 360 | 770 | 85 | 180 | 245 | 367 | 780 | 750 | 240 | 180 | 14 | 15 |
| BN4 40-160C/A G | 0,37 | 65 | 40 | 80 | 90 | 360 | 718 | 85 | 160 | 217 | 328 | 780 | 750 | 240 | 180 | 14 | 15 |
| BN4 40-160B/A G | 0,55 | 65 | 40 | 80 | 90 | 360 | 770 | 85 | 160 | 217 | 339 | 780 | 750 | 240 | 180 | 14 | 15 |
| BN4 40-160A/A G | 0,75 | 65 | 40 | 80 | 90 | 360 | 770 | 85 | 160 | 217 | 339 | 780 | 750 | 240 | 180 | 14 | 15 |
| BN4 40-200B/A G | 1,1 | 65 | 40 | 100 | 100 | 360 | 845 | 100 | 180 | 260 | 386 | 880 | 850 | 300 | 240 | 14 | 15 |
| BN4 40-200A/A G | 1,1 | 65 | 40 | 100 | 100 | 360 | 845 | 100 | 180 | 260 | 386 | 880 | 850 | 300 | 240 | 14 | 15 |
| BN4 40-250C/A G | 1,5 | 65 | 40 | 100 | 100 | 360 | 885 | 100 | 225 | 280 | 406 | 880 | 850 | 350 | 290 | 14 | 15 |
| BN4 40-250B/A G | 2,2 | 65 | 40 | 100 | 100 | 360 | 929 | 100 | 225 | 280 | 446 | 880 | 850 | 350 | 290 | 14 | 15 |
| BN4 40-250A/A G | 3 | 65 | 40 | 100 | 100 | 360 | 929 | 100 | 225 | 280 | 446 | 880 | 850 | 350 | 290 | 14 | 15 |
| BN4 50-125F/A G | 0,37 | 65 | 50 | 100 | 90 | 360 | 738 | 85 | 160 | 217 | 328 | 780 | 750 | 240 | 180 | 14 | 15 |
| BN4 50-125D/A G | 0,55 | 65 | 50 | 100 | 90 | 360 | 790 | 85 | 160 | 217 | 339 | 780 | 750 | 240 | 180 | 14 | 15 |
| BN4 50-125A/A G | 0,75 | 65 | 50 | 100 | 90 | 360 | 790 | 85 | 160 | 217 | 339 | 780 | 750 | 240 | 180 | 14 | 15 |
| BN4 50-125S/A G | 0,75 | 65 | 50 | 100 | 90 | 360 | 790 | 85 | 160 | 217 | 339 | 780 | 750 | 240 | 180 | 14 | 15 |
| BN4 50-160B/A G | 1,1 | 65 | 50 | 100 | 100 | 360 | 845 | 100 | 180 | 260 | 386 | 880 | 850 | 300 | 240 | 14 | 15 |
| BN4 50-160A/A G | 1,1 | 65 | 50 | 100 | 100 | 360 | 845 | 100 | 180 | 260 | 386 | 880 | 850 | 300 | 240 | 14 | 15 |
| BN4 50-200C/A G | 1,1 | 65 | 50 | 100 | 100 | 360 | 845 | 100 | 200 | 260 | 386 | 880 | 850 | 300 | 240 | 14 | 15 |
| BN4 50-200B/A G | 1,5 | 65 | 50 | 100 | 100 | 360 | 885 | 100 | 200 | 260 | 386 | 880 | 850 | 300 | 240 | 14 | 15 |
| BN4 50-200A/A G | 2,2 | 65 | 50 | 100 | 100 | 360 | 929 | 100 | 200 | 260 | 426 | 880 | 850 | 300 | 240 | 14 | 15 |
| BN4 50-250D G | 2,2 | 65 | 50 | 100 | 100 | 360 | 929 | 100 | 225 | 280 | 446 | 880 | 850 | 350 | 290 | 14 | 15 |
| BN4 50-250C/A G | 2,2 | 65 | 50 | 100 | 100 | 360 | 929 | 100 | 225 | 280 | 446 | 880 | 850 | 350 | 290 | 14 | 15 |
| BN4 50-250B/A G | 3 | 65 | 50 | 100 | 100 | 360 | 929 | 100 | 225 | 280 | 446 | 880 | 850 | 350 | 290 | 14 | 15 |
| BN4 50-250A/A G | 4 | 65 | 50 | 100 | 100 | 360 | 912 | 100 | 225 | 280 | 457 | 880 | 850 | 350 | 290 | 14 | 15 |
| BN4 65-125E/B G | 0,75 | 80 | 65 | 100 | 100 | 360 | 790 | 100 | 180 | 260 | 382 | 880 | 850 | 300 | 240 | 14 | 15 |
| BN4 65-125C/B G | 0,75 | 80 | 65 | 100 | 100 | 360 | 790 | 100 | 180 | 260 | 382 | 880 | 850 | 300 | 240 | 14 | 15 |
| BN4 65-125A/B G | 1,1 | 80 | 65 | 100 | 100 | 360 | 845 | 100 | 180 | 260 | 386 | 880 | 850 | 300 | 240 | 14 | 15 |
| BN4 65-160C/B G | 1,1 | 80 | 65 | 100 | 100 | 360 | 845 | 100 | 200 | 260 | 386 | 880 | 850 | 300 | 240 | 14 | 15 |
| BN4 65-160B/B G | 1,1 | 80 | 65 | 100 | 100 | 360 | 845 | 100 | 200 | 260 | 386 | 880 | 850 | 300 | 240 | 14 | 15 |
| BN4 65-160A/B G | 1,5 | 80 | 65 | 100 | 100 | 360 | 885 | 100 | 200 | 260 | 386 | 880 | 850 | 300 | 240 | 14 | 15 |
| BN4 65-160S G | 2,2 | 80 | 65 | 100 | 100 | 360 | 929 | 100 | 200 | 260 | 426 | 880 | 850 | 350 | 290 | 14 | 15 |
| BN4 65-200B/B G | 2,2 | 80 | 65 | 100 | 100 | 360 | 929 | 100 | 225 | 280 | 446 | 880 | 850 | 350 | 290 | 14 | 15 |
| BN4 65-200A/B G | 3 | 80 | 65 | 100 | 100 | 360 | 929 | 100 | 225 | 280 | 446 | 880 | 850 | 350 | 290 | 14 | 15 |
| BN4 65-250B/B G | 4 | 80 | 65 | 100 | 130 | 470 | 1022 | 110 | 250 | 310 | 487 | 1030 | 990 | 400 | 340 | 18 | 20 |
| BN4 65-250A/B G | 5,5 | 80 | 65 | 100 | 130 | 470 | 1123 | 110 | 250 | 310 | 512 | 1030 | 990 | 400 | 340 | 18 | 20 |
| BN4 65-315C/A G | 5,5 | 80 | 65 | 125 | 130 | 470 | 1148 | 110 | 280 | 335 | 537 | 1030 | 990 | 400 | 340 | 18 | 20 |
| BN4 65-315B/A G | 7,5 | 80 | 65 | 125 | 130 | 470 | 1148 | 110 | 280 | 335 | 537 | 1030 | 990 | 400 | 340 | 18 | 20 |
| BN4 65-315A/A G | 11 | 80 | 65 | 125 | 130 | 470 | 1237 | 110 | 280 | 335 | 572 | 1230 | 1190 | 400 | 340 | 18 | 20 |

N

## Dimensions and weights

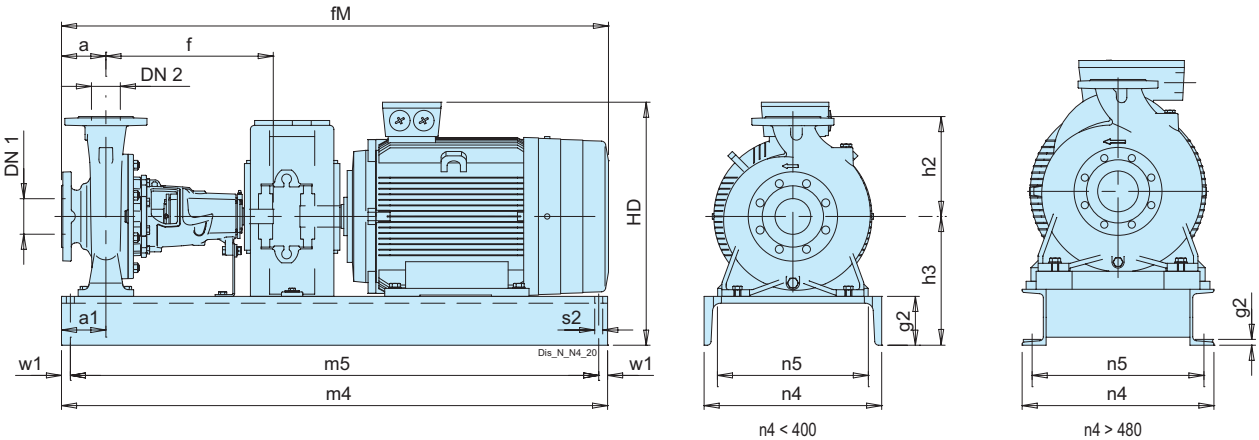


| TYPE | Motor | mm | | | | | | | | | | | | | | | |
|---|---|---|---|---|---|---|---|---|---|---|---|---|---|---|---|---|---|
| | kW | DN1 | DN2 | a | a1 | f | fM | g2 | h2 | h3 | HD | m4 | m5 | n4 | n5 | s1 | w1 |
| BN4 80-160C/B G | 1,1 | 100 | 80 | 125 | 100 | 360 | 870 | 100 | 225 | 280 | 406 | 880 | 850 | 350 | 290 | 14 | 15 |
| BN4 80-160B/B G | 1,5 | 100 | 80 | 125 | 100 | 360 | 910 | 100 | 225 | 280 | 406 | 880 | 850 | 350 | 290 | 14 | 15 |
| BN4 80-160A/B G | 2,2 | 100 | 80 | 125 | 100 | 360 | 954 | 100 | 225 | 280 | 446 | 880 | 850 | 350 | 290 | 14 | 15 |
| BN4 80-200C/B G | 2,2 | 100 | 80 | 125 | 100 | 470 | 1064 | 100 | 250 | 280 | 446 | 1020 | 990 | 350 | 290 | 14 | 15 |
| BN4 80-200B/B G | 3 | 100 | 80 | 125 | 100 | 470 | 1064 | 100 | 250 | 280 | 446 | 1020 | 990 | 350 | 290 | 14 | 15 |
| BN4 80-200A/B G | 4 | 100 | 80 | 125 | 100 | 470 | 1047 | 100 | 250 | 280 | 457 | 1020 | 990 | 350 | 290 | 14 | 15 |
| BN4 80-250C/A G | 4 | 100 | 80 | 125 | 130 | 470 | 1047 | 110 | 280 | 310 | 487 | 1030 | 990 | 400 | 340 | 18 | 20 |
| BN4 80-250B/A G | 5,5 | 100 | 80 | 125 | 130 | 470 | 1148 | 110 | 280 | 310 | 512 | 1030 | 990 | 400 | 340 | 18 | 20 |
| BN4 80-250A/A G | 7,5 | 100 | 80 | 125 | 130 | 470 | 1148 | 110 | 280 | 310 | 512 | 1030 | 990 | 400 | 340 | 18 | 20 |
| BN4 80-315C/B G | 11 | 100 | 80 | 125 | 130 | 470 | 1237 | 110 | 315 | 360 | 597 | 1230 | 1190 | 400 | 340 | 18 | 20 |
| BN4 80-315B/B G | 11 | 100 | 80 | 125 | 130 | 470 | 1237 | 110 | 315 | 360 | 597 | 1230 | 1190 | 400 | 340 | 18 | 20 |
| BN4 80-315A/B G | 15 | 100 | 80 | 125 | 130 | 470 | 1297 | 110 | 315 | 360 | 597 | 1230 | 1190 | 400 | 340 | 18 | 20 |
| BN4 80-315S G | 18,5 | 100 | 80 | 125 | 130 | 470 | 1301 | 110 | 315 | 360 | 646 | 1360 | 1320 | 400 | 340 | 18 | 20 |
| BN4 80-400C/B G | 18,5 | 125 | 80 | 125 | 115 | 530 | 1361 | 16 | 355 | 445 | 731 | 1250 | 840 | 480 | 430 | 24 | 205 |
| BN4 80-400B/B G | 22 | 125 | 80 | 125 | 115 | 530 | 1391 | 16 | 355 | 445 | 760 | 1250 | 840 | 480 | 430 | 24 | 205 |
| BN4 80-400A/B G | 30 | 125 | 80 | 125 | 115 | 530 | 1439 | 16 | 355 | 445 | 760 | 1250 | 840 | 480 | 430 | 24 | 205 |
| BN4 80-400S G | 37 | 125 | 80 | 125 | 115 | 530 | 1481 | 16 | 355 | 445 | 783 | 1250 | 840 | 480 | 430 | 24 | 205 |
| BN4 100-200C/A G | 3 | 125 | 100 | 125 | 130 | 470 | 1064 | 110 | 280 | 310 | 476 | 1030 | 990 | 400 | 340 | 18 | 20 |
| BN4 100-200B/A G | 4 | 125 | 100 | 125 | 130 | 470 | 1047 | 110 | 280 | 310 | 487 | 1030 | 990 | 400 | 340 | 18 | 20 |
| BN4 100-200A/A G | 5,5 | 125 | 100 | 125 | 130 | 470 | 1148 | 110 | 280 | 310 | 512 | 1030 | 990 | 400 | 340 | 18 | 20 |
| BN4 100-250B/A G | 7,5 | 125 | 100 | 140 | 130 | 470 | 1163 | 110 | 280 | 335 | 537 | 1030 | 990 | 400 | 340 | 18 | 20 |
| BN4 100-250A/A G | 11 | 125 | 100 | 140 | 130 | 470 | 1252 | 110 | 280 | 335 | 572 | 1230 | 1190 | 400 | 340 | 18 | 20 |
| BN4 100-315C/A G | 11 | 125 | 100 | 140 | 130 | 470 | 1252 | 110 | 315 | 360 | 597 | 1230 | 1190 | 400 | 340 | 18 | 20 |
| BN4 100-315B/A G | 15 | 125 | 100 | 140 | 130 | 470 | 1312 | 110 | 315 | 360 | 597 | 1230 | 1190 | 400 | 340 | 18 | 20 |
| BN4 100-315A/A G | 18,5 | 125 | 100 | 140 | 130 | 470 | 1316 | 110 | 315 | 360 | 646 | 1360 | 1320 | 400 | 340 | 18 | 20 |
| BN4 100-400C/A G | 22 | 125 | 100 | 140 | 115 | 530 | 1406 | 16 | 355 | 445 | 760 | 1250 | 840 | 480 | 430 | 24 | 205 |
| BN4 100-400B/A G | 30 | 125 | 100 | 140 | 115 | 530 | 1454 | 16 | 355 | 445 | 760 | 1250 | 840 | 480 | 430 | 24 | 205 |
| BN4 100-400A/A G | 37 | 125 | 100 | 140 | 115 | 530 | 1496 | 16 | 355 | 445 | 783 | 1250 | 840 | 480 | 430 | 24 | 205 |
| BN4 125-250E/A G | 5,5 | 150 | 125 | 140 | 130 | 470 | 1163 | 110 | 355 | 360 | 562 | 1030 | 990 | 400 | 340 | 18 | 20 |
| BN4 125-250D/A G | 7,5 | 150 | 125 | 140 | 130 | 470 | 1163 | 110 | 355 | 360 | 562 | 1030 | 990 | 400 | 340 | 18 | 20 |
| BN4 125-250C/A G | 11 | 150 | 125 | 140 | 130 | 470 | 1252 | 110 | 355 | 360 | 597 | 1230 | 1190 | 400 | 340 | 18 | 20 |
| BN4 125-250B/A G | 11 | 150 | 125 | 140 | 130 | 470 | 1252 | 110 | 355 | 360 | 597 | 1230 | 1190 | 400 | 340 | 18 | 20 |
| BN4 125-250A/A G | 15 | 150 | 125 | 140 | 130 | 470 | 1312 | 110 | 355 | 360 | 597 | 1230 | 1190 | 400 | 340 | 18 | 20 |
| BN4 125-315C/A G | 18,5 | 150 | 125 | 140 | 115 | 530 | 1376 | 16 | 355 | 445 | 731 | 1250 | 840 | 480 | 430 | 24 | 205 |
| BN4 125-315B/A G | 22 | 150 | 125 | 140 | 115 | 530 | 1406 | 16 | 355 | 445 | 760 | 1250 | 840 | 480 | 430 | 24 | 205 |
| BN4 125-315A/A G | 30 | 150 | 125 | 140 | 115 | 530 | 1454 | 16 | 355 | 445 | 760 | 1250 | 840 | 480 | 430 | 24 | 205 |
| BN4 125-400C/A G | 37 | 150 | 125 | 140 | 115 | 530 | 1496 | 16 | 400 | 480 | 818 | 1250 | 840 | 480 | 430 | 24 | 205 |
| BN4 125-400B/A G | 45 | 150 | 125 | 140 | 115 | 530 | 1556 | 16 | 400 | 480 | 818 | 1250 | 840 | 480 | 430 | 24 | 205 |
| BN4 125-400A/A G | 55 | 150 | 125 | 140 | 115 | 530 | 1595 | 17.5 | 400 | 540 | 950 | 1400 | 940 | 510 | 450 | 24 | 230 |
| BN4 150-315D/B G | 18,5 | 200 | 150 | 160 | 115 | 530 | 1396 | 16 | 400 | 445 | 731 | 1250 | 840 | 480 | 430 | 24 | 205 |
| BN4 150-315C/B G | 22 | 200 | 150 | 160 | 115 | 530 | 1426 | 16 | 400 | 445 | 760 | 1250 | 840 | 480 | 430 | 24 | 205 |
| BN4 150-315B/B G | 30 | 200 | 150 | 160 | 115 | 530 | 1474 | 16 | 400 | 445 | 760 | 1250 | 840 | 480 | 430 | 24 | 205 |
| BN4 150-315A/B G | 37 | 200 | 150 | 160 | 115 | 530 | 1516 | 16 | 400 | 445 | 783 | 1250 | 840 | 480 | 430 | 24 | 205 |
| BN4 150-315S G | 45 | 200 | 150 | 160 | 115 | 530 | 1576 | 16 | 400 | 445 | 783 | 1250 | 840 | 480 | 430 | 24 | 205 |
| BN4 150-400B/B G | 55 | 200 | 150 | 160 | 115 | 530 | 1615 | 17.5 | 450 | 540 | 950 | 1400 | 940 | 510 | 450 | 24 | 230 |
| BN4 150-400A/B G | 75 | 200 | 150 | 160 | 115 | 530 | 1688 | 17.5 | 450 | 540 | 973 | 1400 | 940 | 510 | 450 | 24 | 230 |
| BN4 150-400S G | 90 | 200 | 150 | 160 | 115 | 530 | 1798 | 17.5 | 450 | 540 | 973 | 1400 | 940 | 510 | 450 | 24 | 230 |

ed. 09/2025

# NR, NRS

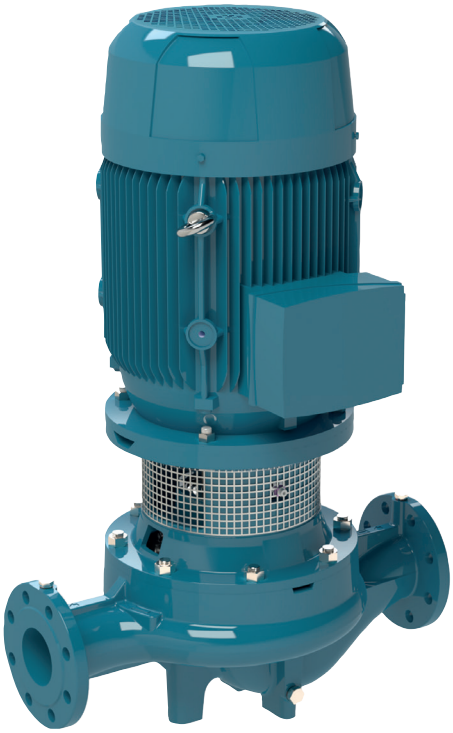

## In-line pumps

# NR, NRS

## Coverage chart

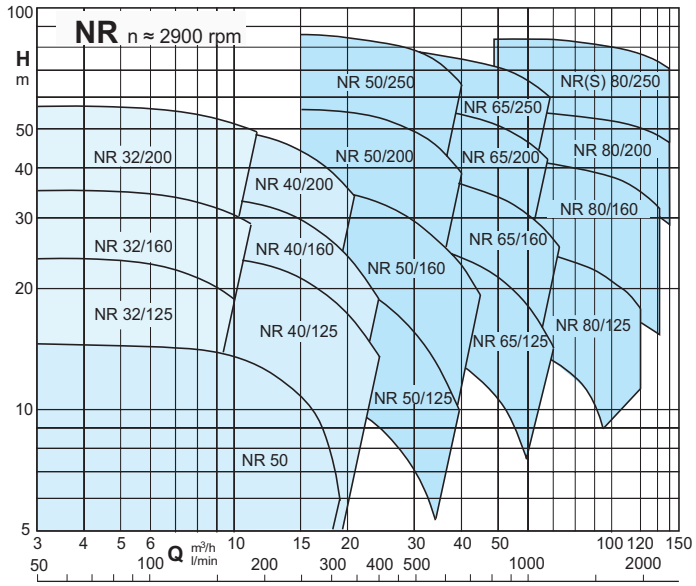


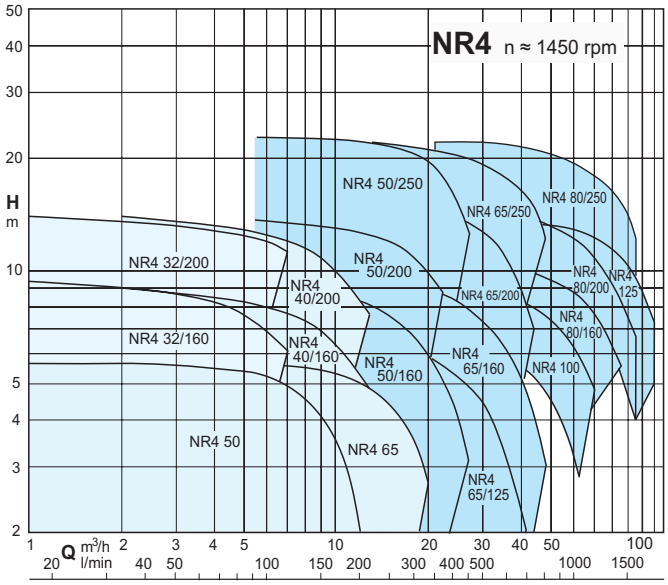


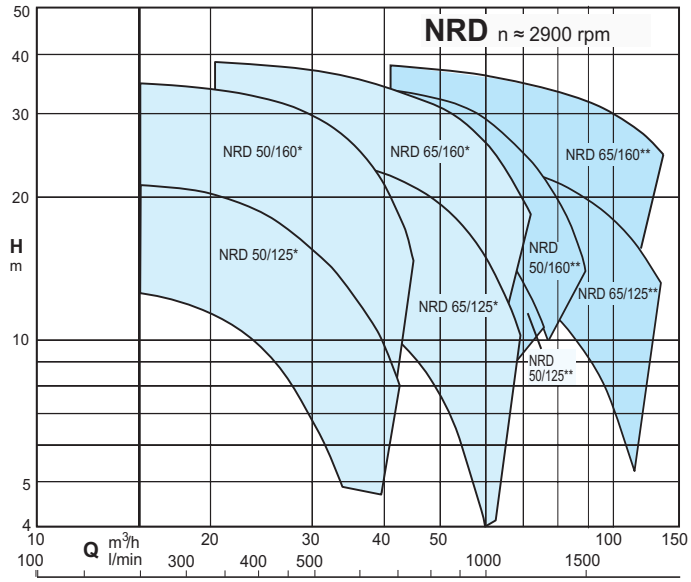


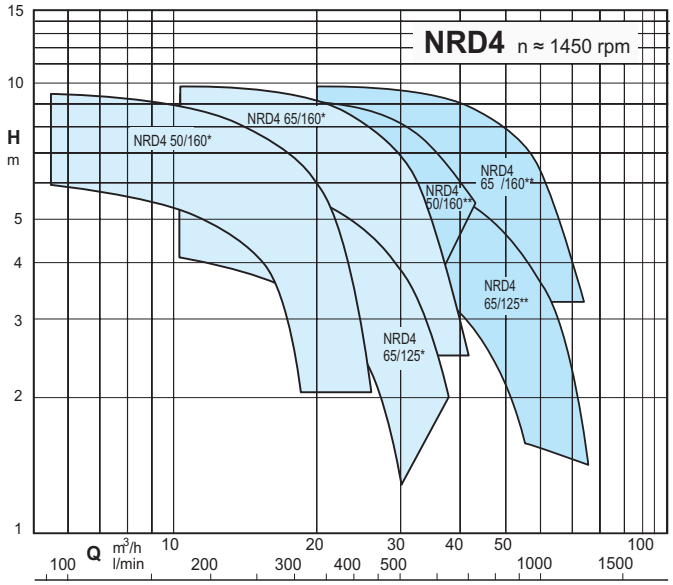


* Single operation
** Parallel operation

# NR, NRS

## Construction

NR, NR4 Close-coupled, single-impeller, centrifugal pumps; electricmotor with extended shaft directly connected to the pump.

NRS Close-coupled centrifugal pumps, new bracket construction for standard motors (stub-shaft construction) with integrated thrust bearing.

NR, NR4 series: Single head electropumps.
NRD, NRD4: Twin head pump with built-in automatic switching valve. The two head can operate singularly or in parallel.
Pump casing with suction and delivery connections with the same diameter and on the same axis (in-line).

**Connections:** Flanges according to PN 10-16, EN 1092-2.

**Counter-flanges** on request.

| Sizes | Flanges |
|---|---|
| NR,NR4 32,40,50,65,80<br>NRD, NRD4 50,65 | Screwed flanges EN 1092-1, PN 16 |
| NR 80<br>NR4 100, NR4 125 | Flanges for welding EN 1092-1, PN 10<br>EN 1092-1, PN 10-16 |

**Version with frequency converter (on request)**

## Applications

For clean liquids without abrasives, which are non-aggressive for the pump materials ( solids content up to 0.2%).
For heating, air-conditioning, cooling and circulation plants.
For civil and industrial applications.
When low noise operation is required (n ≈ 1450 rpm).

## Operating conditions

Liquid temperature from -10 °C to +90 °C.
Ambient temperature up to 40° C.
Total suction lift up to 7 m.
Maximum permissible working pressure up to 10 bar.
Continuous duty (S3 60% for single-phase pump to 1,5 kW).

## Motor

2-pole induction motor, 50 Hz (n ≈ 2900 rpm).
NR(D), NRS: three-phase 230/400 V ± 10% up to 3 kW;
400/690 V ± 10% from 4 to 37 kW;
NRM:single-phase 230 V ± 10%.

4-pole induction motor, 50 Hz (n ≈ 1450 rpm).
NR4: three-phase 230/400 V ± 10% up to 3 kW;
400/690 V ± 10% from 4 to 5,5 kW.

Insulation class F.
Protection IP 54.
Motor suitable for operation with frequency converter from 0,37 kW for NR4 and from 1,1 kW for NR(D).
IE2 efficiency class for single-phase motors up to 1,1 kW.
IE3 efficiency class for three-phase motors (IE2 up to 0,65 kW).
Constructed in accordance with: EN 60034-1; EN 60034-30-1.
EN 60335-1, EN 60335-2-41.

## Special features on request

Other voltages.
Impeller in chrome-nickel stainless steel AISI 316. (from NR. 40.. to NR. 80..)
Frequency 60 Hz (as per 60 Hz data sheet).
Protection IP 55.
Special mechanical seal
Higher or lower liquid or ambient temperatures.
Motor suitable for operation with frequency converter up to 0,33 kW for NR(D)4 and up to 0,75 kW for NR(D).

## Designation

**Example:** NR(D)(S)(4)(M) EI 50/125A/A
**NR** = Series
**D** = Twin head
S = Series Version Stub-Shaft
**4** = = 4-pole version (without indication, 2-pole version)
M = Single-phase version (no indication: three-phase)
**EI** = With frequency converter I-MAT
**50** = Delivery port diameter in mm
**125** = Nominal impeller diameter
**A** = Impeller diameter
**/A** = It refers to a revision

**The electropumps comply with the European Regulation no. 547/2012.**

## Materials

| **Components** | **Materials** |
|---|---|
| Pump casing | Cast iron GJL 200 EN 1561 |
| Lantern bracket | Cast iron GJL 200 EN 1561 |
| Impeller | Cast iron GJL 200 EN 1561 (Brass CW617N EN 12165 for NR-NR4 32..., 40..., 50/200) |
| Shaft | Chrome-nickel steel 1.4305 EN 10088 (AISI 303) |
| | Steel 1.4104 EN 10088 AISI 430F (NR 32/12, NR, NR4 50) |
| Valve | Chrome-nickel steel AISI 304 - NBR |
| Mechanical seal | Carbon - Ceramic - NBR |
| Counter-flanges | Steel 1.0044 EN 10025-2 (Fe 430B) |

# NR, NRS

## EI: Pumps with frequency converter

The NR(D) EI, NR4 EI, pumps are available with power from 0,25 kW up to 22 kW, the pumps are equipped with I-MAT installed on board.
This design enables the creation of a highly compact and efficient variable-speed system, making them ideal for water supply applications and the distribution of hot and cold water.
The pump is fitted with transducers optimized for operation and is pre-programmed at the factory for seamless performance.

## Features

- Energy saving
- Compact design
- Easy to use
- Programmable to suit the system requirements
- Reliability

## Standard execution

- The system consists of:
- Pump
- Induction motor (2 for NRD, NRD4)
- I-MAT Frequency converter (2 for NRD, NRD4)
- Motor adapter for the motor mounting of the frequency converter (2 for NRD, NRD4)
- Connection cable between frequency converter and induction motor
- Single pressure transducer for 2 poles and differential transducer for 4 poles
- - Communication cable for cascade mode for NRD, NRD4
- - 2 Cascade mode expansion board for NRD, NRD4

## Main features

Rated motor power output from 0,25 kW to 22 kW.
Control range from 1750 rpm (4-pole) to 2900 rpm (2-pole)
Control range from 870 to 1450 rpm (4-pole)
Protection against dry running
Protection against operations with closed valve ports
Protection against  system leakages
Protection against overcurrent in the motor
Protection agains overvoltage and undervoltage of the power supply
Protection against current unbalances between phases

## Operating modes

**Constant pressure mode**
with pressure transducer
In this mode, the system maintains the preset pressure regardless of changes in the flow demand of the installation.

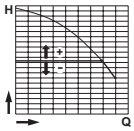


**Proportional pressure mode**
with pressure transducer
In this mode the system changes the working pressure according to the required flow rate.

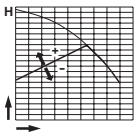


**Constant flow mode**
with flow meter
In this mode, the system maintains a constant flow rate at a specific point in the installation, adjusted according to the required pressure.

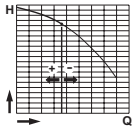


**Fixed speed mode**
with setting of the speed preferential rotation.
In this mode, by changing the working frequency, you may choose any operational curve included within the working range.

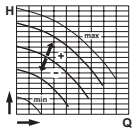


**Constant temperature mode**
with temperature transducer
In this mode the system keeps the temperature constant inside a system by changing the speed of the pump.

# NR, NRS

calpeda

## Coverage chart n ≈ 2900 rpm

### Three-phase

| | | | | | Q = Flow | | | | | | | | | | | | |
|---|---|---|---|---|---|---|---|---|---|---|---|---|---|---|---|---|---|
| | | | | | m³/h | 0 | 6 | 6,6 | 7,5 | 8,4 | 9,6 | 10,8 | 12 | 13,2 | 15 | 16,8 | 18,9 |
| Model | 230V | 400V | P2 | | l/min | | 100 | 110 | 125 | 140 | 160 | 180 | 200 | 220 | 250 | 280 | 315 |
| | A | | kW | HP | H (m) = Total head | | | | | | | | | | | | |
| NR 50D/A | 2,3 | 1,3 | 0,45 | 0,6 | | 11,6 | 11 | 10,8 | 10,5 | 10,2 | 9,5 | 8,5 | 7 | 6 | - | - | - |
| NR 50C/B | 3,7 | 2,2 | 0,75 | 1 | | 16,2 | 16 | 15,9 | 15,8 | 15,7 | 15,3 | 14,6 | 14 | 13 | 11 | 9 | 5,5 |

### Single-phase

| | | | | | Q = Flow | | | | | | | | | | | | |
|---|---|---|---|---|---|---|---|---|---|---|---|---|---|---|---|---|---|
| | | | | | m³/h | 0 | 6 | 6,6 | 7,5 | 8,4 | 9,6 | 10,8 | 12 | 13,2 | 15 | 16,8 | 18,9 |
| Model | 230V | P2 | | P1 | l/min | | 100 | 110 | 125 | 140 | 160 | 180 | 200 | 220 | 250 | 280 | 315 |
| | A | kW | HP | kW | H (m) = Total head | | | | | | | | | | | | |
| NRM 50D/A | 3,6 | 0,45 | 0,6 | 0,67 | | 11,6 | 11 | 10,8 | 10,5 | 10,2 | 9,5 | 8,5 | 7 | 6 | - | - | - |
| NRM 50C/A | 5,7 | 0,75 | 1 | 0 | | 16,2 | 16 | 15,9 | 15,8 | 15,7 | 15,3 | 14,6 | 14 | 13 | 11 | 9 | 5,5 |

### Three-phase

| | | | | | | Q = Flow | | | | | | | | | | | | | | | |
|---|---|---|---|---|---|---|---|---|---|---|---|---|---|---|---|---|---|---|---|---|---|
| | | | | | | m³/h | 0 | 2,4 | 3 | 3,6 | 4,8 | 6 | 6,6 | 7,5 | 8,4 | 9,6 | 10,8 | 12 | 13,2 | 15 | 16,8 |
| Model | 230V | 400V | 690V | P2 | | l/min | | 40 | 50 | 60 | 80 | 100 | 110 | 125 | 140 | 160 | 180 | 200 | 220 | 250 | 280 |
| | A | | | kW | HP | H (m) = Total head | | | | | | | | | | | | | | | |
| NR 32/125B | 3 | 1,7 | - | 0,55 | 0,75 | | 18,3 | 18,4 | 18,3 | 18,1 | 17,5 | 16,7 | 16,3 | 15,7 | 15 | - | - | - | - | - | - |
| NR 32/125A | 3,7 | 2,2 | - | 0,75 | 1 | | 23,3 | 23,3 | 23,2 | 23,1 | 22,6 | 21,9 | 21,5 | 20,8 | 20,1 | 19,1 | - | - | - | - | - |
| NR 32/160B/A | 4,6 | 2,7 | - | 1,1 | 1,5 | | 28,1 | 27,9 | 27,6 | 27,3 | 26,5 | 25,6 | 25,1 | 24,3 | 23,4 | 21,9 | 20 | - | - | - | - |
| NR 32/160A/A | 7,5 | 4,3 | - | 1,5 | 2 | | 36,8 | 36,3 | 36,1 | 35,7 | 35 | 34,3 | 33,8 | 33,2 | 32,4 | 31,2 | 29,7 | - | - | - | - |
| NR 32/200B/A | 9,2 | 5,3 | - | 2,2 | 3 | | 42,5 | - | 41,6 | 41,3 | 40,6 | 39,8 | 39,3 | 38,5 | 37,7 | 36,5 | 35,1 | 33,4 | - | - | - |
| NR 32/200A | 11,5 | 6,6 | - | 3 | 4 | | 51,2 | - | 49,7 | 49,5 | 48,9 | 48,2 | 47,9 | 47,2 | 46,5 | 45,4 | 44,2 | 42,8 | 41,2 | 37,9 | - |
| NR 32/200S/A | - | 9,6 | 5,5 | 4 | 5,5 | | 58 | - | 57,4 | 57,2 | 56,7 | 56,1 | 55,8 | 55,1 | 54,4 | 53,3 | 52 | 50,5 | 48,8 | 45,9 | 42,6 |

### Single-phase

| | | | | | | Q = Flow | | | | | | | | | | |
|---|---|---|---|---|---|---|---|---|---|---|---|---|---|---|---|---|
| | | | | | m³/h | 0 | 2,4 | 3 | 3,6 | 4,8 | 6 | 6,6 | 7,5 | 8,4 | 9,6 | 10,8 |
| Model | 230V | P2 | | P1 | l/min | | 40 | 50 | 60 | 80 | 100 | 110 | 125 | 140 | 160 | 180 |
| | A | kW | HP | kW | H (m) = Total head | | | | | | | | | | | |
| NRM 32/125B | 4,2 | 0,55 | 0,75 | 0 | | 18,3 | 18,4 | 18,3 | 18,1 | 17,5 | 16,7 | 16,3 | 15,7 | 15 | - | - |
| NRM 32/125A | 5,4 | 0,75 | 1 | 0 | | 23,3 | 23,3 | 23,2 | 23,1 | 22,6 | 21,9 | 21,5 | 20,8 | 20,1 | 19,1 | - |
| NRM 32/160B | 7,4 | 1,1 | 1,5 | 1,6 | | 38,2 | 27,9 | 27,6 | 27,3 | 26,5 | 25,6 | 25,1 | 24,3 | 23,4 | 21,9 | 20 |
| NRM 32/160A | 9,2 | 1,5 | 2 | 2 | | 36,8 | 36,3 | 36,1 | 35,7 | 35 | 34,3 | 33,8 | 33,2 | 32,4 | 31,2 | 29,7 |

### Three-phase

| | | | | | | Q = Flow | | | | | | | | | | | | | |
|---|---|---|---|---|---|---|---|---|---|---|---|---|---|---|---|---|---|---|---|
| | | | | | | m³/h | 0 | 6,6 | 7,5 | 8,4 | 9,6 | 10,8 | 12 | 13,2 | 15 | 16,8 | 18,9 | 21 | 24 |
| Model | 230V | 400V | 690V | P2 | | l/min | | 110 | 125 | 140 | 160 | 180 | 200 | 220 | 250 | 280 | 315 | 350 | 400 |
| | A | | | kW | HP | H (m) = Total head | | | | | | | | | | | | | |
| NR 40/125C | 4 | 2,3 | - | 0,75 | 1 | | 15,5 | 15,7 | 15,5 | 15,3 | 14,8 | 14,3 | 13,6 | 12,9 | 11,6 | 10,2 | 8,1 | 5,8 | - |
| NR 40/125B/A | 4,6 | 2,7 | - | 1,1 | 1,5 | | 19,5 | 19,8 | 19,6 | 19,4 | 19 | 18,5 | 18 | 17,5 | 16,5 | 15,2 | 13,6 | 11,6 | 8,5 |
| NR 40/125A/A | 7,5 | 4,3 | - | 1,5 | 2 | | 23,3 | 23,7 | 23,7 | 23,6 | 23,4 | 23,1 | 22,8 | 22,4 | 21,7 | 20,6 | 19,1 | 17,3 | 14,2 |
| NR 40/160B/A | 7,5 | 4,3 | - | 1,5 | 2 | | 26,1 | 25,7 | 25,4 | 25,1 | 24,6 | 24 | 23,3 | 22,6 | 21,4 | 19,7 | 17,3 | 14,4 | 9,9 |
| NR 40/160A/A | 9,2 | 5,3 | - | 2,2 | 3 | | 33,6 | 32,9 | 32,6 | 32,3 | 31,8 | 31,3 | 30,6 | 29,9 | 28,7 | 27,2 | 25,2 | 23,1 | 19,4 |
| NR 40/200B | 11,5 | 6,6 | - | 3 | 4 | | 41,9 | 40,2 | 39,7 | 39,2 | 38,5 | 37,6 | 36,7 | 35,7 | 33,8 | 31 | 26,9 | 22 | - |
| NR 40/200A/A | - | 9,6 | 5,5 | 4 | 5,5 | | 52,4 | 49,6 | 49,1 | 48,5 | 47,6 | 46,7 | 45,7 | 44,7 | 43 | 41,2 | 38,6 | 34,8 | - |

### Single-phase

| | | | | | | Q = Flow | | | | | | | | | | | | |
|---|---|---|---|---|---|---|---|---|---|---|---|---|---|---|---|---|---|---|
| | | | | | m³/h | 0 | 6,6 | 7,5 | 8,4 | 9,6 | 10,8 | 12 | 13,2 | 15 | 16,8 | 18,9 | 21 | 24 |
| Model | 230V | P2 | | P1 | l/min | | 110 | 125 | 140 | 160 | 180 | 200 | 220 | 250 | 280 | 315 | 350 | 400 |
| | A | kW | HP | kW | H (m) = Total head | | | | | | | | | | | | | |
| NRM 40/125C | 5,8 | 0,75 | 1 | 1,01 | | 15,5 | 15,7 | 15,5 | 15,3 | 14,8 | 14,3 | 13,6 | 12,9 | 11,6 | 10,2 | 8,1 | 5,8 | - |
| NRM 40/125B | 7,4 | 1,1 | 1,5 | 1,44 | | 19,5 | 19,8 | 19,6 | 19,4 | 19 | 18,5 | 18 | 17,5 | 16,5 | 15,2 | 13,6 | 11,6 | 8,5 |
| NRM 40/125A | 9,2 | 1,5 | 2 | 2 | | 23,3 | 23,7 | 23,7 | 23,6 | 23,4 | 23,1 | 22,8 | 22,4 | 21,7 | 20,6 | 19,1 | 17,3 | 14,2 |
| NRM 40/160B | 9,2 | 1,5 | 2 | 2 | | 26,1 | 25,7 | 25,4 | 25,1 | 24,6 | 24 | 23,3 | 22,6 | 21,4 | 19,7 | 17,3 | 14,4 | 9,9 |

# NR, NRS

calpeda®

## Coverage chart n ≈ 2900 rpm

### Three-phase

| | | | | | | Q = Flow | | | | | | | | | | | | | |
|---|---|---|---|---|---|---|---|---|---|---|---|---|---|---|---|---|---|---|---|
| | | | | | | m³/h | 0 | 15 | 16,8 | 18,9 | 21 | 24 | 27 | 30 | 33 | 37,8 | 39 | 42 | 45 |
| Model | 230V | 400V | 690V | P2 | | l/min | | 250 | 280 | 315 | 350 | 400 | 450 | 500 | 550 | 630 | 650 | 700 | 750 |
| | A | | | kW | HP | H (m) = Total head | | | | | | | | | | | | | |
| NR 50/125F/A | 4,6 | 2,7 | - | 1,1 | 1,5 | | 14,9 | 13,8 | 13,4 | 12,8 | 12,1 | 11 | 9,9 | 8,4 | 6,9 | - | - | - | - |
| NR 50/125C/A | 7,5 | 4,3 | - | 1,5 | 2 | | 17,7 | 17,4 | 17 | 16,5 | 16 | 15 | 13,9 | 12,6 | 11,3 | 9 | 8,3 | - | - |
| NR 50/125A/B | 9,2 | 5,3 | - | 2,2 | 3 | | 22,2 | 21,7 | 21,4 | 21 | 20,6 | 19,8 | 18,8 | 17,5 | 16,3 | 14,1 | 13,5 | 12 | - |
| NR 50/160C/B | 9,2 | 5,3 | - | 2,2 | 3 | | 23,1 | 21,9 | 21,4 | 20,6 | 19,9 | 18,6 | 17,3 | 15,6 | 13,8 | 10,8 | 10 | - | - |
| NR 50/160B/A | 11,5 | 6,6 | - | 3 | 4 | | 28,6 | 27,9 | 27,4 | 26,7 | 26 | 24,6 | 23,1 | 21,3 | 19,7 | 16,6 | 15,7 | 13,6 | - |
| NR 50/160A/B | - | 9,6 | 5,5 | 4 | 5,5 | | 36,6 | 35,5 | 35,1 | 34,5 | 33,7 | 32,7 | 31,2 | 29,4 | 27,5 | 24,3 | 23,4 | 21,3 | 19,1 |
| NR 50/200D/B | - | 9,6 | 5,5 | 4 | 5,5 | | 41,8 | 37,8 | 36,8 | 35,7 | 34,5 | 32,4 | 30,1 | 27,6 | 24,9 | - | - | - | - |
| NR 50/200B/A | - | 10,8 | 6,2 | 5,5 | 7,5 | | 50,9 | 48,5 | 47,7 | 46,8 | 45,7 | 43,9 | 41,7 | 39,2 | 36,5 | - | - | - | - |
| NR 50/200A/A | - | 14,3 | 8,3 | 7,5 | 10 | | 56,7 | 54,9 | 54,3 | 53,4 | 52,4 | 50,7 | 48,9 | 46,5 | 44,1 | 39,7 | 38,8 | - | - |
| NR 50/250C/B | - | 18,5 | 10,7 | 9,2 | 12,5 | | 61,2 | 58,8 | 58 | 57,3 | 56,5 | 55 | 53,2 | 51,1 | 48,9 | 44,8 | 43,1 | 39,4 | - |
| NR 50/250B/A | - | 21,5 | 12,4 | 11 | 15 | | 69,4 | 67 | 66,4 | 65,5 | 64,8 | 63,2 | 61,5 | 59,6 | 57,7 | 53,8 | 52,6 | 50 | - |
| NR 50/250A/B | - | 27,3 | 15,8 | 15 | 20 | | 87 | 84,6 | 84,1 | 83,2 | 82,3 | 80,7 | 78,8 | 76,9 | 74,3 | 69,8 | 68,4 | 65,2 | - |

### Single-phase

| | | | | | | Q = Flow | | | | | | | | | | |
|---|---|---|---|---|---|---|---|---|---|---|---|---|---|---|---|---|
| | | | | | m³/h | 0 | 15 | 16,8 | 18,9 | 21 | 24 | 27 | 30 | 33 | 37,8 | 39 |
| Model | 230V | P2 | | P1 | l/min | | 250 | 280 | 315 | 350 | 400 | 450 | 500 | 550 | 630 | 650 |
| | A | kW | HP | kW | H (m) = Total head | | | | | | | | | | | |
| NRM 50/125F | 7,4 | 1,1 | 1,5 | 1,6 | | 14,9 | 13,8 | 13,4 | 12,8 | 12,1 | 11 | 9,9 | 8,4 | 6,9 | - | - |
| NRM 50/125C | 9,2 | 1,5 | 2 | 2 | | 17,7 | 17,4 | 17 | 16,5 | 16 | 15 | 13,9 | 12,6 | 11,3 | 9 | 8,3 |

### Three-phase

| | | | | | | Q = Flow | | | | | | | | | | | | | |
|---|---|---|---|---|---|---|---|---|---|---|---|---|---|---|---|---|---|---|---|
| | | | | | | m³/h | 0 | 21 | 24 | 27 | 30 | 33 | 37,8 | 42 | 48 | 54 | 60 | 66 | 69 | 72 |
| Model | 230V | 400V | 690V | P2 | | l/min | | 350 | 400 | 450 | 500 | 550 | 630 | 700 | 800 | 900 | 1000 | 1100 | 1150 | 1200 |
| | A | | | kW | HP | H (m) = Total head | | | | | | | | | | | | | |
| NR 65/125F/B | 9,2 | 5,3 | - | 2,2 | 3 | | 16,5 | 16 | 15,7 | 15,3 | 14,8 | 14,3 | 13,5 | 12,5 | 11,1 | 9,5 | 7,3 | 5,3 | - | - |
| NR 65/125D/A | 11,5 | 6,6 | - | 3 | 4 | | 21,1 | 20,2 | 19,9 | 19,6 | 19,2 | 18,7 | 17,9 | 16,9 | 15,2 | 13,3 | 11,3 | 9,1 | - | - |
| NR 65/125A/B | - | 9,6 | 5,5 | 4 | 5,5 | | 25 | 24,4 | 24,1 | 23,8 | 23,4 | 23 | 22,2 | 21,4 | 19,8 | 18 | 15,9 | 13,7 | 12,4 | - |
| NR 65/125S/B | - | 9,6 | 5,5 | 4 | 5,5 | | 27,2 | 26,3 | 26 | 25,7 | 25,4 | 25 | 24,3 | 23,6 | 22,1 | 20,3 | 18,3 | 16,1 | 14,7 | - |
| NR 65/160B/A | - | 10,8 | 6,2 | 5,5 | 7,5 | | 31,9 | 32 | 31,7 | 31,4 | 30,9 | 30,4 | 29,5 | 28,6 | 26,8 | 24,8 | 22,2 | 19,7 | 18,3 | 16,7 |
| NR 65/160A/A | - | 14,3 | 8,3 | 7,5 | 10 | | 39 | 39,3 | 39 | 38,7 | 38,3 | 37,9 | 36,9 | 36,1 | 34,7 | 32,9 | 30,6 | 28,1 | 26,7 | 25,3 |
| NR 65/200B/B | - | 18,5 | 10,7 | 9,2 | 12,5 | | 47,1 | 46,7 | 45,9 | 45,1 | 44,4 | 43,6 | 42 | 40,5 | 37,9 | 35,3 | 32,4 | 28,3 | - | - |
| NR 65/200A/A | - | 21,5 | 12,4 | 11 | 15 | | 54,2 | 53,3 | 52,8 | 52,3 | 51,5 | 50,7 | 49,2 | 47,5 | 45,1 | 41,9 | 38,1 | 34,5 | - | - |
| NR 65/200S/B | - | 27,3 | 15,8 | 15 | 20 | | 60,4 | 60,5 | 60,2 | 59,6 | 59 | 58 | 56,3 | 54,5 | 52,2 | 49,5 | 46,5 | 42,7 | - | - |
| NR 65/250C/A | - | 21,5 | 12,4 | 11 | 15 | | 54,6 | 54,8 | 54,2 | 53,5 | 52,8 | 52 | 50,5 | 48,9 | 46,3 | 43,5 | 40,6 | 37,3 | - | - |
| NR 65/250B/B | - | 27,3 | 15,8 | 15 | 20 | | 67,1 | 67,2 | 66,7 | 66 | 65,1 | 64,3 | 62,8 | 61,3 | 58,6 | 55,8 | 52,9 | 49,7 | - | - |
| NR 65/250A/C | - | 34 | 19,6 | 18,5 | 25 | | 78,5 | 78,5 | 77,8 | 77,3 | 76,7 | 76 | 74,8 | 73,6 | 71,1 | 68,4 | 65,5 | 62,2 | - | - |

**P1:** Maximum power input.
**P2:** Rated motor power output.
Tolerances according to UNI EN ISO 9906:2012

# NR, NRS

## Coverage chart n ≈ 2900 rpm

### Three-phase

| | | | | | Q = Flow | | | | | | | | | | | | | | |
|---|---|---|---|---|---|---|---|---|---|---|---|---|---|---|---|---|---|---|---|
| | | | | | m³/h | 0 | 37,8 | 42 | 48 | 54 | 60 | 66 | 75 | 84 | 96 | 108 | 120 | 132 | 141 |
| Model | 400V | 690V | P2 | | l/min | | 630 | 700 | 800 | 900 | 1000 | 1100 | 1250 | 1400 | 1600 | 1800 | 2000 | 2200 | 2350 |
| | A | | kW | HP | H (m) = Total head | | | | | | | | | | | | | | |
| NR 80/125E | 9,6 | 5,5 | 4 | 5,5 | | 18,9 | 16,8 | 16,5 | 16,1 | 15,7 | 15,3 | 14,8 | 14 | 13,1 | 11,5 | 9,2 | - | - | - |
| NR 80/125C | 10,8 | 6,2 | 5,5 | 7,5 | | 21,6 | 20,5 | 20,3 | 20 | 19,7 | 19,3 | 18,9 | 18,3 | 17,4 | 15,9 | 13,9 | 11 | - | - |
| NR 80/125A | 14,3 | 8,3 | 7,5 | 10 | | 27 | 25,8 | 25,7 | 25,5 | 25,3 | 25 | 24,8 | 24,2 | 23,4 | 22,1 | 20,2 | 17,7 | - | - |
| NR 80/160D | 14,3 | 8,3 | 7,5 | 10 | | 25,2 | - | - | 24,8 | 24,5 | 24,1 | 23,8 | 23,3 | 22,6 | 21,3 | 19,1 | 16,1 | - | - |
| NR 80/160C | 18,5 | 10,7 | 9,2 | 12,5 | | 28,1 | - | - | 28,2 | 28,1 | 27,9 | 27,7 | 27,3 | 26,6 | 25,3 | 23,2 | 20,5 | 17 | - |
| NR 80/160B | 21,5 | 12,5 | 11 | 15 | | 32,4 | - | - | 32,8 | 32,7 | 32,5 | 32,2 | 31,8 | 31,1 | 29,9 | 28 | 25,5 | 22,4 | - |
| NR 80/160AR | 27,7 | 16 | 15 | 20 | | 36,2 | - | - | 36,7 | 36,5 | 36,3 | 36 | 35,7 | 35,3 | 34,5 | 32,9 | 30,5 | 27,8 | - |
| NR 80/160A | 27,7 | 16 | 15 | 20 | | 40,3 | - | - | 41,4 | 41,2 | 40,9 | 40,7 | 40,3 | 39,9 | 39,1 | 37,8 | 35,7 | 33,1 | - |
| NR 80/200C | 27,7 | 16 | 15 | 20 | | 41,1 | - | - | 42,8 | 42,7 | 42,5 | 42,2 | 41,5 | 40,5 | 38,7 | 36,4 | 33,7 | 30,7 | 28,2 |
| NR 80/200B | 34 | 19,6 | 18,5 | 25 | | 47,6 | - | - | 48,9 | 48,8 | 48,6 | 48,3 | 47,7 | 46,8 | 45,1 | 43 | 40,5 | 37,6 | 35,2 |
| NR 80/200A | 41 | 23,7 | 22 | 30 | | 55,2 | - | - | 56,7 | 56,7 | 56,6 | 56,5 | 56,1 | 55,5 | 54,3 | 52,6 | 50,4 | 47,7 | 45,4 |
| NR 80/250C | 41 | 23,7 | 22 | 30 | | 53,8 | - | - | 55,4 | 55,2 | 54,9 | 54,5 | 53,7 | 52,7 | 51 | 48,5 | 45 | 40,6 | 36,9 |
| NRS 80/250B | - | - | 30 | 40 | | 66,6 | - | - | 70,6 | 70,7 | 70,7 | 70,4 | 69,8 | 68,7 | 66,8 | 64,3 | 61,3 | 58 | 55,2 |
| NRS 80/250A | - | - | 37 | 50 | | 78,9 | - | - | 83,9 | 84,1 | 84,1 | 84 | 83,5 | 82,7 | 81 | 78,8 | 76,2 | 73,4 | 71,5 |

**P1:** Maximum power input.
**P2:** Rated motor power output.
Tolerances according to UNI EN ISO 9906:2012

## Rated current

| Motor | IE3 | | | IE4 | | |
|---|---|---|---|---|---|---|
| P2 | 400V | 690V | | 400V | 690V | |
| kW | A | A | Ia/In: | A | A | Ia/In: |
| 30 | 53 | 30.5 | 8.6 | 51.5 | 29.9 | 9 |
| 37 | 65 | 37.5 | 7.1 | 63.3 | 36.7 | 9 |

**A*:** Calpeda motor Standard
**Ia/In** D.O.L. starting current / Nominal current

# NR, NRS

calpeda

## Performance n ≈ 1450 rpm

### Three-phase

| | | | | | Q = Flow | | | | | | | | | | | |
|---|---|---|---|---|---|---|---|---|---|---|---|---|---|---|---|---|
| | | | | | m³/h | 0 | 2 | 4 | 6 | 8 | 10 | 12 | 14 | 16 | 18 | 20 |
| Model | 230V | 400V | P2 | | l/min | | 33,3 | 66,6 | 100 | 133 | 167 | 200 | 233 | 267 | 300 | 333 |
| | A | | kW | HP | H (m) = Total head | | | | | | | | | | | |
| NR4 50C/A | 1,3 | 0,75 | 0,25 | 0,34 | | 3,9 | 3,9 | 3,8 | 3,3 | 2,5 | - | - | - | - | - | - |
| NR4 50B/A | 1,3 | 0,75 | 0,25 | 0,34 | | 4,7 | 4,7 | 4,6 | 4,3 | 3,5 | 2,3 | - | - | - | - | - |
| NR4 50A/A | 1,3 | 0,75 | 0,25 | 0,34 | | 5,6 | 5,6 | 5,5 | 5,2 | 4,5 | 3,5 | 2 | - | - | - | - |
| NR4 65C/A | 1,3 | 0,75 | 0,25 | 0,34 | | 3,8 | - | - | 3,8 | 3,7 | 3,5 | 3,1 | 2,6 | 1,9 | - | - |
| NR4 65B/A | 2,1 | 1,2 | 0,33 | 0,45 | | 4,7 | - | - | 4,7 | 4,6 | 4,5 | 4,2 | 3,8 | 3,2 | 2,5 | - |
| NR4 65A/A | 2,1 | 1,2 | 0,33 | 0,45 | | 5,6 | - | - | 5,6 | 5,5 | 5,3 | 5 | 4,6 | 4,1 | 3,5 | 2,7 |

### Single-phase

| | | | | | Q = Flow | | | | | | | | | |
|---|---|---|---|---|---|---|---|---|---|---|---|---|---|---|
| | | | | | m³/h | 0 | 2 | 4 | 6 | 8 | 10 | 12 | 14 | 16 |
| Model | 230V | P2 | | P1 | l/min | | 33,3 | 66,6 | 100 | 133 | 167 | 200 | 233 | 267 |
| | A | kW | HP | kW | H (m) = Total head | | | | | | | | | |
| NR4M 50C/A | 2,1 | 0,25 | 0,34 | 0,27 | | 3,9 | 3,9 | 3,8 | 3,3 | 2,5 | - | - | - | - |
| NR4M 50B/A | 2,1 | 0,25 | 0,34 | 0,29 | | 4,7 | 4,7 | 4,6 | 4,3 | 3,5 | 2,3 | - | - | - |
| NR4M 50A/A | 2,1 | 0,25 | 0,34 | 0,33 | | 5,6 | 5,6 | 5,5 | 5,2 | 4,5 | 3,5 | 2 | - | - |
| NR4M 65C/A | 2,1 | 0,25 | 0,34 | 0,31 | | 3,8 | - | - | 3,8 | 3,7 | 3,5 | 3,1 | 2,6 | 1,9 |

### Three-phase

| | | | | | Q = Flow | | | | | | | | | | | | | | | | |
|---|---|---|---|---|---|---|---|---|---|---|---|---|---|---|---|---|---|---|---|---|---|
| | | | | | m³/h | 0 | 1 | 1,2 | 1,5 | 1,89 | 2,4 | 3 | 3,6 | 4,2 | 4,8 | 5,4 | 6 | 6,6 | 7,5 | 8,4 | 9,6 |
| Model | 230V | 400V | P2 | | l/min | | 16,6 | 20 | 25 | 31,5 | 40 | 50 | 60 | 70 | 80 | 90 | 100 | 110 | 125 | 140 | 160 |
| | A | | kW | HP | H (m) = Total head | | | | | | | | | | | | | | | | |
| NR4 32/160B/A | 1,65 | 0,95 | 0,37 | 0,5 | | 8,1 | 7,9 | 7,9 | 7,7 | 7,6 | 7,4 | 7,2 | 6,9 | 6,6 | 6,1 | 5,6 | 4,4 | - | - | - | - |
| NR4 32/160A/A | 1,65 | 0,95 | 0,37 | 0,5 | | 9,2 | 9,3 | 9,3 | 9,2 | 9,1 | 9 | 8,8 | 8,6 | 8,3 | 8 | 7,6 | 7,2 | 6,6 | 5,6 | - | - |
| NR4 32/200C/A | 1,65 | 0,95 | 0,37 | 0,5 | | 11,5 | 11,3 | 11,3 | 11,2 | 11,1 | 10,9 | 10,7 | 10,5 | 10,2 | 9,9 | 9,5 | 9,1 | 8,5 | 7,4 | 5,7 | - |
| NR4 32/200B/A | 2,6 | 1,5 | 0,55 | 0,75 | | 13,2 | 13,2 | 13,2 | 13,1 | 13 | 12,9 | 12,8 | 12,6 | 12,4 | 12,1 | 11,8 | 11,4 | 10,9 | 10 | 9,1 | 7,5 |
| NR4 32/200A/A | 3,3 | 1,9 | 0,75 | 1 | | 14,6 | 14,5 | 14,5 | 14,4 | 14,3 | 14,2 | 14,1 | 13,9 | 13,8 | 13,5 | 13,2 | 12,8 | 12,3 | 11,4 | 10,5 | 9,1 |

### Three-phase

| | | | | | Q = Flow | | | | | | | | | | | | | | |
|---|---|---|---|---|---|---|---|---|---|---|---|---|---|---|---|---|---|---|---|
| | | | | | m³/h | 0 | 2,4 | 3 | 3,6 | 4,8 | 5,4 | 6 | 7,5 | 8,4 | 9,6 | 10,8 | 12 | 13,2 | 15 |
| Model | 230V | 400V | P2 | | l/min | | 40 | 50 | 60 | 80 | 90 | 100 | 125 | 140 | 160 | 180 | 200 | 220 | 250 |
| | A | | kW | HP | H (m) = Total head | | | | | | | | | | | | | | |
| NR4 40/160B/A | 1,65 | 0,95 | 0,37 | 0,5 | | 7,3 | 7,3 | 7,2 | 7,1 | 6,9 | 6,8 | 6,6 | 6,1 | 5,8 | 5,2 | 4,4 | 3,5 | 2,5 | - |
| NR4 40/160A/A | 1,65 | 0,95 | 0,37 | 0,5 | | 9,1 | 9 | 9 | 9 | 8,8 | 8,7 | 8,6 | 8,1 | 7,8 | 7,2 | 6,5 | 5,7 | 4,8 | 3,3 |
| NR4 40/200B/A | 2,6 | 1,5 | 0,55 | 0,75 | | 12,9 | 12,5 | 12,4 | 12,2 | 11,9 | 11,7 | 11,4 | 10,7 | 10,2 | 9,1 | 7,7 | 6,2 | 4,4 | - |
| NR4 40/200A/A | 3,3 | 1,9 | 0,75 | 1 | | 14,7 | 14,3 | 14,2 | 14,1 | 13,9 | 13,7 | 13,5 | 12,9 | 12,4 | 11,6 | 10,5 | 9,2 | 7,7 | 4,9 |

### Three-phase

| | | | | | Q = Flow | | | | | | | | | | | | | | | | |
|---|---|---|---|---|---|---|---|---|---|---|---|---|---|---|---|---|---|---|---|---|---|
| | | | | | m³/h | 0 | 5,4 | 6 | 7,5 | 8,4 | 9,6 | 10,8 | 12 | 13,2 | 15 | 16,8 | 18,9 | 21 | 24 | 27 | 30 |
| Model | 230V | 400V | P2 | | l/min | | 90 | 100 | 125 | 140 | 160 | 180 | 200 | 220 | 250 | 280 | 315 | 350 | 400 | 450 | 500 |
| | A | | kW | HP | H (m) = Total head | | | | | | | | | | | | | | | | |
| NR4 50/160C/A | 1,65 | 0,95 | 0,37 | 0,5 | | 5,9 | 5,9 | 5,8 | 5,7 | 5,6 | 5,4 | 5,2 | 5 | 4,7 | 4,2 | 3,7 | 3,1 | 2,3 | - | - | - |
| NR4 50/160B/A | 2,6 | 1,5 | 0,55 | 0,75 | | 7,3 | 7,4 | 7,4 | 7,2 | 7,1 | 6,9 | 6,7 | 6,4 | 6,2 | 5,7 | 5,2 | 4,5 | 3,8 | 2,5 | - | - |
| NR4 50/160A/B | 3,3 | 1,9 | 0,75 | 1 | | 9,2 | 9,2 | 9,2 | 9,1 | 9 | 8,9 | 8,7 | 8,4 | 8,2 | 7,6 | 7,1 | 6,4 | 5,6 | 4,4 | 3,1 | - |
| NR4 50/200B/B | 5 | 2,9 | 1,1 | 1,5 | | 12,8 | 12,6 | 12,5 | 12,3 | 12,1 | 11,9 | 11,5 | 11,2 | 10,7 | 10 | 9,2 | 8,2 | 7,1 | 5,2 | - | - |
| NR4 50/200A/B | 5 | 2,9 | 1,1 | 1,5 | | 14,3 | 14,1 | 14 | 13,9 | 13,7 | 13,5 | 13,2 | 12,8 | 12,4 | 11,7 | 11 | 10 | 8,8 | 7,3 | - | - |
| NR4 50/250C/B | 6 | 3,5 | 1,5 | 2 | | 17,1 | 17 | 16,9 | 16,6 | 16,4 | 16,1 | 15,9 | 15,6 | 15,2 | 14,6 | 13,9 | 12,8 | 11,3 | 8,5 | 5,3 | - |
| NR4 50/250B/B | 8,6 | 5 | 2,2 | 3 | | 21 | 20,9 | 20,8 | 20,5 | 20,3 | 20 | 19,7 | 19,4 | 19 | 18,4 | 17,8 | 16,8 | 15,6 | 13,8 | 11,7 | 8,5 |
| NR4 50/250A/A | 11,1 | 6,4 | 3 | 4 | | 22 | 21,9 | 21,9 | 21,8 | 21,6 | 21,4 | 21,1 | 20,9 | 20,5 | 19,9 | 19,2 | 18,3 | 17,2 | 15,3 | 13,4 | 11 |

**P1:** Maximum power input.
**P2:** Rated motor power output.
Tolerances according to UNI EN ISO 9906:2012

# NR, NRS

## Performance n ≈ 1450 rpm

### Three-phase

| Model | 230V | 400V | 690V | P2 | | Q = Flow | | | | | | | | | | | | | | |
|---|---|---|---|---|---|---|---|---|---|---|---|---|---|---|---|---|---|---|---|---|
| | | | | | | m³/h | 0 | 10,8 | 12 | 13,2 | 15 | 16,8 | 18,9 | 21 | 24 | 27 | 30 | 33 | 42 | 48 |
| | | | | | | l/min | | 180 | 200 | 220 | 250 | 280 | 315 | 350 | 400 | 450 | 500 | 550 | 700 | 800 |
| | A | | | kW | HP | H (m) = Total head | | | | | | | | | | | | | | |
| NR4 65/125F/A | 1,65 | 0,95 | - | 0,37 | 0,5 | | 4,1 | 3,9 | 3,8 | 3,8 | 3,6 | 3,5 | 3,3 | 3 | 2,6 | 2,1 | 1,6 | 1 | - | - |
| NR4 65/125D/A | 2,6 | 1,5 | - | 0,55 | 0,75 | | 5,3 | 5 | 5 | 4,9 | 4,8 | 4,7 | 4,5 | 4,3 | 3,9 | 3,4 | 2,9 | 2,4 | - | - |
| NR4 65/125A/B | 3,3 | 1,9 | - | 0,75 | 1 | | 6,3 | 6,2 | 6,1 | 6 | 5,9 | 5,8 | 5,7 | 5,5 | 5,1 | 4,6 | 4,1 | 3,5 | 1,5 | - |
| NR4 65/125S/B | 3,3 | 1,9 | - | 0,75 | 1 | | 6,8 | 6,6 | 6,6 | 6,5 | 6,4 | 6,3 | 6,1 | 5,9 | 5,6 | 5,1 | 4,6 | 4,1 | 2,1 | - |
| NR4 65/160B/B | 5 | 2,9 | - | 1,1 | 1,5 | | 8,2 | 8,2 | 8,2 | 8,1 | 8 | 7,9 | 7,7 | 7,5 | 7,1 | 6,6 | 6 | 5,4 | 3,2 | - |
| NR4 65/160A/B | 5 | 2,9 | - | 1,1 | 1,5 | | 9,7 | 9,6 | 9,5 | 9,5 | 9,4 | 9,2 | 9 | 8,8 | 8,5 | 8 | 7,4 | 6,8 | 4,7 | 3 |
| NR4 65/200C/B | 5 | 2,9 | - | 1,1 | 1,5 | | 11,4 | 11,3 | 11,2 | 11,1 | 10,8 | 10,6 | 10,3 | 9,9 | 9,4 | 8,7 | 7,9 | 7 | 3,4 | - |
| NR4 65/200B/B | 6 | 3,5 | - | 1,5 | 2 | | 13,3 | 13,1 | 13 | 12,9 | 12,7 | 12,4 | 12,1 | 11,8 | 11,2 | 10,5 | 9,7 | 8,9 | 5,4 | - |
| NR4 65/200A/B | 8,6 | 5 | - | 2,2 | 3 | | 14,5 | 14,6 | 14,5 | 14,4 | 14,2 | 13,9 | 13,6 | 13,2 | 12,7 | 12 | 11,3 | 10,5 | 7,2 | - |
| NR4 65/250D/B | 8,6 | 5 | - | 2,2 | 3 | | 13,7 | 13,9 | 13,8 | 13,8 | 13,6 | 13,4 | 13,1 | 12,8 | 12,3 | 11,6 | 10,9 | 10,1 | 7,2 | - |
| NR4 65/250C/B | 8,6 | 5 | - | 2,2 | 3 | | 17,1 | 17,3 | 17,2 | 17,2 | 16,9 | 16,7 | 16,3 | 16 | 15,4 | 14,7 | 13,9 | 13 | 10 | - |
| NR4 65/250B/A | 11,1 | 6,4 | - | 3 | 4 | | 19,9 | 20,1 | 20 | 20 | 19,8 | 19,6 | 19,3 | 19 | 18,4 | 17,7 | 16,9 | 16,1 | 13,2 | 10,8 |
| NR4 65/250A/A | - | 8,3 | 4,8 | 4 | 5,5 | | 21,4 | 21,6 | 21,5 | 21,4 | 21,3 | 21,1 | 20,8 | 20,5 | 19,9 | 19,2 | 18,4 | 17,6 | 14,7 | 12,2 |

### Three-phase

| Model | 230V | 400V | 690V | P2 | | Q = Flow | | | | | | | | | | | | | | |
|---|---|---|---|---|---|---|---|---|---|---|---|---|---|---|---|---|---|---|---|---|
| | | | | | | m³/h | 0 | 21 | 24 | 27 | 30 | 33 | 37,8 | 42 | 48 | 54 | 60 | 66 | 75 | 84 | 96 |
| | | | | | | l/min | | 350 | 400 | 450 | 500 | 550 | 630 | 700 | 800 | 900 | 1000 | 1100 | 1250 | 1400 | 1600 |
| | A | | | kW | HP | H (m) = Total head | | | | | | | | | | | | | | |
| NR4 80/160C | 5 | 2,9 | - | 1,1 | 1,5 | | 6,7 | 6,3 | 6,2 | 6,1 | - | 6 | 5,8 | 5,7 | 5,4 | 4,8 | 4,1 | - | - | - | - |
| NR4 80/160B | 5 | 2,9 | - | 1,1 | 1,5 | | 7,4 | 7,2 | 7,2 | 7,1 | - | 7 | 6,8 | 6,7 | 6,4 | 6 | 5,2 | 4,4 | - | - | - |
| NR4 80/160A | 6 | 3,5 | - | 1,5 | 2 | | 8,8 | 8,7 | 8,7 | 8,7 | - | 8,6 | 8,5 | 8,4 | 8,1 | 7,7 | 7,1 | 6,4 | 5,2 | - | - |
| NR4 80/160S | 8,6 | 5 | - | 2,2 | 3 | | 10,2 | 10,2 | 10,2 | 10,2 | - | 10,1 | 10 | 9,9 | 9,6 | 9,3 | 8,8 | 8,2 | 7 | 5,7 | - |
| NR4 80/200B | 8,6 | 5 | - | 2,2 | 3 | | 11,4 | 11,7 | 11,7 | 11,7 | - | 11,6 | 11,4 | 11,3 | 10,9 | 10,4 | 9,8 | 9 | 7,8 | 6,3 | 3,8 |
| NR4 80/200A | 11,1 | 6,4 | - | 3 | 4 | | 13,9 | 14,2 | 14,1 | 14,1 | - | 14 | 13,9 | 13,7 | 13,4 | 13 | 12,4 | 11,7 | 10,4 | 9 | 6,7 |
| NR4 80/250B | - | 8,3 | 4,8 | 4 | 5,5 | | 16,3 | 17,4 | 17,4 | 17,4 | 17,4 | 17,3 | 17,1 | 16,8 | 16,4 | 15,7 | 14,9 | 14 | 12,4 | 10,4 | 7,4 |
| NR4 80/250A | - | 12,5 | 7,2 | 5,5 | 7,5 | | 20,3 | 21,4 | 21,4 | 21,5 | 21,4 | 21,4 | 21,3 | 21,1 | 20,7 | 20,3 | 19,6 | 18,9 | 17,5 | 15,8 | 12,9 |

### Three-phase

| Model | 230V | 400V | 690V | P2 | | Q = Flow | | | | | | | | | | | | | |
|---|---|---|---|---|---|---|---|---|---|---|---|---|---|---|---|---|---|---|---|
| | | | | | | m³/h | 0 | 20 | 25 | 30 | 35 | 40 | 50 | 60 | 70 | 80 | 90 | 100 | 110 |
| | | | | | | l/min | | 333 | 417 | 500 | 583 | 667 | 833 | 1000 | 1167 | 1333 | 1500 | 1667 | 1833 |
| | A | | | kW | HP | H (m) = Total head | | | | | | | | | | | | | |
| NR4 100C/B | 5 | 2,9 | - | 1,1 | 1,5 | | 6,6 | 6,6 | 6,4 | 6,3 | 6 | 5,6 | 4,6 | 3,3 | - | - | - | - | - |
| NR4 100B/B | 5 | 2,9 | - | 1,1 | 1,5 | | 7,5 | 7,5 | 7,4 | 7,2 | 7 | 6,6 | 5,6 | 4,4 | - | - | - | - | - |
| NR4 100A/B | 6 | 3,5 | - | 1,5 | 2 | | 9 | 9 | 8,9 | 8,8 | 8,6 | 8,3 | 7,4 | 6,2 | 4,8 | - | - | - | - |
| NR4 125C/B | 8,6 | 5 | - | 2,2 | 3 | | 10,2 | - | - | 10,2 | 10,1 | 10 | 9,6 | 9 | 8,2 | 7,1 | 5,7 | 4 | - |
| NR4 125B/A | 11,1 | 6,4 | - | 3 | 4 | | 12 | - | - | 12 | 11,9 | 11,8 | 11,6 | 11 | 10,4 | 9,4 | 8,2 | 6,7 | 5,1 |
| NR4 125A/A | - | 8,3 | 4,8 | 4 | 5,5 | | 13,6 | - | - | 13,6 | 13,5 | 13,4 | 13,2 | 12,9 | 12,3 | 11,4 | 10,3 | 8,8 | 7,2 |

**P1:** Maximum power input.
**P2:** Rated motor power output.
Tolerances according to UNI EN ISO 9906:2012

# NR, NRS

## Coverage chart n ≈ 2900 rpm

**Single operation**

### Three-phase

| Model | 230V | 400V | 690V | P2 | | Q = Flow | | | | | | | | | | | | | |
|---|---|---|---|---|---|---|---|---|---|---|---|---|---|---|---|---|---|---|---|
| | | | | | | m³/h | 0 | 15 | 16,8 | 18,9 | 21 | 24 | 27 | 30 | 33 | 37,8 | 39 | 42 | 45 |
| | | | | | | l/min | | 250 | 280 | 315 | 350 | 400 | 450 | 500 | 550 | 630 | 650 | 700 | 750 |
| | A | | | kW | HP | H (m) = Total head | | | | | | | | | | | | | |
| NRD 50/125F | 4,6 | 2,7 | - | 1,1 | 1,5 | | 13,7 | 13,2 | 12,7 | 12 | 11,2 | 9,9 | 8,5 | 6,8 | 4,8 | - | - | - | - |
| NRD 50/125C | 7,5 | 4,3 | - | 1,5 | 2 | | 17,8 | 17,8 | 17,4 | 16,8 | 16 | 14,8 | 13,3 | 11,7 | 9,9 | 6,8 | 5,9 | - | - |
| NRD 50/125A | 9,2 | 5,3 | - | 2,2 | 3 | | 20,8 | 21,2 | 20,9 | 20,5 | 19,9 | 18,7 | 17,4 | 15,8 | 14,1 | 11,1 | 10,4 | 8,3 | - |
| NRD 50/160C | 9,2 | 5,3 | - | 2,2 | 3 | | 23,4 | 22,9 | 22,4 | 21,7 | 20,9 | 19,4 | 17,7 | 15,7 | 13,4 | 9,1 | 7,8 | - | - |
| NRD 50/160B | 11,5 | 6,6 | - | 3 | 4 | | 25,6 | 25 | 24,6 | 24 | 23,3 | 22 | 20,4 | 18,5 | 16,2 | 11,9 | 10,7 | 7,5 | - |
| NRD 50/160A | - | 9,6 | 5,5 | 4 | 5,5 | | 34 | 34,6 | 34,3 | 33,8 | 33,2 | 32 | 30,5 | 28,7 | 26,7 | 22,8 | 21,7 | 18,8 | 15,6 |

### Three-phase

| Model | 230V | 400V | 690V | P2 | | Q = Flow | | | | | | | | | | | | | |
|---|---|---|---|---|---|---|---|---|---|---|---|---|---|---|---|---|---|---|---|
| | | | | | | m³/h | 0 | 21 | 24 | 27 | 30 | 33 | 37,8 | 42 | 48 | 54 | 60 | 66 | 69 | 72 |
| | | | | | | l/min | | 350 | 400 | 450 | 500 | 550 | 630 | 700 | 800 | 900 | 1000 | 1100 | 1150 | 1200 |
| | A | | | kW | HP | H (m) = Total head | | | | | | | | | | | | | |
| NRD 65/125F | 9,2 | 5,3 | - | 2,2 | 3 | | 16,2 | 14,9 | 14,4 | 13,8 | 13,2 | 12,5 | 11,3 | 10,1 | 8,2 | 6,1 | 3,9 | - | - | - |
| NRD 65/125D | 11,5 | 6,6 | - | 3 | 4 | | 20,4 | 19,1 | 18,6 | 18,1 | 17,5 | 16,9 | 15,7 | 14,4 | 12,4 | 10 | 7,2 | 4,3 | - | - |
| NRD 65/125A | - | 9,6 | 5,5 | 4 | 5,5 | | 25,3 | 25 | 24,7 | 24,3 | 23,8 | 23,2 | 22,1 | 21 | 19,1 | 16,9 | 14,3 | 11,5 | 9,9 | - |
| NRD 65/160B | - | 10,8 | 6,2 | 5,5 | 7,5 | | 30,7 | 31,3 | 31,1 | 30,8 | 30,4 | 29,9 | 28,6 | 27,2 | 24,7 | 21,7 | 18,2 | 14,5 | 12,5 | 10,4 |
| NRD 65/160A | - | 14,3 | 8,3 | 7,5 | 10 | | 37,5 | 37,7 | 37,6 | 37,4 | 37,1 | 36,6 | 35,6 | 34,4 | 32,1 | 29,3 | 26 | 22,5 | 20,6 | 18,5 |

**Parallel operation**
For parallel operation see curve diagram

**P1:** Maximum power input.
**P2:** Rated motor power output.
Tolerances according to UNI EN ISO 9906:2012

## Performance n ≈ 1450 rpm

**Single operation**

### Three-phase

| Model | 230V | 400V | P2 | | Q = Flow | | | | | | | | | | | | | | |
|---|---|---|---|---|---|---|---|---|---|---|---|---|---|---|---|---|---|---|---|
| | | | | | m³/h | 0 | 5,4 | 6 | 7,5 | 8,4 | 9,6 | 10,8 | 12 | 13,2 | 15 | 16,8 | 18,9 | 21 | 24 | 27 |
| | | | | | l/min | | 90 | 100 | 125 | 140 | 160 | 180 | 200 | 220 | 250 | 280 | 315 | 350 | 400 | 450 |
| | A | | kW | HP | H (m) = Total head | | | | | | | | | | | | | | |
| NRD4 50/160C | 1,65 | 0,95 | 0,37 | 0,5 | | 5,9 | 5,9 | 5,8 | 5,7 | 5,5 | 5,3 | 5,1 | 4,8 | 4,5 | 3,9 | 3,1 | 2,1 | - | - | - |
| NRD4 50/160B | 2,6 | 1,5 | 0,55 | 0,75 | | 7,3 | 7,5 | 7,5 | 7,4 | 7,3 | 7,1 | 6,8 | 6,6 | 6,3 | 5,7 | 5,1 | 4,1 | 3 | 1,3 | - |
| NRD4 50/160A | 3,3 | 1,9 | 0,75 | 1 | | 9,3 | 9,5 | 9,5 | 9,4 | 9,3 | 9,2 | 9,1 | 8,9 | 8,6 | 8,1 | 7,6 | 6,8 | 5,8 | 4,1 | 2,1 |

### Three-phase

| Model | 230V | 400V | P2 | | Q = Flow | | | | | | | | | | | | | | |
|---|---|---|---|---|---|---|---|---|---|---|---|---|---|---|---|---|---|---|---|
| | | | | | m³/h | 0 | 10,8 | 12 | 13,2 | 15 | 16,8 | 18,9 | 21 | 24 | 27 | 30 | 33 | 37,8 | 42 |
| | | | | | l/min | | 180 | 200 | 220 | 250 | 280 | 315 | 350 | 400 | 450 | 500 | 550 | 630 | 700 |
| | A | | kW | HP | H (m) = Total head | | | | | | | | | | | | | | |
| NRD4 65/125F | 1,65 | 0,95 | 0,37 | 0,5 | | 4,3 | 4,1 | 4 | 3,9 | 3,7 | 3,5 | 3,3 | 3 | 2,5 | 2 | 1,3 | - | - | - |
| NRD4 65/125D | 2,6 | 1,5 | 0,55 | 0,75 | | 5,4 | 5,2 | 5,1 | 5 | 4,9 | 4,7 | 4,4 | 4,1 | 3,6 | 3,1 | 2,5 | 1,7 | - | - |
| NRD4 65/125A | 3,3 | 1,9 | 0,75 | 1 | | 6,5 | 6,4 | 6,3 | 6,3 | 6,1 | 6 | 5,8 | 5,5 | 5 | 4,4 | 3,8 | 3,1 | 2 | - |
| NRD4 65/160B | 5 | 2,9 | 1,1 | 1,5 | | 8,1 | 8,2 | 8,2 | 8,1 | 8 | 7,9 | 7,6 | 7,3 | 6,7 | 6 | 5,1 | 4,1 | 2,5 | - |
| NRD4 65/160A | 5 | 2,9 | 1,1 | 1,5 | | 9,8 | 9,8 | 9,8 | 9,7 | 9,6 | 9,4 | 9,2 | 8,9 | 8,3 | 7,7 | 6,9 | 6 | 4,3 | 2,6 |

**Parallel operation**
For parallel operation see curve diagram

**P1:** Maximum power input.
**P2:** Rated motor power output.
Tolerances according to UNI EN ISO 9906:2012

# NR, NRS

calpeda

## Coverage chart n ≈ 2900 rpm

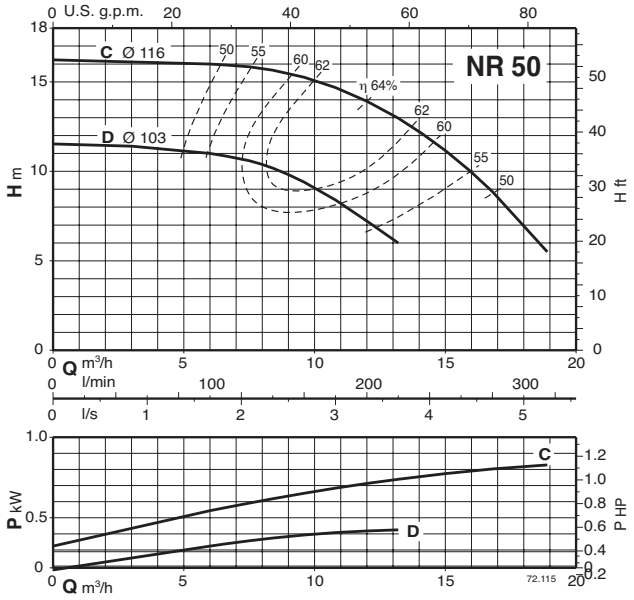


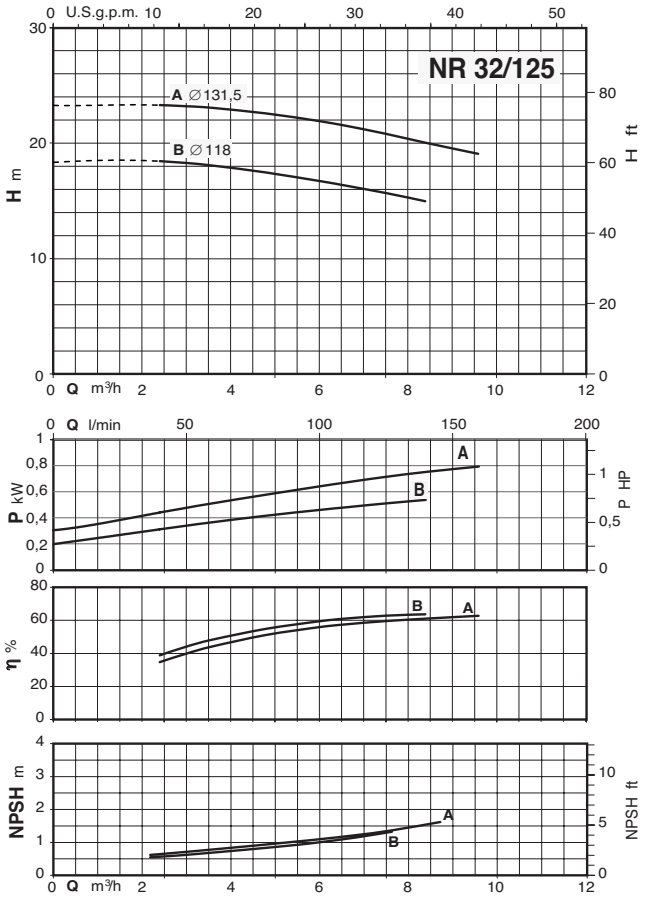


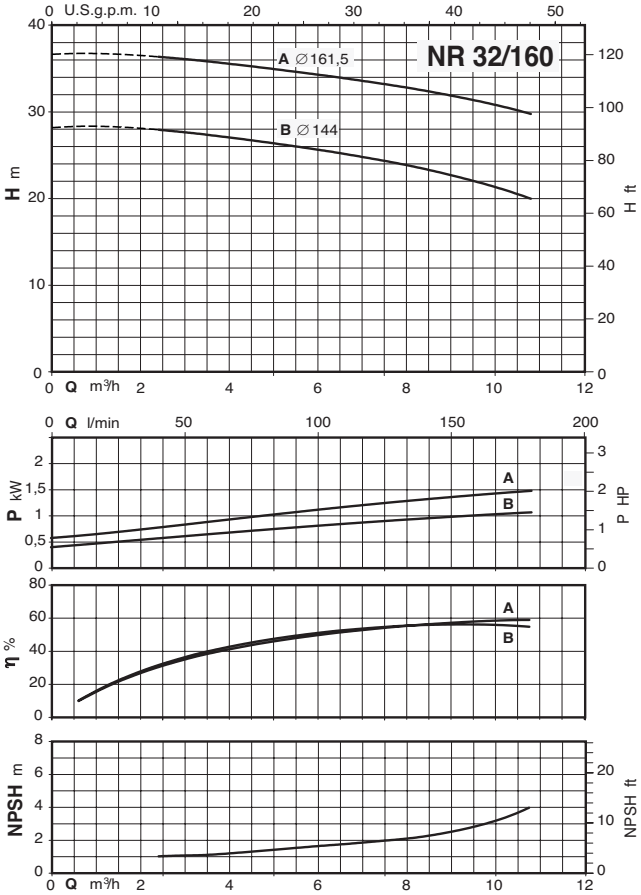


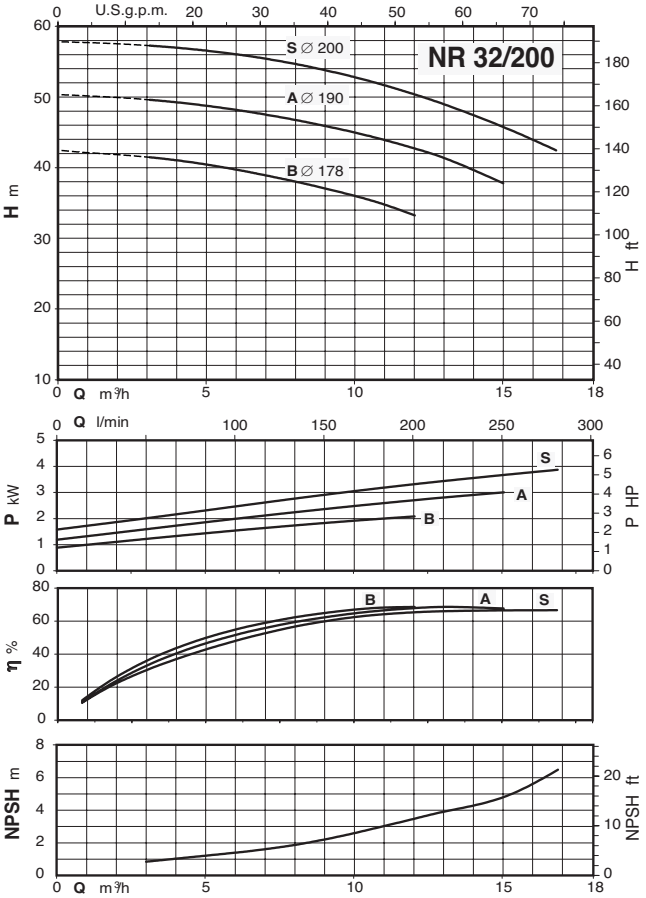

# NR, NRS

## Coverage chart n ≈ 2900 rpm

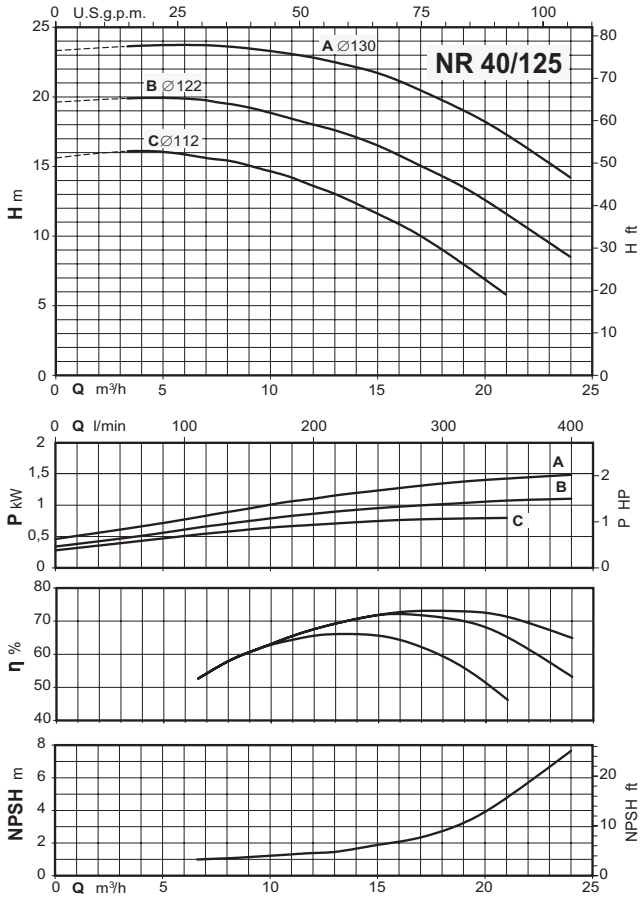


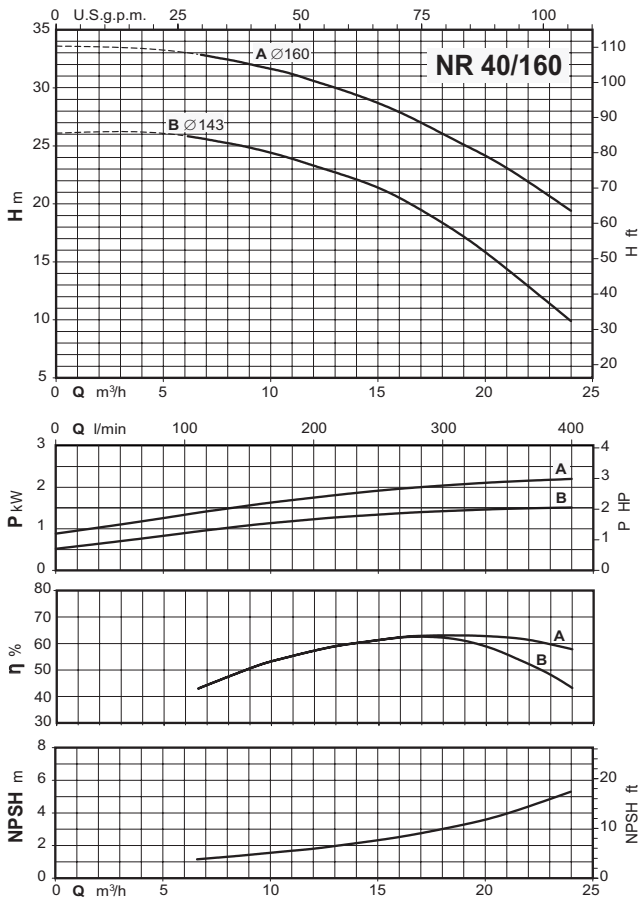


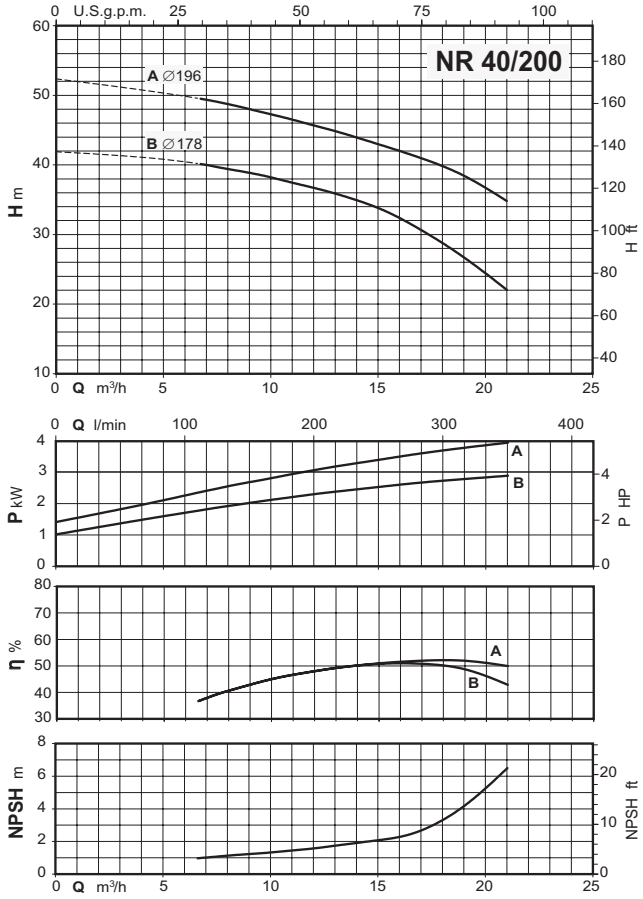

# NR, NRS

## Coverage chart n ≈ 2900 rpm

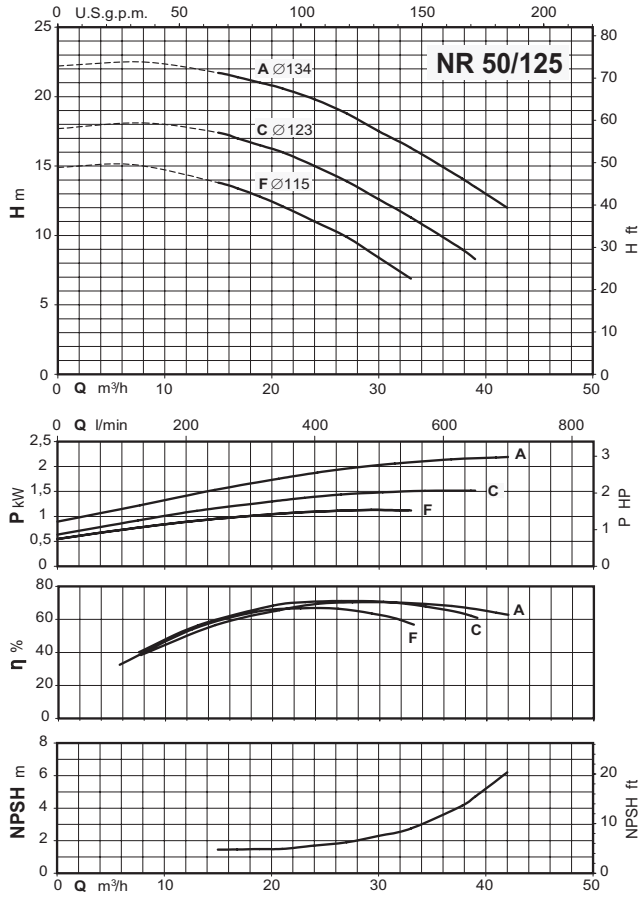


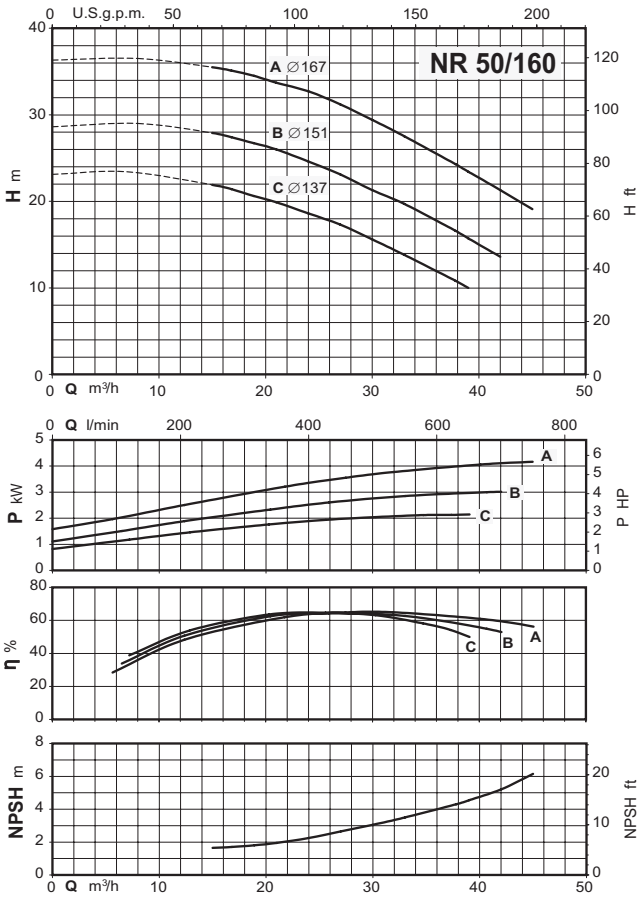


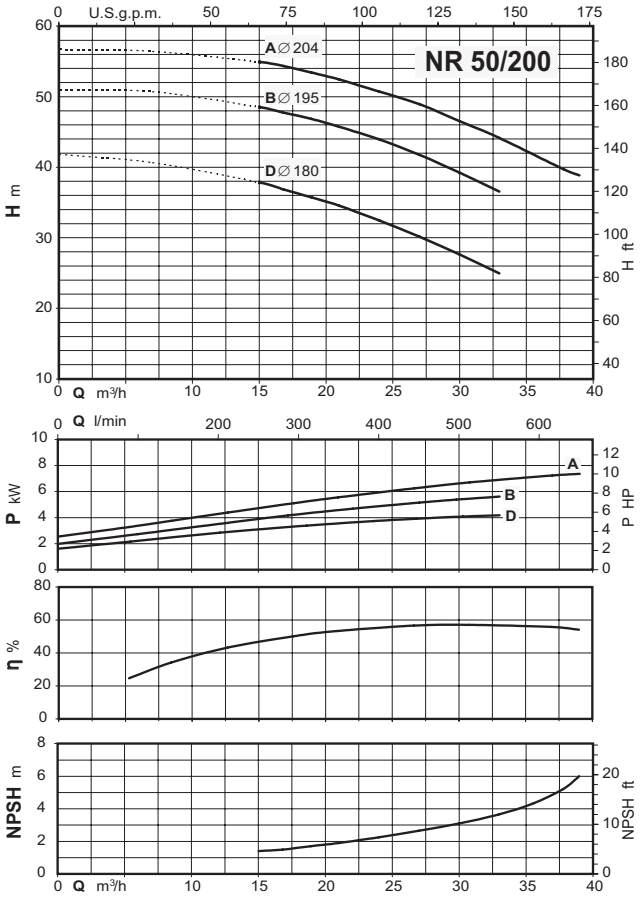


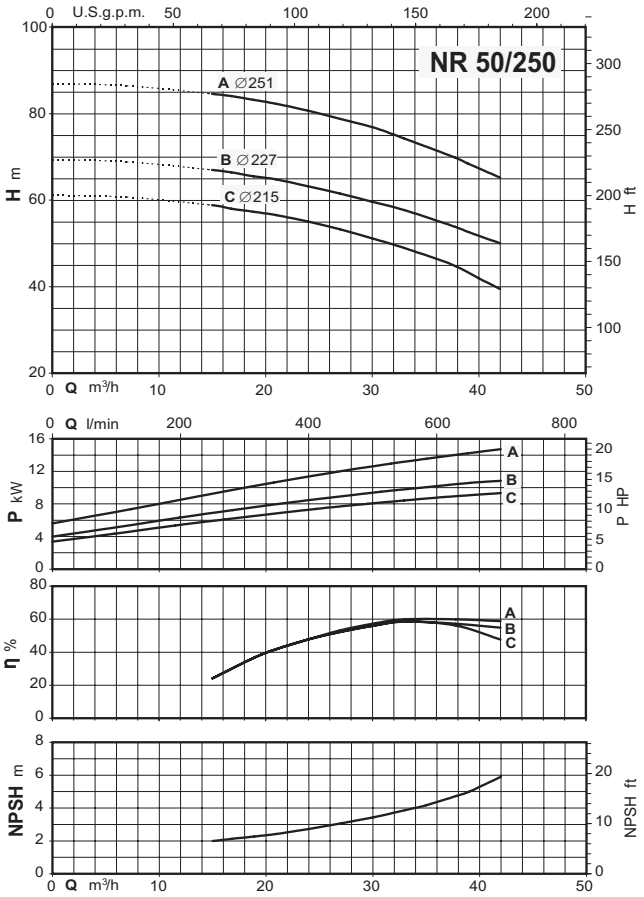

# NR, NRS

## Coverage chart n ≈ 2900 rpm

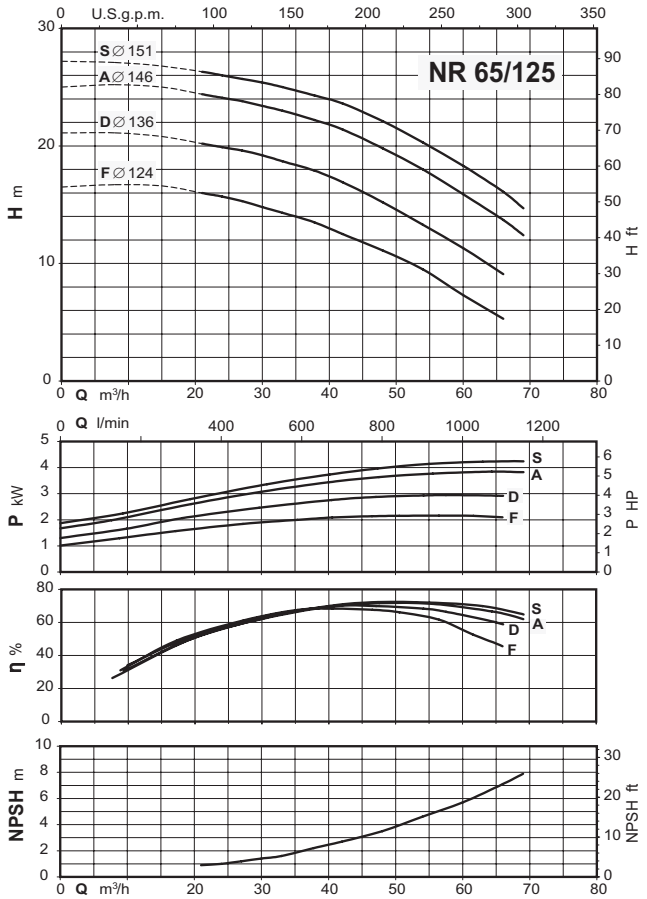


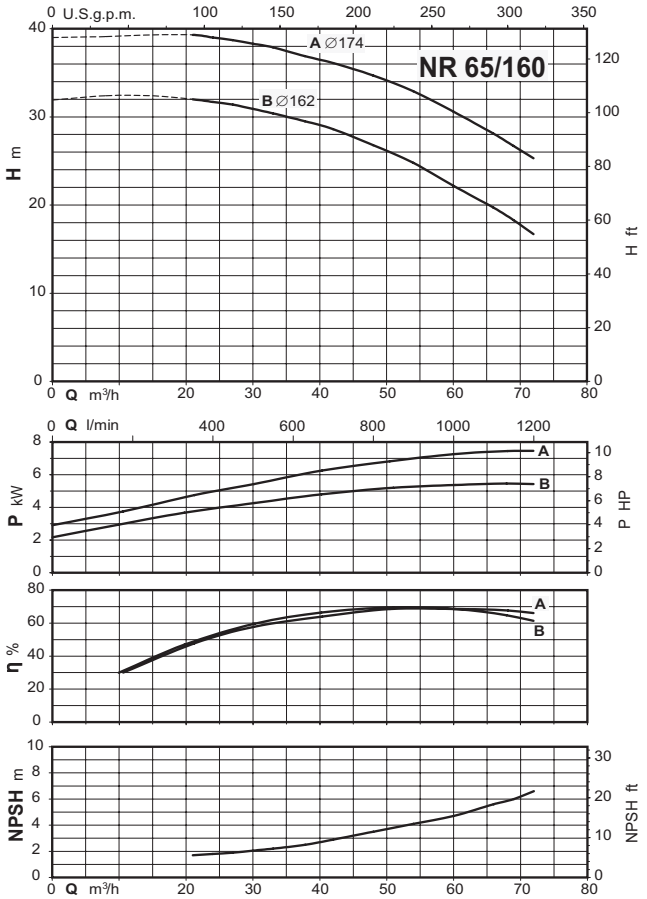


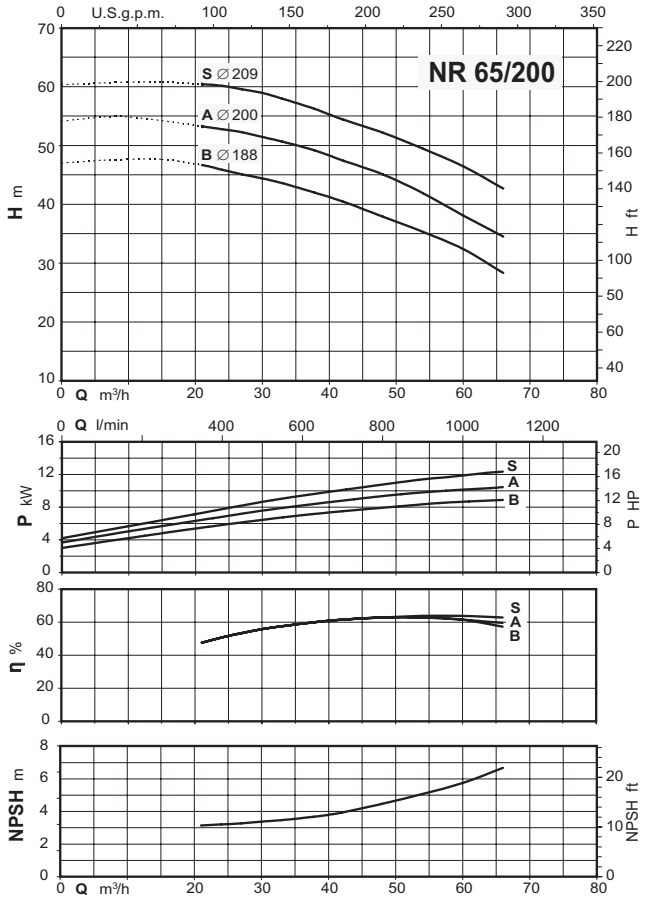


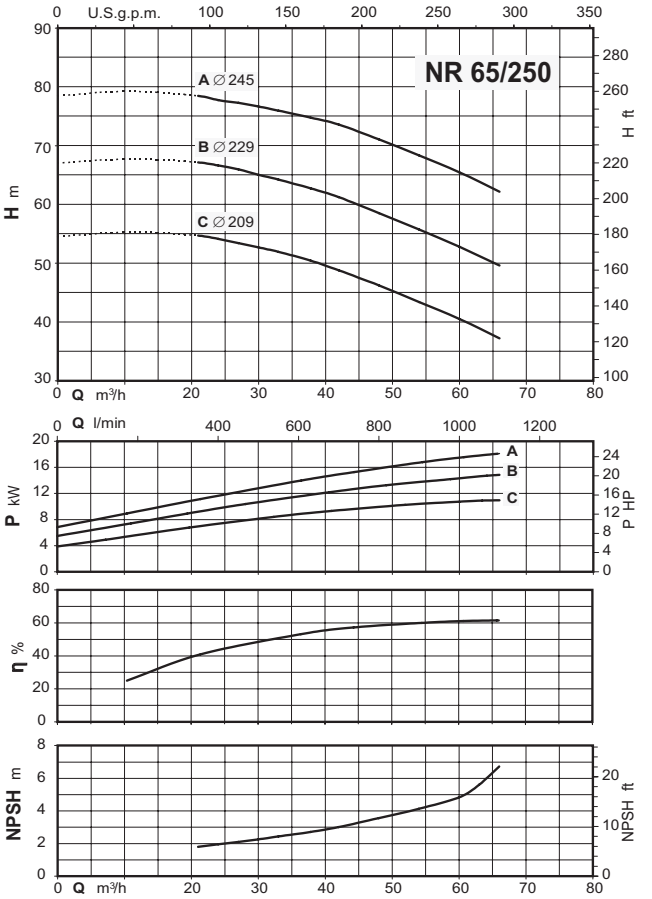

# NR, NRS

calpeda

## Coverage chart n ≈ 2900 rpm

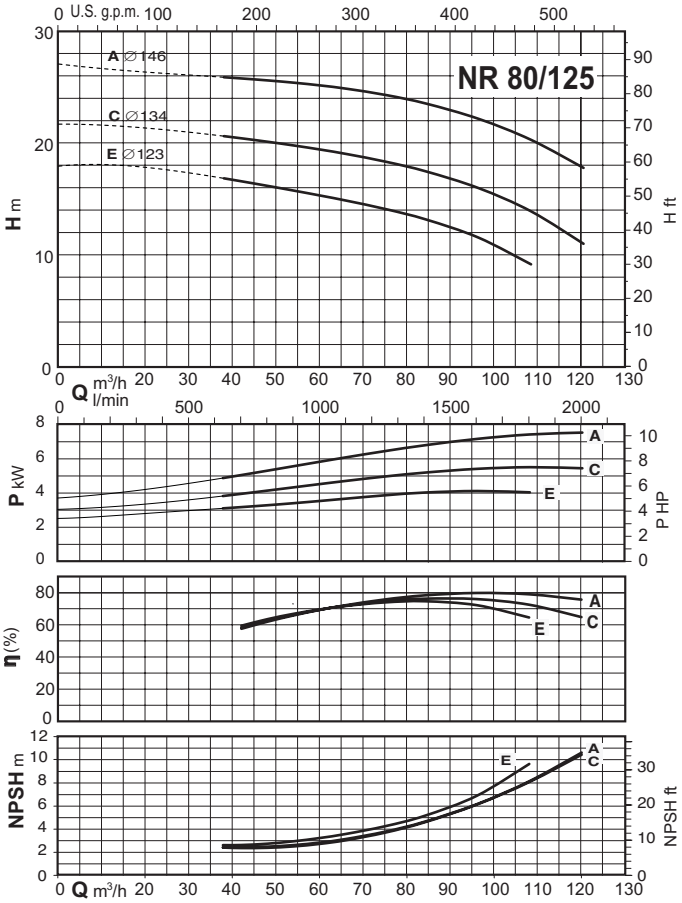


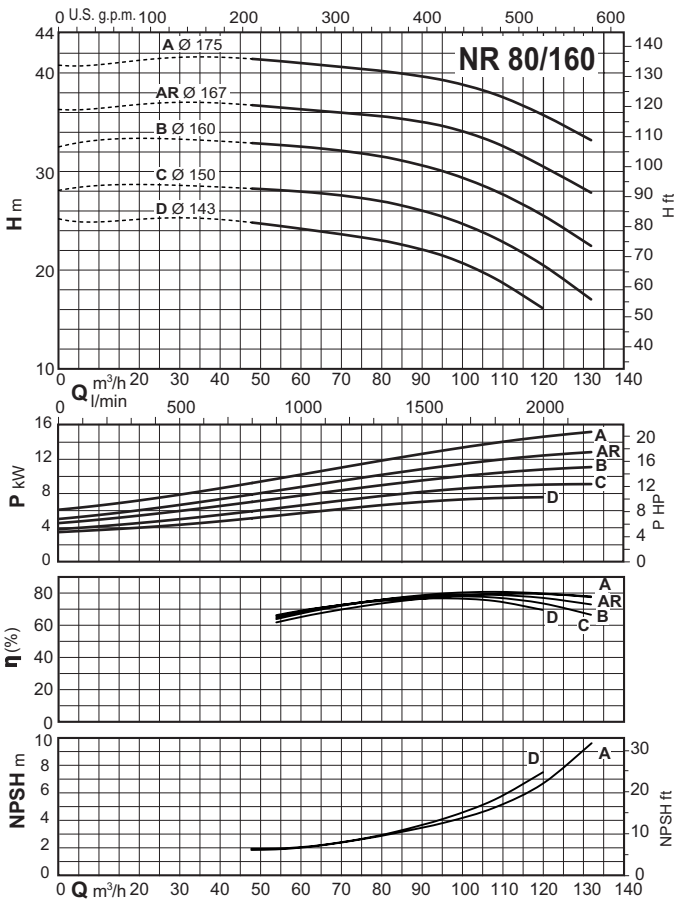


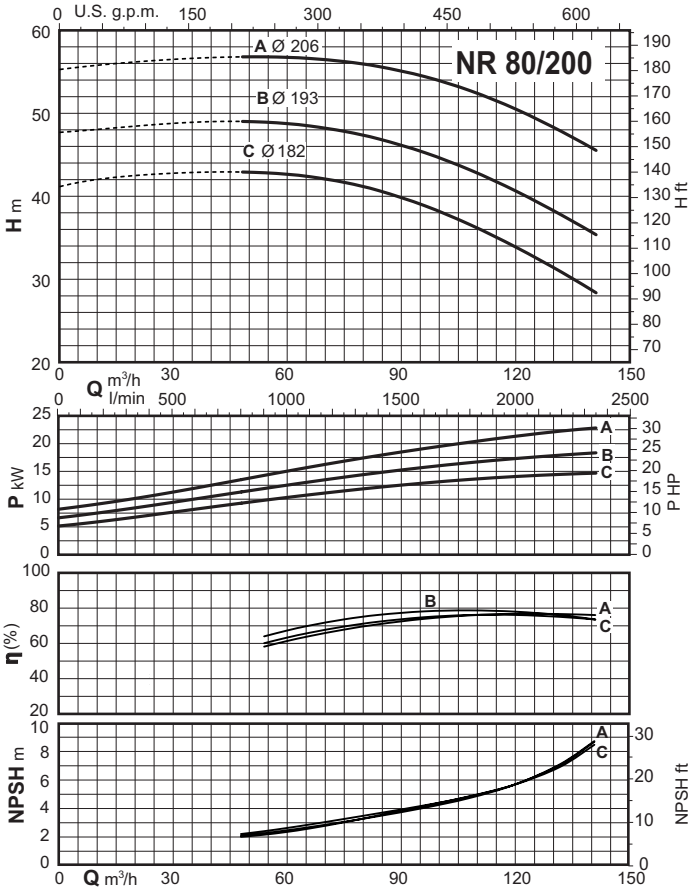


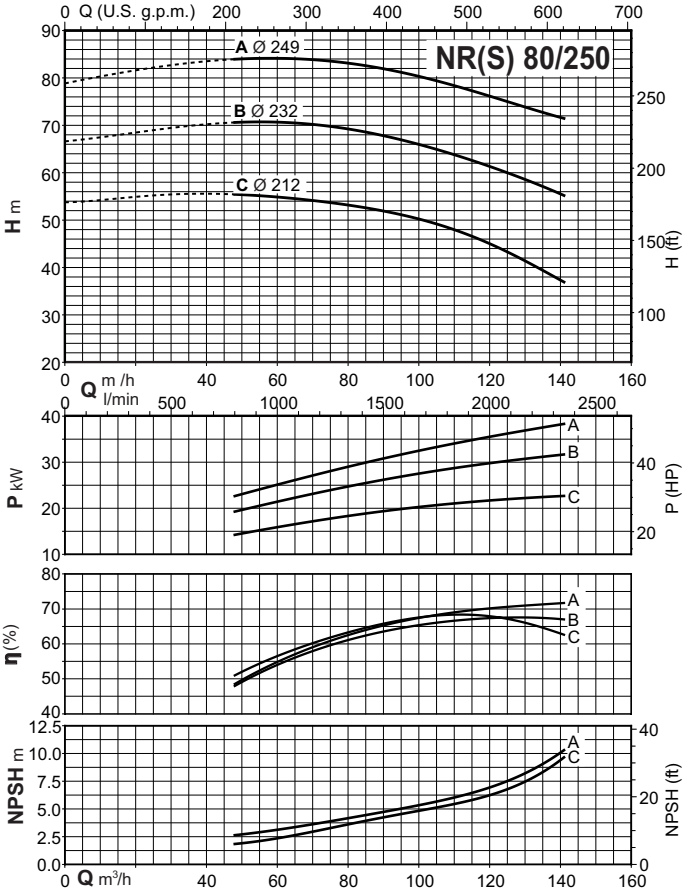

# NR, NRS

## Coverage chart n ≈ 1450 rpm

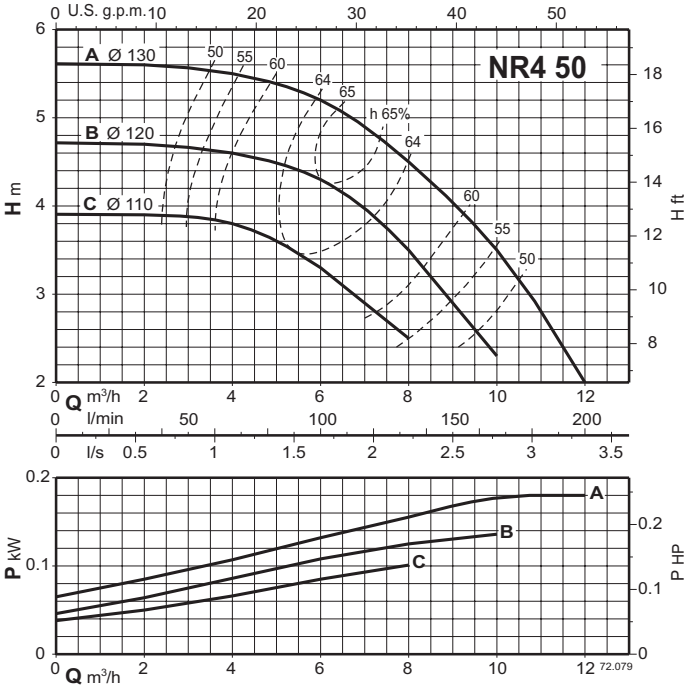


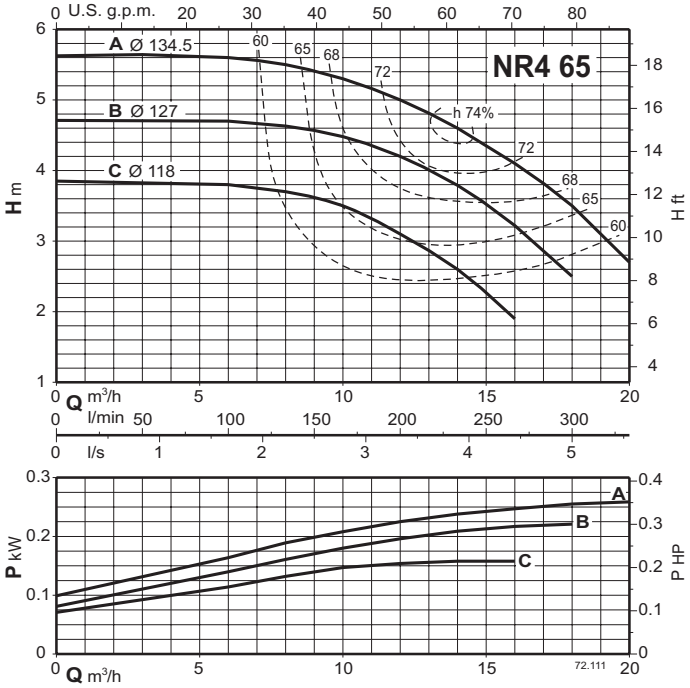

# NR, NRS

## Coverage chart n ≈ 1450 rpm

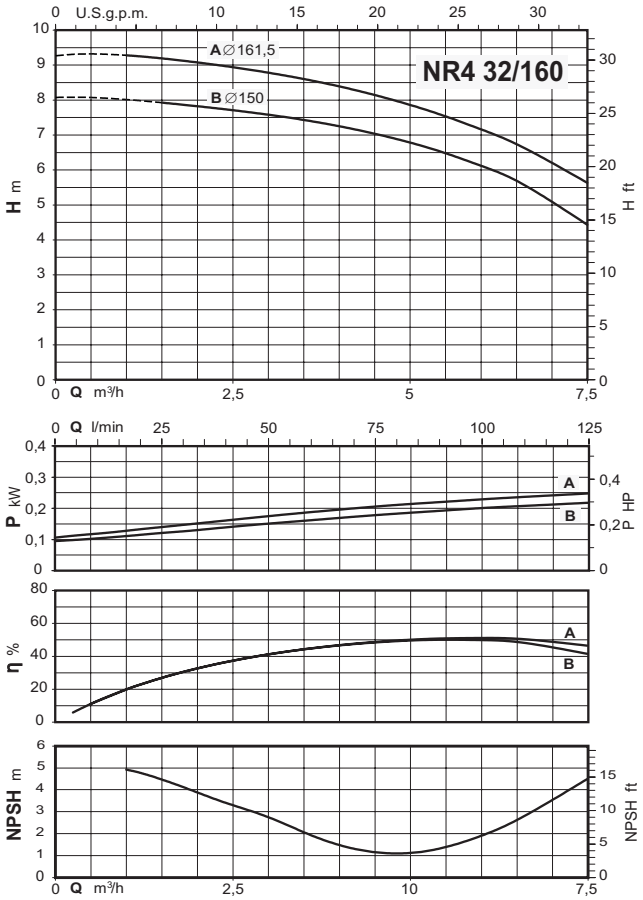


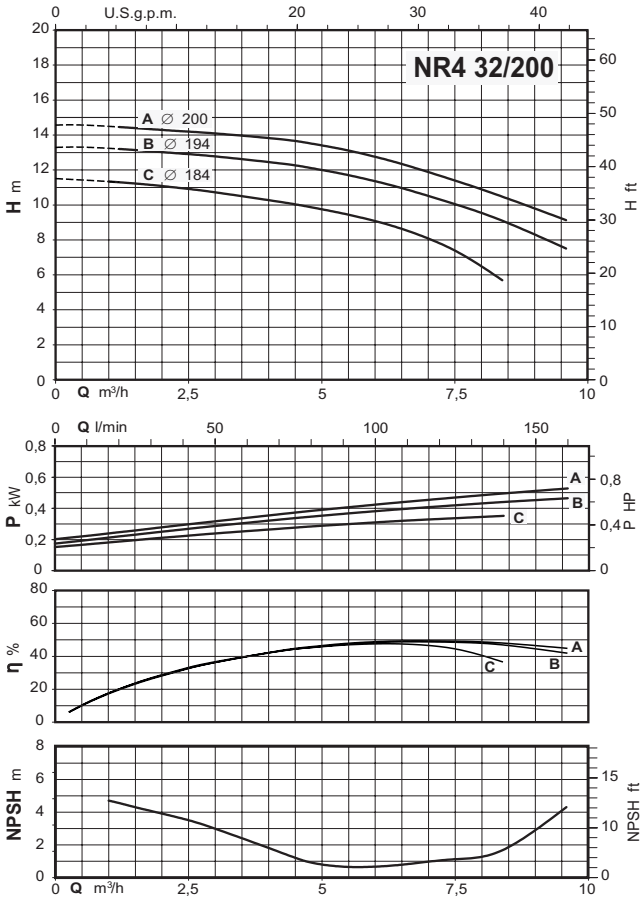


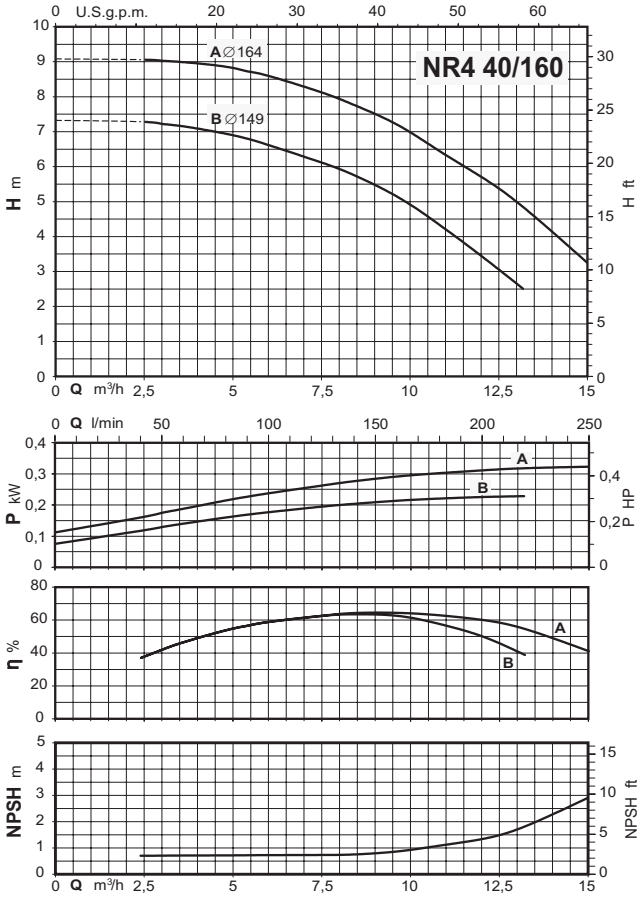


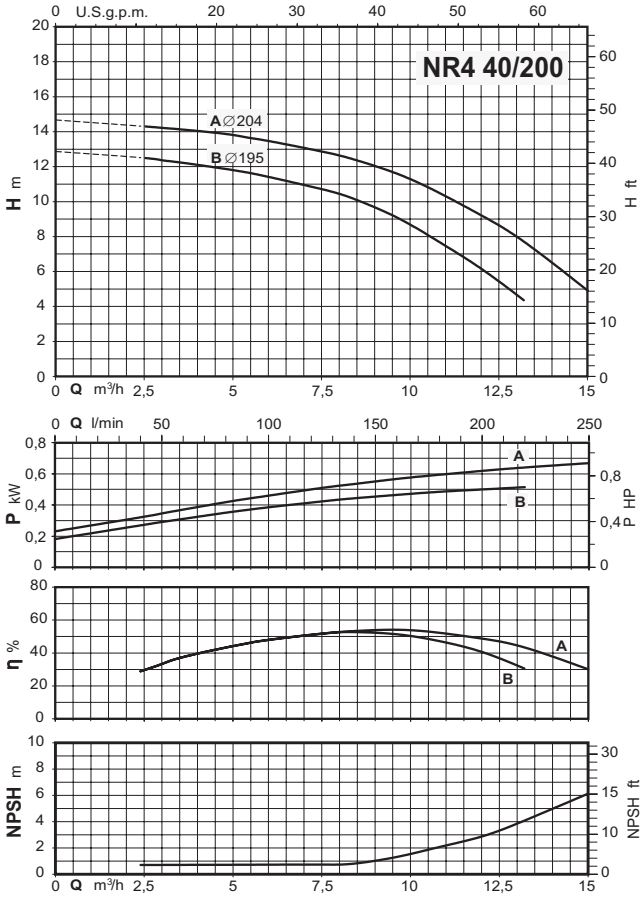

# NR, NRS

## Coverage chart n ≈ 1450 rpm

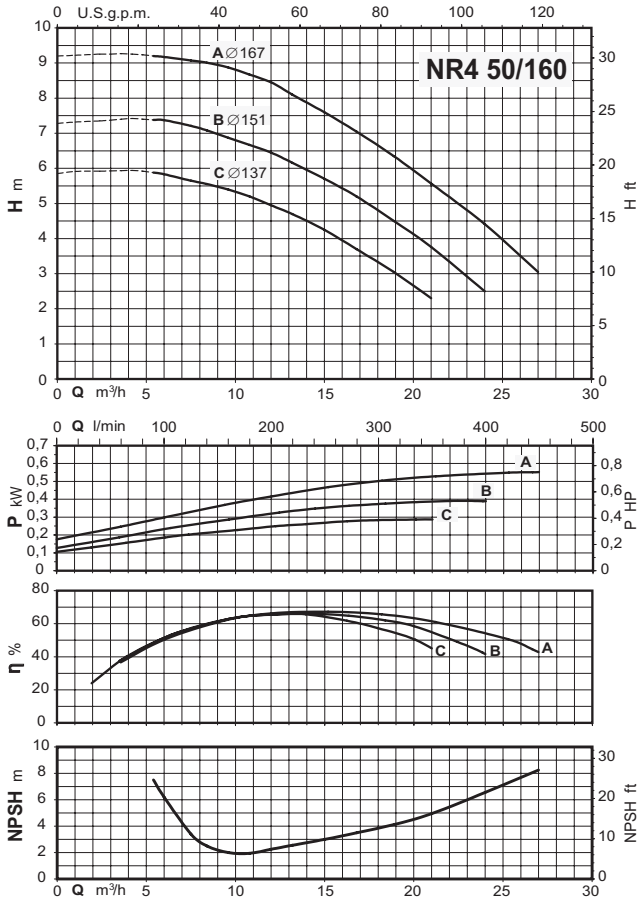


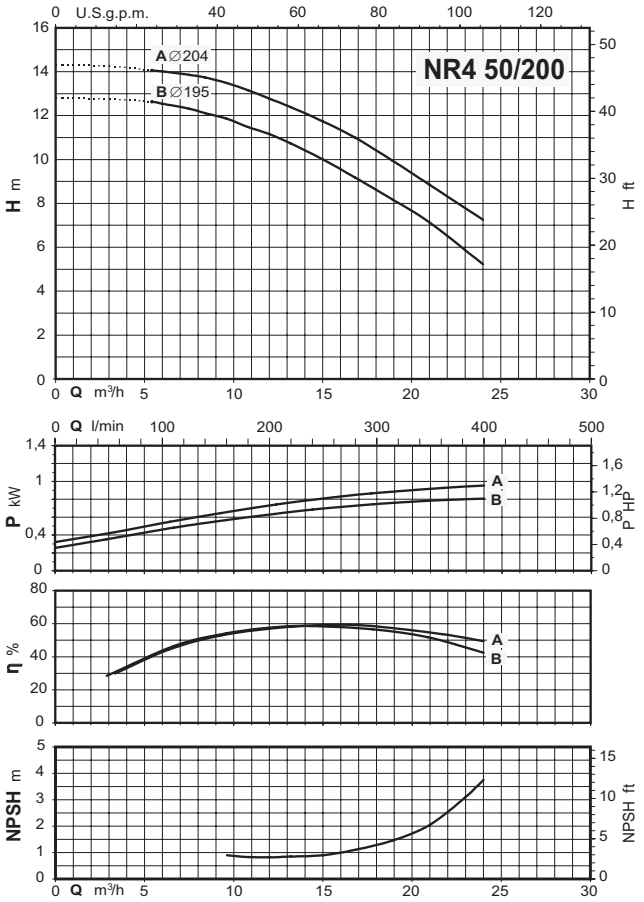


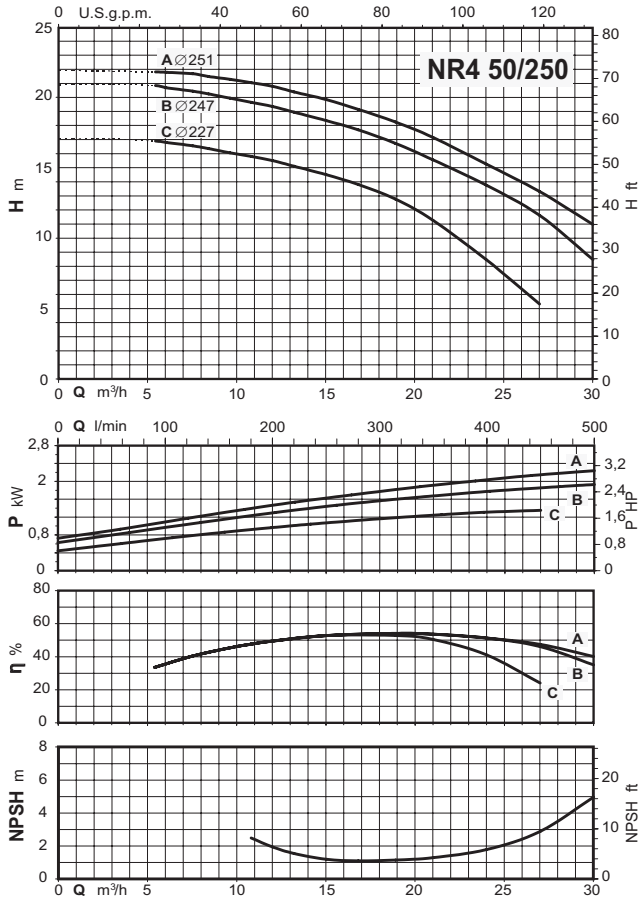

# NR, NRS

## Coverage chart n ≈ 1450 rpm

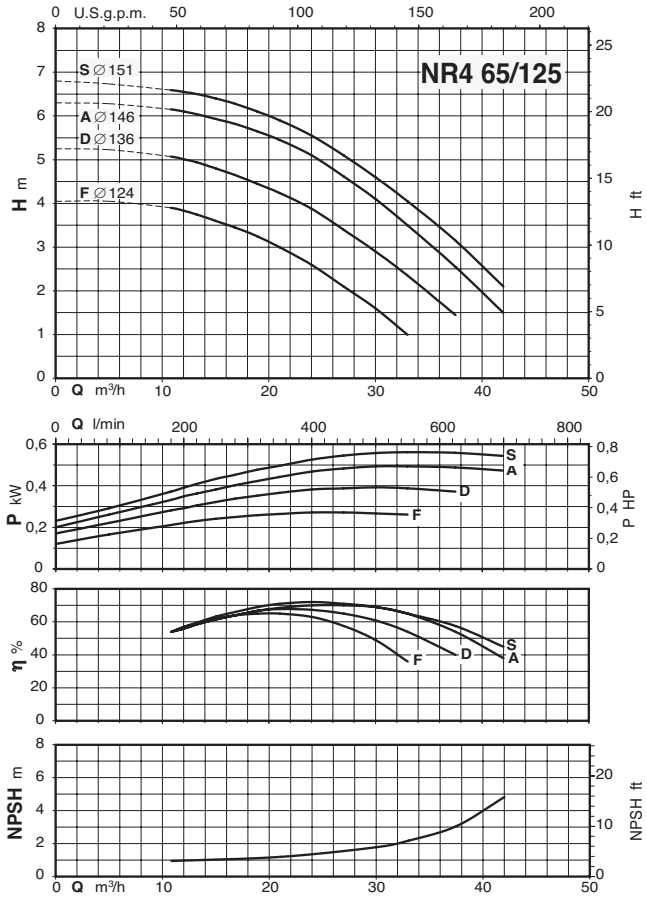


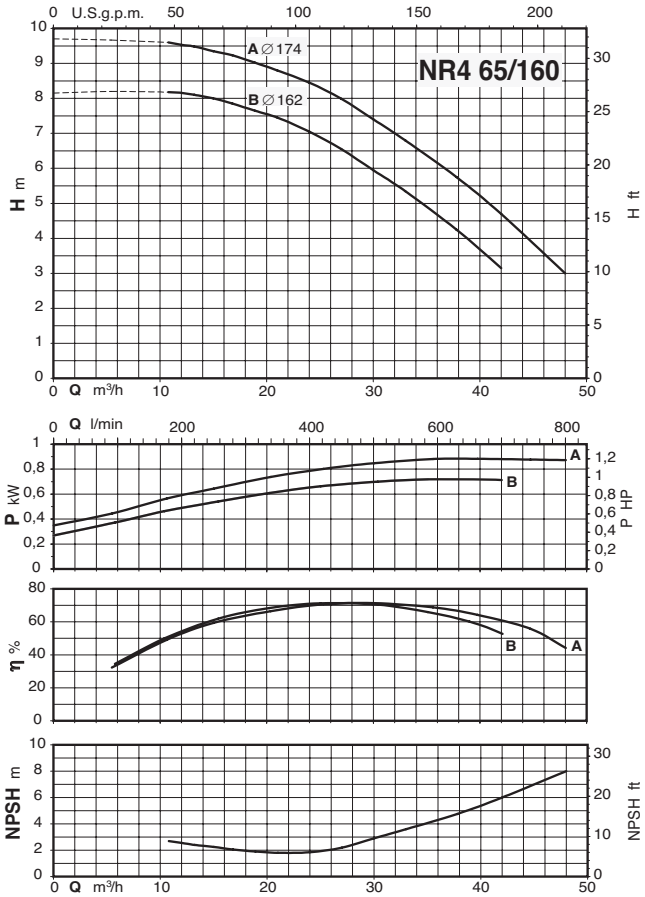


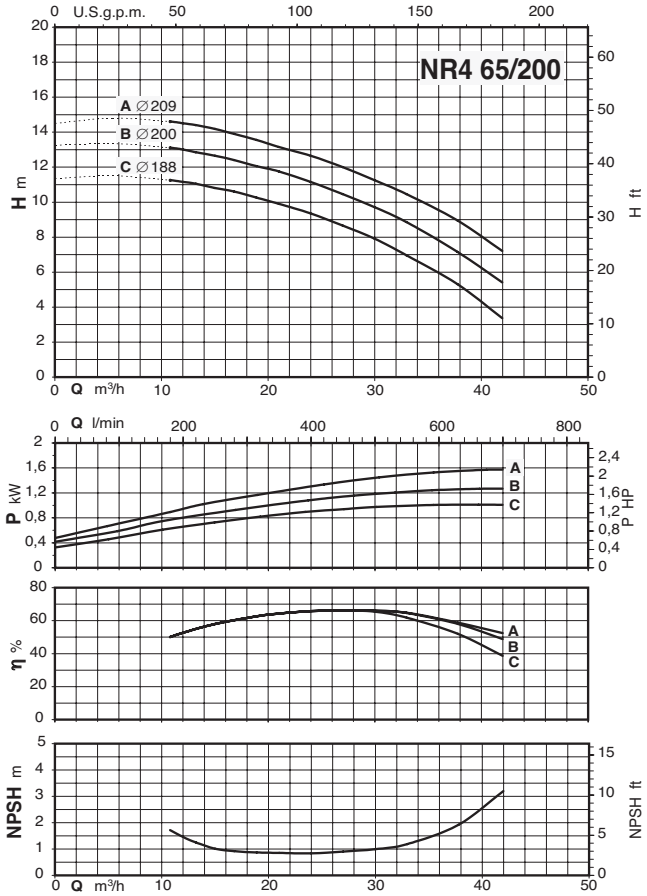


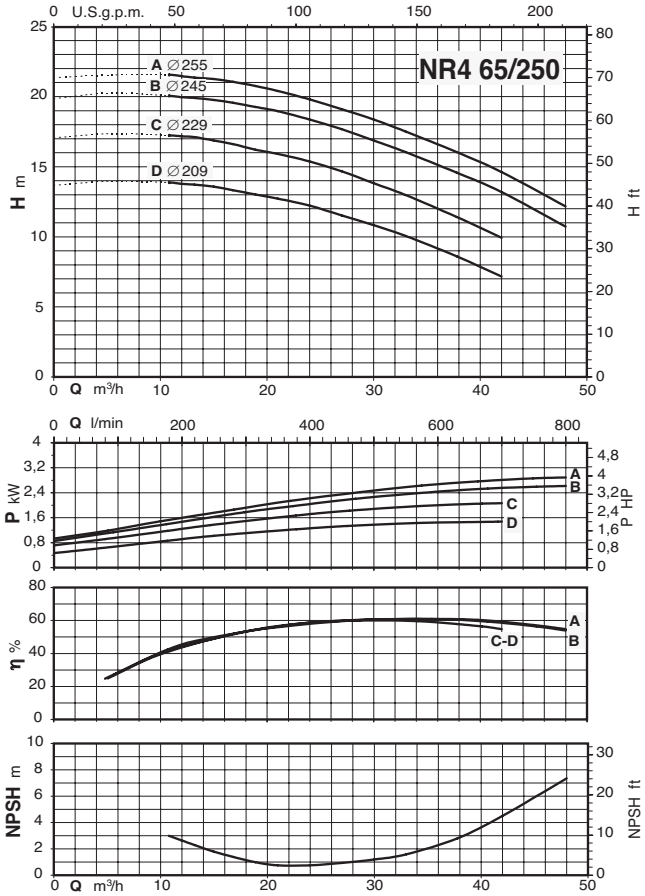

# NR, NRS

## Coverage chart n ≈ 1450 rpm

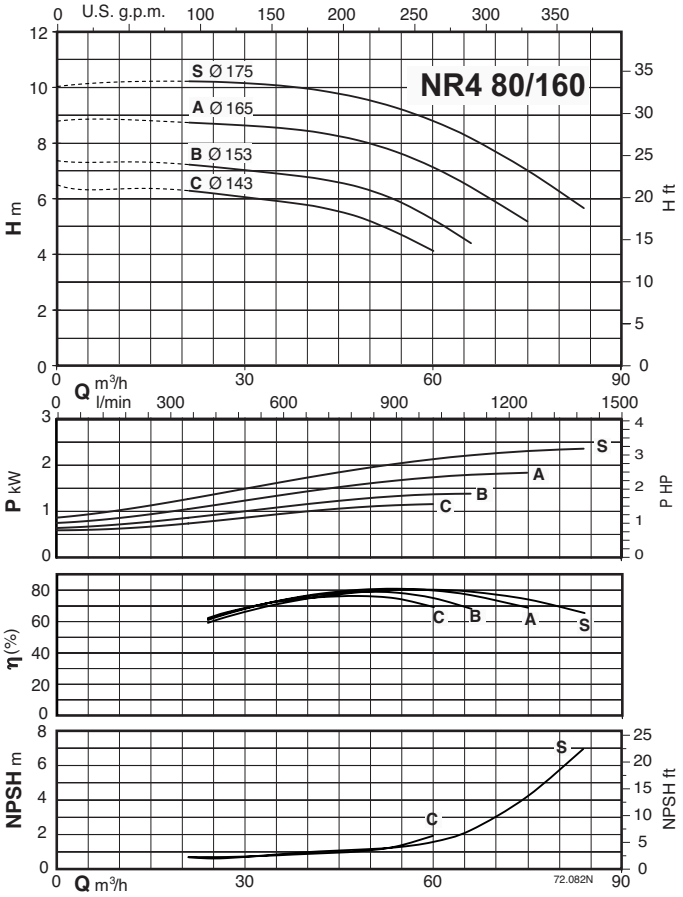


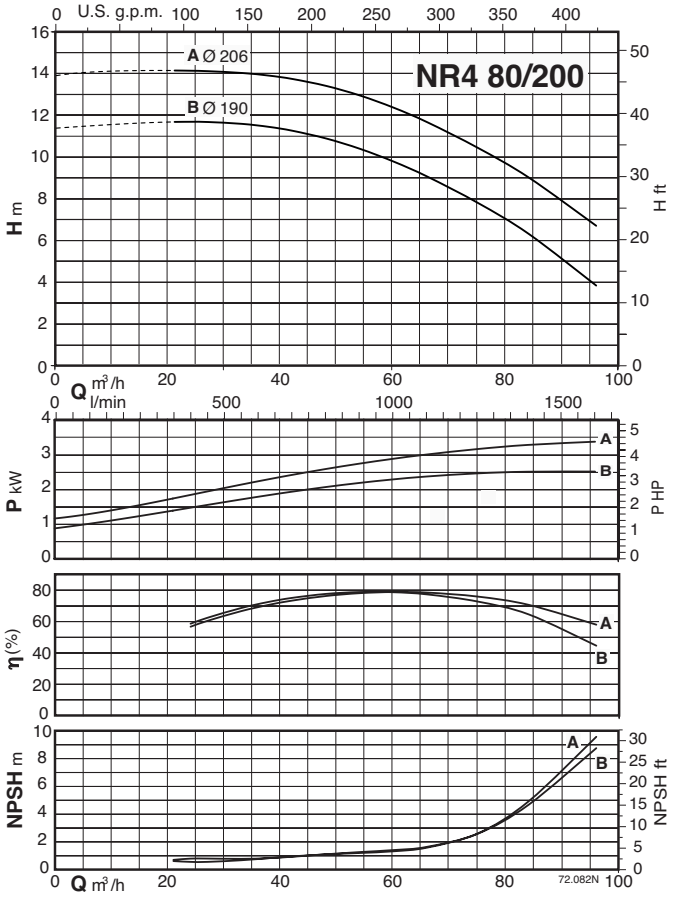


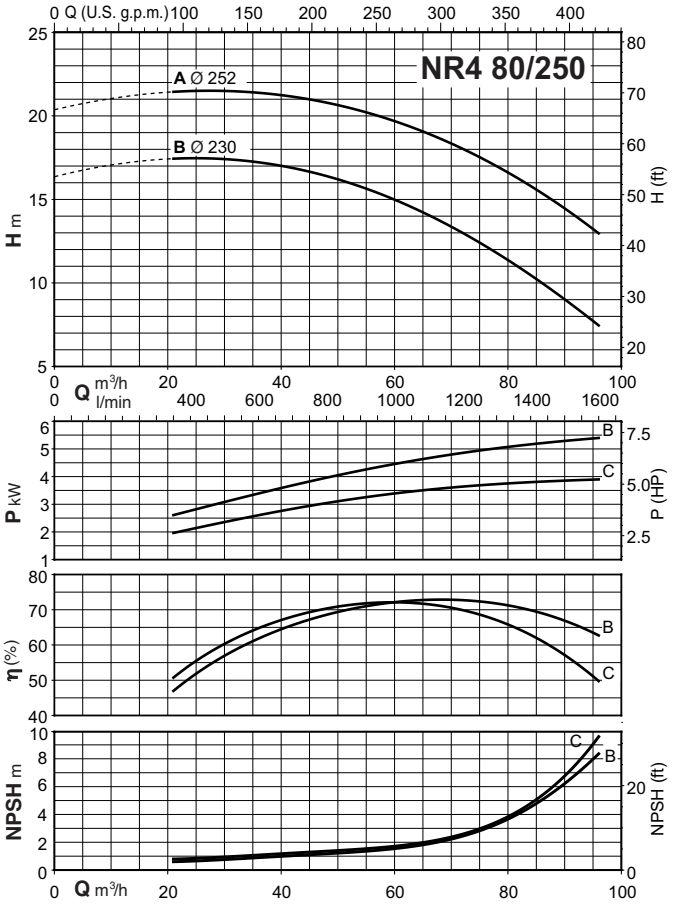

# NR, NRS

## Coverage chart n ≈ 1450 rpm

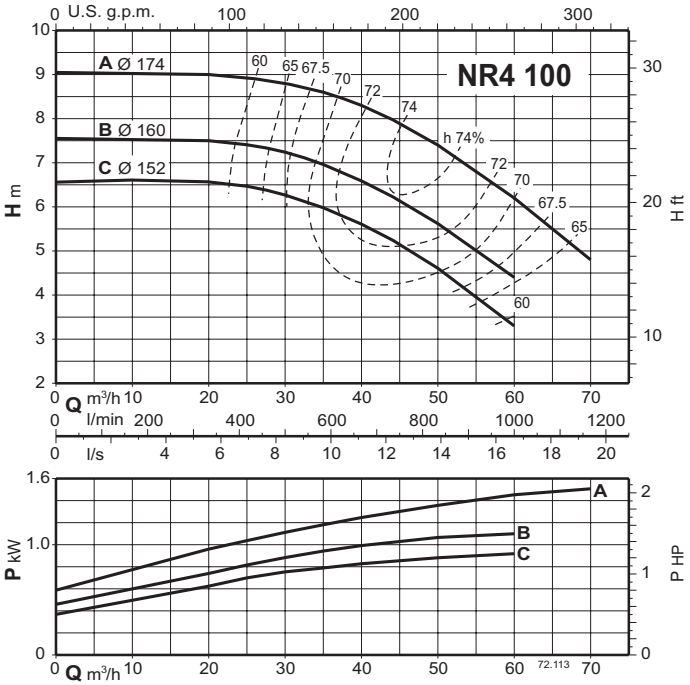


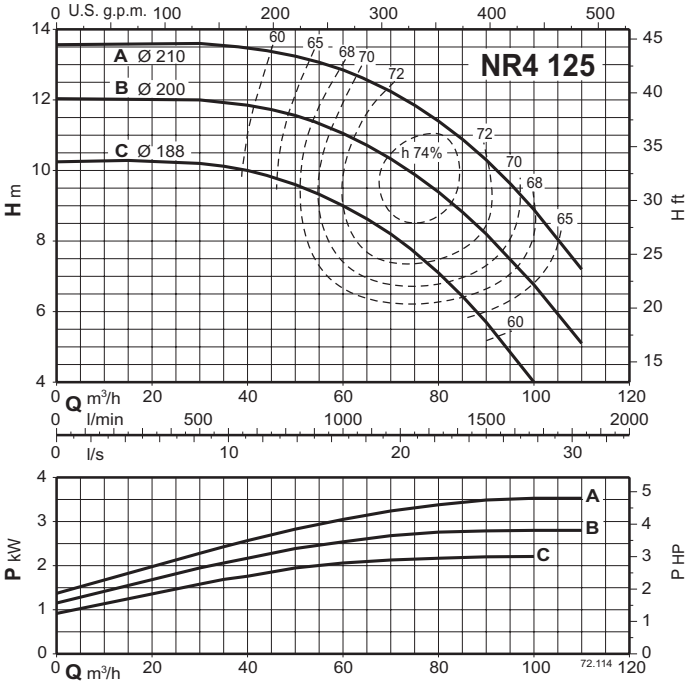

# NR, NRS

## Coverage chart n ≈ 2900 rpm

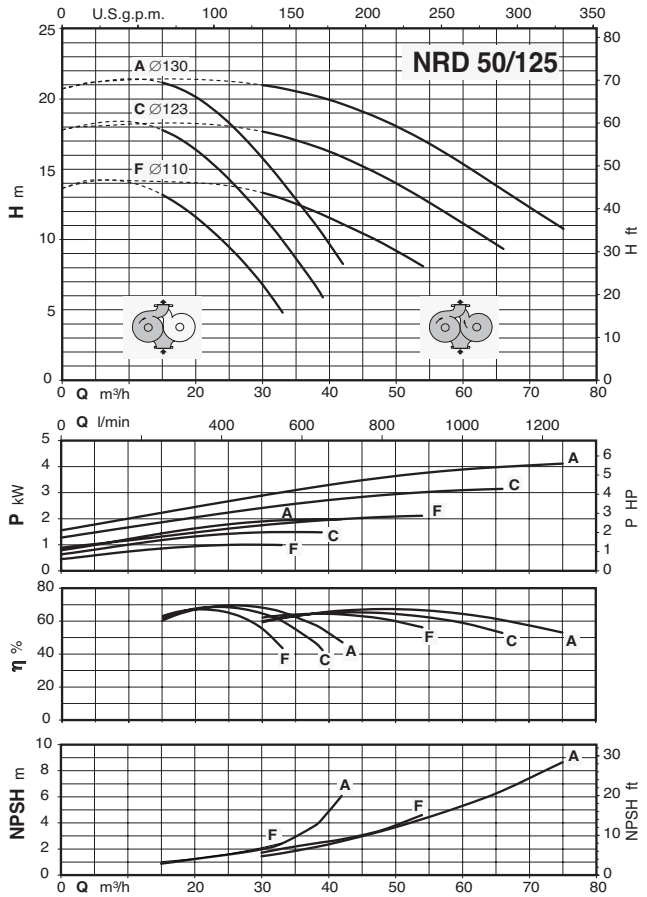


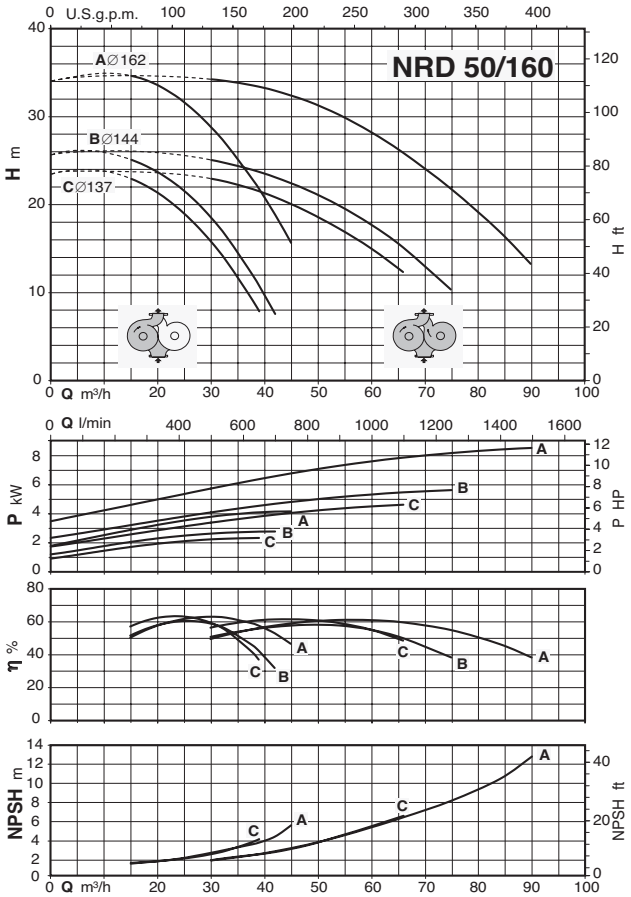


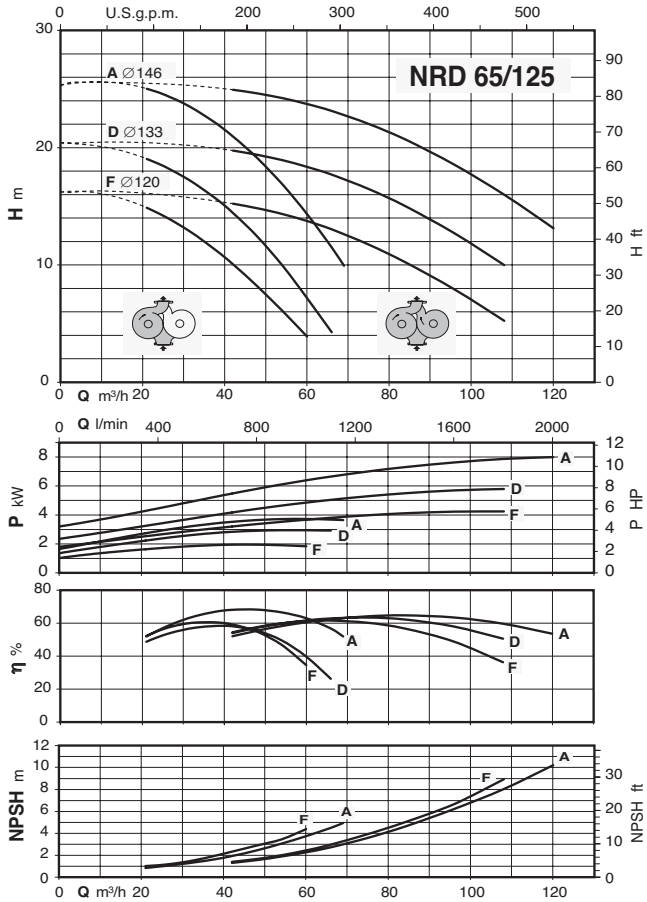


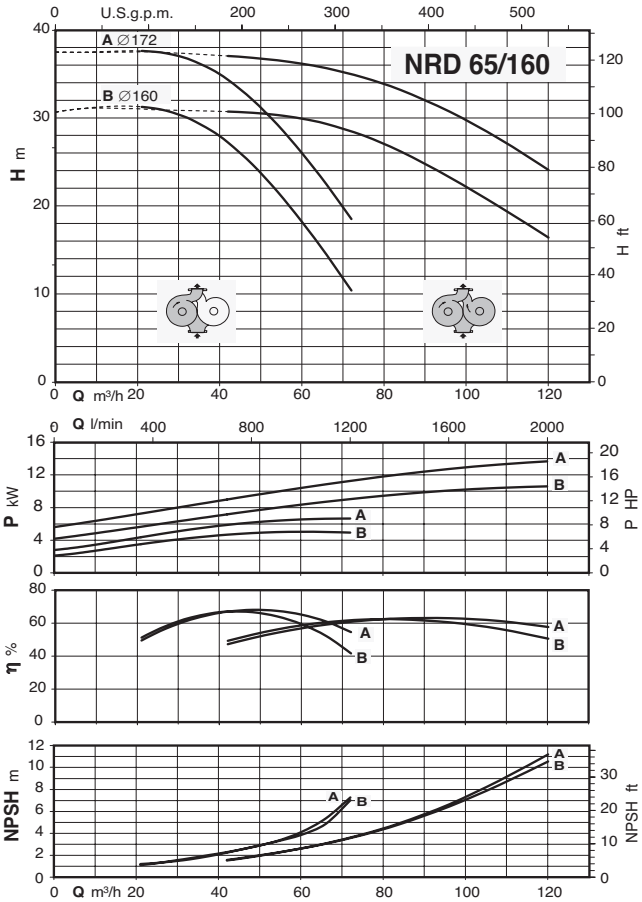

# NR, NRS

## Coverage chart n ≈ 1450 rpm

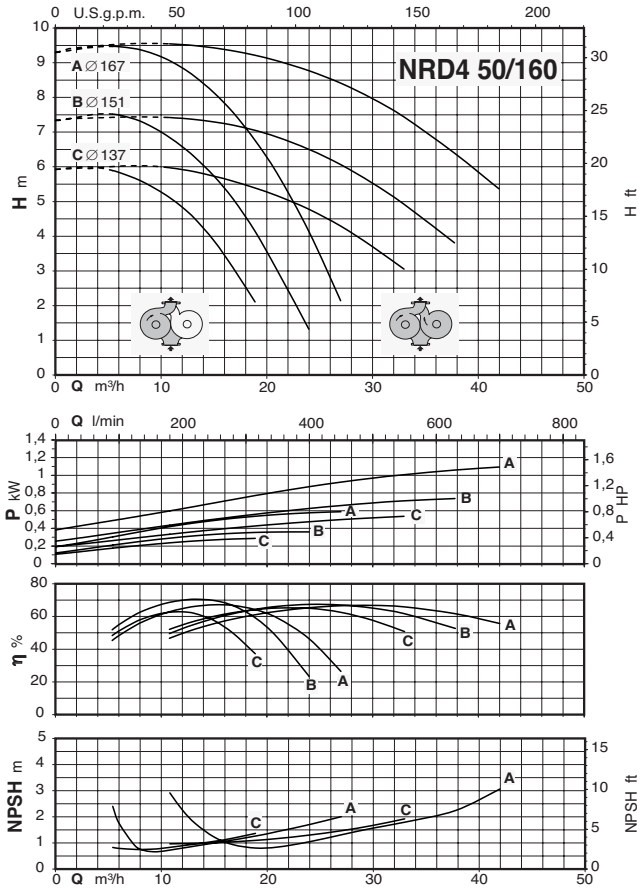


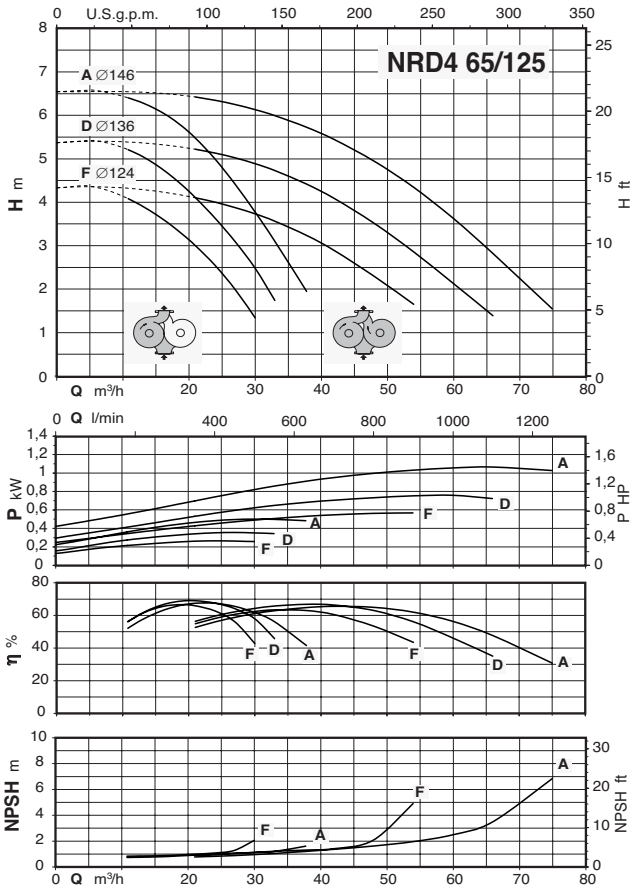


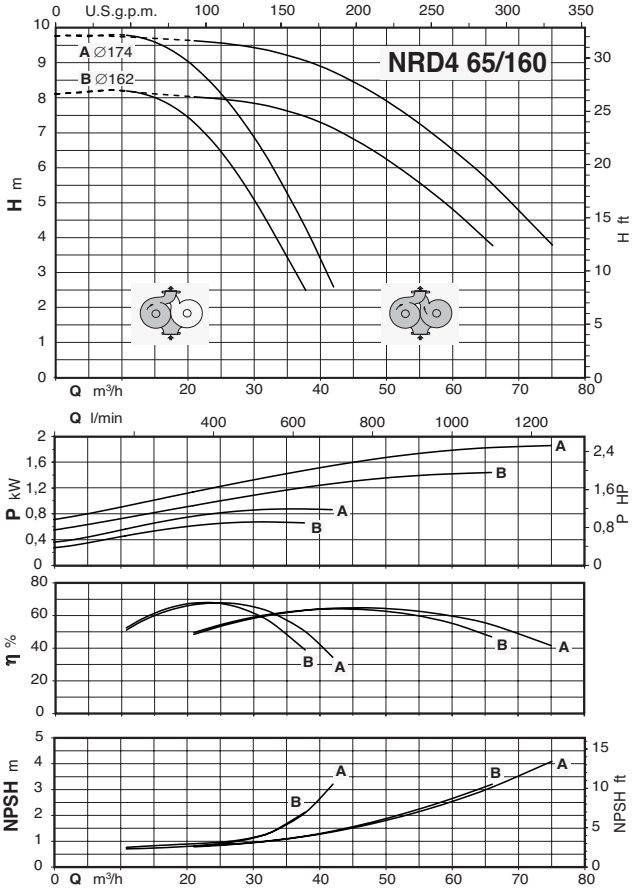

# NR, NRS

## Dimensions and weights

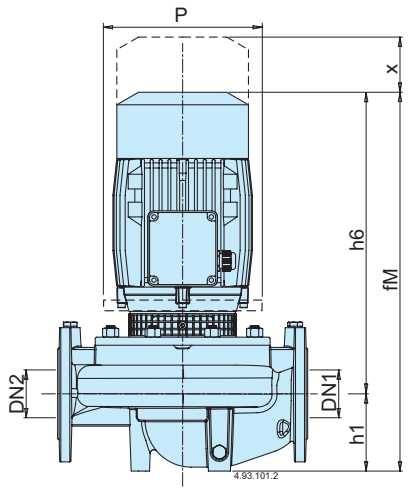


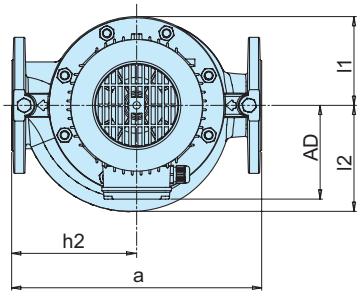


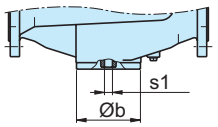


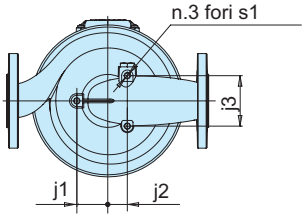


| TYPE | | | mm | | | | | | | | | | | | | | | kg |
|---|---|---|---|---|---|---|---|---|---|---|---|---|---|---|---|---|---|---|
| | DN1 | DN2 | a | AD | b | fM | h1 | h2 | h6 | j1 | j2 | j3 | l1 | l2 | P | s1 | x | Weight |
| NR 50D/A | 50 | 50 | 320 | 113 | 98 | 363.5 | 90 | 160 | 273.5 | - | - | - | 93 | 100 | - | M16 | 70 | 20.9 |
| NR 50C/B | 50 | 50 | 320 | 113 | 98 | 363.5 | 90 | 160 | 273.5 | - | - | - | 93 | 100 | - | M16 | 70 | 24.1 |
| NR 32/125B | 32 | 32 | 260 | 113 | - | 351 | 80 | 130 | 271 | 49.5 | 31.5 | 70.5 | 86 | 88 | - | M10 | 60 | 17.2 |
| NR 32/125A | 32 | 32 | 260 | 113 | - | 351 | 80 | 130 | 271 | 49.5 | 31.5 | 70.5 | 86 | 88 | - | M10 | 60 | 18.7 |
| NR 32/160B/A | 32 | 32 | 340 | 130 | - | 421 | 80 | 170 | 341 | 50 | 40 | 76 | 102 | 102 | - | M10 | 60 | 26.4 |
| NR 32/160A/A | 32 | 32 | 340 | 130 | - | 421 | 80 | 170 | 341 | 50 | 40 | 76 | 102 | 102 | - | M10 | 60 | 28.1 |
| NR 32/200B/A | 32 | 32 | 440 | 130 | - | 469 | 85 | 220 | 384 | 60 | 44 | 84 | 126 | 126 | - | M10 | 60 | 36.4 |
| NR 32/200A | 32 | 32 | 440 | 140 | - | 495 | 85 | 220 | 410 | 60 | 44 | 84 | 126 | 126 | - | M10 | 60 | 43 |
| NR 32/200S/A | 32 | 32 | 440 | 140 | - | 495 | 85 | 220 | 410 | 60 | 44 | 84 | 126 | 126 | - | M10 | 60 | - |
| NR 40/125C | 40 | 40 | 320 | 130 | - | 423 | 81 | 160 | 342 | 49 | 31 | 80 | 93 | 98 | - | M10 | 70 | 25.5 |
| NR 40/125B/A | 40 | 40 | 320 | 130 | - | 423 | 81 | 160 | 342 | 49 | 31 | 80 | 93 | 98 | - | M10 | 70 | 27.5 |
| NR 40/125A/A | 40 | 40 | 320 | 130 | - | 423 | 81 | 160 | 342 | 49 | 31 | 80 | 93 | 98 | - | M10 | 70 | 28.8 |
| NR 40/160B/A | 40 | 40 | 320 | 130 | - | 430 | 81 | 160 | 349 | 49 | 31 | 80 | 119 | 119 | - | M10 | 75 | 33.7 |
| NR 40/160A/A | 40 | 40 | 320 | 130 | - | 470 | 81 | 160 | 389 | 49 | 31 | 80 | 119 | 119 | - | M10 | 75 | 37.8 |
| NR 40/200B | 40 | 40 | 440 | 140 | - | 496 | 81 | 220 | 415 | 62 | 40 | 95 | 140 | 140 | - | M10 | 75 | 52.2 |
| NR 40/200A/A | 40 | 40 | 440 | 140 | - | 496 | 81 | 220 | 415 | 62 | 40 | 95 | 140 | 140 | - | M10 | 75 | 55.5 |
| NR 50/125F/A | 50 | 50 | 340 | 130 | - | 437 | 90 | 170 | 347 | 45 | 40 | 79 | 96 | 115 | - | M10 | 75 | 30.9 |
| NR 50/125C/A | 50 | 50 | 340 | 130 | - | 437 | 90 | 170 | 347 | 45 | 40 | 79 | 96 | 115 | - | M10 | 75 | 32.6 |
| NR 50/125A/B | 50 | 50 | 340 | 130 | - | 477 | 90 | 170 | 387 | 45 | 40 | 79 | 96 | 115 | - | M10 | 75 | 37.1 |
| NR 50/160C/B | 50 | 50 | 340 | 130 | - | 480 | 90 | 170 | 390 | 45 | 40 | 79 | 120 | 128 | - | M10 | 75 | 39.3 |
| NR 50/160B/A | 50 | 50 | 340 | 140 | - | 506 | 90 | 170 | 416 | 45 | 40 | 79 | 120 | 128 | - | M10 | 75 | 45.8 |
| NR 50/160A/B | 50 | 50 | 340 | 140 | - | 506 | 90 | 170 | 416 | 45 | 40 | 79 | 120 | 128 | - | M10 | 75 | 49.3 |
| NR 50/200D/B | 50 | 50 | 440 | 140 | - | 515 | 100 | 220 | 415 | 45 | 40 | 79 | 140 | 140 | - | M10 | 80 | 56.2 |
| NR 50/200B/A | 50 | 50 | 440 | 167 | - | 575.5 | 100 | 220 | 475.5 | 45 | 40 | 79 | 140 | 140 | - | M10 | 80 | 69.5 |
| NR 50/200A/A | 50 | 50 | 440 | 167 | - | 575.5 | 100 | 220 | 475.5 | 45 | 40 | 79 | 140 | 140 | - | M10 | 80 | 74.4 |
| NR 50/250C/B | 50 | 50 | 440 | 190 | - | 656 | 100 | 220 | 556 | 45 | 40 | 79 | 175 | 175 | - | M10 | 85 | - |
| NR 50/250B/A | 50 | 50 | 440 | 190 | - | 656 | 100 | 220 | 556 | 45 | 40 | 79 | 175 | 175 | - | M10 | 85 | 120.3 |
| NR 50/250A/B | 50 | 50 | 440 | 190 | - | 731 | 100 | 220 | 631 | 45 | 40 | 79 | 175 | 175 | - | M10 | 85 | 139.7 |
| NR 65/125F/B | 65 | 65 | 340 | 130 | - | 494 | 105 | 170 | 389 | 60 | 50 | 110 | 121 | 145 | - | M10 | 95 | 44.8 |
| NR 65/125D/A | 65 | 65 | 340 | 140 | - | 519 | 105 | 170 | 414 | 60 | 50 | 110 | 121 | 145 | - | M10 | 95 | 51 |
| NR 65/125A/B | 65 | 65 | 340 | 140 | - | 519 | 105 | 170 | 414 | 60 | 50 | 110 | 121 | 145 | - | M10 | 95 | 54.2 |
| NR 65/125S/B | 65 | 65 | 340 | 140 | - | 519 | 105 | 170 | 414 | 60 | 50 | 110 | 121 | 145 | - | M10 | 95 | 54.4 |
| NR 65/160B/A | 65 | 65 | 340 | 167 | - | 583.5 | 105 | 170 | 478.5 | 60 | 50 | 110 | 121 | 142 | - | M10 | 95 | 68.5 |
| NR 65/160A/A | 65 | 65 | 340 | 167 | - | 583.5 | 105 | 170 | 478.5 | 60 | 50 | 110 | 121 | 142 | - | M10 | 95 | 73.5 |
| NR 65/200B/B | 65 | 65 | 475 | 190 | - | 665 | 105 | 237.5 | 560 | 60 | 50 | 110 | 140 | 153 | - | M10 | 90 | 109.4 |
| NR 65/200A/A | 65 | 65 | 475 | 190 | - | 665 | 105 | 237.5 | 560 | 60 | 50 | 110 | 140 | 153 | - | M10 | 90 | 117.3 |
| NR 65/200S/B | 65 | 65 | 475 | 190 | - | 740 | 105 | 237.5 | 635 | 60 | 50 | 110 | 140 | 153 | - | M10 | 90 | 136.2 |
| NR 65/250C/A | 65 | 65 | 475 | 190 | - | 670 | 105 | 237.5 | 565 | 60 | 50 | 110 | 175 | 175 | - | M10 | 90 | 128 |
| NR 65/250B/B | 65 | 65 | 475 | 190 | - | 745 | 105 | 237.5 | 640 | 60 | 50 | 110 | 175 | 175 | - | M10 | 90 | - |
| NR 65/250A/C | 65 | 65 | 475 | 208 | - | 791 | 105 | 237.5 | 686 | 60 | 50 | 110 | 175 | 175 | - | M10 | 90 | - |
| NR 80/125E | 80 | 80 | 440 | 140 | - | 533 | 105 | 220 | 428 | 85 | 42.5 | 147.2 | 129 | 152 | - | M10 | 105 | 60.4 |
| NR 80/125C | 80 | 80 | 440 | 167 | - | 594.5 | 105 | 220 | 489.5 | 85 | 42.5 | 147.2 | 129 | 152 | - | M10 | 105 | 74.5 |
| NR 80/125A | 80 | 80 | 440 | 167 | - | 594.5 | 105 | 220 | 489.5 | 85 | 42.5 | 147.2 | 129 | 152 | - | M10 | 105 | 79.4 |
| NR 80/160D | 80 | 80 | 440 | 167 | - | 604.5 | 120 | 220 | 484.5 | 85 | 42.5 | 147.2 | 138 | 159 | - | M10 | 105 | 81.2 |
| NR 80/160C | 80 | 80 | 440 | 190 | - | 684 | 120 | 220 | 564 | 85 | 42.5 | 147.2 | 138 | 159 | - | M10 | 105 | - |
| NR 80/160B | 80 | 80 | 440 | 190 | - | 684 | 120 | 220 | 564 | 85 | 42.5 | 147.2 | 138 | 159 | - | M10 | 105 | 114.1 |
| NR 80/160AR | 80 | 80 | 440 | 190 | - | 759 | 120 | 220 | 639 | 85 | 42.5 | 147.2 | 138 | 159 | - | M10 | 105 | 132.5 |
| NR 80/160A | 80 | 80 | 440 | 190 | - | 759 | 120 | 220 | 639 | 85 | 42.5 | 147.2 | 138 | 159 | - | M10 | 105 | - |
| NR 80/200C | 80 | 80 | 500 | 190 | - | 792 | 150 | 250 | 642 | 85 | 42.5 | 147.2 | 156 | 177 | - | M10 | 105 | 144.7 |
| NR 80/200B | 80 | 80 | 500 | 208 | - | 843 | 150 | 250 | 693 | 85 | 42.5 | 147.2 | 156 | 177 | - | M10 | 105 | - |
| NR 80/200A | 80 | 80 | 500 | 208 | - | 843 | 150 | 250 | 693 | 85 | 42.5 | 147.2 | 156 | 177 | - | M10 | 105 | - |
| NR 80/250C | 80 | 80 | 620 | 208 | - | 846 | 150 | 310 | 696 | 85 | 42.5 | 147.2 | 179 | 192 | - | M10 | 120 | - |
| NRS 80/250B | 80 | 80 | 620 | 300 | - | 1138 | 150 | 310 | 988 | 85 | 42.5 | 147.2 | 179 | 192 | 400 | M10 | 120 | - |
| NRS 80/250A | 80 | 80 | 620 | 300 | - | 1138 | 150 | 310 | 988 | 85 | 42.5 | 147.2 | 179 | 192 | 400 | M10 | 120 | - |

### Flanges EN 1092-2

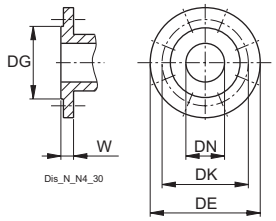


| mm | | | | | | | |
|---|---|---|---|---|---|---|---|
| DN | PN | DG | DK | DE | Holes | | W |
| | | | | | N° | ø | |
| 32 | 10-16 | 76 | 100 | 140 | 4 | 19 | 18 |
| 40 | 10-16 | 84 | 110 | 150 | 4 | 19 | 18 |
| 50 | 10-16 | 99 | 125 | 165 | 4 | 19 | 20 |
| 65 | 10-16 | 118 | 145 | 185 | 4 | 19 | 20 |
| 80 | 10-16 | 132 | 160 | 200 | 8 | 19 | 22 |
| 100 | 10-16 | 156 | 180 | 220 | 8 | 19 | 24 |
| 125 | 10-16 | 184 | 210 | 250 | 8 | 19 | 24 |

| TYPE | | | mm | | | | | | | | | | | | | | | kg |
|---|---|---|---|---|---|---|---|---|---|---|---|---|---|---|---|---|---|---|
| | DN1 | DN2 | a | AD | b | fM | h1 | h2 | h6 | j1 | j2 | j3 | l1 | l2 | s1 | x | | Weight |
| NRM 50D/A | 50 | 50 | 320 | 113 | 98 | 363.5 | 90 | 160 | 273.5 | - | - | - | 93 | 100 | M16 | 70 | | 22.2 |
| NRM 50C/A | 50 | 50 | 320 | 113 | 98 | 363.5 | 90 | 160 | 273.5 | - | - | - | 93 | 100 | M16 | 70 | | 24.1 |
| NRM 32/125B | 32 | 32 | 260 | 113 | - | 351 | 80 | 130 | 271 | 49.5 | 31.5 | 70.5 | 86 | 88 | M10 | 60 | | 17.5 |
| NRM 32/125A | 32 | 32 | 260 | 113 | - | 351 | 80 | 130 | 271 | 49.5 | 31.5 | 70.5 | 86 | 88 | M10 | 60 | | 18.5 |
| NRM 32/160B | 32 | 32 | 340 | 130 | - | 421 | 80 | 170 | 341 | 50 | 40 | 76 | 102 | 102 | M10 | 60 | | 27.8 |
| NRM 32/160A | 32 | 32 | 340 | 130 | - | 421 | 80 | 170 | 341 | 50 | 40 | 76 | 102 | 102 | M10 | 60 | | 28.4 |
| NRM 40/125C | 40 | 40 | 320 | 130 | - | 423 | 81 | 160 | 342 | 49 | 31 | 80 | 93 | 98 | M10 | 70 | | - |
| NRM 40/125B | 40 | 40 | 320 | 130 | - | 423 | 81 | 160 | 342 | 49 | 31 | 80 | 93 | 98 | M10 | 70 | | 28.7 |
| NRM 40/125A | 40 | 40 | 320 | 130 | - | 423 | 81 | 160 | 342 | 49 | 31 | 80 | 93 | 98 | M10 | 70 | | 29.3 |
| NRM 40/160B | 40 | 40 | 320 | 130 | - | 430 | 81 | 160 | 349 | 49 | 31 | 80 | 119 | 119 | M10 | 75 | | 34.6 |
| NRM 50/125F | 50 | 50 | 340 | 130 | - | 437 | 90 | 170 | 347 | 45 | 40 | 79 | 96 | 115 | M10 | 75 | | - |
| NRM 50/125C | 50 | 50 | 340 | 130 | - | 437 | 90 | 170 | 347 | 45 | 40 | 79 | 96 | 115 | M10 | 75 | | 32.3 |

# NR, NRS

## Dimensions and weights

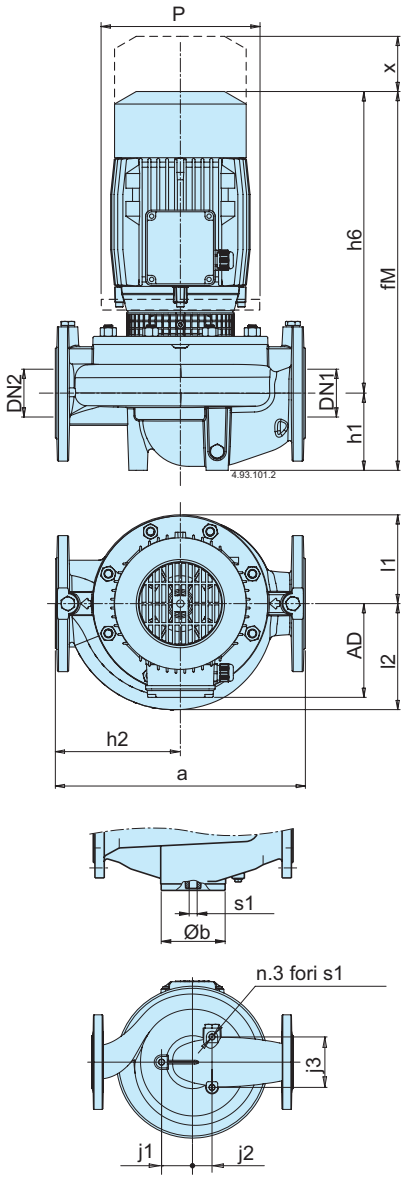


| TYPE | | | mm | | | | | | | | | | | | | | kg |
|---|---|---|---|---|---|---|---|---|---|---|---|---|---|---|---|---|---|
| | DN1 | DN2 | a | AD | b | fM | h1 | h2 | h6 | j1 | j2 | j3 | l1 | l2 | s1 | x | Weight |
| NR4 50C/A | 50 | 50 | 320 | 113 | 98 | 363.5 | 90 | 160 | 273.5 | - | - | - | 93 | 100 | M16 | 70 | 22 |
| NR4 50B/A | 50 | 50 | 320 | 113 | 98 | 363.5 | 90 | 160 | 273.5 | - | - | - | 93 | 100 | M16 | 70 | 21.9 |
| NR4 50A/A | 50 | 50 | 320 | 113 | 98 | 363.5 | 90 | 160 | 273.5 | - | - | - | 93 | 100 | M16 | 70 | 21.9 |
| NR4 65C/A | 65 | 65 | 360 | 113 | 118 | 373.5 | 100 | 180 | 273.5 | - | - | - | 102 | 114 | M16 | 70 | - |
| NR4 65B/A | 65 | 65 | 360 | 113 | 118 | 373.5 | 100 | 180 | 273.5 | - | - | - | 102 | 114 | M16 | 70 | 26.6 |
| NR4 65A/A | 65 | 65 | 360 | 113 | 118 | 373.5 | 100 | 180 | 273.5 | - | - | - | 102 | 114 | M16 | 70 | 27 |
| NR4 100C/B | 100 | 100 | 500 | 140 | 162 | 548 | 150 | 250 | 398 | - | - | - | 153 | 173 | M16 | 105 | 66.4 |
| NR4 100B/B | 100 | 100 | 500 | 140 | 162 | 548 | 150 | 250 | 398 | - | - | - | 153 | 173 | M16 | 105 | 66 |
| NR4 100A/B | 100 | 100 | 500 | 140 | 162 | 548 | 150 | 250 | 398 | - | - | - | 153 | 173 | M16 | 105 | 69.8 |
| NR4 125C/B | 125 | 125 | 600 | 167 | 194 | 639.5 | 170 | 300 | 469.5 | - | - | - | 172 | 195 | M16 | 120 | 100.4 |
| NR4 125B/A | 125 | 125 | 600 | 167 | 194 | 639.5 | 170 | 300 | 469.5 | - | - | - | 172 | 195 | M16 | 120 | 100.2 |
| NR4 125A/A | 125 | 125 | 600 | 167 | 194 | 639.5 | 170 | 300 | 469.5 | - | - | - | 172 | 195 | M16 | 120 | 107.4 |
| NR4 32/160B/A | 32 | 32 | 340 | 130 | - | 421 | 80 | 170 | 341 | 50 | 40 | 76 | 102 | 102 | M10 | 60 | 24 |
| NR4 32/160A/A | 32 | 32 | 340 | 130 | - | 421 | 80 | 170 | 341 | 50 | 40 | 76 | 102 | 102 | M10 | 60 | 24.2 |
| NR4 32/200C/A | 32 | 32 | 440 | 130 | - | 426 | 85 | 220 | 341 | 60 | 44 | 84 | 126 | 126 | M10 | 60 | 29.4 |
| NR4 32/200B/A | 32 | 32 | 440 | 130 | - | 426 | 85 | 220 | 341 | 60 | 44 | 84 | 126 | 126 | M10 | 60 | 31.4 |
| NR4 32/200A/A | 32 | 32 | 440 | 130 | - | 466 | 85 | 220 | 381 | 60 | 44 | 84 | 126 | 126 | M10 | 60 | 36.5 |
| NR4 40/160B/A | 40 | 40 | 320 | 130 | - | 430 | 81 | 160 | 349 | 49 | 31 | 80 | 119 | 119 | M10 | 75 | 30.5 |
| NR4 40/160A/A | 40 | 40 | 320 | 130 | - | 430 | 81 | 160 | 349 | 49 | 31 | 80 | 119 | 119 | M10 | 75 | 30.7 |
| NR4 40/200B/A | 40 | 40 | 440 | 130 | - | 430 | 81 | 220 | 349 | 62 | 40 | 95 | 140 | 140 | M10 | 75 | 40.1 |
| NR4 40/200A/A | 40 | 40 | 440 | 130 | - | 470 | 81 | 220 | 389 | 62 | 40 | 95 | 140 | 140 | M10 | 75 | 45.6 |
| NR4 50/160C/A | 50 | 50 | 340 | 130 | - | 440 | 90 | 170 | 350 | 45 | 40 | 79 | 120 | 128 | M10 | 75 | 32.3 |
| NR4 50/160B/A | 50 | 50 | 340 | 130 | - | 440 | 90 | 170 | 350 | 45 | 40 | 79 | 120 | 128 | M10 | 75 | 33.9 |
| NR4 50/160A/B | 50 | 50 | 340 | 130 | - | 480 | 90 | 170 | 390 | 45 | 40 | 79 | 120 | 128 | M10 | 75 | 39.3 |
| NR4 50/200B/B | 50 | 50 | 440 | 140 | - | 515 | 100 | 220 | 415 | 45 | 40 | 79 | 140 | 140 | M10 | 80 | 52.2 |
| NR4 50/200A/B | 50 | 50 | 440 | 140 | - | 515 | 100 | 220 | 415 | 45 | 40 | 79 | 140 | 140 | M10 | 80 | 52.6 |
| NR4 50/250C/B | 50 | 50 | 440 | 140 | - | 516 | 100 | 220 | 416 | 45 | 40 | 79 | 175 | 175 | M10 | 85 | 68.8 |
| NR4 50/250B/B | 50 | 50 | 440 | 167 | - | 576.5 | 100 | 220 | 476.5 | 45 | 40 | 79 | 175 | 175 | M10 | 85 | 81.5 |
| NR4 50/250A/A | 50 | 50 | 440 | 167 | - | 576.5 | 100 | 220 | 476.5 | 45 | 40 | 79 | 175 | 175 | M10 | 85 | 81.9 |
| NR4 65/125F/A | 65 | 65 | 340 | 130 | - | 454 | 105 | 170 | 349 | 60 | 50 | 110 | 121 | 145 | M10 | 95 | 37.5 |
| NR4 65/125D/A | 65 | 65 | 340 | 130 | - | 454 | 105 | 170 | 349 | 60 | 50 | 110 | 121 | 145 | M10 | 95 | 39.3 |
| NR4 65/125A/B | 65 | 65 | 340 | 130 | - | 494 | 105 | 170 | 389 | 60 | 50 | 110 | 121 | 145 | M10 | 95 | 44.7 |
| NR4 65/125S/B | 65 | 65 | 340 | 130 | - | 494 | 105 | 170 | 389 | 60 | 50 | 110 | 121 | 145 | M10 | 95 | 45 |
| NR4 65/160B/B | 65 | 65 | 340 | 140 | - | 522 | 105 | 170 | 417 | 60 | 50 | 110 | 121 | 142 | M10 | 95 | 50.2 |
| NR4 65/160A/B | 65 | 65 | 340 | 140 | - | 522 | 105 | 170 | 417 | 60 | 50 | 110 | 121 | 142 | M10 | 95 | 50.4 |
| NR4 65/200C/B | 65 | 65 | 475 | 140 | - | 535 | 105 | 237.5 | 430 | 60 | 50 | 110 | 140 | 153 | M10 | 90 | 60 |
| NR4 65/200B/B | 65 | 65 | 475 | 140 | - | 535 | 105 | 237.5 | 430 | 60 | 50 | 110 | 140 | 153 | M10 | 90 | 63.4 |
| NR4 65/200A/B | 65 | 65 | 475 | 167 | - | 585.5 | 105 | 237.5 | 480.5 | 60 | 50 | 110 | 140 | 153 | M10 | 90 | 74.1 |
| NR4 65/250D/B | 65 | 65 | 475 | 167 | - | 585.5 | 105 | 237.5 | 480.5 | 60 | 50 | 110 | 175 | 175 | M10 | 90 | - |
| NR4 65/250C/B | 65 | 65 | 475 | 167 | - | 585.5 | 105 | 237.5 | 480.5 | 60 | 50 | 110 | 175 | 175 | M10 | 90 | 86.4 |
| NR4 65/250B/A | 65 | 65 | 475 | 167 | - | 585.5 | 105 | 237.5 | 480.5 | 60 | 50 | 110 | 175 | 175 | M10 | 90 | - |
| NR4 65/250A/A | 65 | 65 | 475 | 167 | - | 585.5 | 105 | 237.5 | 480.5 | 60 | 50 | 110 | 175 | 175 | M10 | 90 | 94.1 |
| NR4 80/160C | 80 | 80 | 440 | 140 | - | 543 | 120 | 220 | 423 | 85 | 42.5 | 147.2 | 138 | 159 | M10 | 105 | 58 |
| NR4 80/160B | 80 | 80 | 440 | 140 | - | 543 | 120 | 220 | 423 | 85 | 42.5 | 147.2 | 138 | 159 | M10 | 105 | 57.8 |
| NR4 80/160A | 80 | 80 | 440 | 140 | - | 543 | 120 | 220 | 423 | 85 | 42.5 | 147.2 | 138 | 159 | M10 | 105 | 61.8 |
| NR4 80/160S | 80 | 80 | 440 | 167 | - | 604.5 | 120 | 220 | 484.5 | 85 | 42.5 | 147.2 | 138 | 159 | M10 | 105 | 73.4 |
| NR4 80/200B | 80 | 80 | 500 | 167 | - | 637.5 | 150 | 250 | 487.5 | 85 | 42.5 | 147.2 | 156 | 177 | M10 | 105 | 82.3 |
| NR4 80/200A | 80 | 80 | 500 | 167 | - | 637.5 | 150 | 250 | 487.5 | 85 | 42.5 | 147.2 | 156 | 177 | M10 | 105 | 82.5 |
| NR4 80/250B | 80 | 80 | 620 | 167 | - | 656 | 150 | 310 | 506 | 85 | 42.5 | 147.2 | 179 | 192 | M10 | 120 | - |
| NR4 80/250A | 80 | 80 | 620 | 190 | - | 725 | 150 | 310 | 575 | 85 | 42.5 | 147.2 | 179 | 192 | M10 | 120 | - |

| TYPE | | | mm | | | | | | | | | | | kg |
|---|---|---|---|---|---|---|---|---|---|---|---|---|---|---|
| | DN1 | DN2 | a | AD | b | fM | h1 | h2 | h6 | l1 | l2 | s1 | x | Weight |
| NR4M 50C/A | 50 | 50 | 320 | 113 | 98 | 363.5 | 90 | 160 | 273.5 | 93 | 100 | M16 | 70 | - |
| NR4M 50B/A | 50 | 50 | 320 | 113 | 98 | 363.5 | 90 | 160 | 273.5 | 93 | 100 | M16 | 70 | 23.5 |
| NR4M 50A/A | 50 | 50 | 320 | 113 | 98 | 363.5 | 90 | 160 | 273.5 | 93 | 100 | M16 | 70 | 23.5 |
| NR4M 65C/A | 65 | 65 | 360 | 113 | 118 | 373.5 | 100 | 180 | 273.5 | 102 | 114 | M16 | 70 | - |

### Flanges EN 1092-2

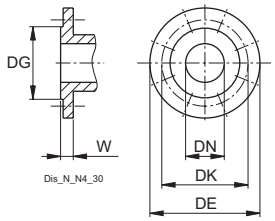


| mm | | | | | | | |
|---|---|---|---|---|---|---|---|
| DN | PN | DG | DK | DE | Holes | | W |
| | | | | | N° | ø | |
| 32 | 10-16 | 76 | 100 | 140 | 4 | 19 | 18 |
| 40 | 10-16 | 84 | 110 | 150 | 4 | 19 | 18 |
| 50 | 10-16 | 99 | 125 | 165 | 4 | 19 | 20 |
| 65 | 10-16 | 118 | 145 | 185 | 4 | 19 | 20 |
| 80 | 10-16 | 132 | 160 | 200 | 8 | 19 | 22 |
| 100 | 10-16 | 156 | 180 | 220 | 8 | 19 | 24 |
| 125 | 10-16 | 184 | 210 | 250 | 8 | 19 | 24 |

# NR, NRS

## Dimensions and weights

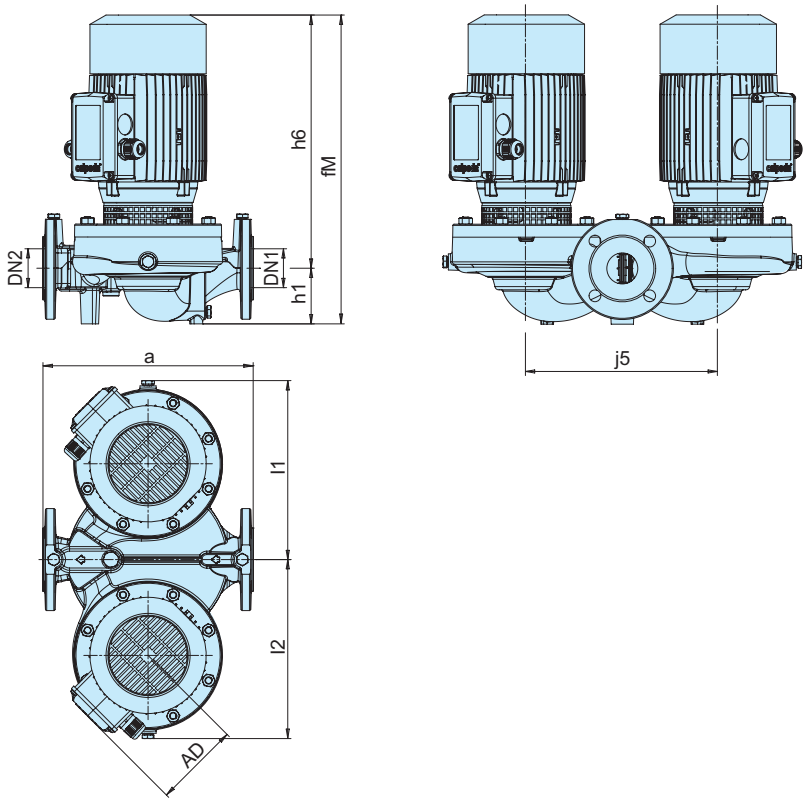


| TYPE | | | mm | | | | | | | | kg |
|---|---|---|---|---|---|---|---|---|---|---|---|
| | DN1 | DN2 | a | AD | fM | h1 | h6 | j5 | l1 | l2 | Weight |
| **NRD 50/125F** | 50 | 50 | 340 | 130 | 433.5 | 90 | 343.5 | 310 | 278.5 | 278.5 | 62.7 |
| **NRD 50/125C** | 50 | 50 | 340 | 130 | 433.5 | 90 | 343.5 | 310 | 278.5 | 278.5 | 66.2 |
| **NRD 50/125A** | 50 | 50 | 340 | 130 | 473.5 | 90 | 383.5 | 310 | 278.5 | 278.5 | 72 |
| **NRD 50/160C** | 50 | 50 | 340 | 130 | 473.5 | 90 | 383.5 | 310 | 291.5 | 291.5 | 79 |
| **NRD 50/160B** | 50 | 50 | 340 | 139 | 499.5 | 90 | 409.5 | 310 | 291.5 | 291.5 | 91.8 |
| **NRD 50/160A** | 50 | 50 | 340 | 139 | 499.5 | 90 | 409.5 | 310 | 291.5 | 291.5 | 101.5 |
| **NRD 65/125F** | 65 | 65 | 340 | 128 | 488.5 | 105 | 383.5 | 310 | 303.5 | 303.5 | 86.8 |
| **NRD 65/125D** | 65 | 65 | 340 | 138 | 514.5 | 105 | 409.5 | 310 | 303.5 | 303.5 | 99.6 |
| **NRD 65/125A** | 65 | 65 | 340 | 138 | 514.5 | 105 | 409.5 | 310 | 303.5 | 303.5 | 106.2 |
| **NRD 65/160B** | 65 | 65 | 340 | 160 | 543.5 | 105 | 438.5 | 310 | 303.5 | 303.5 | - |
| **NRD 65/160A** | 65 | 65 | 340 | 160 | 543.5 | 105 | 438.5 | 310 | 303.5 | 303.5 | 147.5 |

| TYPE | | | mm | | | | | | | | kg |
|---|---|---|---|---|---|---|---|---|---|---|---|
| | DN1 | DN2 | a | AD | fM | h1 | h6 | j5 | l1 | l2 | Weight |
| **NRD4 50/160C** | 50 | 50 | 340 | 130 | 433.5 | 90 | 343.5 | 310 | 291.5 | 291.5 | 65.5 |
| **NRD4 50/160B** | 50 | 50 | 340 | 130 | 433.5 | 90 | 343.5 | 310 | 291.5 | 291.5 | 69.2 |
| **NRD4 50/160A** | 50 | 50 | 340 | 130 | 473.5 | 90 | 383.5 | 310 | 291.5 | 291.5 | 79.5 |
| **NRD4 65/125F** | 65 | 65 | 340 | 130 | 448.5 | 105 | 343.5 | 310 | 303.5 | 303.5 | - |
| **NRD4 65/125D** | 65 | 65 | 340 | 130 | 448.5 | 105 | 343.5 | 310 | 303.5 | 303.5 | 76.3 |
| **NRD4 65/125A** | 65 | 65 | 340 | 130 | 488.5 | 105 | 383.5 | 310 | 303.5 | 303.5 | 87.5 |
| **NRD4 65/160B** | 65 | 65 | 340 | 138 | 514.5 | 105 | 409.5 | 310 | 303.5 | 303.5 | - |
| **NRD4 65/160A** | 65 | 65 | 340 | 138 | 514.5 | 105 | 409.5 | 310 | 303.5 | 303.5 | - |

### Flanges EN 1092-2

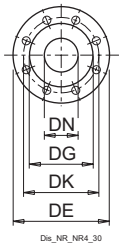


| mm | | | | | | | |
|---|---|---|---|---|---|---|---|
| DN | PN | DG | DK | DE | Holes | | W |
| | | | | | N° | ø | |
| 32 | 10-16 | 76 | 100 | 140 | 4 | 19 | 18 |
| 40 | 10-16 | 84 | 110 | 150 | 4 | 19 | 18 |
| 50 | 10-16 | 99 | 125 | 165 | 4 | 19 | 20 |
| 65 | 10-16 | 118 | 145 | 185 | 4 | 19 | 20 |
| 80 | 10-16 | 132 | 160 | 200 | 8 | 19 | 22 |
| 100 | 10-16 | 156 | 180 | 220 | 8 | 19 | 24 |
| 125 | 10-16 | 184 | 210 | 250 | 8 | 19 | 24 |

# NR, NRS

## Dimensions and weights

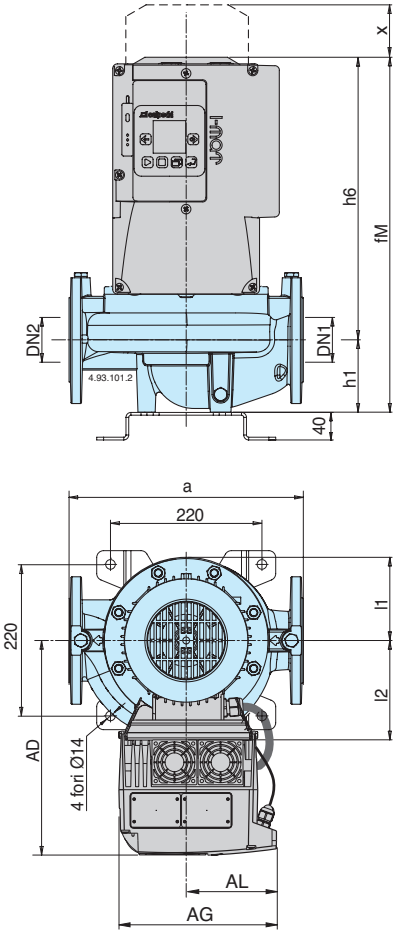


| TYPE | | | mm | | | | | | | | | | | kg |
|---|---|---|---|---|---|---|---|---|---|---|---|---|---|---|
| | DN1 | DN2 | a | AD | AG | AL | fM | h1 | h2 | h6 | l1 | l2 | x | Weight |
| NR EI 50D/A | 50 | 50 | 320 | 266 | 190 | 105 | 363.5 | 90 | 160 | 273.5 | 93 | 100 | 70 | 29.3 |
| NR EI 50C/B | 50 | 50 | 320 | 266 | 190 | 105 | 363.5 | 90 | 160 | 273.5 | 93 | 100 | 70 | 32.3 |
| NR EI 32/125B | 32 | 32 | 260 | 266 | 190 | 105 | 351 | 80 | 130 | 271 | 86 | 88 | 60 | 24.8 |
| NR EI 32/125A | 32 | 32 | 260 | 266 | 190 | 105 | 351 | 80 | 130 | 271 | 86 | 88 | 60 | - |
| NR EI 32/160B/A | 32 | 32 | 340 | 285 | 190 | 105 | 421 | 80 | 170 | 341 | 102 | 102 | 60 | 35 |
| NR EI 32/160A/A | 32 | 32 | 340 | 285 | 190 | 105 | 421 | 80 | 170 | 341 | 102 | 102 | 60 | 36.2 |
| NR EI 32/200B/A | 32 | 32 | 440 | 285 | 210 | 117.5 | 469 | 85 | 220 | 384 | 126 | 126 | 60 | - |
| NR EI 32/200A | 32 | 32 | 440 | 295 | 210 | 117.5 | 495 | 85 | 220 | 410 | 126 | 126 | 60 | 52.3 |
| NR EI 32/200S/A | 32 | 32 | 440 | 295 | 210 | 117.5 | 495 | 85 | 220 | 410 | 126 | 126 | 60 | - |
| NR EI 40/125C | 40 | 40 | 320 | 285 | 190 | 105 | 423 | 81 | 160 | 342 | 93 | 98 | 70 | 34 |
| NR EI 40/125B/A | 40 | 40 | 320 | 285 | 190 | 105 | 423 | 81 | 160 | 342 | 93 | 98 | 70 | 36 |
| NR EI 40/125A/A | 40 | 40 | 320 | 285 | 190 | 105 | 423 | 81 | 160 | 342 | 93 | 98 | 70 | 37.4 |
| NR EI 40/160B/A | 40 | 40 | 320 | 285 | 190 | 105 | 430 | 81 | 160 | 349 | 119 | 119 | 75 | 42.4 |
| NR EI 40/160A/A | 40 | 40 | 320 | 285 | 210 | 117.5 | 470 | 81 | 160 | 389 | 119 | 119 | 75 | 47 |
| NR EI 40/200B | 40 | 40 | 440 | 295 | 210 | 117.5 | 496 | 81 | 220 | 415 | 140 | 140 | 75 | 64 |
| NR EI 40/200A/A | 40 | 40 | 440 | 295 | 210 | 117.5 | 496 | 81 | 220 | 415 | 140 | 140 | 75 | 66.7 |
| NR EI 50/125F/A | 50 | 50 | 340 | 285 | 190 | 105 | 437 | 90 | 170 | 347 | 96 | 115 | 75 | 39 |
| NR EI 50/125C/A | 50 | 50 | 340 | 285 | 190 | 105 | 437 | 90 | 170 | 347 | 96 | 115 | 75 | 40.3 |
| NR EI 50/125A/B | 50 | 50 | 340 | 285 | 210 | 117.5 | 477 | 90 | 170 | 387 | 96 | 115 | 75 | 47.5 |
| NR EI 50/160C/B | 50 | 50 | 340 | 285 | 210 | 117.5 | 480 | 90 | 170 | 390 | 120 | 128 | 75 | 49 |
| NR EI 50/160B/A | 50 | 50 | 340 | 295 | 210 | 117.5 | 506 | 90 | 170 | 416 | 120 | 128 | 75 | 55.2 |
| NR EI 50/160A/B | 50 | 50 | 340 | 295 | 210 | 117.5 | 506 | 90 | 170 | 416 | 120 | 128 | 75 | 58.8 |
| NR EI 50/200D/B | 50 | 50 | 440 | 295 | 210 | 117.5 | 515 | 100 | 220 | 415 | 140 | 140 | 80 | - |
| NR EI 50/200B/A | 50 | 50 | 440 | 324 | 210 | 117.5 | 576 | 100 | 220 | 476 | 140 | 140 | 80 | - |
| NR EI 50/200A/A | 50 | 50 | 440 | 366 | 281 | 153.5 | 576 | 100 | 220 | 476 | 140 | 140 | 80 | - |
| NR EI 50/250C/B | 50 | 50 | 440 | 389 | 281 | 153.5 | 656 | 100 | 220 | 556 | 175 | 175 | 85 | - |
| NR EI 50/250B/A | 50 | 50 | 440 | 389 | 281 | 153.5 | 656 | 100 | 220 | 556 | 175 | 175 | 85 | - |
| NR EI 50/250A/B | 50 | 50 | 440 | 469 | 350 | 190 | 731 | 100 | 220 | 631 | 175 | 175 | 85 | - |
| NR EI 65/125F/B | 65 | 65 | 340 | 285 | 210 | 117.5 | 494 | 105 | 170 | 389 | 121 | 145 | 95 | 53.9 |
| NR EI 65/125D/A | 65 | 65 | 340 | 295 | 210 | 117.5 | 519 | 105 | 170 | 414 | 121 | 145 | 95 | 60.8 |
| NR EI 65/125A/B | 65 | 65 | 340 | 295 | 210 | 117.5 | 519 | 105 | 170 | 414 | 121 | 145 | 95 | 64.3 |
| NR EI 65/125S/B | 65 | 65 | 340 | 295 | 210 | 117.5 | 519 | 105 | 170 | 414 | 121 | 145 | 95 | 63.8 |
| NR EI 65/160B/A | 65 | 65 | 340 | 324 | 210 | 117.5 | 584 | 105 | 170 | 479 | 121 | 142 | 95 | 74.5 |
| NR EI 65/160A/A | 65 | 65 | 340 | 366 | 281 | 153.5 | 584 | 105 | 170 | 479 | 121 | 142 | 95 | 90.3 |
| NR EI 65/200B/B | 65 | 65 | 475 | 389 | 281 | 153.5 | 665 | 105 | 237.5 | 560 | 140 | 153 | 90 | 125 |
| NR EI 65/200A/A | 65 | 65 | 475 | 389 | 281 | 153.5 | 665 | 105 | 237.5 | 560 | 140 | 153 | 90 | - |
| NR EI 65/200S/B | 65 | 65 | 475 | 469 | 350 | 190 | 740 | 105 | 237.5 | 635 | 140 | 153 | 90 | - |
| NR EI 65/250C/A | 65 | 65 | 475 | 389 | 281 | 153.5 | 670 | 105 | 237.5 | 565 | 175 | 175 | 90 | - |
| NR EI 65/250B/B | 65 | 65 | 475 | 469 | 350 | 190 | 745 | 105 | 237.5 | 640 | 175 | 175 | 90 | - |
| NR EI 65/250A/C | 65 | 65 | 475 | 488 | 350 | 190 | 791 | 105 | 237.5 | 686 | 175 | 175 | 90 | - |
| NR EI 80/125E | 80 | 80 | 440 | 295 | 210 | 117.5 | 533 | 105 | 220 | 428 | 129 | 152 | 105 | - |
| NR EI 80/125C | 80 | 80 | 440 | 324 | 210 | 117.5 | 595 | 105 | 220 | 490 | 129 | 152 | 105 | 84 |
| NR EI 80/125A | 80 | 80 | 440 | 366 | 281 | 153.5 | 595 | 105 | 220 | 490 | 129 | 152 | 105 | - |
| NR EI 80/160D | 80 | 80 | 440 | 366 | 281 | 153.5 | 605 | 120 | 220 | 485 | 138 | 159 | 105 | - |
| NR EI 80/160C | 80 | 80 | 440 | 389 | 281 | 153.5 | 684 | 120 | 220 | 564 | 138 | 159 | 105 | - |
| NR EI 80/160B | 80 | 80 | 440 | 389 | 281 | 153.5 | 684 | 120 | 220 | 564 | 138 | 159 | 105 | - |
| NR EI 80/160A | 80 | 80 | 440 | 469 | 350 | 190 | 759 | 120 | 220 | 639 | 138 | 159 | 105 | - |
| NR EI 80/160AR | 80 | 80 | 440 | 469 | 350 | 190 | 759 | 120 | 220 | 639 | 138 | 159 | 105 | - |
| NR EI 80/200C | 80 | 80 | 500 | 469 | 350 | 190 | 792 | 150 | 250 | 642 | 156 | 177 | 105 | - |
| NR EI 80/200B | 80 | 80 | 500 | 488 | 350 | 190 | 843 | 150 | 250 | 693 | 156 | 177 | 105 | - |
| NR EI 80/200A | 80 | 80 | 500 | 488 | 350 | 190 | 843 | 150 | 250 | 693 | 156 | 177 | 105 | - |
| NR EI 80/250C | 80 | 80 | 620 | 488 | 350 | 190 | 846 | 150 | 310 | 696 | 179 | 192 | 120 | - |

### Flanges EN 1092-2

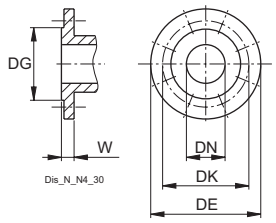


| mm | | | | | | | |
|---|---|---|---|---|---|---|---|
| DN | PN | DG | DK | DE | Holes | | W |
| | | | | | N° | ø | |
| 32 | 10-16 | 76 | 100 | 140 | 4 | 19 | 18 |
| 40 | 10-16 | 84 | 110 | 150 | 4 | 19 | 18 |
| 50 | 10-16 | 99 | 125 | 165 | 4 | 19 | 20 |
| 65 | 10-16 | 118 | 145 | 185 | 4 | 19 | 20 |
| 80 | 10-16 | 132 | 160 | 200 | 8 | 19 | 22 |
| 100 | 10-16 | 156 | 180 | 220 | 8 | 19 | 24 |
| 125 | 10-16 | 184 | 210 | 250 | 8 | 19 | 24 |

# NR, NRS

## Dimensions and weights

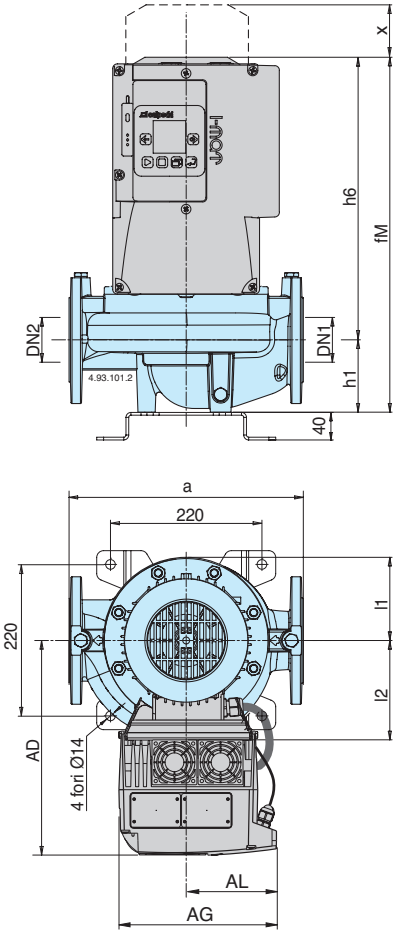


| TYPE | | | mm | | | | | | | | | | | kg |
|---|---|---|---|---|---|---|---|---|---|---|---|---|---|---|
| | DN1 | DN2 | a | AD | AG | AL | fM | h1 | h2 | h6 | l1 | l2 | x | Weight |
| NR4 EI 50C/A | 50 | 50 | 320 | 266 | 190 | 105 | 363.5 | 90 | 160 | 273.5 | 93 | 100 | 70 | - |
| NR4 EI 50B/A | 50 | 50 | 320 | 266 | 190 | 105 | 363.5 | 90 | 160 | 273.5 | 93 | 100 | 70 | - |
| NR4 EI 50A/A | 50 | 50 | 320 | 266 | 190 | 105 | 363.5 | 90 | 160 | 273.5 | 93 | 100 | 70 | - |
| NR4 EI 65C/A | 65 | 65 | 360 | 266 | 190 | 105 | 373.5 | 100 | 180 | 273.5 | 102 | 114 | 70 | - |
| NR4 EI 65B/A | 65 | 65 | 360 | 266 | 190 | 105 | 373.5 | 100 | 180 | 273.5 | 102 | 114 | 70 | - |
| NR4 EI 65A/A | 65 | 65 | 360 | 266 | 190 | 105 | 373.5 | 100 | 180 | 273.5 | 102 | 114 | 70 | 37 |
| NR4 EI 100C/B | 100 | 100 | 500 | 295 | 190 | 105 | 548 | 150 | 250 | 398 | 153 | 173 | 105 | - |
| NR4 EI 100B/B | 100 | 100 | 500 | 295 | 190 | 105 | 548 | 150 | 250 | 398 | 153 | 173 | 105 | 76 |
| NR4 EI 100A/B | 100 | 100 | 500 | 295 | 190 | 105 | 548 | 150 | 250 | 398 | 153 | 173 | 105 | - |
| NR4 EI 125C/B | 125 | 125 | 600 | 324 | 210 | 117.5 | 640 | 170 | 300 | 470 | 172 | 195 | 120 | 112 |
| NR4 EI 125B/A | 125 | 125 | 600 | 324 | 210 | 117.5 | 640 | 170 | 300 | 470 | 172 | 195 | 120 | 112 |
| NR4 EI 125A/A | 125 | 125 | 600 | 324 | 210 | 117.5 | 640 | 170 | 300 | 470 | 172 | 195 | 120 | - |
| NR4 EI 32/160B/A | 32 | 32 | 340 | 285 | 190 | 105 | 421 | 80 | 170 | 341 | 102 | 102 | 60 | 34.6 |
| NR4 EI 32/160A/A | 32 | 32 | 340 | 285 | 190 | 105 | 421 | 80 | 170 | 341 | 102 | 102 | 60 | - |
| NR4 EI 32/200C/A | 32 | 32 | 440 | 285 | 190 | 105 | 426 | 85 | 220 | 341 | 126 | 126 | 60 | - |
| NR4 EI 32/200B/A | 32 | 32 | 440 | 285 | 190 | 105 | 426 | 85 | 220 | 341 | 126 | 126 | 60 | - |
| NR4 EI 32/200A/A | 32 | 32 | 440 | 285 | 190 | 105 | 466 | 85 | 220 | 381 | 126 | 126 | 60 | - |
| NR4 EI 40/160B/A | 40 | 40 | 320 | 285 | 190 | 105 | 430 | 81 | 160 | 349 | 119 | 119 | 75 | 40 |
| NR4 EI 40/160A/A | 40 | 40 | 320 | 285 | 190 | 105 | 430 | 81 | 160 | 349 | 119 | 119 | 75 | - |
| NR4 EI 40/200B/A | 40 | 40 | 440 | 285 | 190 | 105 | 430 | 81 | 220 | 349 | 140 | 140 | 75 | - |
| NR4 EI 40/200A/A | 40 | 40 | 440 | 285 | 190 | 105 | 470 | 81 | 220 | 389 | 140 | 140 | 75 | - |
| NR4 EI 50/160C/A | 50 | 50 | 340 | 285 | 190 | 105 | 440 | 90 | 170 | 350 | 120 | 128 | 75 | - |
| NR4 EI 50/160B/A | 50 | 50 | 340 | 285 | 190 | 105 | 440 | 90 | 170 | 350 | 120 | 128 | 75 | - |
| NR4 EI 50/160A/B | 50 | 50 | 340 | 285 | 190 | 105 | 480 | 90 | 170 | 390 | 120 | 128 | 75 | 48.1 |
| NR4 EI 50/200B/B | 50 | 50 | 440 | 295 | 190 | 105 | 515 | 100 | 220 | 415 | 140 | 140 | 80 | - |
| NR4 EI 50/200A/B | 50 | 50 | 440 | 295 | 190 | 105 | 515 | 100 | 220 | 415 | 140 | 140 | 80 | - |
| NR4 EI 50/250C/B | 50 | 50 | 440 | 295 | 190 | 105 | 516 | 100 | 220 | 416 | 175 | 175 | 85 | 77.3 |
| NR4 EI 50/250B/B | 50 | 50 | 440 | 324 | 210 | 117.5 | 577 | 100 | 220 | 477 | 175 | 175 | 85 | 93.5 |
| NR4 EI 50/250A/A | 50 | 50 | 440 | 324 | 210 | 117.5 | 577 | 100 | 220 | 477 | 175 | 175 | 85 | - |
| NR4 EI 65/125F/A | 65 | 65 | 340 | 285 | 190 | 105 | 454 | 105 | 170 | 349 | 121 | 145 | 95 | - |
| NR4 EI 65/125D/A | 65 | 65 | 340 | 285 | 190 | 105 | 454 | 105 | 170 | 349 | 121 | 145 | 95 | - |
| NR4 EI 65/125A/B | 65 | 65 | 340 | 285 | 190 | 105 | 494 | 105 | 170 | 389 | 121 | 145 | 95 | - |
| NR4 EI 65/125S/B | 65 | 65 | 340 | 285 | 190 | 105 | 494 | 105 | 170 | 389 | 121 | 145 | 95 | 54 |
| NR4 EI 65/160B/B | 65 | 65 | 340 | 295 | 190 | 105 | 522 | 105 | 170 | 417 | 121 | 142 | 95 | - |
| NR4 EI 65/160A/B | 65 | 65 | 340 | 295 | 190 | 105 | 522 | 105 | 170 | 417 | 121 | 142 | 95 | 59 |
| NR4 EI 65/200C/B | 65 | 65 | 475 | 295 | 190 | 105 | 535 | 105 | 237.5 | 430 | 140 | 153 | 90 | - |
| NR4 EI 65/200B/B | 65 | 65 | 475 | 295 | 190 | 105 | 535 | 105 | 237.5 | 430 | 140 | 153 | 90 | - |
| NR4 EI 65/200A/B | 65 | 65 | 475 | 324 | 210 | 117.5 | 586 | 105 | 237.5 | 481 | 140 | 153 | 90 | - |
| NR4 EI 65/250D/B | 65 | 65 | 475 | 324 | 210 | 117.5 | 586 | 105 | 237.5 | 481 | 175 | 175 | 90 | - |
| NR4 EI 65/250C/B | 65 | 65 | 475 | 324 | 210 | 117.5 | 586 | 105 | 237.5 | 481 | 175 | 175 | 90 | - |
| NR4 EI 65/250B/A | 65 | 65 | 475 | 324 | 210 | 117.5 | 586 | 105 | 237.5 | 481 | 175 | 175 | 90 | - |
| NR4 EI 65/250A/A | 65 | 65 | 475 | 324 | 210 | 117.5 | 586 | 105 | 237.5 | 481 | 175 | 175 | 90 | 108 |
| NR4 EI 80/160C | 80 | 80 | 440 | 295 | 190 | 105 | 543 | 120 | 220 | 423 | 138 | 159 | 105 | - |
| NR4 EI 80/160B | 80 | 80 | 440 | 295 | 190 | 105 | 543 | 120 | 220 | 423 | 138 | 159 | 105 | - |
| NR4 EI 80/160A | 80 | 80 | 440 | 295 | 190 | 105 | 543 | 120 | 220 | 423 | 138 | 159 | 105 | - |
| NR4 EI 80/160S | 80 | 80 | 440 | 324 | 210 | 117.5 | 605 | 120 | 220 | 485 | 138 | 159 | 105 | - |
| NR4 EI 80/200B | 80 | 80 | 500 | 324 | 210 | 117.5 | 638 | 150 | 250 | 488 | 156 | 177 | 105 | - |
| NR4 EI 80/200A | 80 | 80 | 500 | 324 | 210 | 117.5 | 638 | 150 | 250 | 488 | 156 | 177 | 105 | - |
| NR4 EI 80/250B | 80 | 80 | 620 | 324 | 210 | 117.5 | 656 | 150 | 310 | 506 | 179 | 192 | 120 | - |
| NR4 EI 80/250A | 80 | 80 | 620 | 389 | 281 | 153.5 | 725 | 150 | 310 | 575 | 179 | 192 | 120 | - |

## Flanges EN 1092-2

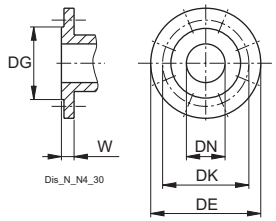


| mm | | | | | | | |
|---|---|---|---|---|---|---|---|
| DN | PN | DG | DK | DE | Holes | | W |
| | | | | | N° | ø | |
| 32 | 10-16 | 76 | 100 | 140 | 4 | 19 | 18 |
| 40 | 10-16 | 84 | 110 | 150 | 4 | 19 | 18 |
| 50 | 10-16 | 99 | 125 | 165 | 4 | 19 | 20 |
| 65 | 10-16 | 118 | 145 | 185 | 4 | 19 | 20 |
| 80 | 10-16 | 132 | 160 | 200 | 8 | 19 | 22 |
| 100 | 10-16 | 156 | 180 | 220 | 8 | 19 | 24 |
| 125 | 10-16 | 184 | 210 | 250 | 8 | 19 | 24 |

# NR, NRS

## Dimensions and weights

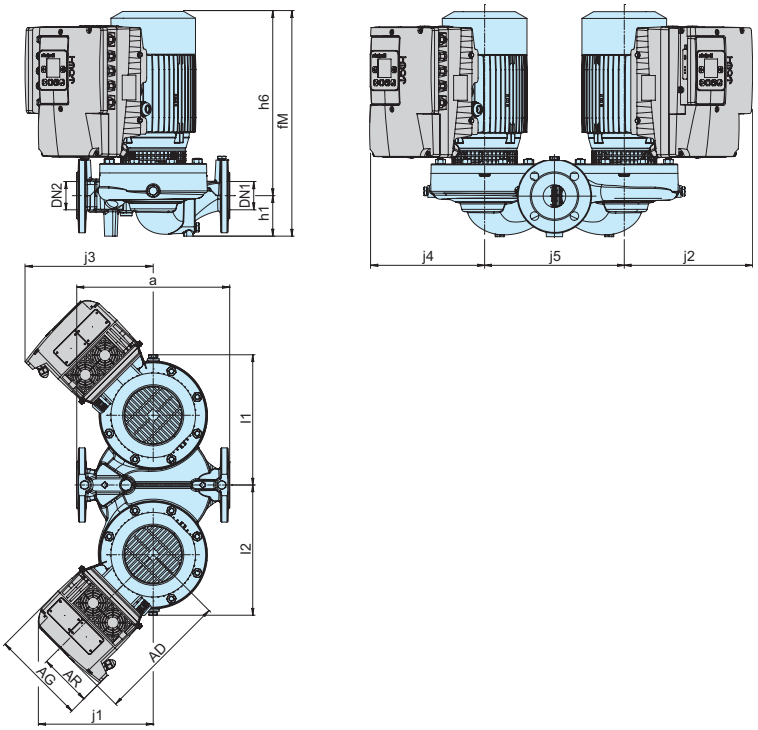


| TYPE | | | mm | | | | | | | | | | | | | | kg |
|---|---|---|---|---|---|---|---|---|---|---|---|---|---|---|---|---|---|
| | DN1 | DN2 | a | AD | AG | AR | fM | h1 | h6 | j1 | j2 | j3 | j4 | j5 | l1 | l2 | Weight |
| **NRD EI 50/125F** | 50 | 50 | 340 | 284 | 190 | 105 | 433.5 | 90 | 343.5 | 243 | 269 | 269 | 243 | 310 | 278.5 | 278.5 | 78.6 |
| **NRD EI 50/125C** | 50 | 50 | 340 | 284 | 190 | 105 | 433.5 | 90 | 343.5 | 243 | 269 | 269 | 243 | 310 | 278.5 | 278.5 | 79.5 |
| **NRD EI 50/125A** | 50 | 50 | 340 | 284 | 210 | 118 | 473.5 | 90 | 383.5 | 249 | 277 | 277 | 249 | 310 | 278.5 | 278.5 | 90.8 |
| **NRD EI 50/160C** | 50 | 50 | 340 | 284 | 210 | 118 | 473.5 | 90 | 383.5 | 249 | 277 | 277 | 249 | 310 | 291.5 | 291.5 | 94.7 |
| **NRD EI 50/160B** | 50 | 50 | 340 | 293 | 210 | 118 | 499.5 | 90 | 409.5 | 256 | 283 | 283 | 256 | 310 | 291.5 | 291.5 | 108.5 |
| **NRD EI 50/160A** | 50 | 50 | 340 | 293 | 210 | 118 | 499.5 | 90 | 409.5 | 256 | 283 | 283 | 256 | 310 | 291.5 | 291.5 | 117 |
| **NRD EI 65/125F** | 65 | 65 | 340 | 284 | 210 | 118 | 488.5 | 105 | 383.5 | 249 | 277 | 277 | 249 | 310 | 303.5 | 303.5 | 102.3 |
| **NRD EI 65/125D** | 65 | 65 | 340 | 293 | 210 | 118 | 514.5 | 105 | 409.5 | 256 | 283 | 283 | 256 | 310 | 303.5 | 303.5 | 118.5 |
| **NRD EI 65/125A** | 65 | 65 | 340 | 293 | 210 | 118 | 514.5 | 105 | 409.5 | 256 | 283 | 283 | 256 | 310 | 303.5 | 303.5 | 122.6 |
| **NRD EI 65/160B** | 65 | 65 | 340 | 364 | 283 | 156 | 543.5 | 105 | 438.5 | 274 | 304 | 304 | 274 | 310 | 303.5 | 303.5 | 158 |
| **NRD EI 65/160A** | 65 | 65 | 340 | 364 | 283 | 156 | 543.5 | 105 | 438.5 | 331 | 358 | 358 | 331 | 310 | 303.5 | 303.5 | 177.5 |

| TYPE | | | mm | | | | | | | | | | | | | | kg |
|---|---|---|---|---|---|---|---|---|---|---|---|---|---|---|---|---|---|
| | DN1 | DN2 | a | AD | AG | AR | fM | h1 | h6 | j1 | j2 | j3 | j4 | j5 | l1 | l2 | Weight |
| **NRD4 EI 50/160C** | 50 | 50 | 340 | 284 | 190 | 105 | 433.5 | 90 | 343.5 | 243 | 269 | 269 | 243 | 310 | 291.5 | 291.5 | - |
| **NRD4 EI 50/160B** | 50 | 50 | 340 | 284 | 190 | 105 | 433.5 | 90 | 343.5 | 243 | 269 | 269 | 243 | 310 | 291.5 | 291.5 | - |
| **NRD4 EI 50/160A** | 50 | 50 | 340 | 284 | 190 | 105 | 473.5 | 90 | 383.5 | 243 | 269 | 269 | 243 | 310 | 291.5 | 291.5 | - |
| **NRD4 EI 65/125F** | 65 | 65 | 340 | 284 | 190 | 105 | 448.5 | 105 | 343.5 | 243 | 269 | 269 | 243 | 310 | 303.5 | 303.5 | - |
| **NRD4 EI 65/125D** | 65 | 65 | 340 | 284 | 190 | 105 | 448.5 | 105 | 343.5 | 243 | 269 | 269 | 243 | 310 | 303.5 | 303.5 | 90.5 |
| **NRD4 EI 65/125A** | 65 | 65 | 340 | 284 | 190 | 105 | 488.5 | 105 | 383.5 | 243 | 269 | 269 | 243 | 310 | 303.5 | 303.5 | - |
| **NRD4 EI 65/160B** | 65 | 65 | 340 | 293 | 190 | 105 | 514.5 | 105 | 409.5 | 250 | 75 | 75 | 249 | 310 | 303.5 | 303.5 | - |
| **NRD4 EI 65/160A** | 65 | 65 | 340 | 293 | 190 | 105 | 514.5 | 105 | 409.5 | 250 | 75 | 75 | 249 | 310 | 303.5 | 303.5 | - |

### Flanges EN 1092-2

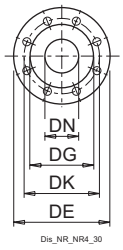


| mm | | | | | | | |
|---|---|---|---|---|---|---|---|
| DN | PN | DG | DK | DE | Holes | | W |
| | | | | | N° | ø | |
| 32 | 10-16 | 76 | 100 | 140 | 4 | 19 | 18 |
| 40 | 10-16 | 84 | 110 | 150 | 4 | 19 | 18 |
| 50 | 10-16 | 99 | 125 | 165 | 4 | 19 | 20 |
| 65 | 10-16 | 118 | 145 | 185 | 4 | 19 | 20 |
| 80 | 10-16 | 132 | 160 | 200 | 8 | 19 | 22 |
| 100 | 10-16 | 156 | 180 | 220 | 8 | 19 | 24 |
| 125 | 10-16 | 184 | 210 | 250 | 8 | 19 | 24 |

### Installation

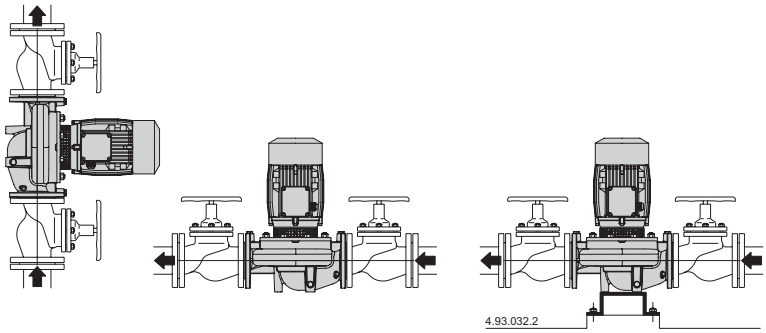

Ed. 07/2025

# MXH

calpeda®

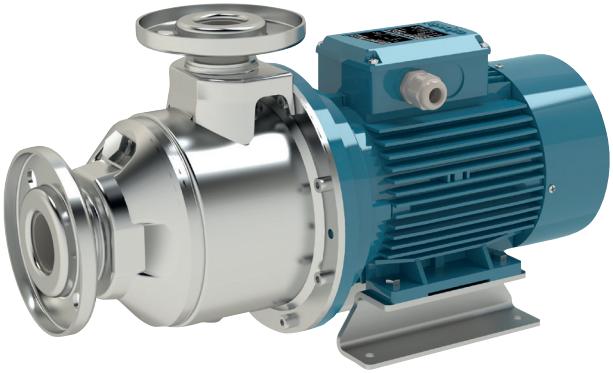

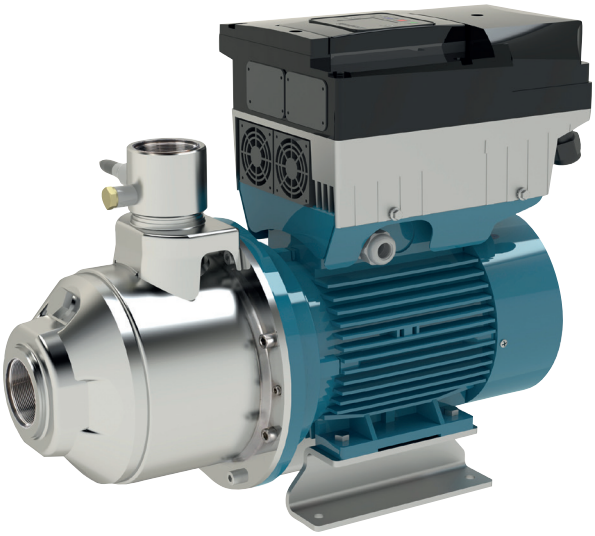

# Horizontal multi-stage close coupled stainless steel pumps

# MXH

## Coverage chart n ≈ 2900 rpm

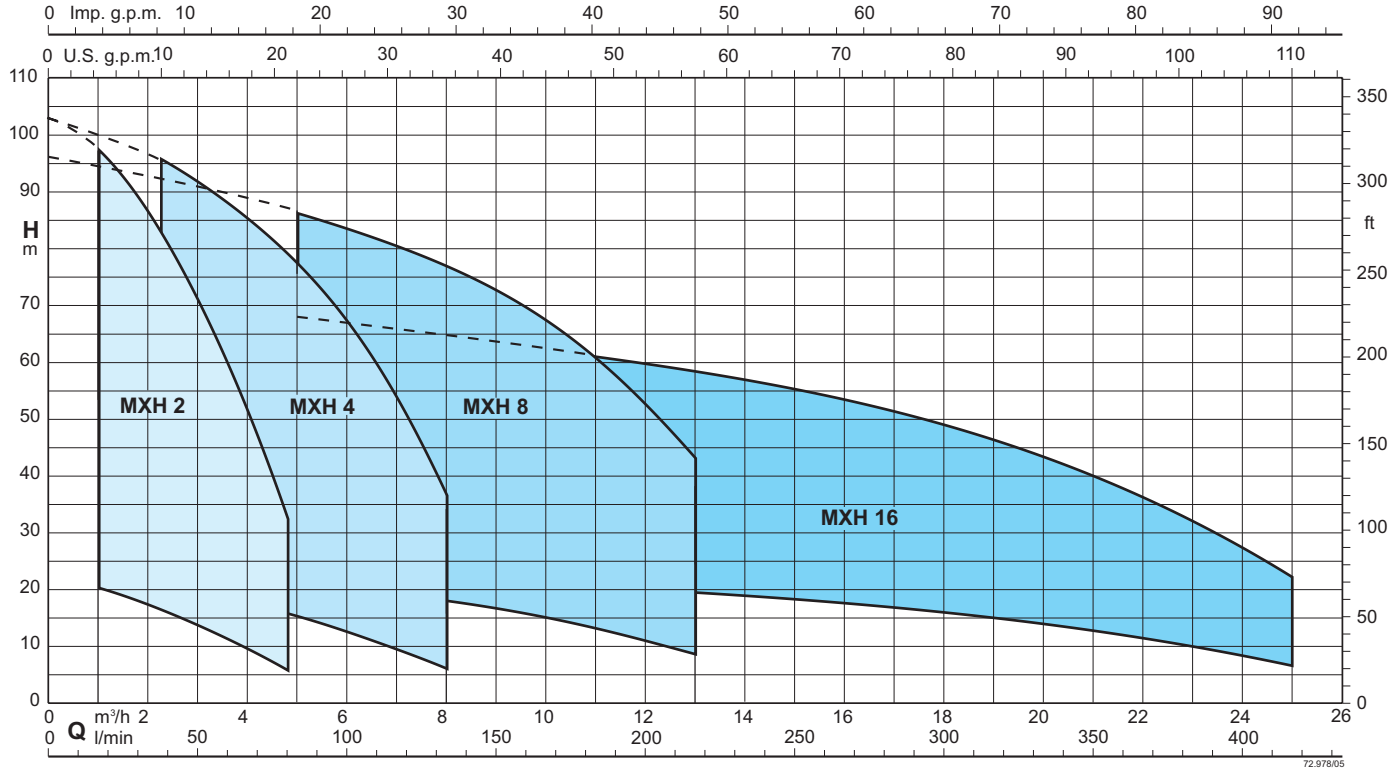


## Coverage chart n ≈ 2900 rpm

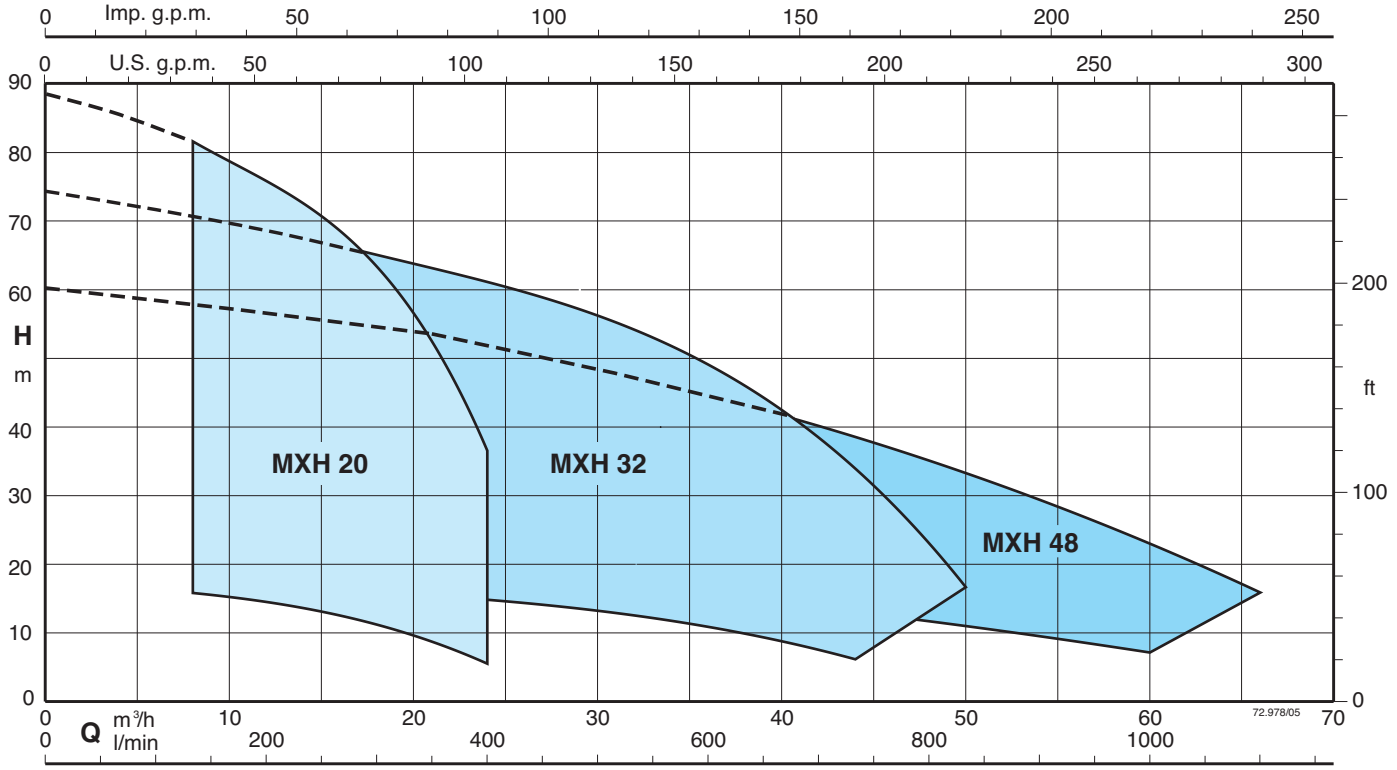

# MXH

## Construction

One-piece horizontal multi-stage pumps made of AISI 304 chrome-nickel stainless steel, AISI 316L steel for MXHL 2, 4, 8.
Compact and robust construction,with compact lantern bracket and motor with feet.
Single-piece barrel casing, with front suction port above pumps axis and radial delivery at top.
Version with frequency converter (on request)

## Applications

For water supply systems.
For clean liquids, without abrasives, which are non-aggressive for stainless steel (with suitable seal materials, on request).
Universal pump, for domestic use, for civil and industrial applications, for garden use and irrigation.

## Operating conditions

Liquid temperature: from -15°C to +110°C.
Ambient temperature up to 40° C.
Maximum permissible pressure in the pump casing: 10 bar, 8 bar for MXH 16.
Continuous duty (S3 60% for single-phase pump to 1,5-1,8 kW).

## Motor

2-pole induction motor, 50 Hz (n ≈ 2900 rpm).
**MXH:** three-phase 230/400 V ± 10% up to 3 kW;
400/690 V ± 10%, from 3.7 to 7.5 kW;
**MXHM** single-phase single-phase 230 V ± 10%, with thermal protector.
Capacitor inside the terminal box.
Insulation class F.
Protection IP 54.
Motor suitable for operation with frequency converter from 1,1 kW.
**IE2 efficiency class for single-phase motors up to 1,1 kW.**
**IE3 efficiency class for three-phase motors (IE2 up to 0,65 kW).**
Constructed in accordance with EN 60034-1; EN 60034-30-1.
EN 60335-1, EN 60335-2-41.

## Special features on request

Pumps with ports with Victaulic couplings (-V) for MXH versions 32, 40.
Pumps with flanged ports (-F) for MXH versions 20, 32, 40.
Other voltages.
Frequency 60 Hz (as per 60 Hz data sheet).
Protection IP 55.
Special mechanical seal
Pump casing seal rings in FPM.
Higher or lower liquid or ambient temperatures.
Motor suitable for operation with frequency converter up to 0,75 kW.

## Designation

Example: MXH(L) (-V, -F) EI 206/B
MXH = Series
L = Version in 1.4404 EN 10088 (AISI 316L) for MXH 2, 4, 8
(-V) = Version with Victaulic couplings for MXH 32, 40
(-F) = Version with flanged ports for MXH 20, 32, 40
EI = With frequency converter I-MAT
2 = Rated flow in m3/h
06 = Number of impellers
/B = It refers to a revision

## Materials

| Components | MXH | MXHL (2,4,8) |
|---|---|---|
| Pump casing | Chrome-nickel steel 1.4301 EN 10088 (AISI 304) | Stainless Steel 1.4404 EN 10088 (AISI 316L) |
| Stage casing | Chrome-nickel steel 1.4301 EN 10088 (AISI 304) | Stainless Steel 1.4404 EN 10088 (AISI 316L) |
| Wear ring | PPS | PPS |
| Impeller | Chrome-nickel steel 1.4301 EN 10088 (AISI 304) | Stainless Steel 1.4404 EN 10088 (AISI 316L) |
| Casing cover | Chrome-nickel steel 1.4301 EN 10088 (AISI 304) | Stainless Steel 1.4404 EN 10088 (AISI 316L) |
| Spacer sleeve | Chrome-nickel steel 1.4301 EN 10088 (AISI 304) | Stainless Steel 1.4404 EN 10088 (AISI 316L) |
| Pump shaft | Steel 1.4305 EN 10088 (AISI 303) for MXH 2, 4, 8, 16 | Stainless Steel 1.4404 EN 10088 (AISI 316L) |
| | Stainless Steel 1.4401 EN 10088 (AISI 316) for MXH 20, 32, 48 | - |
| Plug | Chrome-nickel steel 1.4305 EN 10088 (AISI 303) | Stainless Steel 1.4404 EN 10088 (AISI 316L) |
| Mechanical seal with seat according to ISO 3069 | Ceramic alumina/Carbon/EPDM | Ceramic alumina/Carbon/EPDM |

# MXH

## EI: Pumps with frequency converter

MXH EI pumps are available with power ratings ranging from 0.55 kW to 7.5 kW and are equipped with integrated I-MAT inverters.
This design enables the creation of a highly compact and efficient variable-speed system, making them ideal for water supply applications and the distribution of hot and cold water.
The pump is fitted with transducers optimized for operation and is pre-programmed at the factory for seamless performance.

## Features

- Energy saving
- Compact design
- Easy to use
- Programmable to suit the system requirements
- Reliability

## Construction

- The system consists of:
- Pump
- Induction motor
- I-MAT Frequency converter
- Motor adapter for the motor mounting of the frequency converter
- Connection cable between frequency converter and induction motor
- Transducers

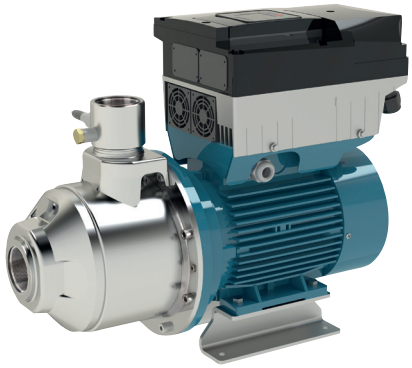

## Main features

Motor nominal power from 0.55 kW to 7.5 kW.
Control range from 1750 rpm (4-pole) to 2900 rpm (2-pole)
Protection against dry running
Protection against operations with closed valve ports
Protection against  system leakages
Protection against overcurrent in the motor
Protection agains overvoltage and undervoltage of the power supply
Protection against current unbalances between phases

## Operating modes

**Constant pressure mode**
with pressure transducer
In this mode, the system maintains the preset pressure when the flow required by the installation changes.

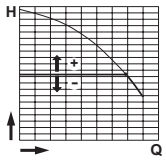


**Proportional pressure mode**
with pressure transducer
In this mode the system changes the working pressure according to the required flow rate.

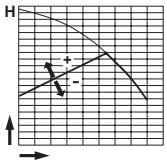


**Constant flow mode**
with flow meter
In this mode the system maintains a constant flow rate value in a point of the installation according to the required pressure.

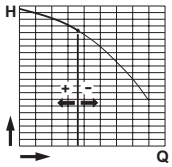


**Fixed speed mode**
with setting of the speed preferential rotation.
In this mode, by changing the working frequency, you may choose any operational curve included within the working range.

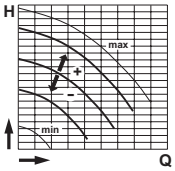


**Constant temperature mode**
with temperature transducer
In this mode the system keeps the temperature constant inside a system by changing the speed of the pump.

# MXH

## Coverage chart n ≈ 2900 rpm

### Data also valid for MXHL (in AISI 316L stainless steel)

### Three-phase

| | | | | | | Q = Flow | | | | | | | | | | |
|---|---|---|---|---|---|---|---|---|---|---|---|---|---|---|---|---|
| | | | | | | m³/h | 0 | 1 | 1,5 | 2 | 2,5 | 3 | 3,5 | 4 | 4,25 | 4,8 |
| Model | | 230V | 400V | P2 | | l/min | | 16,6 | 25 | 33,3 | 41,6 | 50 | 58,3 | 66,6 | 70,8 | 80 |
| | | A | | kW | HP | | H (m) = Total head | | | | | | | | | |
| MXHL | MXH 202/A | 1,7 | 1 | 0,25 | 0,34 | | 22 | 20 | 18,5 | 17 | 15,3 | 13,4 | 11,4 | 9,3 | 8,2 | 5,6 |
| MXHL | MXH 203/A | 2,4 | 1,4 | 0,37 | 0,5 | | 33 | 31 | 29 | 27 | 24,5 | 21,7 | 18,6 | 15,5 | 13,8 | 9 |
| MXHL | MXH 204/B | 2,8 | 1,6 | 0,55 | 0,75 | | 45 | 42,5 | 40,4 | 37,5 | 34,5 | 30,8 | 26,7 | 22,4 | 20,1 | 14,8 |
| MXHL | MXH 205/C | 3,5 | 2 | 0,75 | 1 | | 57 | 53,5 | 50,5 | 47,5 | 43,5 | 39 | 34 | 28,5 | 25,8 | 19 |
| MXHL | MXH 206/D | 4,6 | 2,7 | 1,1 | 1,5 | | 68,5 | 65 | 61,5 | 58 | 53,5 | 48 | 43 | 36,5 | 33,5 | 25 |
| MXHL | MXH 207 | 4,6 | 2,7 | 1,1 | 1,5 | | 80 | 75,3 | 71,3 | 66,5 | 60,8 | 54,5 | 47,5 | 39,6 | 35,2 | 24,7 |
| MXHL | MXH 208 | 6,2 | 3,6 | 1,5 | 2 | | 92,5 | 84,9 | 80,6 | 75 | 68,8 | 62 | 54,3 | 45,1 | 39,8 | 27,2 |
| MXHL | MXH 209 | 6,2 | 3,6 | 1,5 | 2 | | 103 | 97,1 | 92,3 | 86,2 | 78,9 | 70,7 | 61,4 | 51,1 | 45,6 | 32,3 |

### Single-phase

| | | | | | | Q = Flow | | | | | | | | | | |
|---|---|---|---|---|---|---|---|---|---|---|---|---|---|---|---|---|
| | | | | | | m³/h | 0 | 1 | 1,5 | 2 | 2,5 | 3 | 3,5 | 4 | 4,25 | 4,8 |
| Model | | 230V | P2 | | P1 | l/min | | 16,6 | 25 | 33,3 | 41,6 | 50 | 58,3 | 66,6 | 70,8 | 80 |
| | | A | kW | HP | kW | | H (m) = Total head | | | | | | | | | |
| MXHLM | MXHM 202/A | 2,3 | 0,25 | 0,34 | 0,42 | | 22 | 20 | 18,5 | 17 | 15,3 | 13,4 | 11,4 | 9,3 | 8,2 | 5,6 |
| MXHLM | MXHM 203/A | 3 | 0,37 | 0,5 | 0,57 | | 33 | 31 | 29 | 27 | 24,5 | 21,7 | 18,6 | 15,5 | 13,8 | 9 |
| MXHLM | MXHM 204/B | 4,5 | 0,55 | 0,75 | 0,78 | | 45 | 42,5 | 40,4 | 37,5 | 34,5 | 30,8 | 26,7 | 22,4 | 20,1 | 14,8 |
| MXHLM | MXHM 205/B | 5,7 | 0,75 | 1 | 1,01 | | 57 | 53,5 | 50,5 | 47,5 | 43,5 | 39 | 34 | 28,5 | 25,8 | 19 |
| MXHLM | MXHM 206/A | 7,4 | 1,1 | 1,5 | 1,44 | | 68,5 | 65 | 61,5 | 58 | 53,5 | 48 | 43 | 36,5 | 33,5 | 25 |
| MXHLM | MXHM 207 | 7,4 | 1,1 | 1,5 | 1,5 | | 80 | 75,3 | 71,3 | 66,5 | 60,8 | 54,5 | 47,5 | 39,6 | 35,2 | 24,7 |
| MXHLM | MXHM 208 | 9,2 | 1,5 | 2 | 2 | | 92,5 | 84,9 | 80,6 | 75 | 68,8 | 62 | 54,3 | 45,1 | 39,8 | 27,2 |
| MXHLM | MXHM 209 | 9,2 | 1,5 | 2 | 2 | | 103 | 97,1 | 92,3 | 86,2 | 78,9 | 70,7 | 61,4 | 51,1 | 45,6 | 32,3 |

### Three-phase

| | | | | | | Q = Flow | | | | | | | | | | |
|---|---|---|---|---|---|---|---|---|---|---|---|---|---|---|---|---|
| | | | | | | m³/h | 0 | 2,25 | 3 | 3,5 | 4 | 4,5 | 5 | 6 | 7 | 8 |
| Model | | 230V | 400V | P2 | | l/min | | 37,5 | 50 | 58,3 | 66,6 | 75 | 83,3 | 100 | 117 | 133 |
| | | A | | kW | HP | | H (m) = Total head | | | | | | | | | |
| MXHL | MXH 402/A | 2,4 | 1,4 | 0,37 | 0,5 | | 22,5 | 20 | 19 | 18,5 | 17,5 | 16 | 15 | 12,5 | 9,5 | 6 |
| MXHL | MXH 403/B | 2,8 | 1,6 | 0,55 | 0,75 | | 33 | 30 | 29 | 27,5 | 26 | 24,5 | 23 | 19,5 | 15 | 9,5 |
| MXHL | MXH 404/C | 3,5 | 2 | 0,75 | 1 | | 44,5 | 40,5 | 38 | 36,5 | 35 | 33 | 31 | 26 | 20 | 12,5 |
| MXHL | MXH 405/D | 4,6 | 2,7 | 1,1 | 1,5 | | 56,5 | 52 | 50 | 47,5 | 45,5 | 43 | 40 | 33,5 | 26 | 16,5 |
| MXHL | MXH 406/B | 6,2 | 3,6 | 1,5 | 2 | | 68,5 | 63 | 60 | 58 | 56 | 53,5 | 51 | 44 | 35 | 23 |
| MXHL | MXH 407 | 6,2 | 3,6 | 1,5 | 2 | | 79 | 73 | 69,9 | 67,6 | 65,1 | 62,2 | 58,9 | 50,9 | 40,7 | 28,4 |
| MXHL | MXH 408 | 8,3 | 4,8 | 1,8 | 2,5 | | 91,5 | 84,8 | 81,3 | 78,6 | 75,7 | 72,4 | 68,6 | 59,5 | 47,6 | 32,7 |
| MXHL | MXH 409 | 9,2 | 5,3 | 2,2 | 3 | | 103,5 | 95,6 | 91,5 | 88,4 | 85,1 | 81,3 | 77,2 | 67 | 53,6 | 36,5 |

### Single-phase

| | | | | | | Q = Flow | | | | | | | | | | |
|---|---|---|---|---|---|---|---|---|---|---|---|---|---|---|---|---|
| | | | | | | m³/h | 0 | 2,25 | 3 | 3,5 | 4 | 4,5 | 5 | 6 | 7 | 8 |
| Model | | 230V | P2 | | P1 | l/min | | 37,5 | 50 | 58,3 | 66,6 | 75 | 83,3 | 100 | 117 | 133 |
| | | A | kW | HP | kW | | H (m) = Total head | | | | | | | | | |
| MXHLM | MXHM 402/A | 3 | 0,37 | 0,5 | 0,57 | | 22,5 | 20 | 19 | 18,5 | 17,5 | 16 | 15 | 12,5 | 9,5 | 6 |
| MXHLM | MXHM 403/B | 4,5 | 0,55 | 0,75 | 0,78 | | 33 | 30 | 29 | 27,5 | 26 | 24,5 | 23 | 19,5 | 15 | 9,5 |
| MXHLM | MXHM 404/B | 5,7 | 0,75 | 1 | 1,01 | | 44,5 | 40,5 | 38 | 36,5 | 35 | 33 | 31 | 26 | 20 | 12,5 |
| MXHLM | MXHM 405/A | 7,4 | 1,1 | 1,5 | 1,44 | | 56,5 | 52 | 50 | 47,5 | 45,5 | 43 | 40 | 33,5 | 26 | 16,5 |
| MXHLM | MXHM 406/A | 9,2 | 1,5 | 2 | 2 | | 68,5 | 63 | 60 | 58 | 56 | 53,5 | 51 | 44 | 35 | 23 |
| MXHLM | MXHM 407 | 9,2 | 1,5 | 2 | 2 | | 79 | 73 | 69,9 | 67,6 | 65,1 | 62,2 | 58,9 | 50,9 | 40,7 | 28,4 |
| MXHLM | MXHM 408 | 11,2 | 1,8 | 2,5 | 2,5 | | 91,5 | 84,8 | 81,3 | 78,6 | 75,7 | 72,4 | 68,6 | 59,5 | 47,6 | 32,7 |

**P1:** Maximum power input.
**P2:** Rated motor power output.
Tolerances according to UNI EN ISO 9906:2012
A safety margin of + 0.5 m is recommended for the NPSH value.
**Test results with clean cold water, without gas content.**

# MXH

calpeda®

## Coverage chart n ≈ 2900 rpm

### Three-phase

| | | | | | | Q = Flow | | | | | | | | | | |
|---|---|---|---|---|---|---|---|---|---|---|---|---|---|---|---|---|
| | | | | | | m³/h | 0 | 5 | 6 | 7 | 8 | 9 | 10 | 11 | 12 | 13 |
| Model | | 230V | 400V | P2 | | l/min | | 83,3 | 100 | 117 | 133 | 150 | 167 | 183 | 200 | 217 |
| | | A | | kW | HP | | H (m) = Total head | | | | | | | | | |
| MXHL | MXH 802/C | 3,5 | 2 | 0,75 | 1 | | 22,5 | 20,5 | 20 | 19 | 18 | 16,5 | 15 | 13 | 11 | 8,5 |
| MXHL | MXH 803/B | 4,6 | 2,7 | 1,1 | 1,5 | | 36 | 32 | 30,5 | 29 | 27,5 | 25,5 | 23 | 20 | 17 | 14 |
| MXHL | MXH 804/B | 6,2 | 3,6 | 1,5 | 2 | | 48 | 42,5 | 41 | 39 | 37 | 34,5 | 32 | 28 | 24 | 19,5 |
| MXHL | MXH 805/C | 8,3 | 4,8 | 1,8 | 2,5 | | 60 | 54 | 52 | 49,5 | 47 | 43,5 | 39,5 | 35 | 29,5 | 24 |
| MXHL | MXH 806 | 9,2 | 5,3 | 2,2 | 3 | | 71 | 63,1 | 60,7 | 58 | 55,1 | 51,7 | 47,5 | 42,3 | 35,8 | 28,1 |
| MXHL | MXH 807 | 11,5 | 6,6 | 3 | 4 | | 83,5 | 75,4 | 73 | 70,3 | 67,1 | 63,4 | 58,7 | 53 | 45,9 | 37,6 |
| MXHL | MXH 808 | 11,5 | 6,6 | 3 | 4 | | 95,5 | 86 | 83,3 | 80,3 | 76,7 | 72,5 | 67,2 | 60,6 | 52,4 | 43 |

### Single-phase

| | | | | | | Q = Flow | | | | | | | | | | |
|---|---|---|---|---|---|---|---|---|---|---|---|---|---|---|---|---|
| | | | | | | m³/h | 0 | 5 | 6 | 7 | 8 | 9 | 10 | 11 | 12 | 13 |
| Model | | 230V | P2 | | P1 | l/min | | 83,3 | 100 | 117 | 133 | 150 | 167 | 183 | 200 | 217 |
| | | A | kW | HP | kW | | H (m) = Total head | | | | | | | | | |
| MXHLM | MXHM 802/B | 5,7 | 0,75 | 1 | 1,01 | | 22,5 | 20,5 | 20 | 19 | 18 | 16,5 | 15 | 13 | 11 | 8,5 |
| MXHLM | MXHM 803/A | 7,4 | 1,1 | 1,5 | 1,44 | | 36 | 32 | 30,5 | 29 | 27,5 | 25,5 | 23 | 20 | 17 | 14 |
| MXHLM | MXHM 804/A | 9,2 | 1,5 | 2 | 2 | | 48 | 42,5 | 41 | 39 | 37 | 34,5 | 32 | 28 | 24 | 19,5 |
| MXHLM | MXHM 805/B | 11,2 | 1,8 | 2,5 | 2,5 | | 60 | 54 | 52 | 49,5 | 47 | 43,5 | 39,5 | 35 | 29,5 | 24 |

### Three-phase

| | | | | | | Q = Flow | | | | | | | | | | |
|---|---|---|---|---|---|---|---|---|---|---|---|---|---|---|---|---|
| | | | | | | m³/h | 0 | 5 | 8 | 11 | 14 | 16 | 18 | 20 | 22 | 25 |
| Model | 230V | 400V | 690V | P2 | | l/min | | 83,3 | 133 | 183 | 233 | 267 | 300 | 333 | 367 | 417 |
| | A | | | kW | HP | | H (m) = Total head | | | | | | | | | |
| MXH 1602/A | 6,2 | 3,6 | - | 1,5 | 2 | | 24 | 23 | 21,7 | 20,5 | 18,8 | 17,5 | 15,8 | 14 | 11,5 | 6,5 |
| MXH 1603/B | 8,3 | 4,8 | - | 1,8 | 2,5 | | 36 | 34 | 31,8 | 29,5 | 26,8 | 24,8 | 22,4 | 19,2 | 15,3 | 8,8 |
| MXH 1604/A | 11,5 | 6,6 | - | 3 | 4 | | 48 | 46,5 | 44,5 | 41,5 | 38 | 36 | 33 | 29 | 23 | 14 |
| MXH 1605/B | - | 9,6 | 5,5 | 4 | 5,5 | | 60 | 57,5 | 55 | 51,5 | 48 | 45 | 42 | 37,5 | 31,5 | 19 |
| MXH 1606/B | - | 9,6 | 5,5 | 4 | 5,5 | | 71 | 68 | 65 | 61 | 56 | 53 | 49 | 44 | 36 | 22 |

### Single-phase

| | | | | | Q = Flow | | | | | | | | | | |
|---|---|---|---|---|---|---|---|---|---|---|---|---|---|---|---|
| | | | | | m³/h | 0 | 5 | 8 | 11 | 14 | 16 | 18 | 20 | 22 | 25 |
| Model | 230V | P2 | | P1 | l/min | | 83,3 | 133 | 183 | 233 | 267 | 300 | 333 | 367 | 417 |
| | A | kW | HP | kW | | H (m) = Total head | | | | | | | | | |
| MXHM 1602 | 9,2 | 1,5 | 2 | 2 | | 48 | 23 | 21,7 | 20,5 | 18,8 | 17,5 | 15,8 | 14 | 11,5 | 6,5 |
| MXHM 1603 | 11,2 | 1,8 | 2,5 | 2,5 | | 36 | 34 | 31,8 | 29,5 | 26,8 | 24,8 | 22,4 | 19,2 | 15,3 | 8,8 |

**P1:** Maximum power input.
**P2:** Rated motor power output.
Tolerances according to UNI EN ISO 9906:2012
A safety margin of + 0.5 m is recommended for the NPSH value.
**Test results with clean cold water, without gas content.**

# MXH

## Coverage chart n ≈ 2900 rpm

### Three-phase

| | | | | | | | | | | | | | | | | |
|---|---|---|---|---|---|---|---|---|---|---|---|---|---|---|---|---|
| | | | | | | | Q = Flow | | | | | | | | | |
| | | | | | | m³/h | 0 | 8 | 10 | 12 | 14 | 16 | 18 | 20 | 22 | 24 |
| Model | 230V | 400V | 690V | P2 | | l/min | | 133 | 167 | 200 | 233 | 267 | 300 | 333 | 367 | 400 |
| | A | | | kW | HP | | H (m) = Total head | | | | | | | | | |
| MXH 2001/A | 4,6 | 2,7 | - | 1,1 | 1,5 | | 17,6 | 15,7 | 15,1 | 14,4 | 13,5 | 12,4 | 11,1 | 9,5 | 7,6 | 5,4 |
| MXH 2002/A | 8,3 | 4,8 | - | 1,8 | 2,5 | | 35,1 | 31,4 | 30,3 | 29,1 | 27,5 | 25,6 | 23,4 | 20,6 | 17,4 | 13,6 |
| MXH 2003 | 11,5 | 6,6 | - | 3 | 4 | | 54 | 48,5 | 46,9 | 45,2 | 43,2 | 40,8 | 37,7 | 33,8 | 28,8 | 22,3 |
| MXH 2004/A | - | 9,6 | 5,5 | 4 | 5,5 | | 71,5 | 64,5 | 62,5 | 60,5 | 57,5 | 54,5 | 50 | 45 | 38 | 29 |
| MXH 2005 | - | 10,8 | 6,2 | 5,5 | 7,5 | | 89 | 81,5 | 79 | 76 | 72,5 | 68 | 63 | 56,5 | 48,5 | 36 |

### Three-phase

| | | | | | | | | | | | | | | | | |
|---|---|---|---|---|---|---|---|---|---|---|---|---|---|---|---|---|
| | | | | | | | Q = Flow | | | | | | | | | |
| | | | | | | m³/h | 0 | 15 | 21 | 24 | 27 | 30 | 33 | 36 | 39 | 44 | 50 |
| Model | 230V | 400V | 690V | P2 | | l/min | | 250 | 350 | 400 | 450 | 500 | 550 | 600 | 650 | 733 | 833 |
| | A | | | kW | HP | | H (m) = Total head | | | | | | | | | |
| MXH 3201/B | 9,2 | 5,3 | - | 2,2 | 3 | | 18,4 | 16,3 | 15,3 | 14,8 | 14 | 13 | 12 | 10,8 | 9,3 | 6 | - |
| MXH 3202/B | - | 9,6 | 5,5 | 4 | 5,5 | | 37 | 33 | 31 | 30 | 28,5 | 27 | 25 | 23 | 20,5 | 15 | 7,5 |
| MXH 3203/A | - | 10,8 | 6,2 | 5,5 | 7,5 | | 55,5 | 50 | 47 | 45,5 | 43 | 40,5 | 38 | 35 | 31 | 23 | 10 |
| MXH 3204/A | - | 14,3 | 8,3 | 7,5 | 10 | | 74,5 | 67 | 63 | 61 | 59 | 56 | 53 | 49 | 44 | 34 | 16,5 |

### Three-phase

| | | | | | | | | | | | | | | | | |
|---|---|---|---|---|---|---|---|---|---|---|---|---|---|---|---|---|
| | | | | | | | Q = Flow | | | | | | | | | |
| | | | | | | m³/h | 0 | 21 | 27 | 33 | 39 | 45 | 48 | 51 | 54 | 60 | 66 |
| Model | 230V | 400V | 690V | P2 | | l/min | | 350 | 450 | 550 | 650 | 750 | 800 | 850 | 900 | 1000 | 1100 |
| | A | | | kW | HP | | H (m) = Total head | | | | | | | | | |
| MXH 4801/A | 11,5 | 6,6 | - | 3 | 4 | | 20 | 18 | 17 | 16 | 14,5 | 12,5 | 11,5 | 10,5 | 9,5 | 7 | - |
| MXH 4802/A | - | 10,8 | 6,2 | 5,5 | 7,5 | | 41 | 35,3 | 33 | 30,5 | 27,5 | 24,5 | 22,5 | 21 | 19 | 14 | 7,5 |
| MXH 4803/A | - | 14,3 | 8,3 | 7,5 | 10 | | 60,5 | 53 | 50 | 46 | 42,5 | 38 | 35 | 32,5 | 29 | 22,5 | 16 |

**P1:** Maximum power input.
**P2:** Rated motor power output.
Tolerances according to UNI EN ISO 9906:2012
A safety margin of + 0.5 m is recommended for the NPSH value.
**Test results with clean cold water, without gas content.**

# MXH

## Characteristic curves n ≈ 2900 rpm

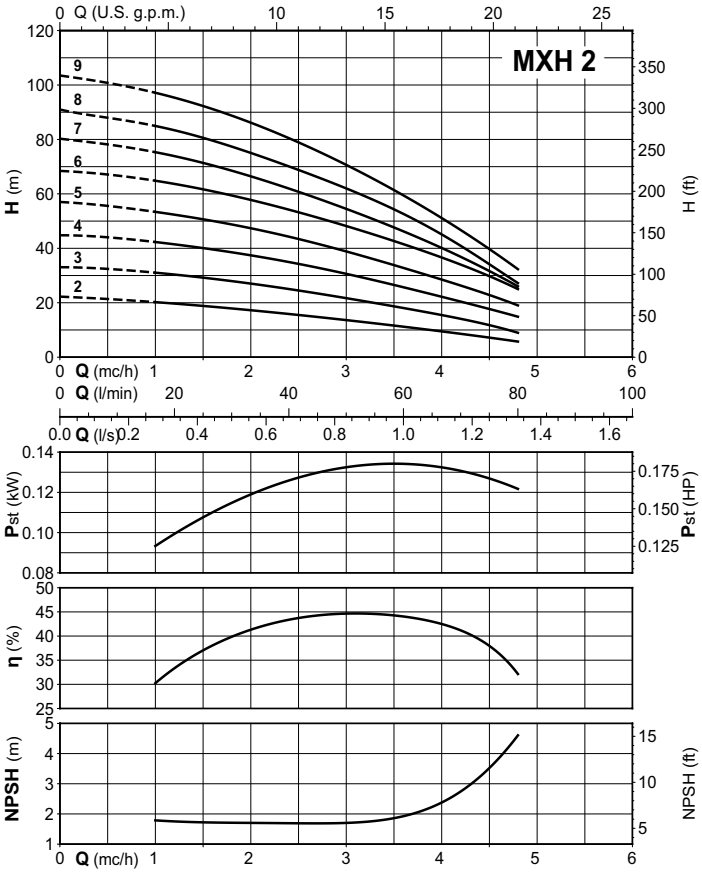


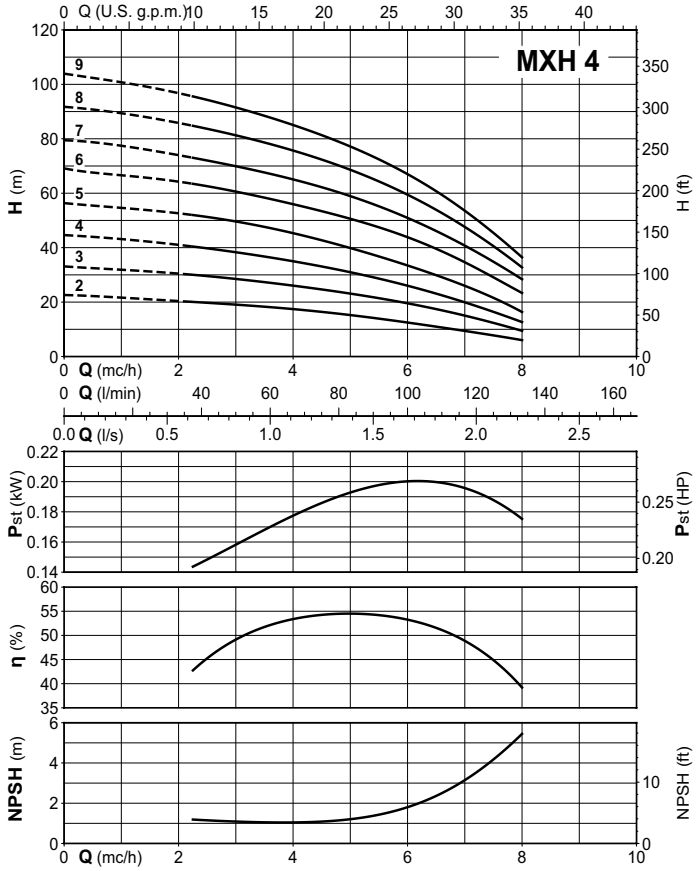


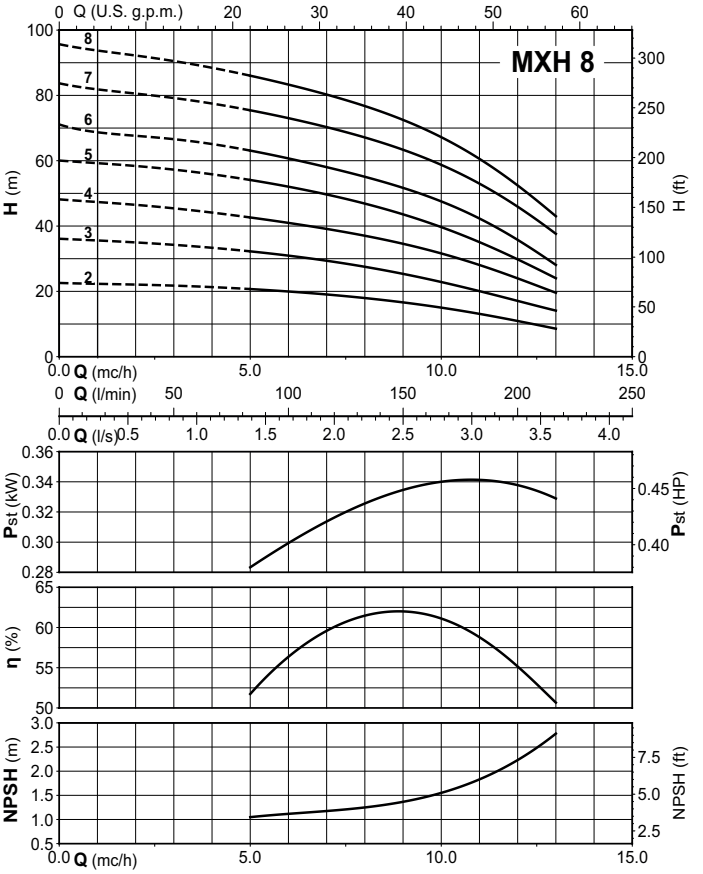


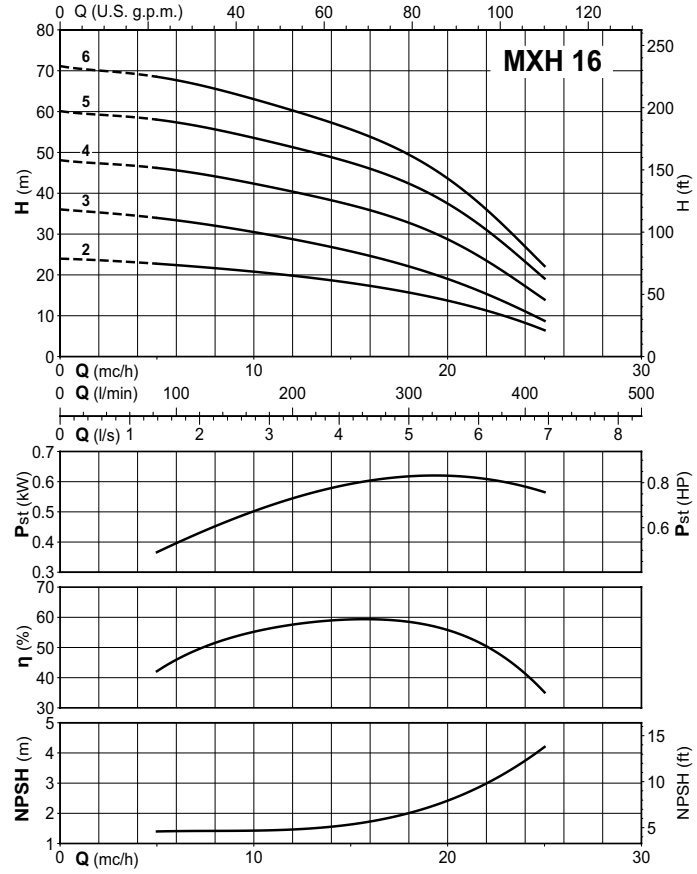

MXH

calpeda

## Characteristic curves n ≈ 2900 rpm

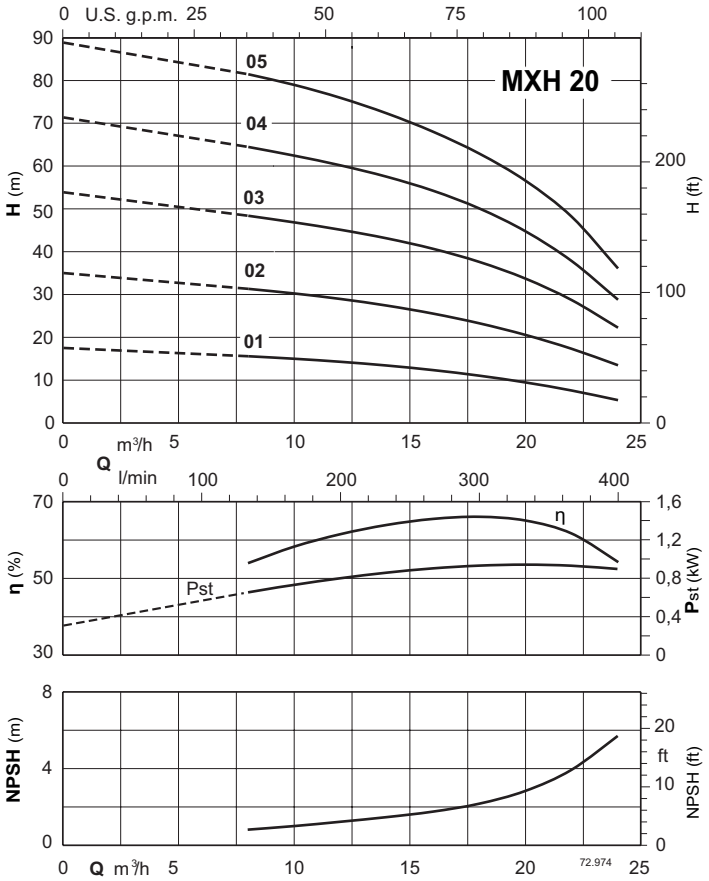


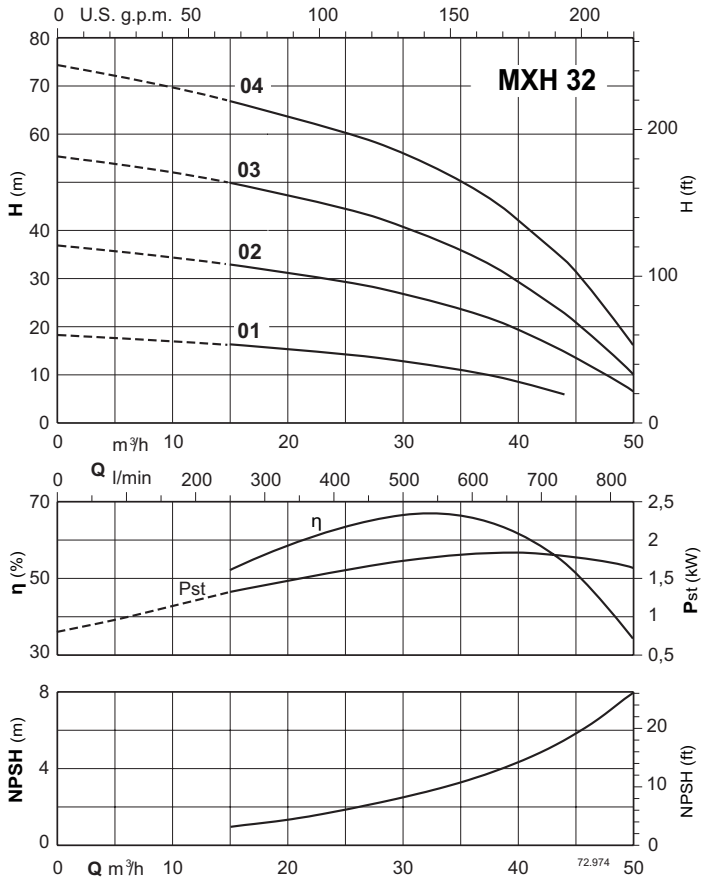


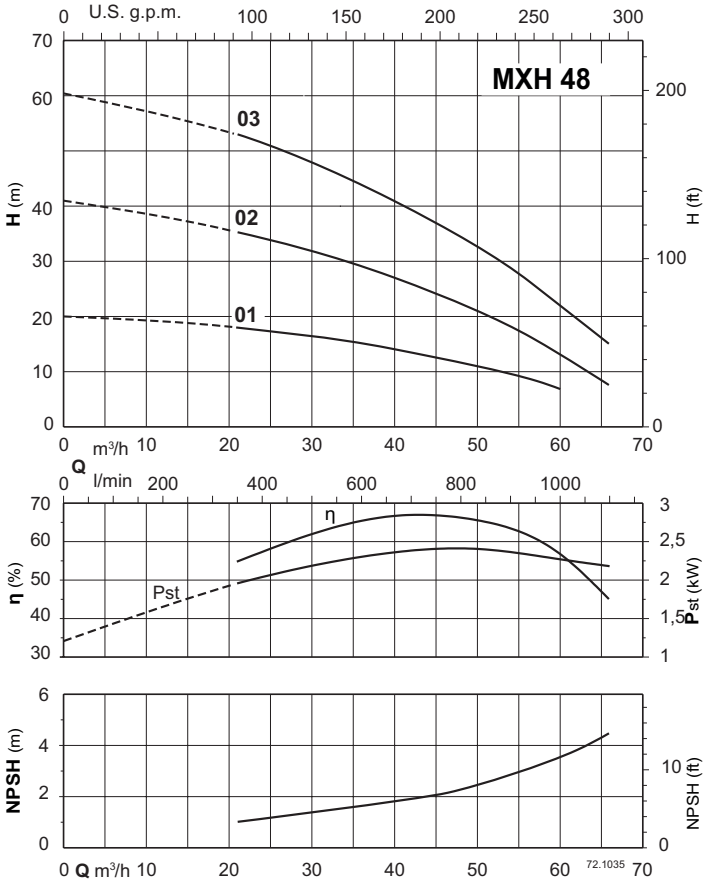

# MXH

## Dimensions and weights

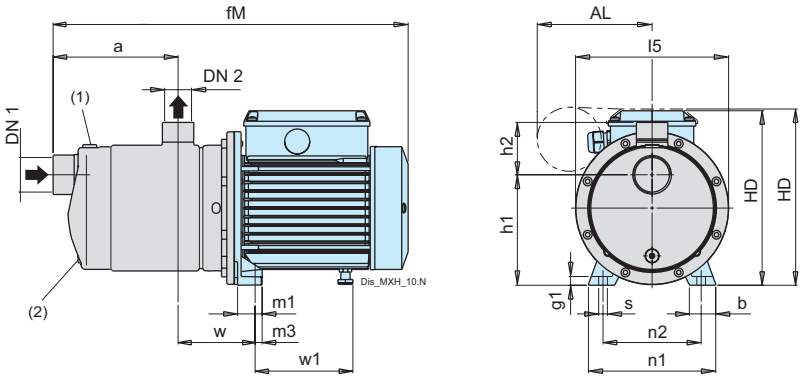


| TYPE | | | mm | | | | | | | | | | | | | | | kg |
|---|---|---|---|---|---|---|---|---|---|---|---|---|---|---|---|---|---|---|
| | DN1 | DN2 | a | b | fM | g1 | h1 | h2 | HD | l5 | m1 | m3 | n1 | n2 | s | w | w1 | Weight |
| **MXH 202/A** | G 1 1/4 | G 1 | 95 | 30.5 | 331 | 10 | 126 | 60 | 187 | 175 | 28 | 8 | 146 | 112 | 9.5 | 88 | 102 | - |
| **MXH 203/A** | G 1 1/4 | G 1 | 95 | 30.5 | 331 | 10 | 126 | 60 | 187 | 175 | 28 | 8 | 146 | 112 | 9.5 | 88 | 102 | - |
| **MXH 204/B** | G 1 1/4 | G 1 | 119 | 30.5 | 381 | 10 | 126 | 60 | 201 | 175 | 28 | 8 | 146 | 112 | 9.5 | 88 | 113 | - |
| **MXH 205/C** | G 1 1/4 | G 1 | 143 | 30.5 | 405 | 10 | 126 | 60 | 201 | 175 | 28 | 8 | 146 | 112 | 9.5 | 88 | 113 | - |
| **MXH 206/D** | G 1 1/4 | G 1 | 167 | 28.5 | 489 | 10 | 126 | 60 | 218 | 175 | 28 | 8 | 146 | 112 | 9.5 | 88 | 149 | - |
| **MXH 207** | G 1 1/4 | G 1 | 191 | 28.5 | 513 | 10 | 126 | 60 | 218 | 175 | 28 | 8 | 146 | 112 | 9.5 | 88 | 149 | - |
| **MXH 208** | G 1 1/4 | G 1 | 215 | 28.5 | 537 | 10 | 126 | 60 | 218 | 175 | 28 | 8 | 146 | 112 | 9.5 | 88 | 149 | - |
| **MXH 209** | G 1 1/4 | G 1 | 239 | 28.5 | 561 | 10 | 126 | 60 | 218 | 175 | 28 | 8 | 146 | 112 | 9.5 | 88 | 149 | - |
| **MXH 402/A** | G 1 1/4 | G 1 | 95 | 30.5 | 331 | 10 | 126 | 60 | 187 | 175 | 28 | 8 | 146 | 112 | 9.5 | 88 | 102 | - |
| **MXH 403/B** | G 1 1/4 | G 1 | 95 | 30.5 | 357 | 10 | 126 | 60 | 201 | 175 | 28 | 8 | 146 | 112 | 9.5 | 88 | 113 | - |
| **MXH 404/C** | G 1 1/4 | G 1 | 119 | 30.5 | 381 | 10 | 126 | 60 | 201 | 175 | 28 | 8 | 146 | 112 | 9.5 | 88 | 113 | - |
| **MXH 405/D** | G 1 1/4 | G 1 | 143 | 28.5 | 465 | 10 | 126 | 60 | 218 | 175 | 28 | 8 | 146 | 112 | 9.5 | 88 | 149 | - |
| **MXH 406/B** | G 1 1/4 | G 1 | 167 | 28.5 | 489 | 10 | 126 | 60 | 218 | 175 | 28 | 8 | 146 | 112 | 9.5 | 88 | 149 | - |
| **MXH 407** | G 1 1/4 | G 1 | 191 | 28.5 | 513 | 10 | 126 | 60 | 218 | 175 | 28 | 8 | 146 | 112 | 9.5 | 88 | 149 | - |
| **MXH 408** | G 1 1/4 | G 1 | 215 | 28.5 | 577 | 10 | 126 | 60 | 218 | 175 | 28 | 8 | 146 | 112 | 9.5 | 88 | 189 | - |
| **MXH 409** | G 1 1/4 | G 1 | 239 | 28.5 | 601 | 10 | 126 | 60 | 218 | 175 | 28 | 8 | 146 | 112 | 9.5 | 88 | 189 | - |
| **MXH 802/C** | G 1 1/2 | G 1 | 117 | 30.5 | 379 | 10 | 126 | 60 | 201 | 175 | 28 | 8 | 146 | 112 | 9.5 | 88 | 113 | - |
| **MXH 803/B** | G 1 1/2 | G 1 | 117 | 28.5 | 440 | 10 | 126 | 60 | 218 | 175 | 28 | 8 | 146 | 112 | 9.5 | 88 | 149 | - |
| **MXH 804/B** | G 1 1/2 | G 1 | 147 | 28.5 | 470 | 10 | 126 | 60 | 218 | 175 | 28 | 8 | 146 | 112 | 9.5 | 88 | 149 | - |
| **MXH 805/C** | G 1 1/2 | G 1 | 177 | 28.5 | 540 | 10 | 126 | 60 | 218 | 175 | 28 | 8 | 146 | 112 | 9.5 | 88 | 189 | - |
| **MXH 806** | G 1 1/2 | G 1 | 207 | 28.5 | 570 | 10 | 126 | 60 | 218 | 175 | 28 | 8 | 146 | 112 | 9.5 | 88 | 189 | - |
| **MXH 807** | G 1 1/2 | G 1 | 237 | 41 | 670 | 11 | 141 | 60 | 243 | 175 | 45.5 | 11.5 | 150 | 112 | 9.5 | 100 | 222 | - |
| **MXH 808** | G 1 1/2 | G 1 | 267 | 41 | 700 | 11 | 141 | 60 | 243 | 175 | 45.5 | 11.5 | 150 | 112 | 9.5 | 100 | 222 | - |
| **MXH 1602/A** | G 2 | G 1 1/2 | 130 | 30.5 | 477 | 10.5 | 117 | 70 | 212 | 160 | 29.5 | 10 | 146 | 112 | 9.5 | 101 | 154 | - |
| **MXH 1603/B** | G 2 | G 1 1/2 | 130 | 30.5 | 517 | 10.5 | 117 | 70 | 212 | 160 | 29.5 | 10 | 146 | 112 | 9.5 | 101 | 194 | 20.8 |
| **MXH 1604/A** | G 2 | G 1 1/2 | 168 | 38 | 614 | 10.5 | 132 | 70 | 237 | 160 | 43.5 | 15.5 | 146 | 112 | 9.5 | 113 | 216 | 30.4 |
| **MXH 1605/B** | G 2 | G 1 1/2 | 205 | 38 | 651 | 10.5 | 132 | 70 | 237 | 160 | 43.5 | 15.5 | 146 | 112 | 9.5 | 113 | 216 | 36.8 |
| **MXH 1606/B** | G 2 | G 1 1/2 | 243 | 38 | 689 | 10.5 | 132 | 70 | 237 | 160 | 43.5 | 15.5 | 146 | 112 | 9.5 | 113 | 216 | 35.2 |

| TYPE | | | mm | | | | | | | | | | | | | | | | kg |
|---|---|---|---|---|---|---|---|---|---|---|---|---|---|---|---|---|---|---|---|
| | DN1 | DN2 | a | AL | b | fM | g1 | h1 | h2 | HD | l5 | m1 | m3 | n1 | n2 | s | w | w1 | Weight |
| **MXHM 202/A** | G 1 1/4 | G 1 | 95 | - | 30.5 | 331 | 10 | 126 | 60 | 187 | 175 | 28 | 8 | 146 | 112 | 9.5 | 88 | 102 | - |
| **MXHM 203/A** | G 1 1/4 | G 1 | 95 | - | 30.5 | 331 | 10 | 126 | 60 | 187 | 175 | 28 | 8 | 146 | 112 | 9.5 | 88 | 102 | 8.7 |
| **MXHM 204/B** | G 1 1/4 | G 1 | 119 | - | 30.5 | 381 | 10 | 126 | 60 | 201 | 175 | 28 | 8 | 146 | 112 | 9.5 | 88 | 113 | - |
| **MXHM 205/B** | G 1 1/4 | G 1 | 143 | - | 30.5 | 405 | 10 | 126 | 60 | 201 | 175 | 28 | 8 | 146 | 112 | 9.5 | 88 | 113 | - |
| **MXHM 206/A** | G 1 1/4 | G 1 | 167 | - | 28.5 | 489 | 10 | 126 | 60 | 218 | 175 | 28 | 8 | 146 | 112 | 9.5 | 88 | 149 | - |
| **MXHM 207** | G 1 1/4 | G 1 | 191 | - | 28.5 | 513 | 10 | 126 | 60 | 218 | 175 | 28 | 8 | 146 | 112 | 9.5 | 88 | 149 | - |
| **MXHM 208** | G 1 1/4 | G 1 | 215 | - | 28.5 | 537 | 10 | 126 | 60 | 218 | 175 | 28 | 8 | 146 | 112 | 9.5 | 88 | 149 | - |
| **MXHM 209** | G 1 1/4 | G 1 | 239 | - | 28.5 | 561 | 10 | 126 | 60 | 218 | 175 | 28 | 8 | 146 | 112 | 9.5 | 88 | 149 | 21.7 |
| **MXHM 402/A** | G 1 1/4 | G 1 | 95 | - | 30.5 | 331 | 10 | 126 | 60 | 187 | 175 | 28 | 8 | 146 | 112 | 9.5 | 88 | 102 | 8.3 |
| **MXHM 403/B** | G 1 1/4 | G 1 | 95 | - | 30.5 | 357 | 10 | 126 | 60 | 201 | 175 | 28 | 8 | 146 | 112 | 9.5 | 88 | 113 | 11.4 |
| **MXHM 404/B** | G 1 1/4 | G 1 | 119 | - | 30.5 | 381 | 10 | 126 | 60 | 201 | 175 | 28 | 8 | 146 | 112 | 9.5 | 88 | 113 | - |
| **MXHM 405/A** | G 1 1/4 | G 1 | 143 | - | 28.5 | 465 | 10 | 126 | 60 | 218 | 175 | 28 | 8 | 146 | 112 | 9.5 | 88 | 149 | - |
| **MXHM 406/A** | G 1 1/4 | G 1 | 167 | - | 28.5 | 489 | 10 | 126 | 60 | 218 | 175 | 28 | 8 | 146 | 112 | 9.5 | 88 | 149 | - |
| **MXHM 407** | G 1 1/4 | G 1 | 191 | - | 28.5 | 513 | 10 | 126 | 60 | 218 | 175 | 28 | 8 | 146 | 112 | 9.5 | 88 | 149 | - |
| **MXHM 408** | G 1 1/4 | G 1 | 215 | 131 | 28.5 | 577 | 10 | 126 | 60 | 223 | 175 | 28 | 8 | 146 | 112 | 9.5 | 88 | 189 | 24.8 |
| **MXHM 802/B** | G 1 1/2 | G 1 | 117 | - | 30.5 | 379 | 10 | 126 | 60 | 201 | 175 | 28 | 8 | 146 | 112 | 9.5 | 88 | 113 | 12.5 |
| **MXHM 803/A** | G 1 1/2 | G 1 | 117 | - | 28.5 | 440 | 10 | 126 | 60 | 218 | 175 | 28 | 8 | 146 | 112 | 9.5 | 88 | 149 | 17.4 |
| **MXHM 804/A** | G 1 1/2 | G 1 | 147 | - | 28.5 | 470 | 10 | 126 | 60 | 218 | 175 | 28 | 8 | 146 | 112 | 9.5 | 88 | 149 | - |
| **MXHM 805/B** | G 1 1/2 | G 1 | 177 | 131 | 28.5 | 540 | 10 | 126 | 60 | 223 | 175 | 28 | 8 | 146 | 112 | 9.5 | 88 | 189 | - |
| **MXHM 1602** | G 1 1/2 | G 1 | 148 | - | 30.5 | 482 | 10.5 | 127 | 70 | 210 | 160 | 31 | 10 | 146 | 112 | 10 | 88 | 167 | - |
| **MXHM 1603** | G 2 | G 1 1/2 | 128 | - | 30.5 | 516 | 10.5 | 117 | 70 | 210 | 160 | 31 | 10 | 146 | 112 | 10 | 101 | 207 | - |

(1) Filling (2) Draining

MXH

## Dimensions and weights

### Dimensions and weights also valid for MXHL (1.4401 EN 10088 (AISI 316))

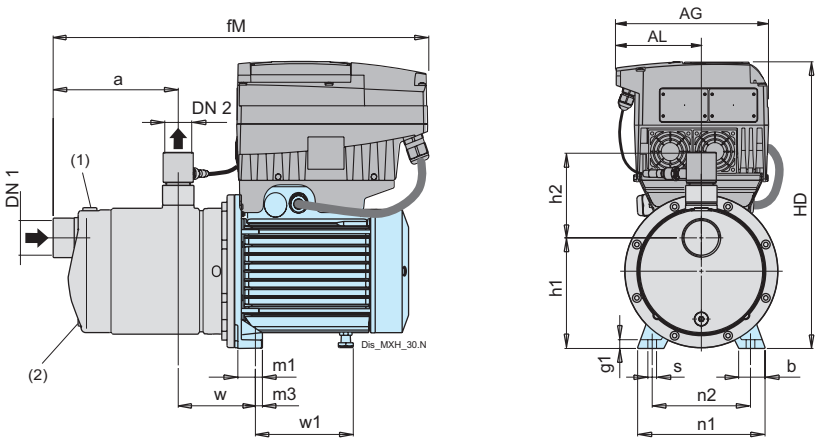


| TYPE | | | mm | | | | | | | | | | | | | | | | | kg |
|---|---|---|---|---|---|---|---|---|---|---|---|---|---|---|---|---|---|---|---|---|
| | DN1 | DN2 | a | AG | AL | b | fM | g1 | H | h1 | h2 | l5 | m1 | m3 | n1 | n2 | s | w | w1 | Weight |
| **MXH EI 204/A** | G 1 1/4 | G 1 | 119 | 190 | 105 | 30.5 | 443 | 10 | 356 | 126 | 114 | 175 | 28 | 8 | 146 | 112 | 9.50 | 88 | 113 | 17.2 |
| **MXH EI 205/B** | G 1 1/4 | G 1 | 143 | 190 | 105 | 30.5 | 467 | 10 | 356 | 126 | 114 | 175 | 28 | 8 | 146 | 112 | 9.50 | 88 | 113 | 19.6 |
| **MXH EI 206/C** | G 1 1/4 | G 1 | 167 | 190 | 105 | 28.5 | 521 | 10 | 373 | 126 | 114 | 175 | 28 | 8 | 146 | 112 | 9.50 | 88 | 149 | 24.3 |
| **MXH EI 207** | G 1 1/4 | G 1 | 191 | 190 | 105 | 28.5 | 545 | 10 | 373 | 126 | 114 | 175 | 28 | 8 | 146 | 112 | 9.50 | 88 | 149 | - |
| **MXH EI 208** | G 1 1/4 | G 1 | 215 | 190 | 105 | 28.5 | 569 | 10 | 373 | 126 | 114 | 175 | 28 | 8 | 146 | 112 | 9.50 | 88 | 149 | - |
| **MXH EI 209** | G 1 1/4 | G 1 | 239 | 190 | 105 | 28.5 | 593 | 10 | 373 | 126 | 114 | 175 | 28 | 8 | 146 | 112 | 9.50 | 88 | 149 | - |
| **MXH EI 403/A** | G 1 1/4 | G 1 | 95 | 190 | 105 | 30.5 | 419 | 10 | 356 | 126 | 114 | 175 | 28 | 8 | 146 | 112 | 9.50 | 88 | 113 | 16.5 |
| **MXH EI 404/B** | G 1 1/4 | G 1 | 119 | 190 | 105 | 30.5 | 443 | 10 | 356 | 126 | 114 | 175 | 28 | 8 | 146 | 112 | 9.50 | 88 | 113 | 19.7 |
| **MXH EI 405/C** | G 1 1/4 | G 1 | 143 | 190 | 105 | 28.5 | 497 | 10 | 373 | 126 | 114 | 175 | 28 | 8 | 146 | 112 | 9.50 | 88 | 149 | 23.2 |
| **MXH EI 406/A** | G 1 1/4 | G 1 | 167 | 190 | 105 | 28.5 | 521 | 10 | 373 | 126 | 114 | 175 | 28 | 8 | 146 | 112 | 9.50 | 88 | 149 | 25.3 |
| **MXH EI 407** | G 1 1/4 | G 1 | 191 | 190 | 105 | 28.5 | 545 | 10 | 373 | 126 | 114 | 175 | 28 | 8 | 146 | 112 | 9.50 | 88 | 149 | - |
| **MXH EI 408** | G 1 1/4 | G 1 | 215 | 190 | 105 | 28.5 | 577 | 10 | 373 | 126 | 114 | 175 | 28 | 8 | 146 | 112 | 9.50 | 88 | 189 | - |
| **MXH EI 409** | G 1 1/4 | G 1 | 239 | 210 | 118 | 28.5 | 625 | 10 | 373 | 126 | 114 | 175 | 28 | 8 | 146 | 112 | 9.50 | 88 | 189 | - |
| **MXH EI 803/B** | G 1 1/2 | G 1 | 117 | 190 | 105 | 28.5 | 472 | 10 | 373 | 126 | 114 | 175 | 28 | 8 | 146 | 112 | 9.50 | 88 | 149 | 23 |
| **MXH EI 804/A** | G 1 1/2 | G 1 | 147 | 190 | 105 | 28.5 | 502 | 10 | 373 | 126 | 114 | 175 | 28 | 8 | 146 | 112 | 9.50 | 88 | 149 | 24.1 |
| **MXH EI 805/B** | G 1 1/2 | G 1 | 177 | 190 | 105 | 28.5 | 540 | 10 | 373 | 126 | 114 | 175 | 28 | 8 | 146 | 112 | 9.50 | 88 | 189 | 28.4 |
| **MXH EI 806** | G 1 1/2 | G 1 | 207 | 210 | 118 | 28.5 | 594 | 10 | 373 | 126 | 114 | 175 | 28 | 8 | 146 | 112 | 9.50 | 88 | 189 | - |
| **MXH EI 807** | G 1 1/2 | G 1 | 237 | 210 | 118 | 41 | 683 | 11 | 398 | 141 | 114 | 175 | 45.5 | 11.5 | 150 | 112 | 9.50 | 100 | 222 | - |
| **MXH EI 808** | G 1 1/2 | G 1 | 267 | 210 | 118 | 41 | 713 | 11 | 398 | 141 | 114 | 175 | 45.5 | 11.5 | 150 | 112 | 9.50 | 100 | 222 | - |
| **MXH EI 1603/B** | G 2 | G 1 1/2 | 128 | 190 | 105 | 30.5 | 516 | 10.5 | 368 | 117 | 122 | 160 | 31 | 10 | 146 | 112 | 10 | 101 | 207 | 27.5 |
| **MXH EI 1604/A** | G 2 | G 1 1/2 | 166 | 210 | 118 | 38 | 627 | 10.5 | 391 | 132 | 122 | 160 | 44 | 12 | 146 | 112 | 12 | 113 | 232 | 38.7 |
| **MXH EI 1605/B** | G 2 | G 1 1/2 | 203 | 210 | 118 | 38 | 665 | 10.5 | 391 | 132 | 122 | 160 | 44 | 12 | 146 | 112 | 12 | 113 | 232 | 42.8 |
| **MXH EI 1606/B** | G 2 | G 1 1/2 | 241 | 210 | 118 | 38 | 702 | 10.5 | 391 | 132 | 122 | 160 | 44 | 12 | 146 | 112 | 12 | 113 | 232 | 43.6 |

(1) Filling (2) Draining

MXH

calpeda

## Dimensions and weights

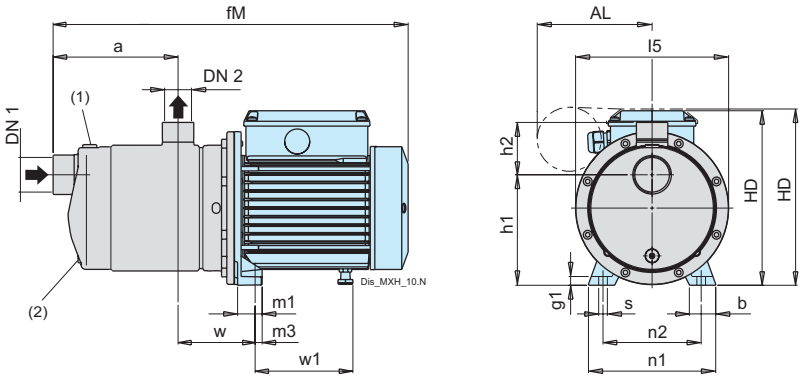


| TYPE | | | mm | | | | | | | | | | | | | | | kg |
|---|---|---|---|---|---|---|---|---|---|---|---|---|---|---|---|---|---|---|
| | DN1 | DN2 | a | b | fM | g1 | h1 | h2 | HD | l5 | m1 | m3 | n1 | n2 | s | w | w1 | Weight |
| **MXHL 202E** | G 1 1/4 | G 1 | 95 | 30 | 332 | 10 | 126 | 57 | 178 | 160 | 28 | 8 | 146 | 112 | 9.5 | 88 | 102 | 6.6 |
| **MXHL 203E** | G 1 1/4 | G 1 | 95 | 30 | 332 | 10 | 126 | 57 | 178 | 160 | 28 | 8 | 146 | 112 | 9.5 | 88 | 102 | 7.5 |
| **MXHL 204/A** | G 1 1/4 | G 1 | 119 | 30 | 382 | 10 | 126 | 57 | 192 | 160 | 28 | 8 | 146 | 112 | 9.5 | 88 | 113 | 10.3 |
| **MXHL 205/B** | G 1 1/4 | G 1 | 143 | 30 | 406 | 10 | 126 | 57 | 192 | 160 | 28 | 8 | 146 | 112 | 9.5 | 88 | 113 | 12.9 |
| **MXHL 206/C** | G 1 1/4 | G 1 | 167 | 30.5 | 501 | 10.5 | 127 | 57 | 212 | 160 | 29.5 | 10 | 146 | 112 | 9.5 | 88 | 154 | 16.8 |
| **MXHL 402E** | G 1 1/4 | G 1 | 95 | 30 | 332 | 10 | 126 | 57 | 178 | 160 | 28 | 8 | 146 | 112 | 9.5 | 88 | 102 | 7.1 |
| **MXHL 403/A** | G 1 1/4 | G 1 | 95 | 30 | 358 | 10 | 126 | 57 | 192 | 160 | 28 | 8 | 146 | 112 | 9.5 | 88 | 113 | 9.6 |
| **MXHL 404/B** | G 1 1/4 | G 1 | 119 | 30 | 382 | 10 | 126 | 57 | 192 | 160 | 28 | 8 | 146 | 112 | 9.5 | 88 | 113 | 12.3 |
| **MXHL 405/C** | G 1 1/4 | G 1 | 143 | 30.5 | 477 | 10.5 | 127 | 57 | 212 | 160 | 29.5 | 10 | 146 | 112 | 9.5 | 88 | 154 | 16.1 |
| **MXHL 406/A** | G 1 1/4 | G 1 | 167 | 30.5 | 501 | 10.5 | 127 | 57 | 212 | 160 | 29.5 | 10 | 146 | 112 | 9.5 | 88 | 154 | 18.2 |
| **MXHL 802/B** | G 1 1/2 | G 1 | 118 | 30 | 381 | 10 | 126 | 57 | 192 | 160 | 28 | 8 | 146 | 112 | 9.5 | 88 | 113 | 11.7 |
| **MXHL 803/A** | G 1 1/2 | G 1 | 118 | 30.5 | 452 | 10.5 | 127 | 57 | 212 | 160 | 29.5 | 10 | 146 | 112 | 9.5 | 88 | 154 | 15.1 |
| **MXHL 804/A** | G 1 1/2 | G 1 | 148 | 30.5 | 482 | 10.5 | 127 | 57 | 212 | 160 | 29.5 | 10 | 146 | 112 | 9.5 | 88 | 154 | 17.3 |
| **MXHL 805/B** | G 1 1/2 | G 1 | 178 | 30.5 | 552 | 10.5 | 127 | 57 | 212 | 160 | 29.5 | 10 | 146 | 112 | 9.5 | 88 | 194 | 21.2 |

| TYPE | | | mm | | | | | | | | | | | | | | | | kg |
|---|---|---|---|---|---|---|---|---|---|---|---|---|---|---|---|---|---|---|---|
| | DN1 | DN2 | a | AL | b | fM | g1 | h1 | h2 | HD | l5 | m1 | m3 | n1 | n2 | s | w | w1 | Weight |
| **MXHLM 202E** | G 1 1/4 | G 1 | 95 | - | 30 | 332 | 10 | 126 | 57 | 178 | 160 | 28 | 8 | 146 | 112 | 9.5 | 88 | 102 | 6.6 |
| **MXHLM 203E** | G 1 1/4 | G 1 | 95 | - | 30 | 332 | 10 | 126 | 57 | 178 | 160 | 28 | 8 | 146 | 112 | 9.5 | 88 | 102 | 7.6 |
| **MXHLM 204/A** | G 1 1/4 | G 1 | 119 | - | 30 | 382 | 10 | 126 | 57 | 192 | 160 | 28 | 8 | 146 | 112 | 9.5 | 88 | 113 | 11.2 |
| **MXHLM 205/A** | G 1 1/4 | G 1 | 143 | - | 30 | 406 | 10 | 126 | 57 | 192 | 160 | 28 | 8 | 146 | 112 | 9.5 | 88 | 113 | 12.8 |
| **MXHLM 206** | G 1 1/4 | G 1 | 167 | - | 30.5 | 501 | 10.5 | 127 | 57 | 212 | 160 | 29.5 | 10 | 146 | 112 | 9.5 | 88 | 154 | 16.8 |
| **MXHLM 402E** | G 1 1/4 | G 1 | 95 | - | 30 | 332 | 10 | 126 | 57 | 178 | 160 | 28 | 8 | 146 | 112 | 9.5 | 88 | 102 | 7.2 |
| **MXHLM 403/A** | G 1 1/4 | G 1 | 95 | - | 30 | 358 | 10 | 126 | 57 | 192 | 160 | 28 | 8 | 146 | 112 | 9.5 | 88 | 113 | 10.7 |
| **MXHLM 404/A** | G 1 1/4 | G 1 | 119 | - | 30 | 382 | 10 | 126 | 57 | 192 | 160 | 28 | 8 | 146 | 112 | 9.5 | 88 | 113 | 12.2 |
| **MXHLM 405** | G 1 1/4 | G 1 | 143 | - | 30.5 | 477 | 10.5 | 127 | 57 | 212 | 160 | 29.5 | 10 | 146 | 112 | 9.5 | 88 | 154 | 16.1 |
| **MXHLM 406** | G 1 1/4 | G 1 | 167 | - | 30.5 | 501 | 10.5 | 127 | 57 | 212 | 160 | 29.5 | 10 | 146 | 112 | 9.5 | 88 | 154 | 18.5 |
| **MXHLM 802/A** | G 1 1/2 | G 1 | 118 | - | 30 | 381 | 10 | 126 | 57 | 192 | 160 | 28 | 8 | 146 | 112 | 9.5 | 88 | 113 | 11.9 |
| **MXHLM 803** | G 1 1/2 | G 1 | 118 | - | 30.5 | 452 | 10.5 | 127 | 57 | 212 | 160 | 29.5 | 10 | 146 | 112 | 9.5 | 88 | 154 | 15.2 |
| **MXHLM 804** | G 1 1/2 | G 1 | 148 | - | 30.5 | 482 | 10.5 | 127 | 57 | 212 | 160 | 29.5 | 10 | 146 | 112 | 9.5 | 88 | 154 | 17.6 |
| **MXHLM 805/A** | G 1 1/2 | G 1 | 178 | 131 | 30.5 | 552 | 10.5 | 127 | 57 | 217 | 160 | 29.5 | 10 | 146 | 112 | 9.5 | 88 | 194 | 21.6 |

(1) Filling (2) Draining

# MXH

## Dimensions and weight

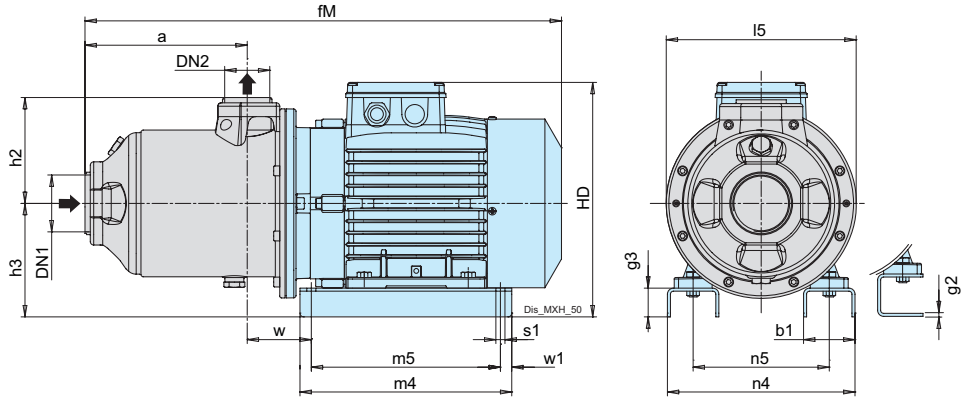


| TYPE | | | mm | | | | | | | | | | | | | | | kg |
|---|---|---|---|---|---|---|---|---|---|---|---|---|---|---|---|---|---|---|
| | DN1 | DN2 | a | b1 | fM | g2 | g3 | h1 | HD | l5 | m4 | m5 | n4 | n5 | s1 | w | w1 | Weight |
| **MXH 2001/A** | G 2" | G 1 1/2" | 127 | 54 | 467 | 6 | - | 150 | 280 | 250 | 205 | 175 | 165 | 125 | 10 | 95 | 15 | 24 |
| **MXH 2002/A** | G 2" | G 1 1/2" | 127 | 54 | 507 | 6 | - | 150 | 280 | 250 | 205 | 175 | 165 | 125 | 10 | 95 | 15 | 29.7 |
| **MXH 2003** | G 2" | G 1 1/2" | 146 | 54 | 540 | 6 | - | 150 | 290 | 250 | 205 | 175 | 180 | 140 | 10 | 114 | 15 | 37.4 |
| **MXH 2004/A** | G 2" | G 1 1/2" | 181 | 54 | 575 | 6 | - | 150 | 290 | 250 | 205 | 175 | 180 | 140 | 10 | 114 | 15 | - |
| **MXH 2005** | G 2" | G 1 1/2" | 215 | 68 | 662 | - | 38 | 150 | 317 | 250 | 280 | 250 | 258 | 190 | 12 | 83.5 | 15 | 54.3 |
| **MXH 3201/B** | G 2 1/2" | G 2" | 123 | 54 | 503 | 6 | - | 150 | 280 | 250 | 205 | 175 | 165 | 125 | 10 | 95 | 15 | 28.6 |
| **MXH 3202/B** | G 2 1/2" | G 2" | 123 | 54 | 517 | 6 | - | 150 | 290 | 250 | 205 | 175 | 180 | 140 | 10 | 114 | 15 | 37.8 |
| **MXH 3203/A** | G 2 1/2" | G 2" | 169 | 68 | 616 | - | 38 | 150 | 317 | 250 | 280 | 250 | 258 | 190 | 12 | 83.5 | 15 | 52.1 |
| **MXH 3204/A** | G 2 1/2" | G 2" | 215 | 68 | 662 | - | 38 | 150 | 317 | 250 | 280 | 250 | 258 | 190 | 12 | 83.5 | 15 | 63 |
| **MXH 4801/A** | G 3" | G 2 1/2" | 139 | 54 | 548 | 6 | - | 150 | 290 | 250 | 205 | 175 | 180 | 140 | 10 | 129 | 15 | - |
| **MXH 4802/A** | G 3" | G 2 1/2" | 139 | 68 | 601 | - | 38 | 150 | 317 | 250 | 280 | 250 | 258 | 190 | 12 | 98.5 | 15 | - |
| **MXH 4803/A** | G 3" | G 2 1/2" | 200 | 68 | 662 | - | 38 | 150 | 317 | 250 | 280 | 250 | 258 | 190 | 12 | 98.5 | 15 | - |

# MXH

## Dimensions and weight

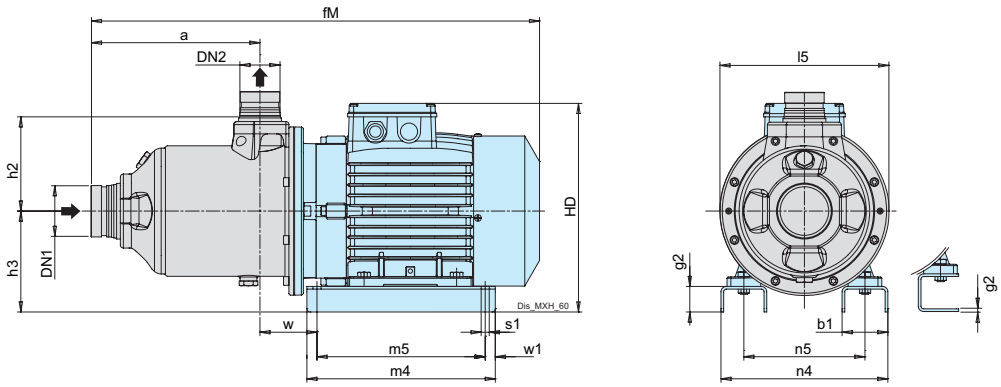


| TYPE | | | mm | | | | | | | | | | | | | | | | kg |
|---|---|---|---|---|---|---|---|---|---|---|---|---|---|---|---|---|---|---|---|
| | DN1 | DN2 | a | b1 | fM | g2 | h1 | h2 | h3 | HD | l5 | m4 | m5 | n4 | n5 | s1 | w | w1 | Weight |
| **MXH-V 3201/B** | 76,1 (DN65) | 60,3 (DN50) | 160 | 54 | 540 | 6 | 150 | 177 | 150 | 280 | 250 | 205 | 175 | 165 | 125 | 10 | 95 | 15 | 30 |
| **MXH-V 3202/B** | 76,1 (DN65) | 60,3 (DN50) | 160 | 54 | 554 | 6 | 150 | 177 | 150 | 290 | 250 | 205 | 175 | 180 | 140 | 10 | 114 | 15 | 39.8 |
| **MXH-V 3203/A** | 76,1 (DN65) | 60,3 (DN50) | 191 | 68 | 622 | 38 | 150 | 177 | 150 | 312 | 250 | 280 | 250 | 258 | 190 | 12 | 97.5 | 15 | - |
| **MXH-V 3204/A** | 76,1 (DN65) | 60,3 (DN50) | 237 | 68 | 668 | 38 | 150 | 177 | 150 | 312 | 250 | 280 | 250 | 258 | 190 | 12 | 97.5 | 15 | - |
| **MXH-V 4801/A** | 88,9 (DN 80) | 76,1 (DN65) | 175 | 54 | 584 | 6 | 150 | 177 | 150 | 290 | 250 | 205 | 175 | 180 | 140 | 10 | 129 | 15 | 37.2 |
| **MXH-V 4802/A** | 88,9 (DN 80) | 76,1 (DN65) | 175 | 68 | 606 | 38 | 150 | 177 | 150 | 312 | 250 | 280 | 250 | 258 | 190 | 12 | 97.5 | 15 | - |
| **MXH-V 4803/A** | 88,9 (DN 80) | 76,1 (DN65) | 237 | 68 | 668 | 38 | 150 | 177 | 150 | 312 | 250 | 280 | 250 | 258 | 190 | 12 | 97.5 | 15 | - |

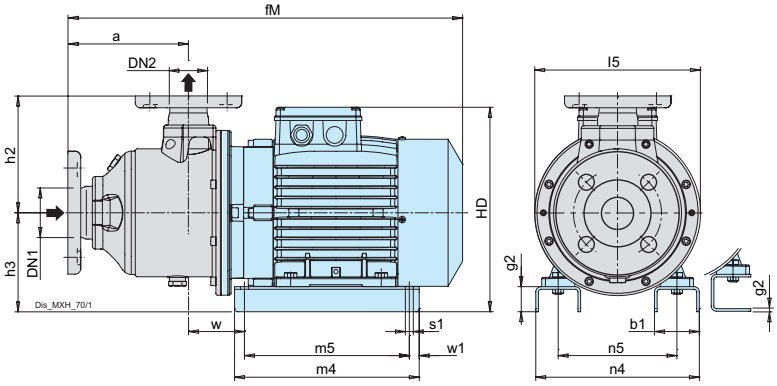


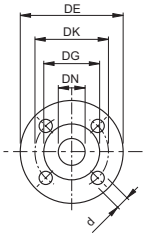


EN 1092-1 compatible flanges*

| mm | | | | | |
|---|---|---|---|---|---|
| DN | DG | DK | DE | Holes | |
| | | | | N° | ø |
| 40 | 81 | 110 | 150 | 4 | 19 |
| 50 | 99 | 125 | 165 | 4 | 19 |
| 65 | 118 | 145 | 185 | 4 | 19 |
| 80 | 132 | 160 | 200 | 8 | 19 |

* ASME 150 lb (ex ANSI 150 lb)

| TYPE | | | mm | | | | | | | | | | | | | | | kg |
|---|---|---|---|---|---|---|---|---|---|---|---|---|---|---|---|---|---|---|
| | DN1 | DN2 | a | b1 | fM | g2 | g3 | h1 | HD | l5 | m4 | m5 | n4 | n5 | s1 | w | w1 | Weight |
| **MXH-F 2001/A** | 50 | 40 | 161 | 54 | 501 | 6 | - | 150 | 280 | 250 | 205 | 175 | 165 | 125 | 10 | 95 | 15 | - |
| **MXH-F 2002/A** | 50 | 40 | 161 | 54 | 541 | 6 | - | 150 | 280 | 250 | 205 | 175 | 165 | 125 | 10 | 95 | 15 | - |
| **MXH-F 2003** | 50 | 40 | 181 | 54 | 575 | 6 | - | 150 | 290 | 250 | 205 | 175 | 180 | 140 | 10 | 114 | 15 | - |
| **MXH-F 2004/A** | 50 | 40 | 215 | 54 | 609 | 6 | - | 150 | 290 | 250 | 205 | 175 | 180 | 140 | 10 | 114 | 15 | 46.7 |
| **MXH-F 2005** | 50 | 40 | 250 | 68 | 697 | - | 38 | 150 | 317 | 250 | 280 | 250 | 258 | 190 | 12 | 83.5 | 15 | - |
| **MXH-F 3201/B** | 65 | 50 | 151 | 54 | 531 | 6 | - | 150 | 280 | 250 | 205 | 175 | 165 | 125 | 10 | 95 | 15 | 30.7 |
| **MXH-F 3202/B** | 65 | 50 | 151 | 54 | 545 | 6 | - | 150 | 290 | 250 | 205 | 175 | 180 | 140 | 10 | 114 | 15 | - |
| **MXH-F 3203/A** | 65 | 50 | 197 | 68 | 644 | - | 38 | 150 | 317 | 250 | 280 | 250 | 258 | 190 | 12 | 83.5 | 15 | 54.1 |
| **MXH-F 3204/A** | 65 | 50 | 243 | 68 | 690 | - | 38 | 150 | 317 | 250 | 280 | 250 | 258 | 190 | 12 | 83.5 | 15 | 61 |
| **MXH-F 4801/A** | 80 | 65 | 156 | 54 | 565 | 6 | - | 150 | 290 | 250 | 205 | 175 | 180 | 140 | 10 | 129 | 15 | 38 |
| **MXH-F 4802/A** | 80 | 65 | 156 | 68 | 618 | - | 38 | 150 | 317 | 250 | 280 | 250 | 258 | 190 | 12 | 98.5 | 15 | 54.1 |
| **MXH-F 4803/A** | 80 | 65 | 218 | 68 | 680 | - | 38 | 150 | 317 | 250 | 280 | 250 | 258 | 190 | 12 | 98.5 | 15 | - |

# MXH

## Dimensions and weights

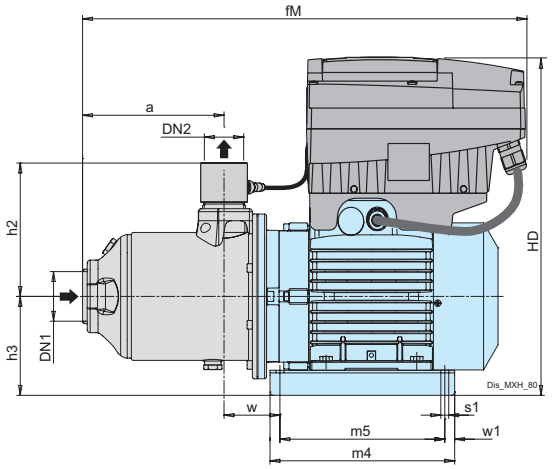


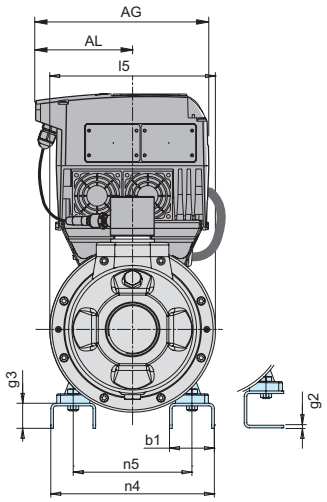


| TYPE | | | mm | | | | | | | | | | | | | | | | kg |
|---|---|---|---|---|---|---|---|---|---|---|---|---|---|---|---|---|---|---|---|
| | DN1 | DN2 | a | AG | AL | b1 | fM | g2 | H | h2 | h3 | m4 | m5 | n4 | n5 | s1 | w | w1 | Weight |
| **MXH EI 2001/A** | G 2 | G 1 ½ | 127 | 190 | 105 | 54 | 507 | 6 | 435 | 192.5 | 150 | 205 | 175 | 179 | 125 | 10 | 95 | 15 | - |
| **MXH EI 2002/A** | G 2 | G 1 1/2 | 127 | 210 | 117.5 | 54 | 536 | 6 | 435 | 192.5 | 150 | 205 | 175 | 179 | 125 | 10 | 95 | 15 | - |
| **MXH EI 2003** | G 2 | G 1 1/2 | 146 | 210 | 117.5 | 54 | 559 | 6 | 445 | 192.5 | 150 | 205 | 175 | 194 | 140 | 10 | 114 | 15 | 45 |
| **MXH EI 2004/A** | G 2 | G 1 1/2 | 181 | 210 | 117.5 | 54 | 594 | 6 | 445 | 192.5 | 150 | 205 | 175 | 194 | 140 | 10 | 114 | 15 | - |
| **MXH EI 2005** | G 2 | G 1 1/2 | 215 | 210 | 117.5 | 68 | 632 | 38 | 470 | 192.5 | 150 | 280 | 250 | 258 | 190 | 10 | 112.5 | 15 | - |
| **MXH EI 3201/B** | G 2 1/2 | G 2 | 123 | 210 | 117.5 | 54 | 533 | 6 | 435 | 197 | 150 | 205 | 175 | 179 | 125 | 10 | 95 | 15 | - |
| **MXH EI 3202/B** | G 2 1/2 | G 2 | 123 | 210 | 117.5 | 54 | 536 | 6 | 445 | 197 | 150 | 205 | 175 | 194 | 140 | 10 | 114 | 15 | 47 |
| **MXH EI 3203/A** | G 2 1/2 | G 2 | 154 | 210 | 117.5 | 68 | 586 | 38 | 470 | 197 | 150 | 280 | 250 | 258 | 190 | 10 | 127.5 | 15 | - |
| **MXH EI 3204/A** | G 2 1/2 | G 2 | 200 | 281 | 153.5 | 68 | 676 | 38 | 512 | 197 | 150 | 280 | 250 | 258 | 190 | 10 | 127.5 | 15 | - |
| **MXH EI 4801/A** | G 3 | G 2 1/2 | 139 | 210 | 117.5 | 54 | 567 | 6 | 445 | 202.5 | 150 | 205 | 175 | 194 | 140 | 10 | 129 | 15 | 44.4 |
| **MXH EI 4802/A** | G 3 | G 2 1/2 | 139 | 210 | - | 68 | 570 | 38 | 470 | 202.5 | 150 | 280 | 250 | 258 | 190 | 10 | 127.5 | 15 | - |
| **MXH EI 4803/A** | G 3 | G 2 1/2 | 200 | 281 | 153.5 | 68 | 676 | 38 | 512 | 202.5 | 150 | 280 | 250 | 258 | 190 | 10 | 127.5 | 15 | - |

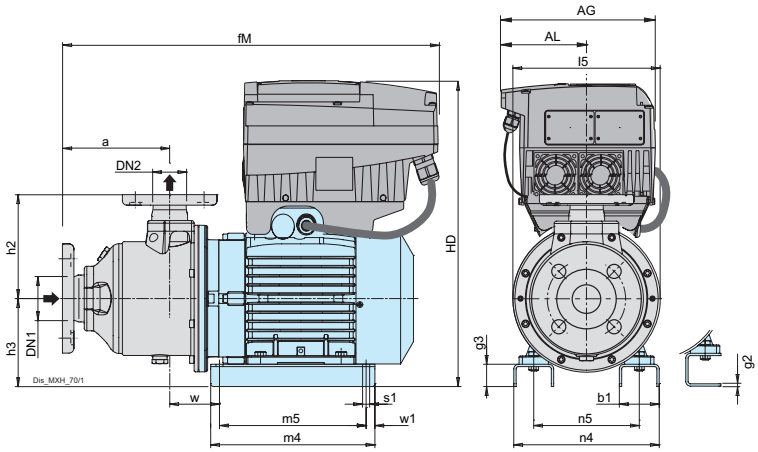


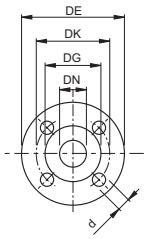


EN 1092-1 compatible flanges*

| mm | | | | | |
|---|---|---|---|---|---|
| DN | DG | DK | DE | Holes | |
| | | | | N° | ø |
| 40 | 81 | 110 | 150 | 4 | 19 |
| 50 | 99 | 125 | 165 | 4 | 19 |
| 65 | 118 | 145 | 185 | 4 | 19 |
| 80 | 132 | 160 | 200 | 8 | 19 |

* ASME 150 lb (ex ANSI 150 lb)

| TYPE | | | mm | | | | | | | | | | | | | | | | kg |
|---|---|---|---|---|---|---|---|---|---|---|---|---|---|---|---|---|---|---|---|
| | DN1 | DN2 | a | AG | AL | b1 | fM | g2 | H | h2 | h3 | m4 | m5 | n4 | n5 | s1 | w | w1 | Weight |
| **MXH-F EI 2002/A** | 50 | 40 | 161 | 210 | 117.5 | 54 | 571 | 6 | 435 | 175 | 150 | 205 | 175 | 179 | 125 | 10 | 95 | 15 | - |
| **MXH-F EI 2003** | 50 | 40 | 181 | 210 | 117.5 | 54 | 594 | 6 | 445 | 175 | 150 | 205 | 175 | 194 | 140 | 10 | 114 | 15 | - |
| **MXH-F EI 2004/A** | 50 | 40 | 215 | 210 | 117.5 | 54 | 628 | 6 | 445 | 175 | 150 | 205 | 175 | 194 | 140 | 10 | 114 | 15 | - |
| **MXH-F EI 2005** | 50 | 40 | 250 | 210 | 117.5 | 68 | 666 | 38 | 470 | 175 | 150 | 280 | 250 | 258 | 190 | 10 | 112.5 | 15 | - |
| **MXH-F EI 3201/B** | 65 | 50 | 151 | 210 | 117.5 | 54 | 560 | 6 | 435 | 175 | 150 | 205 | 175 | 179 | 125 | 10 | 95 | 15 | - |
| **MXH-F EI 3202/B** | 65 | 50 | 151 | 210 | 117.5 | 54 | 564 | 6 | 445 | 175 | 150 | 205 | 175 | 194 | 140 | 10 | 114 | 15 | 47.5 |
| **MXH-F EI 3203/A** | 65 | 50 | 182 | 210 | 117.5 | 68 | 613 | 38 | 470 | 175 | 150 | 280 | 250 | 258 | 190 | 10 | 127.5 | 15 | 61.5 |
| **MXH-F EI 3204/A** | 65 | 50 | 228 | 281 | 153.5 | 68 | 703 | 38 | 512 | 175 | 150 | 280 | 250 | 258 | 190 | 10 | 127.5 | 15 | - |
| **MXH-F EI 4801/A** | 80 | 65 | 156 | 210 | 117.5 | 54 | 584 | 6 | 445 | 175 | 150 | 205 | 175 | 194 | 140 | 10 | 129 | 15 | - |
| **MXH-F EI 4802/A** | 80 | 65 | 156 | 210 | 117.5 | 68 | 588 | 38 | 470 | 175 | 150 | 280 | 250 | 258 | 190 | 10 | 127.5 | 15 | - |
| **MXH-F EI 4803/A** | 80 | 65 | 218 | 281 | 153.5 | 68 | 693 | 38 | 512 | 175 | 150 | 280 | 250 | 258 | 190 | 10 | 127.5 | 15 | - |

# E-MXP

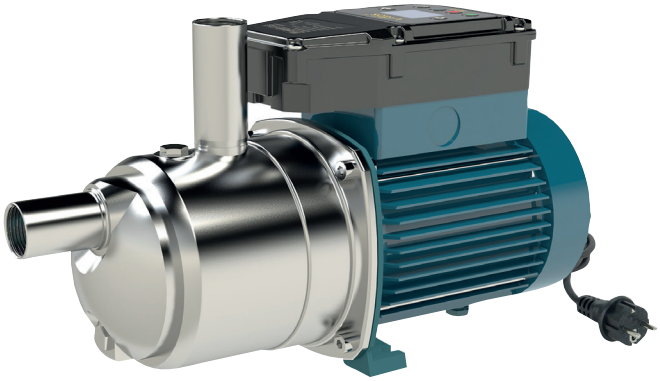

**Characteristic curves n ≈ 2900 rpm**

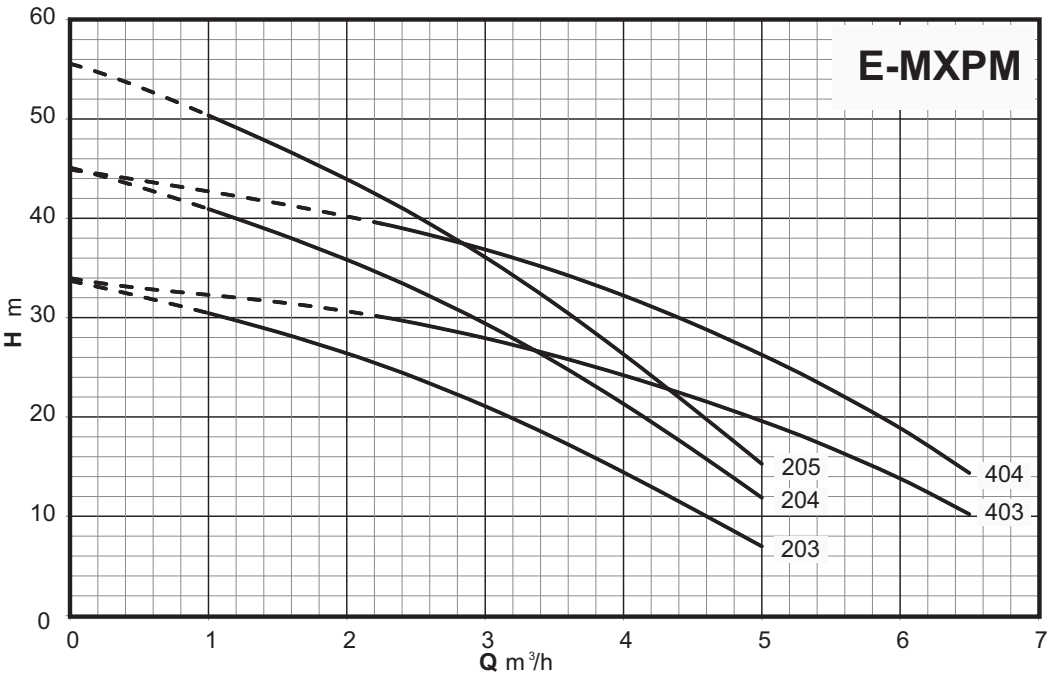


# Booster set with integrated control

# E-MXP

EASY TO INSTALL
Plug And play solution

ECONOMIC SAVING
High efficiency asynchronous motor 24% less energy consumption compared to a standard pump

EASY TO USE
Equipped with programmable software and an analog pressure sensor, this product allows for easy adjustment of the restart pressure. It is an ideal solution that helps reduce or eliminate the need for an expansion tank.

## Construction

Easy to install, compact and plug and play pressurized system with integrated pressure transducer for automatic control of starting/stopping of the pump when utilization points are opened/closed, equipped with an integrated non-return valve into the pump suction.

**Boosting sets with 2 pumps**
Galvanised steel intake and delivery manifolds.
Connections for the installation of one G 1" connection pressure vessel

## Applications

For water supply systems.
For domestic use, for garden use and irrigation.

## Features

high efficiency asynchronous motor
- capacitor less stressed in voltage
- uniform and lower motor temperature
- motor power control
- programmable re-start pressure
- programmable stop pressure
- no hydraulic losses due to the measuring devices
- voltage and current control
- monitoring of maximum starting current

## Protections

- dry-run protection
- overload control and overheating motor control
- pump blockage
- power supply control
- starts per hour control

## Operating conditions

Liquid temperature: 0 °C to +50 °C.
Ambient temperature up to 40° C.
Maximum permissible pressure in the pump casing: 8 bar.
Continuous duty.

## Motor

2-pole induction motor, 50 Hz (n ≈ 2900 rpm).
Single-phase 230 V ± 10%, with thermal protector.
Capacitor inside the terminal box.
H07RN-F cable, 3G1.5 mm2, length 1.5 m, with CEI-UNEL 47166 plug.
**IE2 efficiency class for single-phase motors.**
Insulation class F.
Protection IP X4.
Constructed in accordance with EN 60034-1, EN 60335-1, EN 60335-2-41.

## Materials

| Components | Material |
|---|---|
| Pump casing | Chrome-nickel steel 1.4301 EN 10088 (AISI 304) |
| Casing cover | Chrome-nickel steel 1.4301 EN 10088 (AISI 304) |
| Pump shaft | Steel 1.4104 EN 10088 (AISI 430F) |
| Plug | Chrome-nickel steel 1.4305 EN 10088 (AISI 303) |
| Stage casing | PPO-GF20 (Noryl) |
| Impeller | PPO-GF20 (Noryl) |
| Mechanical seal | Carbon - Ceramic - NBR |

# E-MXP

## Coverage chart n ≈ 2900 rpm

### Single-phase

| | | | | | Q = Flow | | | | | | | | | | | | | |
|---|---|---|---|---|---|---|---|---|---|---|---|---|---|---|---|---|---|---|
| | | | | | m³/h | 0 | 1 | 1,5 | 2 | 2,25 | 3 | 3,5 | 4 | 4,5 | 5 | 5,4 | 6 | 6,5 |
| Model | 230V | P2 | | P1 | l/min | | 16,6 | 25 | 33,3 | 37,5 | 50 | 58,3 | 66,6 | 75 | 83,3 | 90 | 100 | 108 |
| | A | kW | HP | kW | H (m) = Total head | | | | | | | | | | | | | |
| E-MXPM 203-PCD | 2,7 | 0,45 | 0,6 | 0,67 | | 33,7 | 30,5 | 28,6 | 26,4 | 25,2 | 21,1 | 17,9 | 14,4 | 10,8 | 7 | - | - | - |
| E-MXPM 204-PCD | 3,8 | 0,55 | 0,75 | 0,78 | | 45,1 | 40,9 | 38,5 | 35,8 | 34,4 | 29,4 | 25,6 | 21,3 | 16,7 | 11,9 | - | - | - |
| E-MXPM 205-PCD | 4,8 | 0,75 | 1 | 1,01 | | 55,6 | 50,4 | 47,3 | 43,9 | 42,1 | 36,1 | 31,4 | 26,3 | 20,9 | 15,3 | - | - | - |
| E-MXPM 403-PCD | 3,8 | 0,55 | 0,75 | 0,78 | | 34 | - | - | - | 30,1 | 27,9 | 26,2 | 24,2 | 22 | 19,6 | 17,5 | 13,8 | 10,2 |
| E-MXPM 404-PCD | 4,8 | 0,75 | 1 | 1,01 | | 44,9 | - | - | - | 39,5 | 36,9 | 34,7 | 32,2 | 29,4 | 26,3 | 23,5 | 18,9 | 14,4 |

**P1:** Maximum power input.
**P2:** Rated motor power output.
**H:** Total head in m

**Test results with clean cold water, without gas content.**
A safety margin of + 0.5 m is recommended for the NPSH value.
Tolerances according to UNI EN ISO 9906:2012

## Dimensions and weights

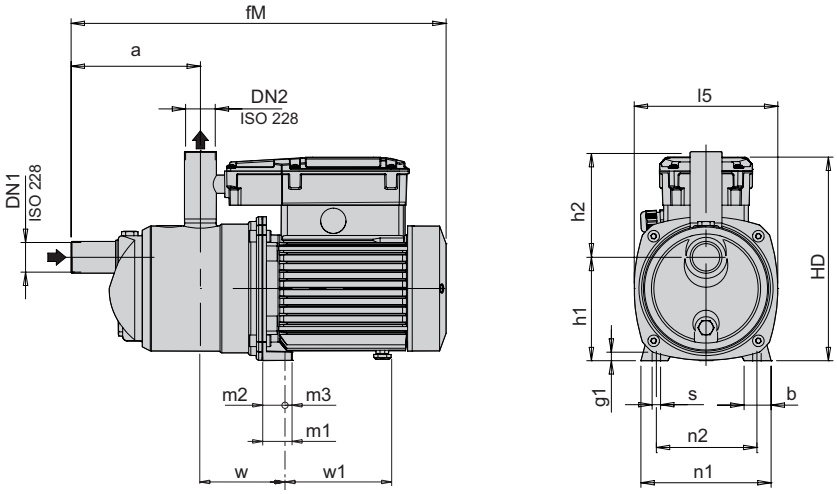


| TYPE | ISO 228 | | mm | | | | | | | | | | | | | | | | kg |
|---|---|---|---|---|---|---|---|---|---|---|---|---|---|---|---|---|---|---|---|
| | DN1 | DN2 | a | b | fM | g1 | h1 | h2 | HD | l5 | m1 | m2 | m3 | n1 | n2 | s | w | w1 | Weight |
| **E-MXPM 203-PCD** | G 1 | G 1 | 145 | 30 | 420 | 10 | 116 | 119 | 228 | 161 | 33 | 25 | 8 | 146 | 112.5 | 9 | 95 | 109 | 9.5 |
| **E-MXPM 204-PCD** | G 1 | G 1 | 145 | 30 | 420 | 10 | 116 | 119 | 228 | 161 | 33 | 25 | 8 | 146 | 112.5 | 9 | 95 | 109 | 10.7 |
| **E-MXPM 205-PCD** | G 1 | G 1 | 145 | 30 | 420 | 10 | 116 | 119 | 228 | 161 | 33 | 25 | 8 | 146 | 112.5 | 9 | 95 | 109 | 11.5 |
| **E-MXPM 403-PCD** | G 1 | G 1 | 145 | 30 | 420 | 10 | 116 | 119 | 228 | 161 | 33 | 25 | 8 | 146 | 112.5 | 9 | 95 | 109 | 10.6 |
| **E-MXPM 404-PCD** | G 1 | G 1 | 145 | 30 | 420 | 10 | 116 | 119 | 228 | 161 | 33 | 25 | 8 | 146 | 112.5 | 9 | 95 | 109 | 11.5 |

# E-MXP

## Coverage chart n ≈ 2900 rpm

### Single-phase

| | | | Q = Flow | | | | | | | | | | | | | |
|---|---|---|---|---|---|---|---|---|---|---|---|---|---|---|---|---|
| | | | m³/h | 0 | 2 | 3 | 4 | 4,5 | 6 | 7 | 8 | 9 | 10 | 10,8 | 12 | 13 |
| Model | P2 | P1 | l/min | | 33,3 | 50 | 66,6 | 75 | 100 | 117 | 133 | 150 | 167 | 180 | 200 | 217 |
| | kW | HP | H (m) = Total head | | | | | | | | | | | | | |
| BSM2F 2E MXPM 203-PCD | 0.45 X2 | 0,56 | | 33,7 | 30,5 | 28,6 | 26,4 | 25,2 | 21,1 | 17,9 | 14,4 | 10,8 | 7 | - | - | - |
| BSM2F 2E MXPM 204-PCD | 0.55 X2 | 0,7 | | 45,1 | 40,9 | 38,5 | 35,8 | 34,4 | 29,4 | 25,6 | 21,3 | 16,7 | 11,9 | - | - | - |
| BSM2F 2E MXPM 205-PCD | 0.75 X2 | 0,89 | | 55,6 | 50,4 | 47,3 | 43,9 | 42,1 | 36,1 | 31,4 | 26,3 | 20,9 | 15,3 | - | - | - |
| BSM2F 2E MXPM 403-PCD | 0.55 X2 | 0,75 | | 34 | - | - | - | 30,1 | 27,9 | 26,2 | 24,2 | 22 | 19,6 | 17,5 | 13,8 | 10,2 |
| BSM2F 2E MXPM 404-PCD | 0.75 X2 | 1,05 | | 44,9 | - | - | - | 39,5 | 36,9 | 34,7 | 32,2 | 29,4 | 26,3 | 23,5 | 18,9 | 14,4 |

**P1:** Maximum power input.
**P2:** Rated motor power output.
**H:** Total head in m

**Test results with clean cold water, without gas content.**
A safety margin of + 0.5 m is recommended for the NPSH value.
Tolerances according to UNI EN ISO 9906:2012

## Dimensions and weights

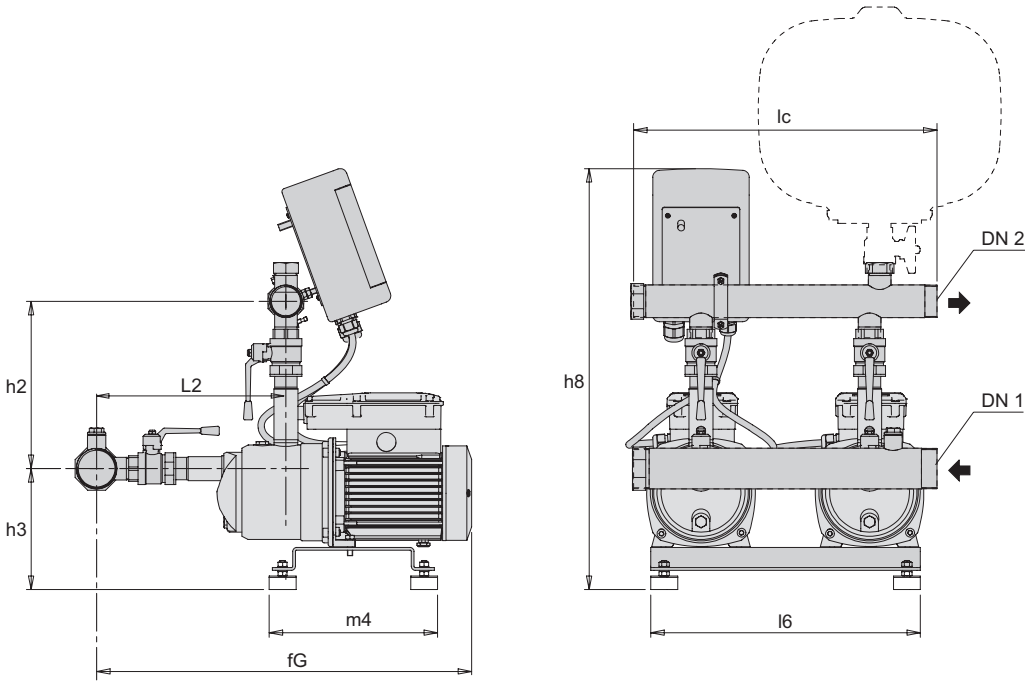


| TYPE | | | mm | | | | | | | | kg |
|---|---|---|---|---|---|---|---|---|---|---|---|
| | DN1 | DN2 | fG | h2 | h3 | h8 | l2 | l6 | lc | m4 | Weight |
| **BSM2F2EMXPM203PCD** | G 2 | G 1 1/2 | 588 | 248 | 179 | 625 | 281 | 400 | 450 | 250 | 31.4 |
| **BSM2F2EMXPM204PCD** | G 2 | G 1 1/2 | 588 | 248 | 179 | 625 | 281 | 400 | 450 | 250 | 33.2 |
| **BSM2F2EMXPM205PCD** | G 2 | G 1 1/2 | 588 | 248 | 179 | 625 | 281 | 400 | 450 | 250 | 35.5 |
| **BSM2F2EMXPM403PCD** | G 2 | G 1 1/2 | 588 | 248 | 179 | 625 | 281 | 400 | 450 | 250 | - |
| **BSM2F2EMXPM404PCD** | G 2 | G 1 1/2 | 588 | 248 | 179 | 625 | 281 | 400 | 450 | 250 | 35.2 |

**Coverage chart n ≈ 2900 rpm**

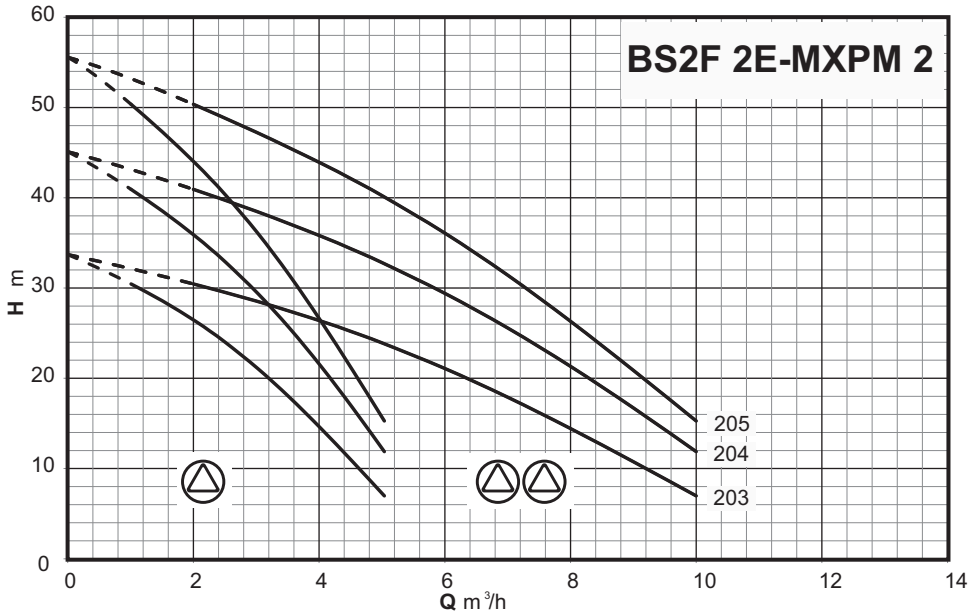


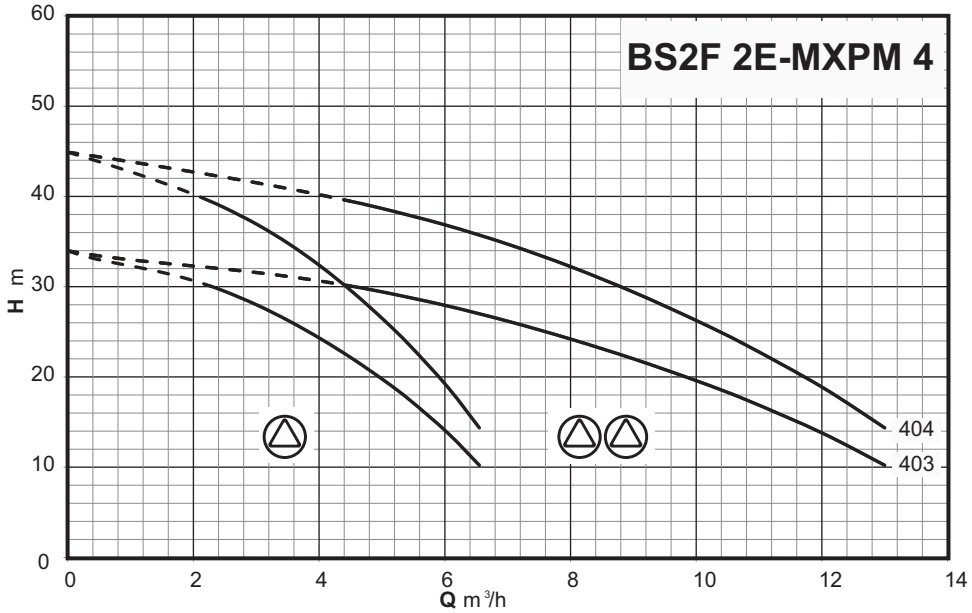

# MXP

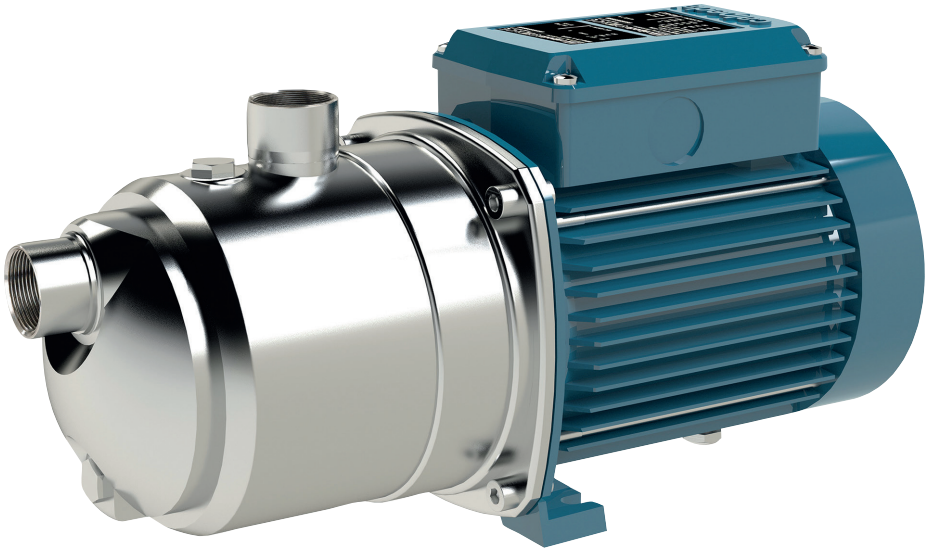

**Characteristic curves n ≈ 2800 1/min**

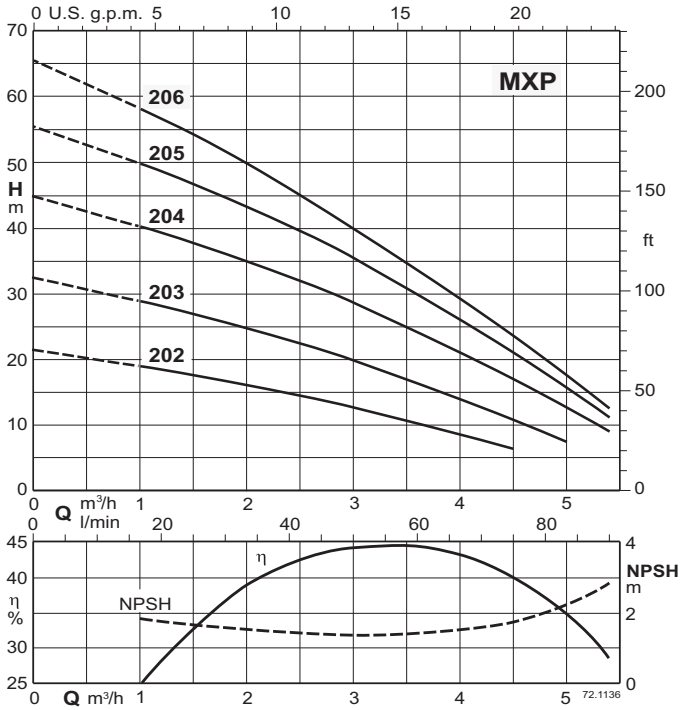


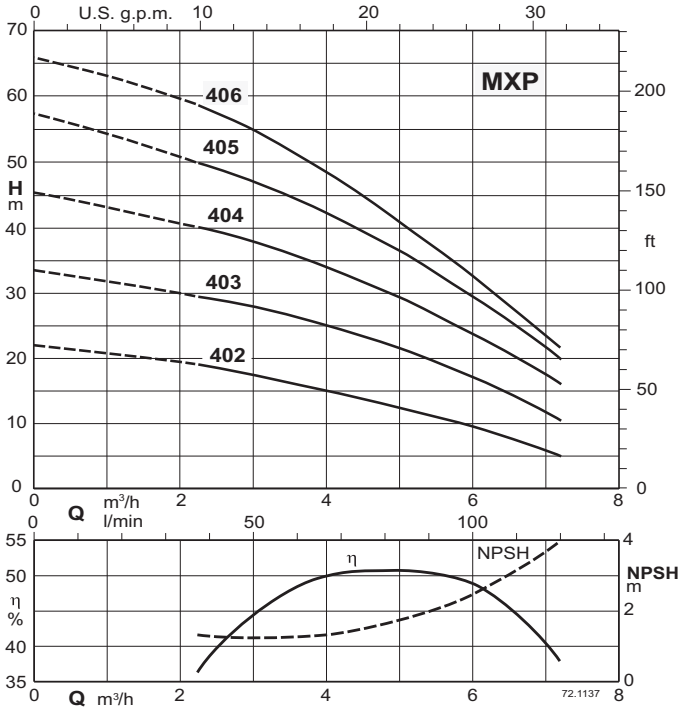


# Horizontal multi-stage close coupled pumps

# MXP

calpeda®

## Construction

Horizontal Multi-Stage Close Coupled Pumps
One-piece chrome-nickel stainless steel pump body, open on one side (barrel casing), with front suction port above the pump axis and radial delivery port at the top.
Stages in Noryl.

## Applications

For water supply systems.
For domestic use, for garden use and irrigation.

## Operating conditions

Liquid temperature: 0 °C to +50 °C.
Ambient temperature up to 40° C.
Maximum permissible pressure in the pump casing: 8 bar.
Continuous duty.

## Motor

2-pole induction motor, 50 Hz (n ≈ 2800 1/min).
**MXP:** three-phase 230/400 V ± 10%.
**MXPM:** single-phase 230 V ± 10%, with thermal protector.
Capacitor inside the terminal box.
Insulation class F.
Protection IP 54.
Motor set up for operation with 1.1 kW inverter.
**IE2 efficiency class for single-phase motors.**
**IE3 efficiency class for three-phase motors (IE2 up to 0,65 kW).**
Constructed in accordance with EN 60034-1; EN 60034-30-1.
EN 60335-1, EN 60335-2-41.

## Special features on request

Other voltages.
Frequency 60 Hz (as per 60 Hz data sheet).
Motor suitable for operation with frequency converter up to 0,75 kW.

## Designation

Example: MXP 206/B
MXP = Series
2 = Rated flaw in m3/h
06 = Number of impellers
/B = It refers to a revision

## Materials

| Components | Material |
|---|---|
| Pump casing | Chrome-nickel steel 1.4301 EN 10088 (AISI 304) |
| Casing cover | Chrome-nickel steel 1.4301 EN 10088 (AISI 304) |
| Pump shaft | Steel 1.4104 EN 10088 (AISI 430F) |
| Plug | Chrome-nickel steel 1.4305 EN 10088 (AISI 303) |
| Stage casing | PPO-GF20 (Noryl) |
| Impeller | PPO-GF20 (Noryl) |
| Mechanical seal | Carbon - Ceramic - NBR |

## Performance n ≈ 2800 rpm

### Three-phase

| | | | | | Q = Flow | | | | | | | | | | | |
|---|---|---|---|---|---|---|---|---|---|---|---|---|---|---|---|---|
| | | | | | m³/h | 0 | 1 | 1,5 | 2 | 2,5 | 3 | 3,5 | 4 | 4,5 | 5 | 5,4 |
| Model | 230V | 400V | P2 | | l/min | | 16,6 | 25 | 33,3 | 41,6 | 50 | 58,3 | 66,6 | 75 | 83,3 | 90 |
| | A | | kW | HP | H (m) = Total head | | | | | | | | | | | |
| MXP 202 | 1,7 | 1 | 0,25 | 0,34 | | 21,5 | 19 | 17,5 | 16 | 14,5 | 12,5 | 10,5 | 8,5 | 6,5 | - | - |
| MXP 203 | 2,4 | 1,4 | 0,37 | 0,5 | | 32,5 | 29 | 27 | 25 | 22,5 | 20 | 17 | 14 | 11 | 7,5 | - |
| MXP 204/A | 2,8 | 1,6 | 0,55 | 0,75 | | 45 | 40 | 37,5 | 35 | 32 | 28,5 | 25 | 21,5 | 17 | 13 | 9 |
| MXP 205/A | 3,5 | 2 | 0,75 | 1 | | 56 | 50 | 46,5 | 43,5 | 40 | 35,5 | 31 | 26,5 | 21 | 16 | 11 |
| MXP 206 | 3,5 | 2 | 0,75 | 1 | | 65,6 | 58,1 | 54,2 | 49,7 | 44,9 | 39,7 | 34,5 | 29 | 23,4 | 17,3 | 12,3 |

### Single-phase

| | | | | | Q = Flow | | | | | | | | | | | |
|---|---|---|---|---|---|---|---|---|---|---|---|---|---|---|---|---|
| | | | | | m³/h | 0 | 1 | 1,5 | 2 | 2,5 | 3 | 3,5 | 4 | 4,5 | 5 | 5,4 |
| Model | 230V | P2 | | P1 | l/min | | 16,6 | 25 | 33,3 | 41,6 | 50 | 58,3 | 66,6 | 75 | 83,3 | 90 |
| | A | kW | HP | kW | H (m) = Total head | | | | | | | | | | | |
| MXPM 202 | 2,3 | 0,25 | 0,34 | 0,42 | | 21,5 | 19 | 17,5 | 16 | 14,5 | 12,5 | 10,5 | 8,5 | 6,5 | - | - |
| MXPM 203 | 3 | 0,37 | 0,5 | 0,57 | | 32,5 | 29 | 27 | 25 | 22,5 | 20 | 17 | 14 | 11 | 7,5 | - |
| MXPM 204/A | 4,5 | 0,55 | 0,75 | 0,78 | | 45 | 40 | 37,5 | 35 | 32 | 28,5 | 25 | 21,5 | 17 | 13 | 9 |
| MXPM 205 | 5,7 | 0,75 | 1 | 1,01 | | 56 | 50 | 46,5 | 43,5 | 40 | 35,5 | 31 | 26,5 | 21 | 16 | 11 |
| MXPM 206 | 5,7 | 0,75 | 1 | 1,01 | | 65,6 | 58,1 | 54,2 | 49,7 | 44,9 | 39,7 | 34,5 | 29 | 23,4 | 17,3 | 12,3 |

# MXP

calpeda®

## Three-phase

| Model | 230V | 400V | P2 | | Q = Flow | | | | | | | | | |
|---|---|---|---|---|---|---|---|---|---|---|---|---|---|---|
| | | | | | m³/h | 0 | 2,25 | 3 | 3,5 | 4 | 4,5 | 5 | 6 | 7,2 |
| | | | | | l/min | | 37,5 | 50 | 58,3 | 66,6 | 75 | 83,3 | 100 | 120 |
| | A | | kW | HP | H (m) = Total head | | | | | | | | | |
| MXP 402 | 2,4 | 1,4 | 0,37 | 0,5 | | 22 | 19 | 17,5 | 16,5 | 15 | 14 | 12,5 | 9,5 | 5 |
| MXP 403/A | 2,8 | 1,6 | 0,55 | 0,75 | | 33,5 | 30 | 28 | 26,5 | 25 | 23 | 21,5 | 17 | 10 |
| MXP 404/B | 3,5 | 2 | 0,75 | 1 | | 46 | 40 | 38 | 36,5 | 34 | 32 | 29,5 | 24 | 16 |
| MXP 405 | 4,5 | 2,6 | 1,1 | 1,5 | | 56 | 50 | 47 | 45 | 42 | 39,5 | 36 | 29,5 | 20 |
| MXP 406 | 4,5 | 2,6 | 1,1 | 1,5 | | 65,9 | 58,5 | 54,6 | 51,5 | 48,2 | 44,6 | 40,7 | 32,4 | 21,4 |

## Single-phase

| Model | 230V | P2 | | P1 | Q = Flow | | | | | | | | | |
|---|---|---|---|---|---|---|---|---|---|---|---|---|---|---|
| | | | | | m³/h | 0 | 2,25 | 3 | 3,5 | 4 | 4,5 | 5 | 6 | 7,2 |
| | | | | | l/min | | 37,5 | 50 | 58,3 | 66,6 | 75 | 83,3 | 100 | 120 |
| | A | kW | HP | kW | H (m) = Total head | | | | | | | | | |
| MXPM 402 | 3 | 0,37 | 0,5 | 0,57 | | 22 | 19 | 17,5 | 16,5 | 15 | 14 | 12,5 | 9,5 | 5 |
| MXPM 403/A | 4,5 | 0,55 | 0,75 | 0,78 | | 33,5 | 30 | 28 | 26,5 | 25 | 23 | 21,5 | 17 | 10 |
| MXPM 404/A | 5,7 | 0,75 | 1 | 1,01 | | 46 | 40 | 38 | 36,5 | 34 | 32 | 29,5 | 24 | 16 |
| MXPM 405 | 7 | 1,1 | 1,5 | 1,44 | | 56 | 50 | 47 | 45 | 42 | 39,5 | 36 | 29,5 | 20 |
| MXPM 406 | 7,4 | 1,1 | 1,5 | 1,44 | | 65,9 | 58,5 | 54,6 | 51,5 | 48,2 | 44,6 | 40,7 | 32,4 | 21,4 |

**P1:** Maximum power input.
**P2:** Rated motor power output.
Tolerances according to UNI EN ISO 9906:2012

A safety margin of + 0.5 m is recommended for the NPSH value.
For flow rates greater than 4 m³/h use a G1 1/4 suction pipe (DN 32).
**Test results with clean cold water, without gas content.**

## Dimensions and weights

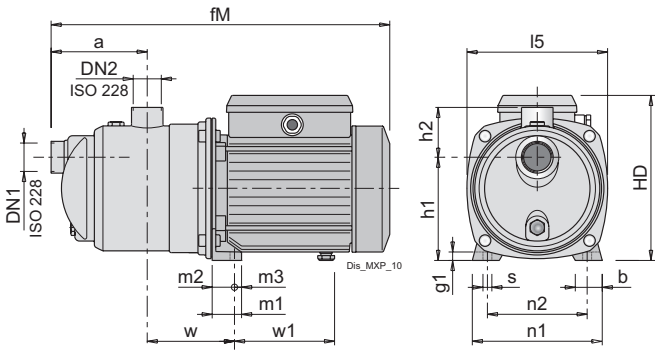


| TYPE | | | mm | | | | | | | | | | | | | | | | kg |
|---|---|---|---|---|---|---|---|---|---|---|---|---|---|---|---|---|---|---|---|
| | DN1 | DN2 | a | b | fM | g1 | h1 | h2 | HD | l5 | m1 | m2 | m3 | n1 | n2 | s | w | w1 | Weight |
| MXP 202 | G 1 | G 1 | 115 | 30 | 362 | 10 | 116 | 61 | 176 | 161 | 33 | 25 | 8 | 146 | 112 | 9 | 95 | 102 | 5.9 |
| MXP 203 | G 1 | G 1 | 115 | 30 | 362 | 10 | 116 | 61 | 176 | 161 | 33 | 25 | 8 | 146 | 112 | 9 | 95 | 102 | 6.7 |
| MXP 204/A | G 1 | G 1 | 115 | 30 | 391 | 10 | 116 | 61 | 192 | 161 | 33 | 25 | 8 | 146 | 112 | 9 | 95 | 112 | 8.9 |
| MXP 205/A | G 1 | G 1 | 115 | 30 | 391 | 10 | 116 | 61 | 192 | 161 | 33 | 25 | 8 | 146 | 112 | 9 | 95 | 112 | 10.9 |
| MXP 206 | G 1¼ | G 1 | 140 | 33 | 462 | 11 | 152 | 68 | 225 | 213.5 | 37.5 | 28 | 9.5 | 185 | 155 | 9.5 | 113 | 147 | 13.3 |
| MXP 402 | G 1 | G 1 | 115 | 30 | 362 | 10 | 116 | 61 | 176 | 161 | 33 | 25 | 8 | 146 | 112 | 9 | 95 | 102 | 6.7 |
| MXP 403/A | G 1 | G 1 | 115 | 30 | 391 | 10 | 116 | 61 | 192 | 161 | 33 | 25 | 8 | 146 | 112 | 9 | 95 | 112 | 8.8 |
| MXP 404/B | G 1 | G 1 | 115 | 30 | 391 | 10 | 116 | 61 | 192 | 161 | 33 | 25 | 8 | 146 | 112 | 9 | 95 | 112 | 10.8 |
| MXP 405 | G 1 | G 1 | 115 | 30 | 421 | 10 | 116 | 61 | 192 | 161 | 33 | 25 | 8 | 146 | 112 | 9 | 95 | 142 | 12.8 |
| MXP 406 | G 1¼ | G 1 | 140 | 33 | 488.5 | 11 | 152 | 68 | 240 | 213.5 | 375 | 28 | 9.5 | 185 | 155 | 9.5 | 113 | 157.5 | 15.7 |

| TYPE | | | mm | | | | | | | | | | | | | | | | kg |
|---|---|---|---|---|---|---|---|---|---|---|---|---|---|---|---|---|---|---|---|
| | DN1 | DN2 | a | b | fM | g1 | h1 | h2 | HD | l5 | m1 | m2 | m3 | n1 | n2 | s | w | w1 | Weight |
| MXPM 202 | G 1 | G 1 | 115 | 30 | 362 | 10 | 116 | 61 | 176 | 161 | 33 | 25 | 8 | 146 | 112 | 9 | 95 | 102 | 6 |
| MXPM 203 | G 1 | G 1 | 115 | 30 | 362 | 10 | 116 | 61 | 176 | 161 | 33 | 25 | 8 | 146 | 112 | 9 | 95 | 102 | 6.6 |
| MXPM 204/A | G 1 | G 1 | 115 | 30 | 391 | 10 | 116 | 61 | 192 | 161 | 33 | 25 | 8 | 146 | 112 | 9 | 95 | 112 | 9.9 |
| MXPM 205 | G 1 | G 1 | 115 | 30 | 391 | 10 | 116 | 61 | 192 | 161 | 33 | 25 | 8 | 146 | 112 | 9 | 95 | 112 | 11.1 |
| MXPM 206 | G 1¼ | G 1 | 140 | 33 | 462 | 11 | 152 | 68 | 225 | 213.5 | 37.5 | 28 | 9.5 | 185 | 155 | 9.5 | 113 | 147 | 12.8 |
| MXPM 402 | G 1 | G 1 | 115 | 30 | 362 | 10 | 116 | 61 | 176 | 161 | 33 | 25 | 8 | 146 | 112 | 9 | 95 | 102 | 6.6 |
| MXPM 403/A | G 1 | G 1 | 115 | 30 | 391 | 10 | 116 | 61 | 192 | 161 | 33 | 25 | 8 | 146 | 112 | 9 | 95 | 112 | 9.8 |
| MXPM 404/A | G 1 | G 1 | 115 | 30 | 391 | 10 | 116 | 61 | 192 | 161 | 33 | 25 | 8 | 146 | 112 | 9 | 95 | 112 | 10 |
| MXPM 405 | G 1 | G 1 | 115 | 30 | 421 | 10 | 116 | 61 | 192 | 161 | 33 | 25 | 8 | 146 | 112 | 9 | 95 | 142 | 12.8 |
| MXPM 406 | G 1¼ | G 1 | 140 | 33 | 488.5 | 11 | 152 | 68 | 240 | 213.5 | 375 | 28 | 9.5 | 185 | 155 | 9.5 | 113 | 157.5 | 17.1 |

# MGP

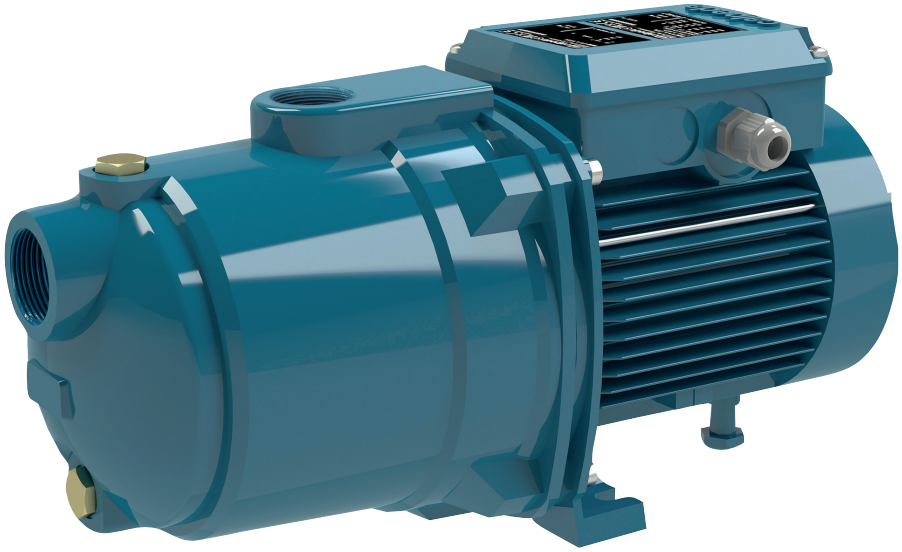

**Performance n ≈ 2800 rpm**

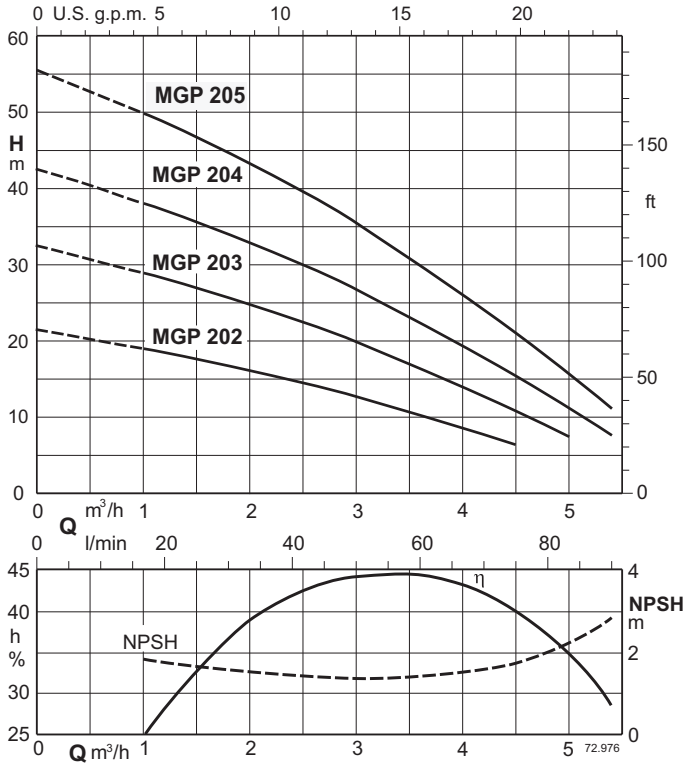


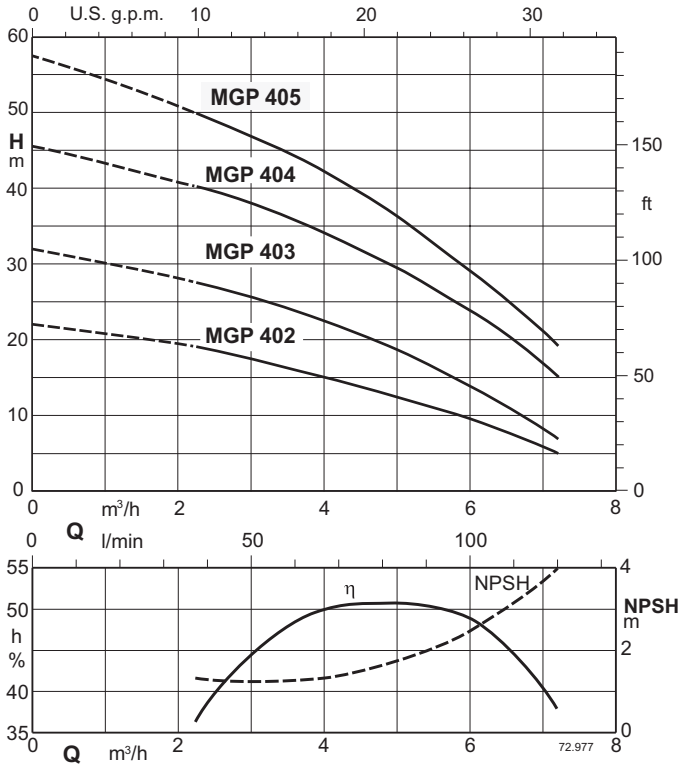


# Horizontal multi-stage close coupled pumps

# MGP

calpeda®

## Construction

Horizontal Multi-Stage Close Coupled Pumps
Single-piece barrel casing in cast iron, with front suction port above pumps axis and radial delivery at top.
Stages in Noryl.

## Applications

For water supply systems.
For domestic use, for garden use and irrigation.

## Operating conditions

Liquid temperature: 0 °C to +50 °C.
Ambient temperature up to 40° C.
Maximum permissible pressure in the pump casing: 8 bar.
Continuous duty.

## Motor

2-pole induction motor, 50 Hz (n ≈ 2800 1/min).
**MGP:** three-phase 230/400 V ± 10%.
**MGPM:** single-phase single-phase 230 V ± 10%, with thermal protector.
Capacitor inside the terminal box.
Insulation class F.
Protection IP 54.
Motor set up for operation with 1.1 kW inverter.
**IE2 efficiency class for single-phase motors.**
**IE3 efficiency class for three-phase motors (IE2 up to 0,65 kW).**
Constructed in accordance with EN 60034-1; EN 60034-30-1.
EN 60335-1, EN 60335-2-41.

## Special features on request

Other voltages.
Frequency 60 Hz (as per 60 Hz data sheet).
Motor suitable for operation with frequency converter up to 0,75 kW.

## Designation

Example: MGP 206/B
MGP = Series
2 = Rated flaw in m3/h
06 = Number of impellers
/B = It refers to a revision

## Materials

| Components | Material |
|---|---|
| Pump casing | Cast iron GJL 200 EN 1561 |
| Casing cover | Chrome-nickel steel 1.4301 EN 10088 (AISI 304) |
| Shaft | Steel 1.4104 EN 10088 (AISI 430F) |
| Stage casing | PPO-GF20 (Noryl) |
| Impeller | PPO-GF20 (Noryl) |
| Mechanical seal | Carbon - Ceramic - NBR |

## Performance n ≈ 2800 rpm

### Three-phase

| | | | | | Q = Flow | | | | | | | | | | | |
|---|---|---|---|---|---|---|---|---|---|---|---|---|---|---|---|---|
| | | | | | m³/h | 0 | 1 | 1,5 | 2 | 2,5 | 3 | 3,5 | 4 | 4,5 | 5 | 5,4 |
| Model | 230V | 400V | P2 | | l/min | | 16,6 | 25 | 33,3 | 41,6 | 50 | 58,3 | 66,6 | 75 | 83,3 | 90 |
| | A | | kW | HP | H (m) = Total head | | | | | | | | | | | |
| MGP 202 | 1,7 | 1 | 0,25 | 0,34 | | 21,5 | 19 | 17,5 | 16 | 14,5 | 12,5 | 10,5 | 8,5 | 6,5 | - | - |
| MGP 203 | 2,4 | 1,4 | 0,37 | 0,5 | | 32,5 | 29 | 27 | 25 | 22,5 | 20 | 17 | 14 | 11 | 7,5 | - |
| MGP 204 | 2,8 | 1,6 | 0,45 | 0,6 | | 43 | 38 | 35,5 | 32,7 | 29,7 | 26,5 | 23 | 19,2 | 15,2 | 11 | 7,5 |
| MGP 205/A | 3,5 | 2 | 0,75 | 1 | | 56 | 50 | 46,5 | 43,5 | 40 | 35,5 | 31 | 26,5 | 21 | 16 | 11 |

### Single-phase

| | | | | | Q = Flow | | | | | | | | | | | |
|---|---|---|---|---|---|---|---|---|---|---|---|---|---|---|---|---|
| | | | | | m³/h | 0 | 1 | 1,5 | 2 | 2,5 | 3 | 3,5 | 4 | 4,5 | 5 | 5,4 |
| Model | 230V | P2 | | P1 | l/min | | 16,6 | 25 | 33,3 | 41,6 | 50 | 58,3 | 66,6 | 75 | 83,3 | 90 |
| | A | kW | HP | kW | H (m) = Total head | | | | | | | | | | | |
| MGPM 202 | 2,3 | 0,25 | 0,34 | 0,42 | | 21,5 | 19 | 17,5 | 16 | 14,5 | 12,5 | 10,5 | 8,5 | 6,5 | - | - |
| MGPM 203 | 3 | 0,37 | 0,5 | 0,57 | | 32,5 | 29 | 27 | 25 | 22,5 | 20 | 17 | 14 | 11 | 7,5 | - |
| MGPM 204 | 3,5 | 0,45 | 0,6 | 0,67 | | 43 | 38 | 35,5 | 32,7 | 29,7 | 26,5 | 23 | 19,2 | 15,2 | 11 | 7,5 |
| MGPM 205 | 5,7 | 0,75 | 1 | 1,01 | | 56 | 50 | 46,5 | 43,5 | 40 | 35,5 | 31 | 26,5 | 21 | 16 | 11 |

# MGP

calpeda®

## Three-phase

| Model | 230V | 400V | P2 | | Q = Flow | | | | | | | | | |
|---|---|---|---|---|---|---|---|---|---|---|---|---|---|---|
| | | | | | m³/h | 0 | 2,25 | 3 | 3,5 | 4 | 4,5 | 5 | 6 | 7,2 |
| | | | | | l/min | | 37,5 | 50 | 58,3 | 66,6 | 75 | 83,3 | 100 | 120 |
| | A | | kW | HP | H (m) = Total head | | | | | | | | | |
| MGP 402 | 2,4 | 1,4 | 0,37 | 0,5 | | 22 | 19 | 17,5 | 16,5 | 15 | 14 | 12,5 | 9,5 | 5 |
| MGP 403/A | 2,8 | 1,6 | 0,55 | 0,75 | | 32 | 27,5 | 25,5 | 23,7 | 22 | 20 | 18 | 13,3 | 7 |
| MGP 404/A | 3,5 | 2 | 0,75 | 1 | | 46 | 40 | 38 | 36,5 | 34 | 32 | 29,5 | 24 | 15 |
| MGP 405 | 4,5 | 2,6 | 1,1 | 1,5 | | 56 | 50 | 47 | 45 | 42,5 | 39,5 | 36 | 29 | 19 |

## Single-phase

| Model | 230V | P2 | | P1 | Q = Flow | | | | | | | | | |
|---|---|---|---|---|---|---|---|---|---|---|---|---|---|---|
| | | | | | m³/h | 0 | 2,25 | 3 | 3,5 | 4 | 4,5 | 5 | 6 | 7,2 |
| | | | | | l/min | | 37,5 | 50 | 58,3 | 66,6 | 75 | 83,3 | 100 | 120 |
| | A | kW | HP | kW | H (m) = Total head | | | | | | | | | |
| MGPM 402 | 3 | 0,37 | 0,5 | 0,57 | | 22 | 19 | 17,5 | 16,5 | 15 | 14 | 12,5 | 9,5 | 5 |
| MGPM 403/A | 4,5 | 0,55 | 0,75 | 0,78 | | 32 | 27,5 | 25,5 | 23,7 | 22 | 20 | 18 | 13,3 | 7 |
| MGPM 404 | 5,7 | 0,75 | 1 | 1,01 | | 46 | 40 | 38 | 36,5 | 34 | 32 | 29,5 | 24 | 15 |
| MGPM 405 | 7 | 1,1 | 1,5 | 1,44 | | 56 | 50 | 47 | 45 | 42,5 | 39,5 | 36 | 29 | 19 |

**P1:** Maximum power input.
**P2:** Rated motor power output.
Tolerances according to UNI EN ISO 9906:2012

**Test results with clean cold water, without gas content.**
A safety margin of + 0.5 m is recommended for the NPSH value.
For flow rates greater than 4 m³/h use a G1 1/4 suction pipe (DN 32).

## Dimensions and weights

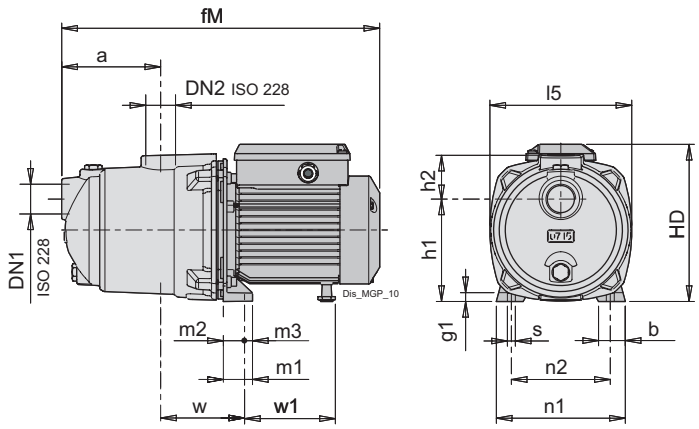


| TYPE | | | mm | | | | | | | | | | | | | | | | kg |
|---|---|---|---|---|---|---|---|---|---|---|---|---|---|---|---|---|---|---|---|
| | DN1 | DN2 | a | b | fM | g1 | h1 | h2 | HD | l5 | m1 | m2 | m3 | n1 | n2 | s | w | w1 | Weight |
| MGP 202 | G 1 | G 1 | 115 | 30 | 362 | 10 | 116 | 51 | 176 | 161 | 33 | 25 | 8 | 146 | 112 | 9 | 95 | 102 | 8.8 |
| MGP 203 | G 1 | G 1 | 115 | 30 | 362 | 10 | 116 | 51 | 176 | 161 | 33 | 25 | 8 | 146 | 112 | 9 | 95 | 102 | 9.5 |
| MGP 204 | G 1 | G 1 | 115 | 30 | 362 | 10 | 116 | 51 | 176 | 161 | 33 | 25 | 8 | 146 | 112 | 9 | 95 | 102 | 10.3 |
| MGP 205/A | G 1 | G 1 | 115 | 30 | 391 | 10 | 116 | 51 | 192 | 161 | 33 | 25 | 8 | 146 | 112 | 9 | 95 | 112 | 13.6 |
| MGP 402 | G 1 | G 1 | 115 | 30 | 362 | 10 | 116 | 51 | 176 | 161 | 33 | 25 | 8 | 146 | 112 | 9 | 95 | 102 | 9.4 |
| MGP 403/A | G 1 | G 1 | 115 | 30 | 391 | 10 | 116 | 51 | 192 | 161 | 33 | 25 | 8 | 146 | 112 | 9 | 95 | 112 | 11.7 |
| MGP 404/A | G 1 | G 1 | 115 | 30 | 391 | 10 | 116 | 51 | 192 | 161 | 33 | 25 | 8 | 146 | 112 | 9 | 95 | 112 | 13.6 |
| MGP 405 | G 1 | G 1 | 115 | 30 | 421 | 10 | 116 | 51 | 192 | 161 | 33 | 25 | 8 | 146 | 112 | 9 | 95 | 112 | 15.7 |

| TYPE | | | mm | | | | | | | | | | | | | | | | kg |
|---|---|---|---|---|---|---|---|---|---|---|---|---|---|---|---|---|---|---|---|
| | DN1 | DN2 | a | b | fM | g1 | h1 | h2 | HD | l5 | m1 | m2 | m3 | n1 | n2 | s | w | w1 | Weight |
| MGPM 202 | G 1 | G 1 | 115 | 30 | 362 | 10 | 116 | 51 | 176 | 161 | 33 | 25 | 8 | 146 | 112 | 9 | 95 | 102 | 8.9 |
| MGPM 203 | G 1 | G 1 | 115 | 30 | 362 | 10 | 116 | 51 | 176 | 161 | 33 | 25 | 8 | 146 | 112 | 9 | 95 | 102 | 10.1 |
| MGPM 204 | G 1 | G 1 | 115 | 30 | 362 | 10 | 116 | 51 | 176 | 161 | 33 | 25 | 8 | 146 | 112 | 9 | 95 | 102 | 10.4 |
| MGPM 205 | G 1 | G 1 | 115 | 30 | 391 | 10 | 116 | 51 | 192 | 161 | 33 | 25 | 8 | 146 | 112 | 9 | 95 | 112 | 13.6 |
| MGPM 402 | G 1 | G 1 | 115 | 30 | 362 | 10 | 116 | 51 | 176 | 161 | 33 | 25 | 8 | 146 | 112 | 9 | 95 | 102 | 9.4 |
| MGPM 403/A | G 1 | G 1 | 115 | 30 | 362 | 10 | 116 | 51 | 176 | 161 | 33 | 25 | 8 | 146 | 112 | 9 | 95 | 102 | 12.6 |
| MGPM 404 | G 1 | G 1 | 115 | 30 | 391 | 10 | 116 | 51 | 192 | 161 | 33 | 25 | 8 | 146 | 112 | 9 | 95 | 112 | 13.6 |
| MGPM 405 | G 1 | G 1 | 115 | 30 | 421 | 10 | 116 | 51 | 192 | 161 | 33 | 25 | 8 | 146 | 112 | 9 | 95 | 112 | 15.8 |

# MPSU

**Coverage chart n ≈ 2900 rpm**

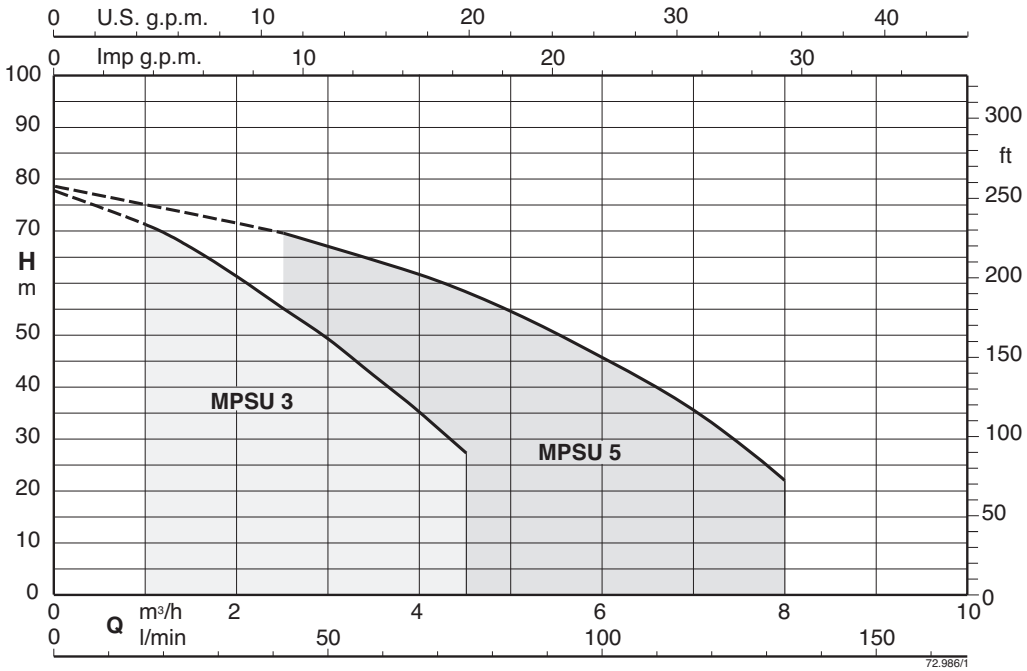


# Vertical multi-stage close coupled pumps

# MPSU

## Construction

5” Vertical multi-stage close coupled submersible or surface pumps.
External jacket made of steel 1.4301 EN 10088 (AISI 304) and Noryl stages.
*MPSUM:* with built-in capacitor, accessible through the delivery casing.
Suction connection on the lower casing and delivery connection on the top casing.
The motor is cooled by the pumped water, which flows between the motor jacket and the outer jacket.
Double mechanical shaft seal with interposed oil chamber.

## Applications

For clean water without abrasives or additives aggressive for the materials of the pump.
For domestic, civil and industrial applications.
For installation in confined spaces without ventilation.
In environments where there is a risk of flooding, the pump can be fully submerged.
For plants subjected to water jets.
When low-noise operation is required.

## Operating conditions

Water temperature up to 35 °C.
Maximum permissible pressure in the pump casing: 8 bar.
Continuous duty.

## Motor

2-pole induction motor, 50 Hz (n ≈ 2900 rpm).
**MPSU:** three-phase
230 V ± 10%.
400 V ± 10%.
Cable: H07RN8-F, 5 m without plug.
**MPSUM:** single-phase
single-phase 230 V ± 10%, with thermal protector.
Incorporated capacitor.
Float switch MPSUM.. CG (on demand)
Cable: H07RN8-F, 5 m with CEI-UNEL 47166 plug.
Insulation class F.
Protection IP X8 (for continuous immersion).
Triple impregnation humidity-proof dry winding
Constructed in accordance with
EN 60034-1.
EN 60335-1, EN 60335-2-41.

## Special features on request

Other voltages.
Frequency 60 Hz (as per 60 Hz data sheet).
Cable length 15 m.
Motor suitable for operation with frequency converter.

## Designation

Example MPSU 306
MPSU = Series
3 = Rated flow in m3/h
06 = Number of impellers

## Materials

| Components | Material |
|---|---|
| delivery casing | Chrome-nickel steel 1.4301 EN 10088 (AISI 304) |
| External jacket | Chrome-nickel steel 1.4301 EN 10088 (AISI 304) |
| Base | Chrome-nickel steel 1.4301 EN 10088 (AISI 304) |
| motor jacket | Chrome-nickel steel 1.4301 EN 10088 (AISI 304) |
| Stage casing | PPO-GF20 (Noryl) |
| Impeller | PPO-GF20 (Noryl) |
| Shaft | Chrome-nickel steel 1.4301 EN 10088 (AISI 304) |
| Capacitor cover | PPS Polymer (Grivory) |
| Oil chamber cover | PPS Polymer (Grivory) |
| Support ring preload | PPS Polymer (Grivory) |
| Preload ring stages | PPS Polymer (Grivory) |
| Mechanical seal: Upper | Steatite, carbon, NBR |
| Mechanical seal: Lower | Carbon, silicon carbide, NBR |
| Seal lubrication oil | Oil for food/pharmaceutical machinery |

# MPSU

## Coverage chart n ≈ 2900 rpm

### Three-phase

| | | | | Q = Flow | | | | | | | | | |
|---|---|---|---|---|---|---|---|---|---|---|---|---|---|
| | | | | m³/h | 0 | 1 | 1,5 | 2 | 2,5 | 3 | 3,5 | 4 | 4,5 |
| Model | 400V | P2 | | l/min | | 16,66 | 25 | 33,33 | 41,66 | 50 | 58,33 | 66,66 | 75 |
| | A | kW | HP | H (m) = Total head | | | | | | | | | |
| MPSU 304 | 1,6 | 0,55 | 0,75 | | 44 | 41,5 | 39,5 | 36,5 | 33,5 | 29,5 | 25,5 | 21 | 16 |
| MPSU 305 | 1,9 | 0,75 | 1 | | 54 | 49,5 | 46,2 | 43 | 30,9 | 35 | 30 | 25 | 19 |
| MPSU 306 | 2,2 | 0,9 | 1,2 | | 66,5 | 60,5 | 57 | 53 | 48,5 | 43,5 | 38 | 32 | 26 |
| MPSU 307 | 2,6 | 0,9 | 1,2 | | 75 | 67,5 | 63 | 58 | 53 | 47 | 41 | 34,5 | 27 |

### Single-phase

| | | | | | Q = Flow | | | | | | | | | |
|---|---|---|---|---|---|---|---|---|---|---|---|---|---|---|
| | | | | | m³/h | 0 | 1 | 1,5 | 2 | 2,5 | 3 | 3,5 | 4 | 4,5 |
| Model | 230V | P2 | | P1 | l/min | | 16,6 | 25 | 33,3 | 41,6 | 50 | 58,3 | 66,6 | 75 |
| | A | kW | HP | kW | H (m) = Total head | | | | | | | | | |
| MPSUM 304 | 4,1 | 0,55 | 0,75 | 0,9 | | 44 | 41,5 | 39,5 | 36,5 | 33,5 | 29,5 | 25,5 | 21 | 16 |
| MPSUM 305 | 5 | 0,75 | 1 | 1,1 | | 54 | 49,5 | 46,2 | 43 | 30,9 | 35 | 30 | 25 | 19 |
| MPSUM 306 | 6 | 0,9 | 1,2 | 1,3 | | 66,5 | 60,5 | 57 | 53 | 48,5 | 43,5 | 38 | 32 | 26 |
| MPSUM 307 | 6,6 | 0,9 | 1,2 | 1,5 | | 75 | 67,5 | 63 | 58 | 53 | 47 | 41 | 34,5 | 27 |

### Three-phase

| | | | | Q = Flow | | | | | | | | | | |
|---|---|---|---|---|---|---|---|---|---|---|---|---|---|---|
| | | | | m³/h | 0 | 2,5 | 3 | 3,5 | 4 | 4,5 | 5 | 6 | 7 | 8 |
| Model | 400V | P2 | | l/min | | 41,66 | 50 | 58,33 | 66,66 | 75 | 83,33 | 100 | 116 | 133 |
| | A | kW | HP | H (m) = Total head | | | | | | | | | | |
| MPSU 504 | 2,2 | 0,9 | 1,2 | | 45 | 39,5 | 37,8 | 35,8 | 33,5 | 31 | 28,5 | 23 | 16,5 | 9,5 |
| MPSU 505 | 2,6 | 1,1 | 1,5 | | 53 | 47,5 | 45,5 | 43,5 | 41 | 38,5 | 35,5 | 29,5 | 22 | 13,5 |
| MPSU 506 | 2,8 | 1,1 | 1,5 | | 66,5 | 58 | 55,6 | 53 | 50 | 46,3 | 42,5 | 34 | 24,5 | 14 |
| MPSU 507 | 4 | 1,5 | 2 | | 78,5 | 69,5 | 66,5 | 64 | 61,5 | 58 | 54,5 | 45,5 | 36 | 22 |

### Single-phase

| | | | | | Q = Flow | | | | | | | | | | |
|---|---|---|---|---|---|---|---|---|---|---|---|---|---|---|---|
| | | | | | m³/h | 0 | 2,5 | 3 | 3,5 | 4 | 4,5 | 5 | 6 | 7 | 8 |
| Model | 230V | P2 | | P1 | l/min | | 41,6 | 50 | 58,3 | 66,6 | 75 | 83,3 | 100 | 117 | 133 |
| | A | kW | HP | kW | H (m) = Total head | | | | | | | | | | |
| MPSUM 504 | 6 | 0,9 | 1,2 | 1,2 | | 45 | 39,5 | 37,8 | 35,8 | 33,5 | 31 | 28,5 | 23 | 16,5 | 9,5 |
| MPSUM 505 | 7 | 1,1 | 1,5 | 1,5 | | 53 | 47,5 | 45,5 | 43,5 | 41 | 38,5 | 35,5 | 29,5 | 22 | 13,5 |
| MPSUM 506 | 8,3 | 1,1 | 1,5 | 1,7 | | 66,5 | 58 | 55,6 | 53 | 50 | 46,3 | 42,5 | 34 | 24,5 | 14 |
| MPSUM 507 | 12 | 1,5 | 2 | 2,2 | | 78,5 | 69,5 | 66,5 | 64 | 61,5 | 58 | 54,5 | 45,5 | 36 | 22 |

**P1:** Maximum power input.
**P2:** Rated motor power output.
Tolerances according to UNI EN ISO 9906:2012
**Test results with clean cold water, without gas content.**

# MPSU

## Dimensions and weights

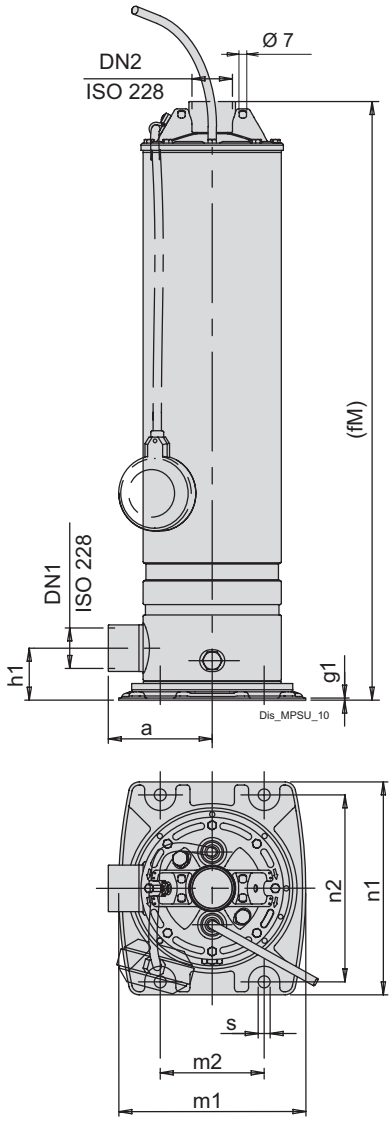


**weights** with cable length: 5 m

| Pump | Cable H07RN8-F, | | |
|---|---|---|---|
| | 230V | 230V | 400V |
| | 1 ~ | 3 ~ | 3 ~ |
| MPSU 304 - MPSUM 304 | 3G1 mm2 | 4G1 mm2 | 4G1 mm2 |
| MPSU 305 - MPSUM 305 | 3G1 mm2 | 4G1 mm2 | 4G1 mm2 |
| MPSU 306 - MPSUM 306 | 3G1 mm2 | 4G1 mm2 | 4G1 mm2 |
| MPSU 307 - MPSUM 307 | 3G1 mm2 | 4G1 mm2 | 4G1 mm2 |
| MPSU 504 - MPSUM 504 | 3G1 mm2 | 4G1 mm2 | 4G1 mm2 |
| MPSU 505 - MPSUM 505 | 3G1 mm2 | 4G1 mm2 | 4G1 mm2 |
| MPSU 506 - MPSUM 506 | 3G1,5 mm2 | 4G1 mm2 | 4G1 mm2 |
| MPSU 507 - MPSUM 507 | 3G2,5 mm2 | 4G1 mm2 | 4G1 mm2 |

**MPSUM ... CG:** With float switch pump (on demand)

| TYPE | ISO 228 | | mm | | | | | | | | | Kg |
|---|---|---|---|---|---|---|---|---|---|---|---|---|
| | DN1 | DN2 | a | fM | g1 | h1 | m1 | m2 | n1 | n2 | s1 | Weight |
| **MPSU 304** | G 1 1/4 | G 1 1/4 | 100 | 553 | 2 | 50 | 180 | 100 | 205 | 180 | 11.5 | 11.4 |
| **MPSU 305** | G 1 1/4 | G 1 1/4 | 100 | 602 | 2 | 50 | 180 | 100 | 205 | 180 | 11.5 | 11.9 |
| **MPSU 306** | G 1 1/4 | G 1 1/4 | 100 | 626 | 2 | 50 | 180 | 100 | 205 | 180 | 11.5 | 13 |
| **MPSU 307** | G 1 1/4 | G 1 1/4 | 100 | 650 | 2 | 50 | 180 | 100 | 205 | 180 | 11.5 | 13.2 |
| **MPSU 504** | G 1 1/4 | G 1 1/4 | 100 | 578 | 2 | 50 | 180 | 100 | 205 | 180 | 11.5 | 12.1 |
| **MPSU 505** | G 1 1/4 | G 1 1/4 | 100 | 602 | 2 | 50 | 180 | 100 | 205 | 180 | 11.5 | 12.8 |
| **MPSU 506** | G 1 1/4 | G 1 1/4 | 100 | 671 | 2 | 50 | 180 | 100 | 205 | 180 | 11.5 | 15 |
| **MPSU 507** | G 1 1/4 | G 1 1/4 | 100 | 720 | 2 | 50 | 180 | 100 | 205 | 180 | 11.5 | 16.8 |

| TYPE | ISO 228 | | mm | | | | | | | | | Kg |
|---|---|---|---|---|---|---|---|---|---|---|---|---|
| | DN1 | DN2 | a | fM | g1 | h1 | m1 | m2 | n1 | n2 | s1 | Weight |
| **MPSUM 304** | G 1 1/4 | G 1 1/4 | 100 | 553 | 2 | 50 | 180 | 100 | 205 | 180 | 11.5 | 12.4 |
| **MPSUM 305** | G 1 1/4 | G 1 1/4 | 100 | 602 | 2 | 50 | 180 | 100 | 205 | 180 | 11.5 | 13.8 |
| **MPSUM 306** | G 1 1/4 | G 1 1/4 | 100 | 626 | 2 | 50 | 180 | 100 | 205 | 180 | 11.5 | 15.8 |
| **MPSUM 307** | G 1 1/4 | G 1 1/4 | 100 | 650 | 2 | 50 | 180 | 100 | 205 | 180 | 11.5 | 15 |
| **MPSUM 504** | G 1 1/4 | G 1 1/4 | 100 | 578 | 2 | 50 | 180 | 100 | 205 | 180 | 11.5 | 14.2 |
| **MPSUM 505** | G 1 1/4 | G 1 1/4 | 100 | 602 | 2 | 50 | 180 | 100 | 205 | 180 | 11.5 | 14.4 |
| **MPSUM 506** | G 1 1/4 | G 1 1/4 | 100 | 671 | 2 | 50 | 180 | 100 | 205 | 180 | 11.5 | 16.6 |
| **MPSUM 507** | G 1 1/4 | G 1 1/4 | 100 | 720 | 2 | 50 | 180 | 100 | 205 | 180 | 11.5 | 19.4 |

# MPSU

## Characteristic curves n ≈ 2900 rpm

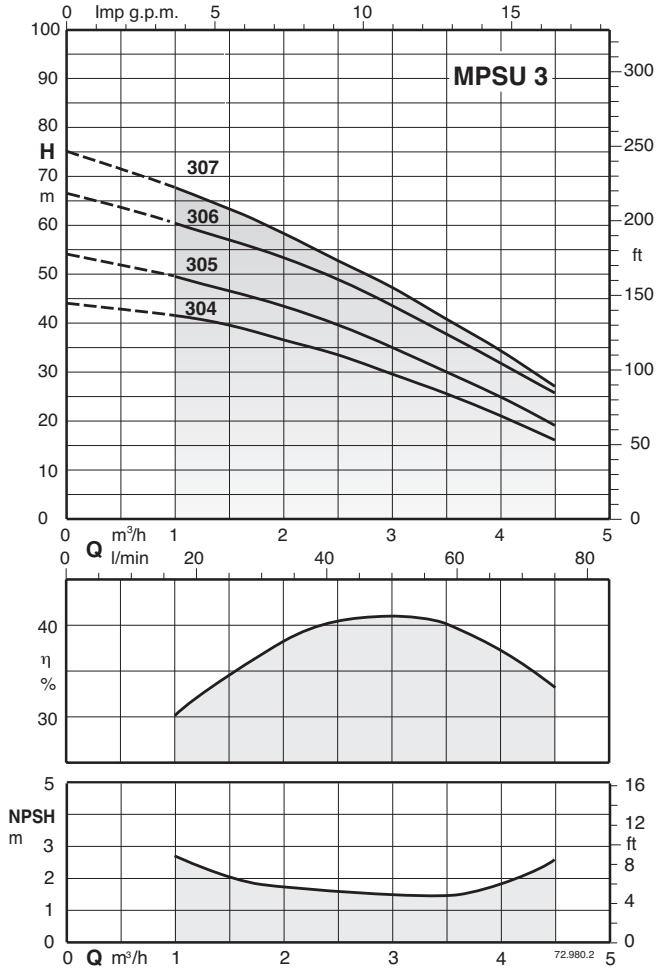


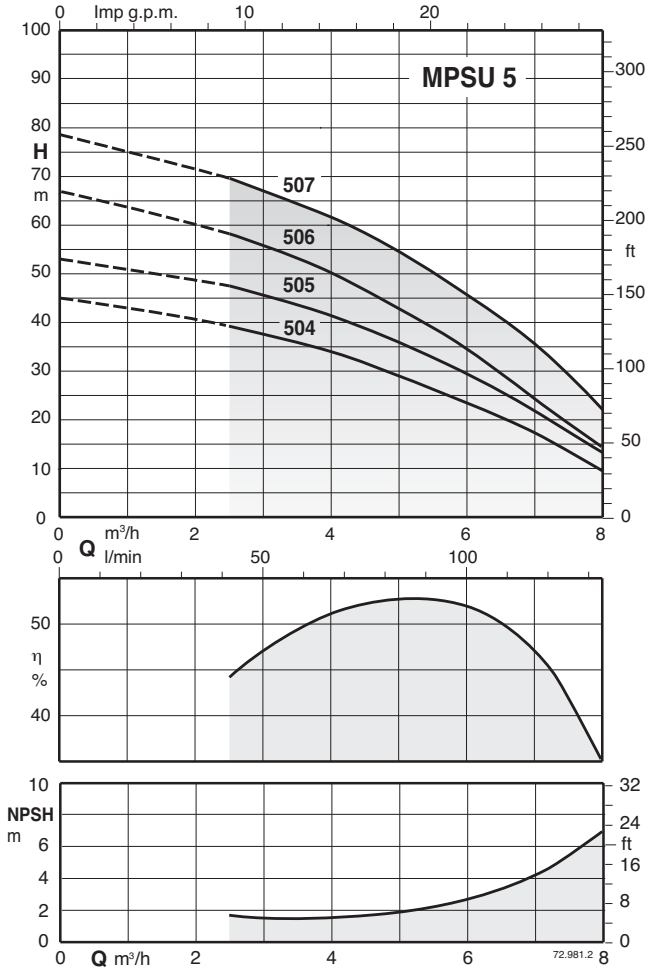


## Examples of installations

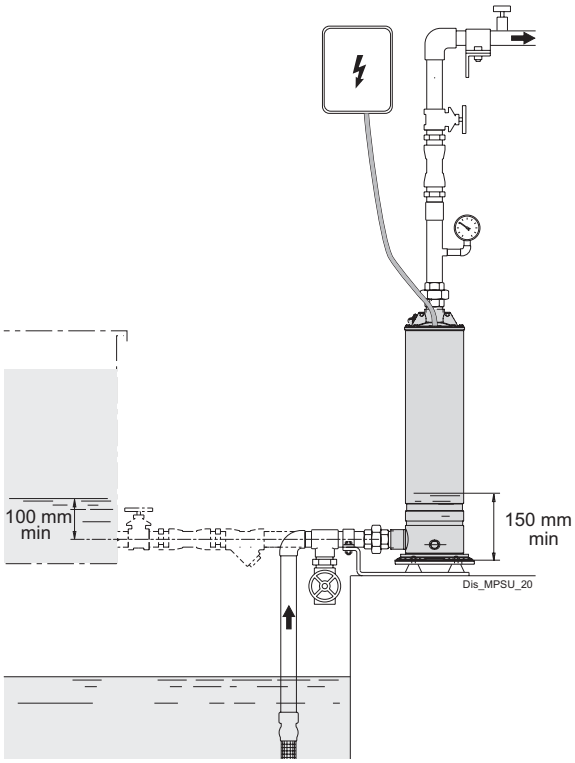


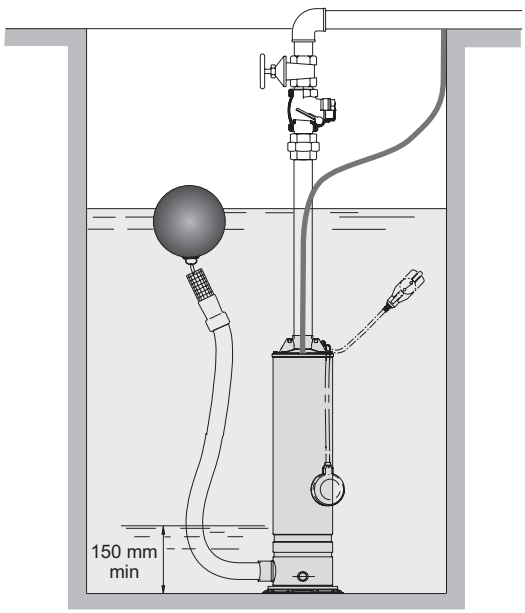

# MXV-B

**Coverage chart n ≈ 2900 rpm**

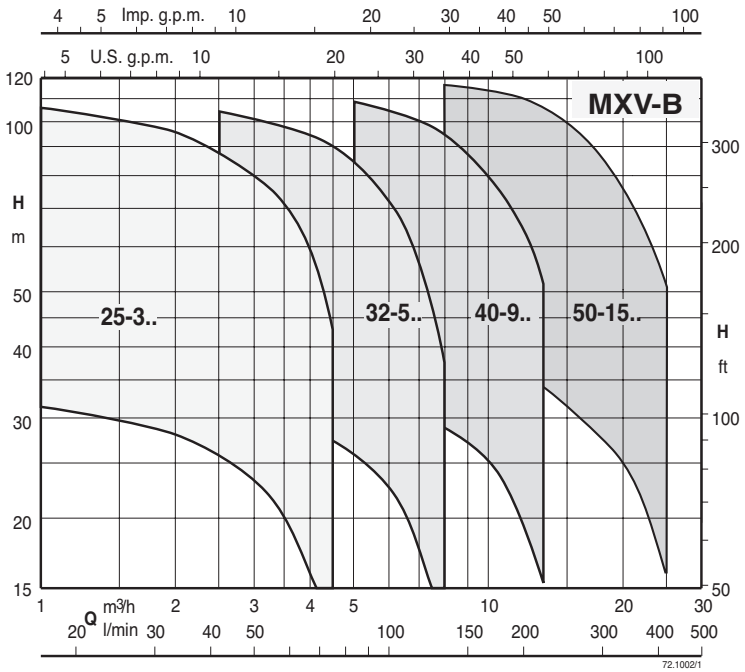


# Vertical multi-stage close coupled stainless steel pumps

# MXV-B

## Construction

Vertical multi-stage close coupled pumps with suction and delivery connections of the same diameter and arranged along the same axis (in-line).
All parts that come into contact with the liquid, are in chrome-nickel stainless steel.
Corrosion-resistant bearing sleeves lubricated by the pumped liquid.
**Version with frequency converter (on request)**

## Applications

For water supply systems.
For clean non-explosive liquids, without solid, filamentary or abrasive matter and non-aggressive for stainless steel (with adaptation of sealing materials on request).
A universal pump for civil and industrial use, for pressure boosting systems, high-pressure washing plants, irrigation, agricultural uses and sport installations.

## Operating conditions

Temperature of liquid: from -15 °C to +90 °C.
Ambient temperature up to 40° C.
Maximum permissible pressure in pump casing: 16 bar.
Continuous duty (S3 60% for single-phase pump to 1,5 kW).

## Motor

2-pole induction motor, 50 Hz (n ≈ 2900 rpm).
**MXV-B:** three-phase 230/400 V ± 10% up to 3 kW;
400/690 V ± 10% from 3,7 to 7,5 kW.
**MXV-BM:** single-phase single-phase 230 V ± 10%, with thermal protector.
Insulation class F.
Protection IP 54.
Three-phase motor suitable for operation with frequency converter.
**IE2 efficiency class for single-phase motors up to 1,1 kW.**
**IE3 efficiency class for three-phase motors.**
Constructed in accordance with EN 60034-1, EN 60034-30-1.
EN 60335-1, EN 60335-2-41.

## Special features on request

Other voltages.
Frequency 60 Hz (as per 60 Hz data sheet).
IP protection: IP55
Special mechanical seal
Pump casing seal rings in FPM.
Higher or lower liquid or ambient temperatures.

## Designation

Example MXV-BM EI 25-305 O
MXV-B = Series
M = Single-phase motor (up to 1.5 kW)
EI = With frequency converter I-MAT
25 = DN ports in mm
3 = Rated capacity in m3/h
05 = Number of stages
O = Oval flanges

**The electropumps comply with the European Regulation no. 547/2012.**

## Materials

| Components | Material |
|---|---|
| External jacket | Chrome-nickel steel 1.4301 EN 10088 (AISI 304) |
| Suction casing | Chrome-nickel steel 1.4301 EN 10088 (AISI 304) |
| Delivery casing | Chrome-nickel steel 1.4301 EN 10088 (AISI 304) |
| Stage casing | Chrome-nickel steel 1.4301 EN 10088 (AISI 304) |
| Impeller | Chrome-nickel steel 1.4301 EN 10088 (AISI 304) |
| Lower cover | Chrome-nickel steel 1.4301 EN 10088 (AISI 304) |
| Upper cover | Chrome-nickel steel 1.4301 EN 10088 (AISI 304) |
| Spacer sleeve | Chrome-nickel steel 1.4301 EN 10088 (AISI 304) |
| Shaft | Chrome-nickel steel 1.4301 EN 10088 (AISI 304) |
| Plug | Chrome-nickel steel 1.4301 EN 10088 (AISI 304) |
| Mechanical seal | Hard metal/Carbon/EPDM |
| Wear ring | PPS |
| O-ring | NBR |
| Oval Counterflanges | Steel 1.4301 EN 10088 (AISI 304) (galvanized steel for MXV-B 50) |

# MXV-B

## EI: Pumps with frequency converter

The MXV-B EI pumps are available with power from 0,75 kW up to 7,5 kW, the pumps are equipped with I-MAT installed on board
Which allows to realize a variable-speed system extremely compact and efficient, ideal in applications of water supply and in the distribution of hot and cold water.
The pump is equipped with transducers suitable for operation and is already programmed at the factory.

## Features

- Energy saving
- Compact design
- Easy to use
- Programmable to suit the system requirements
- Reliability

## Construction

- The system consists of:
- Pump
- Induction motor
- I-MAT Frequency converter
- Motor adapter for the motor mounting of the frequency converter
- Connection cable between frequency converter and induction motor
- Transducers

## Main features

Rated motor power output from 0,75 kW to 7,5 kW
Control range from 1750 to 2900 rpm (2-pole)
Protection against dry running
Protection against operations with closed valve ports
Protection against  system leakages
Protection against overcurrent in the motor
Protection agains overvoltage and undervoltage of the power supply
Protection against current unbalances between phases

## Operating modes

**Constant pressure mode**
with pressure transducer
In this mode, the system maintains the preset pressure when the flow required by the installation changes.

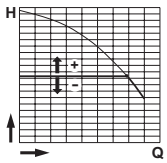


**Proportional pressure mode**
with pressure transducer
In this mode the system changes the working pressure according to the required flow rate.

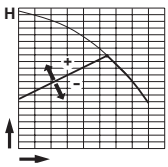


**Constant flow mode**
with flow meter
In this mode the system maintains a constant flow rate value in a point of the installation according to the required pressure.

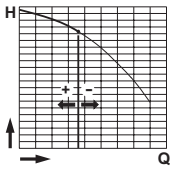


**Fixed speed mode**
with setting of the speed preferential rotation.
In this mode, by changing the working frequency, you may choose any operational curve included within the working range.

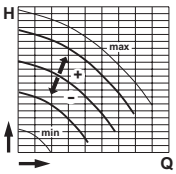


**Constant temperature mode**
with temperature transducer
In this mode the system keeps the temperature constant inside a system by changing the speed of the pump.

# MXV-B

calpeda®

## Coverage chart n ≈ 2900 rpm

### Three-phase

| | | | | | Q = Flow | | | | | | | | | |
|---|---|---|---|---|---|---|---|---|---|---|---|---|---|---|
| | | | | | m³/h | 0 | 1 | 1,5 | 2 | 2,5 | 3 | 3,5 | 4 | 4,5 |
| Model | 230V | 400V | P2 | | l/min | | 16,6 | 25 | 33,3 | 41,6 | 50 | 58,3 | 66,6 | 75 |
| | A | | kW | HP | H (m) = Total head | | | | | | | | | |
| MXV-B 25-303 O | 4 | 2,3 | 0,75 | 1 | | 34 | 32 | 30 | 28 | 26 | 23,5 | 20,5 | 17 | 12,5 |
| MXV-B 25-304 O | 4 | 2,3 | 0,75 | 1 | | 44 | 42,5 | 40 | 37,5 | 34,5 | 31 | 27 | 22,5 | 17 |
| MXV-B 25-305 O | 4 | 2,3 | 0,75 | 1 | | 56 | 53 | 50 | 47 | 43 | 39 | 34 | 28 | 21 |
| MXV-B 25-306 O | 4,6 | 2,7 | 1,1 | 1,5 | | 68 | 63,5 | 60,5 | 56 | 51,5 | 46,5 | 40,5 | 34 | 25 |
| MXV-B 25-307 O | 4,6 | 2,7 | 1,1 | 1,5 | | 79,5 | 74 | 70,5 | 65,5 | 60 | 54,5 | 47,5 | 39,5 | 30 |
| MXV-B 25-308 O | 7,5 | 4,3 | 1,5 | 2 | | 91 | 85 | 80,5 | 75 | 69 | 62 | 54 | 45,5 | 34 |
| MXV-B 25-310 O | 7,5 | 4,3 | 1,5 | 2 | | 114 | 106 | 101 | 94 | 86 | 78 | 68 | 57 | 42 |

### Single-phase

| | | | | | Q = Flow | | | | | | | | | |
|---|---|---|---|---|---|---|---|---|---|---|---|---|---|---|
| | | | | | m³/h | 0 | 1 | 1,5 | 2 | 2,5 | 3 | 3,5 | 4 | 4,5 |
| Model | 230V | P2 | | P1 | l/min | | 16,6 | 25 | 33,3 | 41,6 | 50 | 58,3 | 66,6 | 75 |
| | A | kW | HP | kW | H (m) = Total head | | | | | | | | | |
| MXV-BM 25-303 O | 5,8 | 0,75 | 1 | 1,01 | | 34 | 32 | 30 | 28 | 26 | 23,5 | 20,5 | 17 | 12,5 |
| MXV-BM 25-304 O | 5,8 | 0,75 | 1 | 1,01 | | 44 | 42,5 | 40 | 37,5 | 34,5 | 31 | 27 | 22,5 | 17 |
| MXV-BM 25-305 O | 5,8 | 0,75 | 1 | 1,01 | | 56 | 53 | 50 | 47 | 43 | 39 | 34 | 28 | 21 |
| MXV-BM 25-306 O | 7,4 | 1,1 | 1,5 | 1,44 | | 68 | 63,5 | 60,5 | 56 | 51,5 | 46,5 | 40,5 | 34 | 25 |
| MXV-BM 25-307 O | 7,4 | 1,1 | 1,5 | 1,44 | | 79,5 | 74 | 70,5 | 65,5 | 60 | 54,5 | 47,5 | 39,5 | 30 |
| MXV-BM 25-308 O | 9,2 | 1,5 | 2 | 2 | | 91 | 85 | 80,5 | 75 | 69 | 62 | 54 | 45,5 | 34 |
| MXV-BM 25-310 O | 9,2 | 1,5 | 2 | 2,3 | | 114 | 106 | 101 | 94 | 86 | 78 | 68 | 57 | 42 |

### Three-phase

| | | | | | Q = Flow | | | | | | | | | | |
|---|---|---|---|---|---|---|---|---|---|---|---|---|---|---|---|
| | | | | | m³/h | 0 | 2,5 | 3 | 3,5 | 4 | 4,5 | 5 | 6 | 7 | 8 |
| Model | 230V | 400V | P2 | | l/min | | 41,6 | 50 | 58,3 | 66,6 | 75 | 83,3 | 100 | 117 | 133 |
| | A | | kW | HP | H (m) = Total head | | | | | | | | | | |
| MXV-B 32-503 O | 4 | 2,3 | 0,75 | 1 | | 34 | 31 | 30,5 | 29 | 28 | 26,5 | 25 | 21 | 17 | 11,5 |
| MXV-B 32-504 O | 4,6 | 2,7 | 1,1 | 1,5 | | 45 | 41,5 | 40 | 38,5 | 36,5 | 34,5 | 32,5 | 27,5 | 22 | 14,5 |
| MXV-B 32-505 O | 4,6 | 2,7 | 1,1 | 1,5 | | 56 | 51,5 | 50 | 48 | 46 | 43,5 | 41 | 34,5 | 27,5 | 18,5 |
| MXV-B 32-506 O | 7,5 | 4,3 | 1,5 | 2 | | 68 | 62 | 60 | 58 | 55,5 | 52,5 | 49,5 | 42 | 33,5 | 22,5 |
| MXV-B 32-507 O | 7,5 | 4,3 | 1,5 | 2 | | 79,5 | 72,5 | 70,5 | 68 | 65 | 61,5 | 58 | 49 | 39 | 26,5 |
| MXV-B 32-508 O | 9,2 | 5,3 | 2,2 | 3 | | 91 | 83 | 80,5 | 78 | 74 | 70 | 66 | 56 | 44,5 | 30 |
| MXV-B 32-510 O | 9,2 | 5,3 | 2,2 | 3 | | 114 | 104 | 101 | 97,5 | 93 | 88 | 83 | 70 | 56 | 38 |

### Single-phase

| | | | | | Q = Flow | | | | | | | | | | |
|---|---|---|---|---|---|---|---|---|---|---|---|---|---|---|---|
| | | | | | m³/h | 0 | 2,5 | 3 | 3,5 | 4 | 4,5 | 5 | 6 | 7 | 8 |
| Model | 230V | P2 | | P1 | l/min | | 41,6 | 50 | 58,3 | 66,6 | 75 | 83,3 | 100 | 117 | 133 |
| | A | kW | HP | kW | H (m) = Total head | | | | | | | | | | |
| MXV-BM 32-503 O | 5,8 | 0,75 | 1 | 1,01 | | 34 | 31 | 30,5 | 29 | 28 | 26,5 | 25 | 21 | 17 | 11,5 |
| MXV-BM 32-504 O | 7,4 | 1,1 | 1,5 | 1,44 | | 45 | 41,5 | 40 | 38,5 | 36,5 | 34,5 | 32,5 | 27,5 | 22 | 14,5 |
| MXV-BM 32-505 O | 7,4 | 1,1 | 1,5 | 1,44 | | 56 | 51,5 | 50 | 48 | 46 | 43,5 | 41 | 34,5 | 27,5 | 18,5 |
| MXV-BM 32-506 O | 9,2 | 1,5 | 2 | 2 | | 68 | 62 | 60 | 58 | 55,5 | 52,5 | 49,5 | 42 | 33,5 | 22,5 |
| MXV-BM 32-507 O | 9,2 | 1,5 | 2 | 2,3 | | 79,5 | 72,5 | 70,5 | 68 | 65 | 61,5 | 58 | 49 | 39 | 26,5 |

# MXV-B

calpeda®

## Coverage chart n ≈ 2900 rpm

### Three-phase

| | | | | | | Q = Flow | | | | | | | | | | |
|---|---|---|---|---|---|---|---|---|---|---|---|---|---|---|---|---|
| | | | | | | m³/h | 0 | 5 | 6 | 7 | 8 | 9 | 10 | 11 | 12 | 13 |
| Model | 230V | 400V | 690V | P2 | | l/min | | 83,3 | 100 | 117 | 133 | 150 | 167 | 183 | 200 | 217 |
| | A | | | kW | HP | H (m) = Total head | | | | | | | | | | |
| MXV-B 40-903 O | 4,6 | 2,7 | - | 1,1 | 1,5 | | 35,5 | 32,5 | 31,5 | 31 | 29,5 | 28 | 25,5 | 22,5 | 19,5 | 15,5 |
| MXV-B 40-904 O | 7,5 | 4,3 | - | 1,5 | 2 | | 47 | 43 | 42 | 41 | 40 | 37 | 34 | 30 | 26 | 21 |
| MXV-B 40-905 O | 9,2 | 5,3 | - | 2,2 | 3 | | 59 | 54 | 53 | 51 | 50 | 47 | 43 | 38 | 32 | 26 |
| MXV-B 40-906 O | 9,2 | 5,3 | - | 2,2 | 3 | | 71 | 65 | 63 | 62 | 59 | 56 | 51 | 45 | 39 | 31 |
| MXV-B 40-907 O | 11,5 | 6,6 | - | 3 | 4 | | 83 | 76 | 74 | 72 | 69 | 66 | 60 | 53 | 45 | 36 |
| MXV-B 40-908 O | 11,5 | 6,6 | - | 3 | 4 | | 95 | 87 | 85 | 82 | 79 | 75 | 69 | 60 | 51 | 42 |
| MXV-B 40-910 O | - | 9,6 | 5,5 | 3,7 | 5 | | 119 | 109 | 106 | 103 | 99 | 94 | 86 | 75 | 64 | 52 |

### Single-phase

| | | | | | Q = Flow | | | | | | | | | | |
|---|---|---|---|---|---|---|---|---|---|---|---|---|---|---|---|
| | | | | | m³/h | 0 | 5 | 6 | 7 | 8 | 9 | 10 | 11 | 12 | 13 |
| Model | 230V | P2 | | P1 | l/min | | 83,3 | 100 | 117 | 133 | 150 | 167 | 183 | 200 | 217 |
| | A | kW | HP | kW | H (m) = Total head | | | | | | | | | | |
| MXV-BM 40-903 O | 7,4 | 1,1 | 1,5 | 1,44 | | 35,5 | 32,5 | 31,5 | 31 | 29,5 | 28 | 25,5 | 22,5 | 19,5 | 15,5 |
| MXV-BM 40-904 O | 9,2 | 1,5 | 2 | 2,3 | | 47 | 43 | 42 | 41 | 40 | 37 | 34 | 30 | 26 | 21 |

### Three-phase

| | | | | | | Q = Flow | | | | | | | | | | |
|---|---|---|---|---|---|---|---|---|---|---|---|---|---|---|---|---|
| | | | | | | m³/h | 0 | 8 | 10 | 12 | 14 | 16 | 18 | 20 | 22 | 24 |
| Model | 230V | 400V | 690V | P2 | | l/min | | 133 | 167 | 200 | 233 | 267 | 300 | 333 | 367 | 400 |
| | A | | | kW | HP | H (m) = Total head | | | | | | | | | | |
| MXV-B 50-1502 O | 7,4 | 4,3 | - | 1,5 | 2 | | 27,9 | 24,6 | 23,8 | 22,7 | 21,4 | 19,8 | 17,8 | 15,4 | 12,7 | 9,5 |
| MXV-B 50-1503 O | 9,2 | 5,3 | - | 2,2 | 3 | | 43,6 | 39,1 | 37,3 | 35,8 | 34,3 | 31,3 | 28,2 | 24,8 | 19,7 | 14 |
| MXV-B 50-1504 O | 11,4 | 6,6 | - | 3 | 4 | | 58 | 52,4 | 50,5 | 48,5 | 46,5 | 43,7 | 39,8 | 35,3 | 28,9 | 21,1 |
| MXV-B 50-1505 O | - | 9,6 | 5,5 | 4 | 5,5 | | 72,5 | 65,5 | 63 | 60,5 | 57,5 | 54,7 | 49,7 | 44,1 | 36,1 | 26,3 |
| MXV-B 50-1506 O | - | 10,8 | 6,2 | 5,5 | 7,5 | | 85 | 78 | 75,5 | 72 | 68 | 63 | 57,5 | 50,5 | 42,5 | 33,5 |
| MXV-B 50-1507 O | - | 10,8 | 6,2 | 5,5 | 7,5 | | 99 | 91,5 | 88 | 84 | 79,5 | 73,5 | 67 | 59 | 49,5 | 39 |
| MXV-B 50-1508 O | - | 10,8 | 6,2 | 5,5 | 7,5 | | 115 | 105 | 101 | 97 | 92 | 86 | 78 | 69 | 58 | 45 |
| MXV-B 50-1509 O | - | 14,3 | 8,3 | 7,5 | 10 | | 129 | 118 | 114 | 110 | 104 | 97 | 88 | 77 | 65 | 51 |
| MXV-B 50-1510 O | - | 14,3 | 8,3 | 7,5 | 10 | | 141 | 130 | 126 | 121 | 114 | 105 | 95 | 83 | 69 | 54 |

**Test results with clean cold water, without gas content.**
A safety margin of + 0.5 m is recommended for the NPSH value.
Tolerances according to UNI EN ISO 9906:2012
**Head and power values valid for liquids with density ρ = 1,0 kg/dm3 and kinematic viscosity v = max 20 mm2/sec.** Total head in m
**P1:** Maximum power input.
**P2:** Rated motor power output.
**Pst:** Power with reference to one stage.

# MXV-B

## Characteristic curves n ≈ 2900 rpm

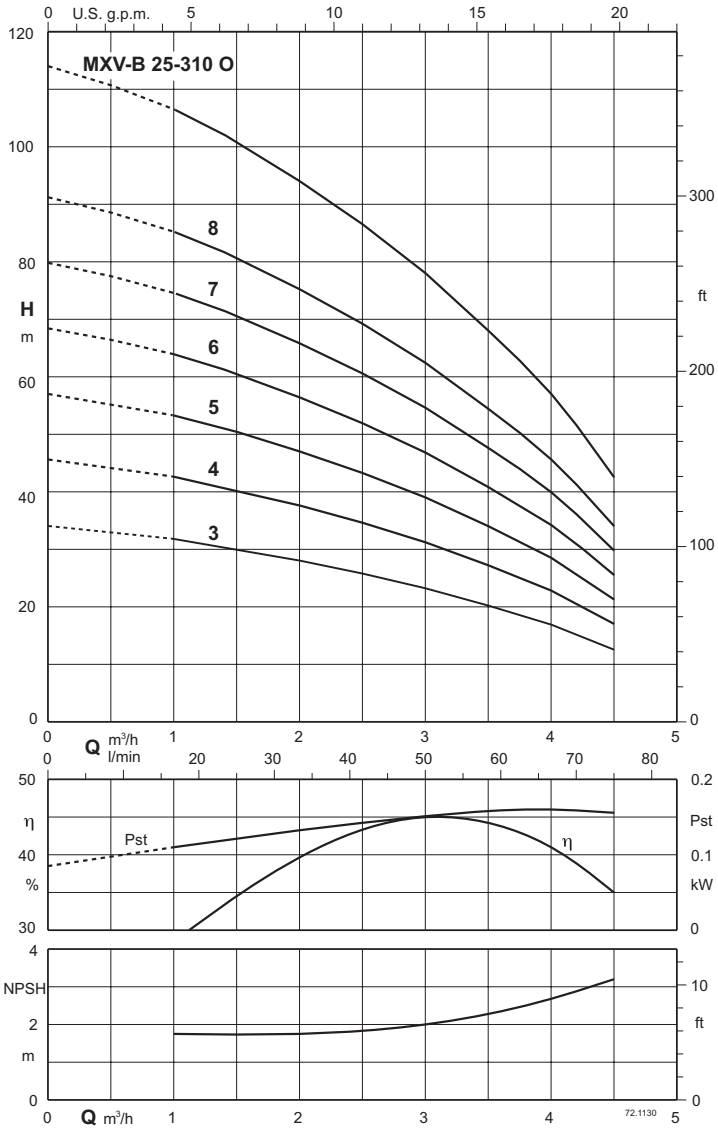


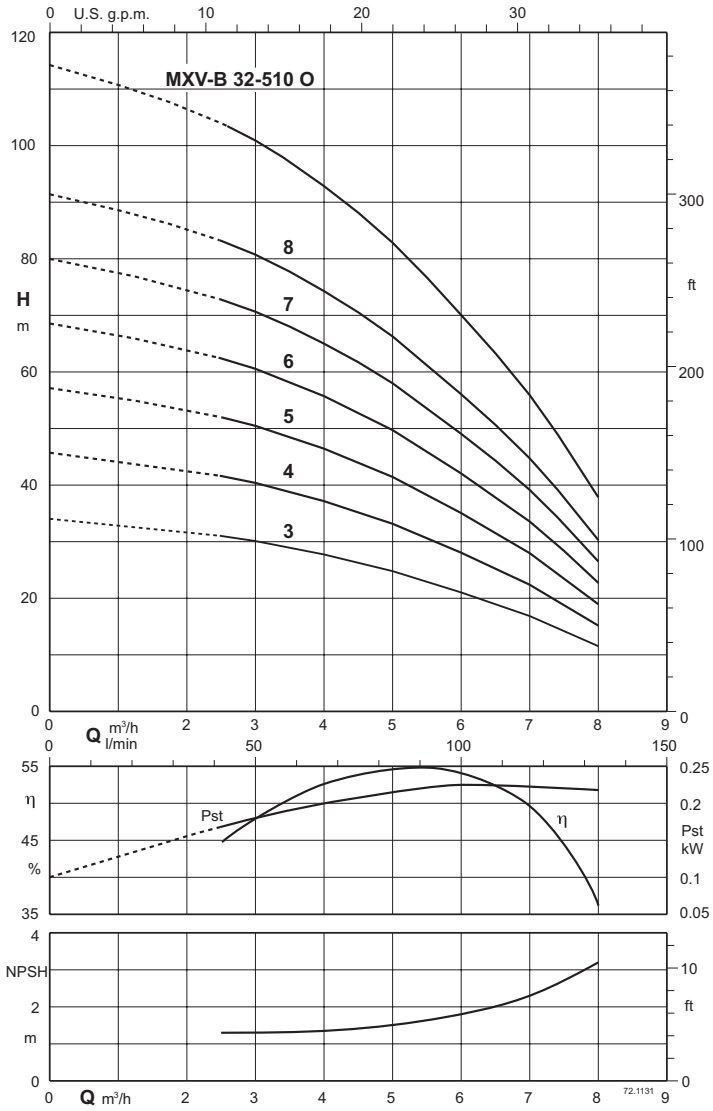


Test results with clean cold water, without gas content.
A safety margin of + 0.5 m is recommended for the NPSH value.
Tolerances in accordance with UNI EN ISO 9906:2012
Head and power values valid for liquids with density ρ = 1,0 kg/dm3 and kinematic viscosity ν = max 20 mm2/sec.
Pst = Power with reference to one stage.
A* Calpeda motor currents

# MXV-B

## Characteristic curves n ≈ 2900 rpm

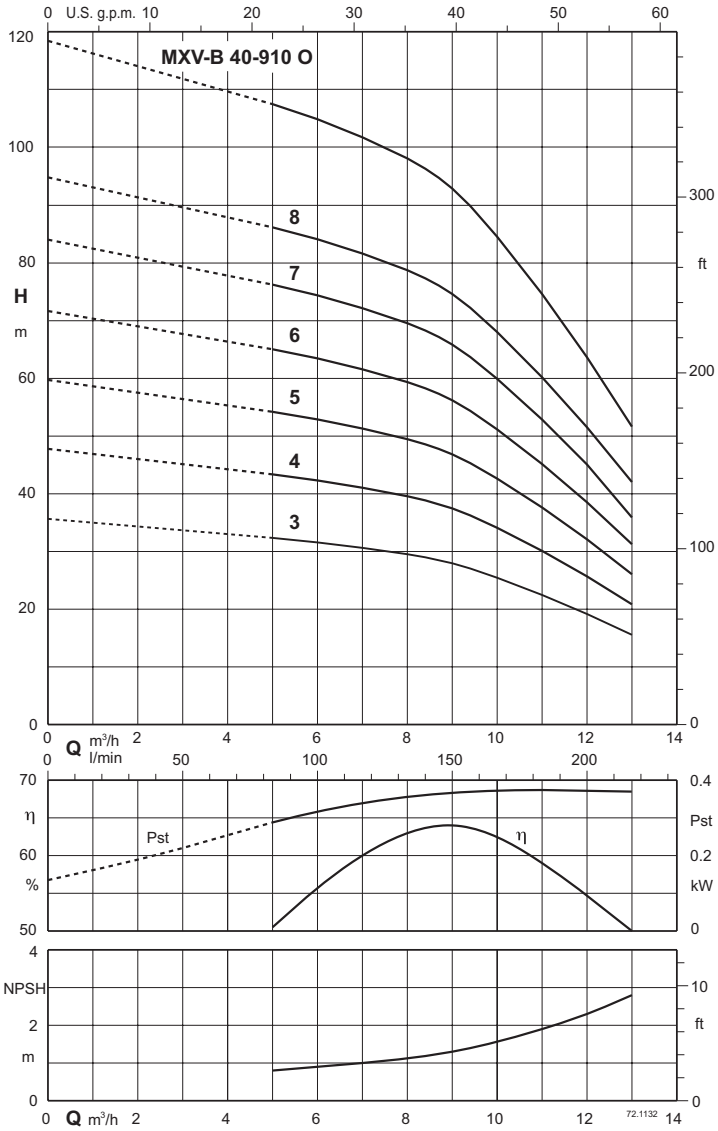


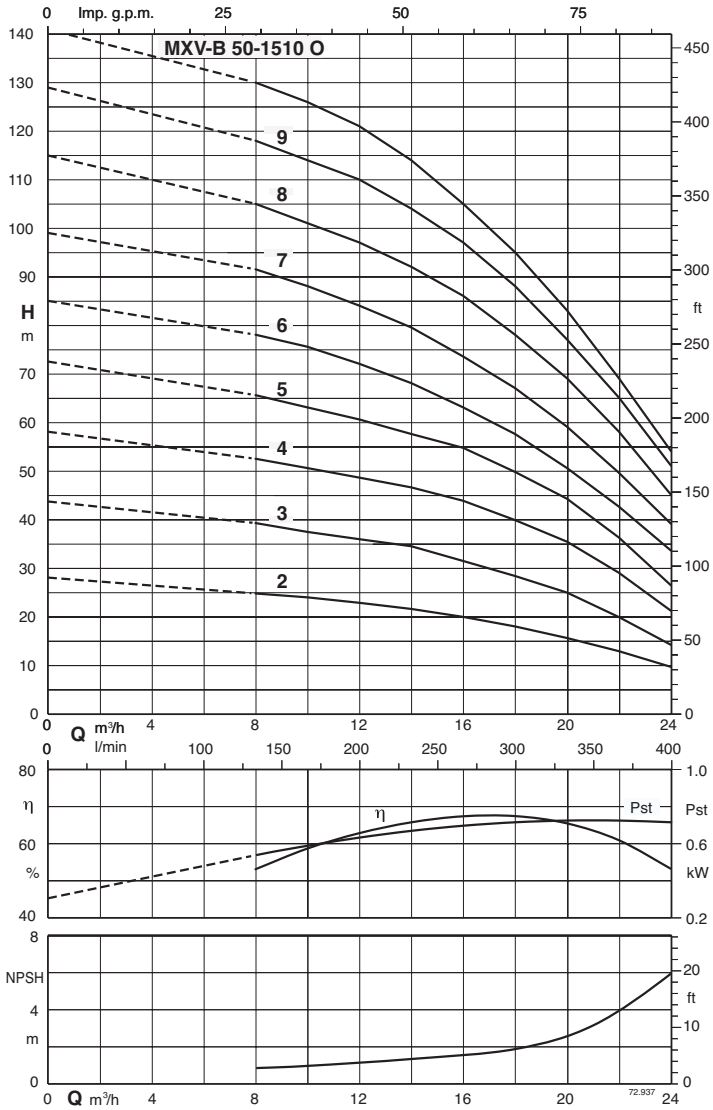


Test results with clean cold water, without gas content.
A safety margin of + 0.5 m is recommended for the NPSH value.
Tolerances in accordance with UNI EN ISO 9906:2012
Head and power values valid for liquids with density ρ = 1,0 kg/dm3 and kinematic viscosity ν = max 20 mm2/sec.
Pst = Power with reference to one stage.
A* Calpeda motor currents

# MXV-B

calpeda

## Dimensions and weights

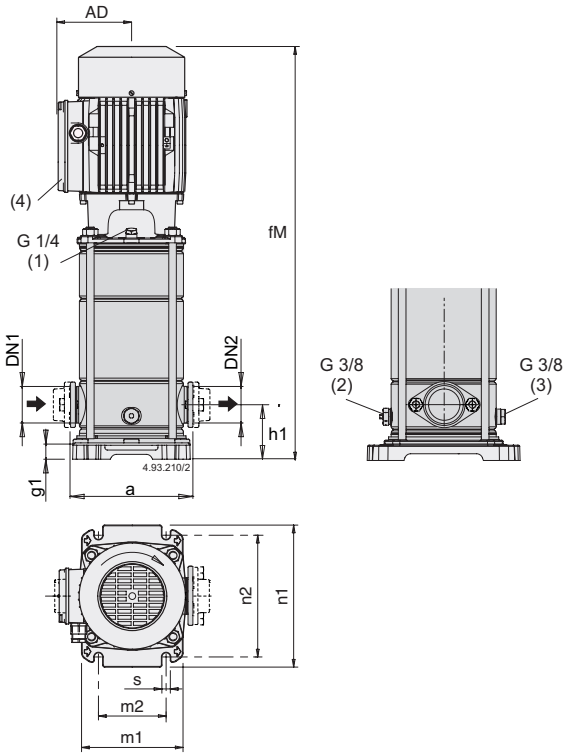


### Oval Counterflanges PN 16

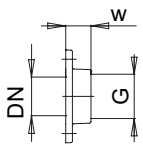


PN 16

| DN | G | w | Fori N. | Fori Ø |
|---|---|---|---|---|
| 25 | 1 | 23 | 2 | 12 |
| 32 | 1 1/4 | 23 | 2 | 12 |
| 40 | 1 1/2 | 26 | 2 | 15 |
| 50 | 2 | 34 | 2 | 15 |

### Oval Flanges PN 16

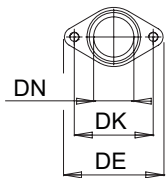


PN 16

| DN | DE | DK | Fori N. | Fori Ø |
|---|---|---|---|---|
| 25 | 95 | 75 | 2 | M10 |
| 32 | 95 | 75 | 2 | M10 |
| 40 | 125 | 100 | 2 | M12 |
| 50 | 125 | 100 | 2 | M12 |

(1) Filling | (2) Air vent suction side | (3) Draining | (4) Standard position of terminal box

| TYPE | | | mm | | | | | | | | | | kg |
|---|---|---|---|---|---|---|---|---|---|---|---|---|---|
| | DN1 | DN2 | a | AD | fM | g1 | h1 | m1 | m2 | n1 | n2 | s | Weight |
| MXV-B 25-303 O | 25 | 25 | 160 | 128 | 553 | 20 | 50 | 165 | 100 | 205 | 180 | 13 | 22.6 |
| MXV-B 25-304 O | 25 | 25 | 160 | 128 | 553 | 20 | 50 | 165 | 100 | 205 | 180 | 13 | 22.8 |
| MXV-B 25-305 O | 25 | 25 | 160 | 128 | 577 | 20 | 50 | 165 | 100 | 205 | 180 | 13 | 23.5 |
| MXV-B 25-306 O | 25 | 25 | 160 | 128 | 601 | 20 | 50 | 165 | 100 | 205 | 180 | 13 | 26.3 |
| MXV-B 25-307 O | 25 | 25 | 160 | 128 | 625 | 20 | 50 | 165 | 100 | 205 | 180 | 13 | 26.9 |
| MXV-B 25-308 O | 25 | 25 | 160 | 128 | 649 | 20 | 50 | 165 | 100 | 205 | 180 | 13 | 29 |
| MXV-B 25-310 O | 25 | 25 | 160 | 128 | 697 | 20 | 50 | 165 | 100 | 205 | 180 | 13 | 30 |
| MXV-B 32-503 O | 32 | 32 | 160 | 128 | 553 | 20 | 50 | 165 | 100 | 205 | 180 | 13 | 22.5 |
| MXV-B 32-504 O | 32 | 32 | 160 | 128 | 553 | 20 | 50 | 165 | 100 | 205 | 180 | 13 | 24.8 |
| MXV-B 32-505 O | 32 | 32 | 160 | 128 | 577 | 20 | 50 | 165 | 100 | 205 | 180 | 13 | 25.5 |
| MXV-B 32-506 O | 32 | 32 | 160 | 128 | 601 | 20 | 50 | 165 | 100 | 205 | 180 | 13 | 27.7 |
| MXV-B 32-507 O | 32 | 32 | 160 | 128 | 625 | 20 | 50 | 165 | 100 | 205 | 180 | 13 | 28 |
| MXV-B 32-508 O | 32 | 32 | 160 | 128 | 689 | 20 | 50 | 165 | 100 | 205 | 180 | 13 | 32 |
| MXV-B 32-510 O | 32 | 32 | 160 | 128 | 737 | 20 | 50 | 165 | 100 | 205 | 180 | 13 | 33.4 |
| MXV-B 40-903 O | 40 | 40 | 200 | 128 | 601 | 30.5 | 80 | 190 | 130 | 250 | 215 | 14 | 28.5 |
| MXV-B 40-904 O | 40 | 40 | 200 | 128 | 601 | 30.5 | 80 | 190 | 130 | 250 | 215 | 14 | 30.5 |
| MXV-B 40-905 O | 40 | 40 | 200 | 128 | 631 | 30.5 | 80 | 190 | 130 | 250 | 215 | 14 | 34.3 |
| MXV-B 40-906 O | 40 | 40 | 200 | 128 | 701 | 30.5 | 80 | 190 | 130 | 250 | 215 | 14 | 35.2 |
| MXV-B 40-907 O | 40 | 40 | 200 | 138 | 755 | 30.5 | 80 | 190 | 130 | 250 | 215 | 14 | 42.5 |
| MXV-B 40-908 O | 40 | 40 | 200 | 138 | 789 | 30.5 | 80 | 190 | 130 | 250 | 215 | 14 | 43.3 |
| MXV-B 40-910 O | 40 | 40 | 200 | 138 | 849 | 30.5 | 80 | 190 | 130 | 250 | 215 | 14 | 48.3 |
| MXV-B 50-1502 O | 50 | 50 | 200 | 128 | 598 | 25 | 90 | 196 | 130 | 250 | 215 | 13 | - |
| MXV-B 50-1503 O | 50 | 50 | 200 | 128 | 686 | 25 | 90 | 196 | 130 | 250 | 215 | 13 | 37.5 |
| MXV-B 50-1504 O | 50 | 50 | 200 | 138 | 762 | 25 | 90 | 196 | 130 | 250 | 215 | 13 | 46.4 |
| MXV-B 50-1505 O | 50 | 50 | 200 | 138 | 810 | 25 | 90 | 196 | 130 | 250 | 215 | 13 | 50.8 |
| MXV-B 50-1506 O | 50 | 50 | 200 | 160 | 886 | 25 | 90 | 196 | 130 | 250 | 215 | 13 | 64.5 |
| MXV-B 50-1507 O | 50 | 50 | 200 | 160 | 934 | 25 | 90 | 196 | 130 | 250 | 215 | 13 | 65 |
| MXV-B 50-1508 O | 50 | 50 | 200 | 160 | 982 | 25 | 90 | 196 | 130 | 250 | 215 | 13 | 67 |
| MXV-B 50-1509 O | 50 | 50 | 200 | 160 | 1030 | 25 | 90 | 196 | 130 | 250 | 215 | 13 | 74 |
| MXV-B 50-1510 O | 50 | 50 | 200 | 160 | 1079 | 25 | 90 | 196 | 130 | 250 | 215 | 13 | - |

# MXV-B

## Dimensions and weights

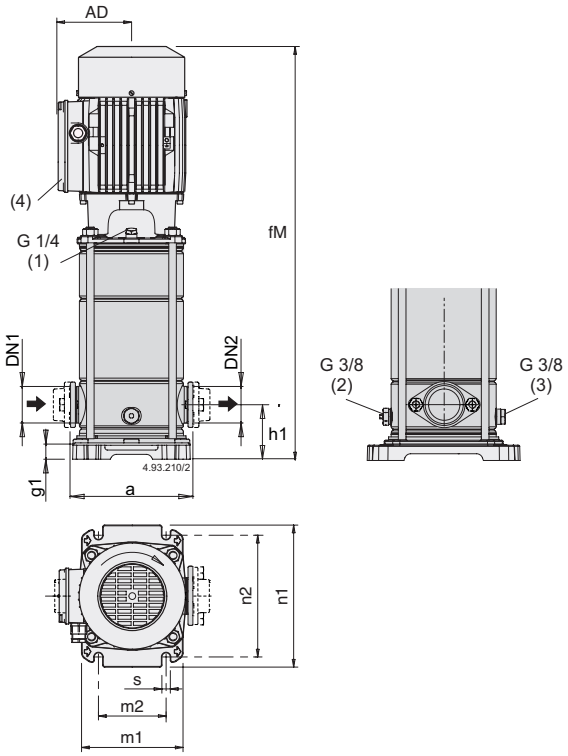


### Oval Counterflanges PN 16

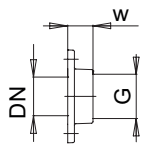


PN 16

| DN | G | w | Fori N. | Fori Ø |
|---|---|---|---|---|
| 25 | 1 | 23 | 2 | 12 |
| 32 | 1 1/4 | 23 | 2 | 12 |
| 40 | 1 1/2 | 26 | 2 | 15 |
| 50 | 2 | 34 | 2 | 15 |

### Oval Flanges PN 16

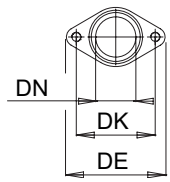


PN 16

| DN | DE | DK | Fori N. | Fori Ø |
|---|---|---|---|---|
| 25 | 95 | 75 | 2 | M10 |
| 32 | 95 | 75 | 2 | M10 |
| 40 | 125 | 100 | 2 | M12 |
| 50 | 125 | 100 | 2 | M12 |

(1) Filling | (2) Air vent suction side | (3) Draining | (4) Standard position of terminal box

| TYPE | | | mm | | | | | | | | | | kg |
|---|---|---|---|---|---|---|---|---|---|---|---|---|---|
| | DN1 | DN2 | a | AD | fM | g1 | h1 | m1 | m2 | n1 | n2 | s | Weight |
| MXV-BM 25-303 O | 25 | 25 | 160 | 128 | 553 | 20 | 50 | 165 | 100 | 205 | 180 | 13 | 24.1 |
| MXV-BM 25-304 O | 25 | 25 | 160 | 128 | 553 | 20 | 50 | 165 | 100 | 205 | 180 | 13 | - |
| MXV-BM 25-305 O | 25 | 25 | 160 | 128 | 577 | 20 | 50 | 165 | 100 | 205 | 180 | 13 | 25.2 |
| MXV-BM 25-306 O | 25 | 25 | 160 | 128 | 601 | 20 | 50 | 165 | 100 | 205 | 180 | 13 | 27.4 |
| MXV-BM 25-307 O | 25 | 25 | 160 | 128 | 625 | 20 | 50 | 165 | 100 | 205 | 180 | 13 | 27.4 |
| MXV-BM 25-308 O | 25 | 25 | 160 | 128 | 649 | 20 | 50 | 165 | 100 | 205 | 180 | 13 | 29 |
| MXV-BM 25-310 O | 25 | 25 | 160 | 128 | 697 | 20 | 50 | 165 | 100 | 205 | 180 | 13 | 29.8 |
| MXV-BM 32-503 O | 32 | 32 | 160 | 128 | 553 | 20 | 50 | 165 | 100 | 205 | 180 | 13 | 26.4 |
| MXV-BM 32-504 O | 32 | 32 | 160 | 128 | 553 | 20 | 50 | 165 | 100 | 205 | 180 | 13 | - |
| MXV-BM 32-505 O | 32 | 32 | 160 | 128 | 577 | 20 | 50 | 165 | 100 | 205 | 180 | 13 | 26.7 |
| MXV-BM 32-506 O | 32 | 32 | 160 | 128 | 601 | 20 | 50 | 165 | 100 | 205 | 180 | 13 | 27.6 |
| MXV-BM 32-507 O | 32 | 32 | 160 | 128 | 625 | 20 | 50 | 165 | 100 | 205 | 180 | 13 | 27.7 |
| MXV-BM 40-903 O | 40 | 40 | 200 | 128 | 601 | 30.5 | 80 | 190 | 130 | 250 | 215 | 14 | 28.9 |
| MXV-BM 40-904 O | 40 | 40 | 200 | 128 | 601 | 30.5 | 80 | 190 | 130 | 250 | 215 | 14 | 30.3 |

# MXV-B

calpeda

## Dimensions and weights

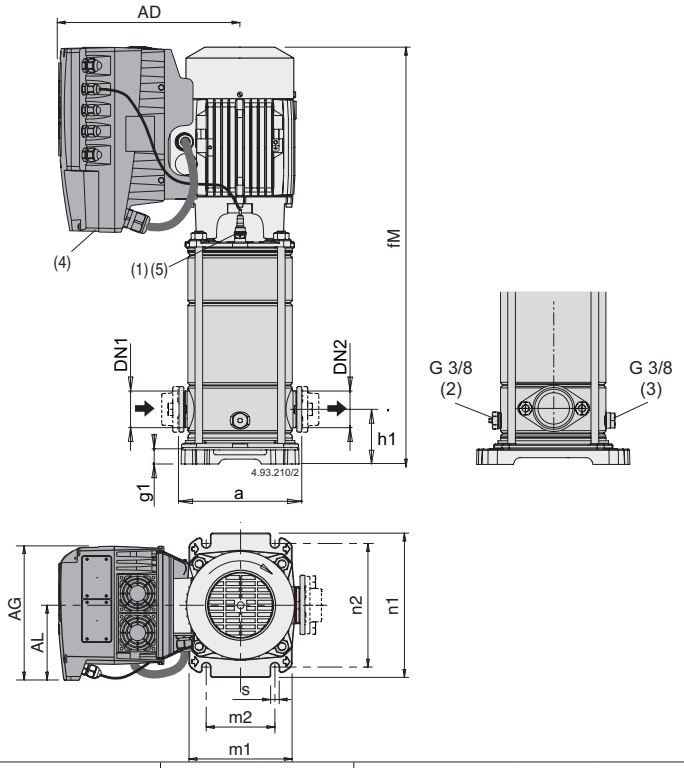


### Oval Counterflanges PN 16

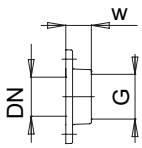


PN 16

| DN | G | w | Fori N. | Fori Ø |
|---|---|---|---|---|
| 25 | 1 | 23 | 2 | 12 |
| 32 | 1 1/4 | 23 | 2 | 12 |
| 40 | 1 1/2 | 26 | 2 | 15 |
| 50 | 2 | 34 | 2 | 15 |

### Oval Flanges PN 16

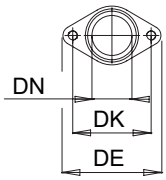


PN 16

| DN | DE | DK | Fori N. | Fori Ø |
|---|---|---|---|---|
| 25 | 95 | 75 | 2 | M10 |
| 32 | 95 | 75 | 2 | M10 |
| 40 | 125 | 100 | 2 | M12 |
| 50 | 125 | 100 | 2 | M12 |

(1) Filling | (2) Air vent suction side | (3) Draining | (4) Standard position of I-MAT

| TYPE | | | mm | | | | | | | | | | | | kg |
|---|---|---|---|---|---|---|---|---|---|---|---|---|---|---|---|
| | DN1 | DN2 | a | AD | AG | AL | fM | g1 | h1 | m1 | m2 | n1 | n2 | s | Weight |
| MXV-B EI 25-303 O | 25 | 25 | 160 | 286 | 190 | 105 | 553 | 20 | 50 | 165 | 100 | 205 | 180 | 13 | - |
| MXV-B EI 25-304 O | 25 | 25 | 160 | 286 | 190 | 105 | 553 | 20 | 50 | 165 | 100 | 205 | 180 | 13 | 29.6 |
| MXV-B EI 25-305 O | 25 | 25 | 160 | 286 | 190 | 105 | 577 | 20 | 50 | 165 | 100 | 205 | 180 | 13 | 29.2 |
| MXV-B EI 25-306 O | 25 | 25 | 160 | 286 | 190 | 105 | 601 | 20 | 50 | 165 | 100 | 205 | 180 | 13 | - |
| MXV-B EI 25-307 O | 25 | 25 | 160 | 286 | 190 | 105 | 625 | 20 | 50 | 165 | 100 | 205 | 180 | 13 | 32.4 |
| MXV-B EI 25-308 O | 25 | 25 | 160 | 286 | 190 | 105 | 649 | 20 | 50 | 165 | 100 | 205 | 180 | 13 | - |
| MXV-B EI 25-310 O | 25 | 25 | 160 | 286 | 190 | 105 | 697 | 20 | 50 | 165 | 100 | 205 | 180 | 13 | 36.6 |
| MXV-B EI 32-503 O | 32 | 32 | 160 | 286 | 190 | 105 | 553 | 20 | 50 | 165 | 100 | 205 | 180 | 13 | - |
| MXV-B EI 32-504 O | 32 | 32 | 160 | 286 | 190 | 105 | 553 | 20 | 50 | 165 | 100 | 205 | 180 | 13 | 25.3 |
| MXV-B EI 32-505 O | 32 | 32 | 160 | 286 | 190 | 105 | 577 | 20 | 50 | 165 | 100 | 205 | 180 | 13 | - |
| MXV-B EI 32-506 O | 32 | 32 | 160 | 286 | 190 | 105 | 601 | 20 | 50 | 165 | 100 | 205 | 180 | 13 | 36 |
| MXV-B EI 32-507 O | 32 | 32 | 160 | 286 | 190 | 105 | 625 | 20 | 50 | 165 | 100 | 205 | 180 | 13 | 35.2 |
| MXV-B EI 32-508 O | 32 | 32 | 160 | 294 | 210 | 118 | 689 | 20 | 50 | 165 | 100 | 205 | 180 | 13 | 43 |
| MXV-B EI 32-510 O | 32 | 32 | 160 | 294 | 210 | 118 | 737 | 20 | 50 | 165 | 100 | 205 | 180 | 13 | 43.8 |
| MXV-B EI 40-903 O | 40 | 40 | 200 | 286 | 190 | 105 | 601 | 30.5 | 80 | 190 | 130 | 250 | 215 | 14 | - |
| MXV-B EI 40-904 O | 40 | 40 | 200 | 286 | 190 | 105 | 601 | 30.5 | 80 | 190 | 130 | 250 | 215 | 14 | - |
| MXV-B EI 40-905 O | 40 | 40 | 200 | 294 | 210 | 118 | 631 | 30.5 | 80 | 190 | 130 | 250 | 215 | 14 | 40.4 |
| MXV-B EI 40-906 O | 40 | 40 | 200 | 294 | 210 | 118 | 701 | 30.5 | 80 | 190 | 130 | 250 | 215 | 14 | 41 |
| MXV-B EI 40-907 O | 40 | 40 | 200 | 294 | 210 | 118 | 755 | 30.5 | 80 | 190 | 130 | 250 | 215 | 14 | - |
| MXV-B EI 40-908 O | 40 | 40 | 200 | 294 | 210 | 118 | 789 | 30.5 | 80 | 190 | 130 | 250 | 215 | 14 | 42.4 |
| MXV-B EI 40-910 O | 40 | 40 | 200 | 294 | 210 | 118 | 849 | 30.5 | 80 | 190 | 130 | 250 | 215 | 14 | 54.5 |
| MXV-B EI 50-1502 O | 50 | 50 | 200 | 286 | 190 | 105 | 598 | 25 | 90 | 196 | 130 | 250 | 215 | 13 | - |
| MXV-B EI 50-1503 O | 50 | 50 | 200 | 286 | 210 | 118 | 686 | 25 | 90 | 196 | 130 | 250 | 215 | 13 | - |
| MXV-B EI 50-1504 O | 50 | 50 | 200 | 294 | 210 | 118 | 762 | 25 | 90 | 196 | 130 | 250 | 215 | 13 | - |
| MXV-B EI 50-1505 O | 50 | 50 | 200 | 294 | 210 | 118 | 810 | 25 | 90 | 196 | 130 | 250 | 215 | 13 | - |
| MXV-B EI 50-1506 O | 50 | 50 | 200 | 321 | 210 | 118 | 886 | 25 | 90 | 196 | 130 | 250 | 215 | 13 | - |
| MXV-B EI 50-1507 O | 50 | 50 | 200 | 321 | 210 | 118 | 934 | 25 | 90 | 196 | 130 | 250 | 215 | 13 | - |
| MXV-B EI 50-1508 O | 50 | 50 | 200 | 321 | 210 | 118 | 982 | 25 | 90 | 196 | 130 | 250 | 215 | 13 | - |
| MXV-B EI 50-1509 O | 50 | 50 | 200 | 364 | 281 | 153 | 1030 | 25 | 90 | 196 | 130 | 250 | 215 | 13 | - |
| MXV-B EI 50-1510 O | 50 | 50 | 200 | 364 | 281 | 153 | 1079 | 25 | 90 | 196 | 130 | 250 | 215 | 13 | - |

# MXV

**Coverage chart n ≈ 2900 rpm**

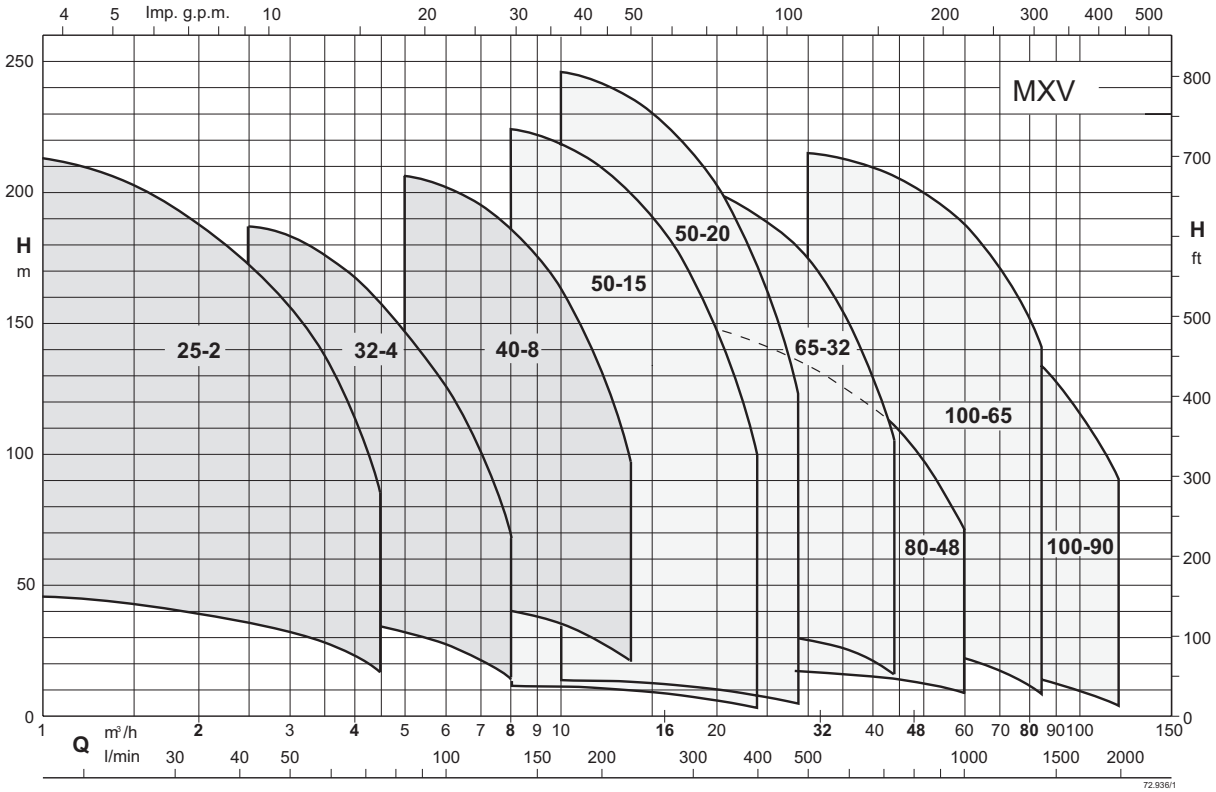


# Vertical multi-stage in-line pumps stainless steel

# MXV

## Construction

Vertical multi-stage pumps with suction and delivery connections of the same diameter and arranged along the same axis (in-line).
Corrosion-resistant bearing sleeves lubricated by the pumped liquid.
Removal of the mechanical seal without dismantling the motor (for MXV 25-32-40-50,100 with motors exceeding 4 KW).
A pump with thrust bearing and sleeve coupling for use of any standard motor with IM V1 construction.
Version with frequency converter (on request).

## Applications

For water supply systems.
For clean non-explosive liquids, without solid, filamentary or abrasive matter and non-aggressive for stainless steel (with adaptation of sealing materials on request).
A universal pump for civil and industrial use, for pressure boosting systems, high-pressure washing plants, irrigation, agricultural uses and sport installations.

## Operating conditions

Temperature of liquid: from -15 °C to +110 °C.
Ambient temperature up to 40° C.
Maximum permissible pressure in pump casing: 25 bar, (16 bar for pumps with oval flanges).
Continuous duty.

**Direction of rotation:**
- Clockwise as seen from the motor for MXV, MXVL 25,32,40,50,100
- Anticlockwise as seen from the motor for MXV, MXVL 65,80

## Motor

Standard-type: 2-pole induction motor, 50 Hz (n ≈ 2900 rpm).
Motor suitable for operation with frequency converter.
Classification scheme IE3 for three-phase motors from 0,75 kW.
Construction IM V1.
Insulation class F.
IP protection: IP55
Three-phase with rated voltage: up to 3 kW 230/400 V;
from 4 kW 400/690 V.

**The electropumps comply with the European Regulation no. 547/2012.**

**Variants (to be specified when ordering)**
Pump with flanged ports.
Pump with oval flange ports (O) (for MXV 25,32,40,50).
Pump without motor.
Pump with standard motor.

**Other variants (on request)**
O-rings FPM.
Other mechanical seal.
Pump with motor of Client's choice (if available).
Single-phase motor 230 V, up to 2.2 kW.
Pump with support feet for horizontal installation (H1 or H2).
Other voltages.
Frequency 60 Hz.

## Designation

Example MXV L EI 25-305 O H1 *
MXV = Series
L = AISI 316L vesion (no code = AISI 304 vesion)
EI = With frequency converter I-MAT
25 = DN ports in mm
3 = Rated capacity in m3/h
05 = Number of stages
O = oval flange ports (only for MXV(L) 25,32,40,50)
H1 = with support feet for horizontal installation H, variant 1
* = with motor (or without motor) * with no further designation = with standard motor

## MXV(L) 25, 32, 40, 50

MXV: Internal parts in contact with the liquid in chrome-nickel stainless steel AISI 304, with flanges, lantern bracket and base plate in cast iron.
MXVL: Internal parts in contact with the liquid in chrome-nickel stainless steel AISI 316, with flanges, lantern bracket and base plate in cast iron.

| Components | Materials MXV | Materials MXVL |
|---|---|---|
| Flange (wetted part) | Chrome-nickel steel 1.4301 EN 10088 (AISI 304) | Stainless Steel 1.4404 EN 10088 (AISI 316L) |
| External jacket | Chrome-nickel steel 1.4301 EN 10088 (AISI 304) | Stainless Steel 1.4404 EN 10088 (AISI 316L) |
| Suction casing | Chrome-nickel steel 1.4301 EN 10088 (AISI 304) | Stainless Steel 1.4404 EN 10088 (AISI 316L) |
| Delivery casing | Chrome-nickel steel 1.4301 EN 10088 (AISI 304) | Stainless Steel 1.4404 EN 10088 (AISI 316L) |
| Stage casing | Chrome-nickel steel 1.4301 EN 10088 (AISI 304) | Stainless Steel 1.4404 EN 10088 (AISI 316L) |
| Impeller | Chrome-nickel steel 1.4301 EN 10088 (AISI 304) | Stainless Steel 1.4404 EN 10088 (AISI 316L) |
| Lower cover | Chrome-nickel steel 1.4301 EN 10088 (AISI 304) | Stainless Steel 1.4404 EN 10088 (AISI 316L) |
| Upper cover | Chrome-nickel steel 1.4301 EN 10088 (AISI 304) | Stainless Steel 1.4404 EN 10088 (AISI 316L) |
| Spacer sleeve | Chrome-nickel steel 1.4301 EN 10088 (AISI 304) | Stainless Steel 1.4404 EN 10088 (AISI 316L) |
| Shaft | Chrome-nickel steel 1.4301 EN 10088 (AISI 304) | Stainless Steel 1.4404 EN 10088 (AISI 316L) |
| Plug | Chrome-nickel steel 1.4301 EN 10088 (AISI 304) | Stainless Steel 1.4404 EN 10088 (AISI 316L) |
| Bearing bushing / Bearing in stage body | Corrosion-resistant carbide / Ceramic | Corrosion-resistant carbide / Ceramic |
| Mechanical seal ISO 3069 - KU | Hard metal/Carbon/EPDM | Hard metal/Carbon/EPDM |
| Wear ring | PPS | PPS |
| O-ring | EPDM | EPDM |
| Oval Counterflanges | Stainless Steel AISI 304 (galvanized steel for MXV 50 O) | Stainless Steel 1.4404 EN 10088 (AISI 316L) |
| Counterflanges (on request) | Stainless Steel AISI 304 (Steel Fe 430B for MXV 50) | Stainless Steel 1.4404 EN 10088 (AISI 316L) |

## MXV(L) 65, 80, 100

MXV: Internal parts in contact with the liquid in chrome-nickel stainless steel AISI 304 with pump casing and upper cover in cast iron.
MXVL: Internal parts in contact with the liquid with pump casing and upper cover in chrome-nickel-molybdenum stainless steel AISI 316L.

| Components | Materials MXV | Materials MXVL |
|---|---|---|
| Pump casing | Cast iron GJL 250 EN 1561 | Stainless Steel 1.4404 EN 10088 (AISI 316L) |
| Upper cover | Cast iron GJL 250 EN 1561 | Stainless Steel 1.4404 EN 10088 (AISI 316L) |
| External jacket | Chrome-nickel steel 1.4301 EN 10088 (AISI 304) | Stainless Steel 1.4404 EN 10088 (AISI 316L) |
| Stage casing | Chrome-nickel steel 1.4301 EN 10088 (AISI 304) | Stainless Steel 1.4404 EN 10088 (AISI 316L) |
| Impeller | Chrome-nickel steel 1.4301 EN 10088 (AISI 304) | Stainless Steel 1.4404 EN 10088 (AISI 316L) |
| Spacer sleeve | Chrome-nickel steel 1.4301 EN 10088 (AISI 304) | Stainless Steel 1.4404 EN 10088 (AISI 316L) |
| Shaft | Stainless Steel 1.4305 EN 10088 (AISI 303), (AISI 431 for MXV 100) | Stainless Steel 1.4404 EN 10088 (AISI 316L), (AISI 329 for MXVL 100 |
| Plug | Stainless Steel 1.4404 EN 10088 (AISI 316L), (AISI 304 for MXVL 100 | Stainless Steel 1.4404 EN 10088 (AISI 316L) |
| Bearing sleeve | Corrosion-resistant, cemented carbide | Corrosion-resistant, cemented carbide |
| Bearing in stage casing | Ceramic alumina (Corrosion-resistant, cemented carbide for MXV 100) | Ceramic alumina (Corrosion-resistant, cemented carbide for MXV 100) |
| Mechanical seal ISO 3069 - KU | Hard metal/Carbon/EPDM | Hard metal/Carbon/EPDM |
| Wear ring | PTFE | PTFE |
| O-ring | EPDM | EPDM |
| Counterflanges (on request) | Steel 1.0044 EN 10025-2 (Fe 430B) | on request |

MXV

calpeda

## EI: Pumps with frequency converter

The MXV EI pumps are available with power from 0,75 kW up to 22 kW, the pumps are equipped with I-MAT installed on board.
Which allows to realize a variable-speed system extremely compact and efficient, ideal in applications of water supply and in the distribution of hot and cold water.
The pump is equipped with transducers suitable for operation and is already programmed at the factory.

### Features

- Energy saving
- Compact design
- Easy to use
- Programmable to suit the system requirements
- Reliability

### Construction

- The system consists of:
- Pump
- Induction motor
- I-MAT Frequency converter
- Motor adapter for the motor mounting of the frequency converter
- Connection cable between frequency converter and induction motor
- Transducers

### Main features

Rated motor power output from 0,75 kW to 22 kW
Control range from 1750 to 2900 rpm (2-pole)
Protection against dry running
Protection against operations with closed valve ports
Protection against  system leakages
Protection against overcurrent in the motor
Protection agains overvoltage and undervoltage of the power supply
Protection against current unbalances between phases

### Operating modes

**Constant pressure mode**
with pressure transducer
In this mode, the system maintains the preset pressure when the flow required by the installation changes.

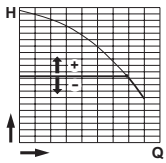


**Proportional pressure mode**
with pressure transducer
In this mode the system changes the working pressure according to the required flow rate.

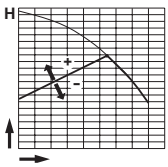


**Constant flow mode**
with flow meter
In this mode the system maintains a constant flow rate value in a point of the installation according to the required pressure.

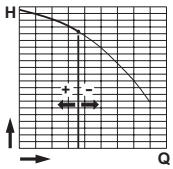


**Fixed speed mode**
with setting of the speed preferential rotation.
In this mode, by changing the working frequency, you may choose any operational curve included within the working range.

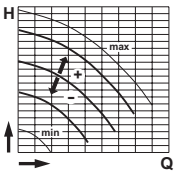


**Constant temperature mode**
with temperature transducer
In this mode the system keeps the temperature constant inside a system by changing the speed of the pump.

MXV

calpeda

## Variants

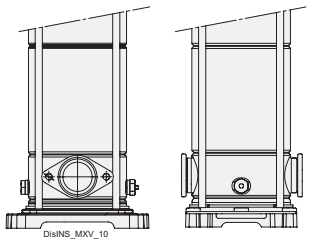


Oval flange
only for MXV 25,32,40,50.

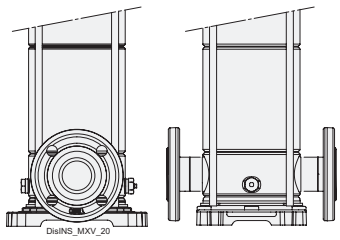


Counterflanges

## Installation

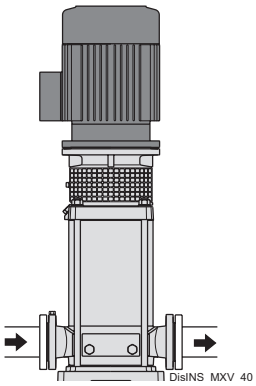


Vertical installation (Standard).

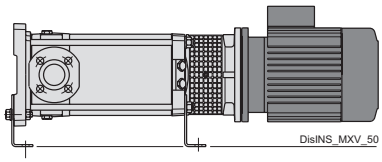


Horizontal installation.

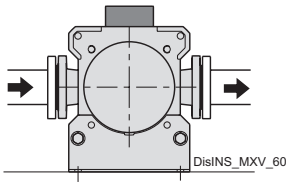


Variant H1: suction on the left, delivery on the right.

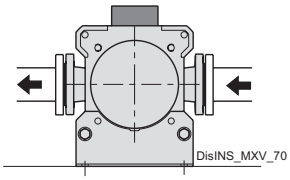


Variant H2: suction on the right, delivery on the left.

## Variable parts

| Pump size MXV | | | Number of stages | Stage casings with bearing |
|---|---|---|---|---|
| 25 - 304 | 32 - 504 | 40 - 904 | 4 | 1 |
| 25 - 305 | 32 - 505 | 40 - 905 | 5 | 1 |
| 25 - 306 | 32 - 506 | 40 - 906 | 6 | 1 |
| 25 - 307 | 32 - 507 | 40 - 907 | 7 | 1 |
| 25 - 308 | 32 - 508 | 40 - 908 | 8 | 1 |
| 25 - 310 | 32 - 510 | 40 - 910 | 10 | 1 |
| | | 40 - 911 | 11 | 2 |
| 25 - 312 | 32 - 512 | | 12 | 2 |
| | | 40 - 913 | 13 | 2 |
| 25 -314 | 32 - 514 | | 14 | 2 |
| | | 40 - 915 | 15 | 2 |
| 25 - 316 | 32 - 516 | | 16 | 2 |
| 25 - 318 | 32 - 518 | | 18 | 2 |
| | | 40 - 917 | 17 | 3 |
| | | 40 - 919 | 19 | 3 |
| 25 - 320 | | | 20 | 3 |

| Pump size MXV | | | | Number of stages | Stage casings with bearing |
|---|---|---|---|---|---|
| 50 - 1501 | 50 - 2001 | | 80 - 4801 | 1 | 1 |
| 50 - 1502 | 50 - 2002 | 65 - 3202 | 80 - 4802 | 2 | 1 |
| 50 - 1503 | 50 - 2003 | 65 - 3203 | 80 - 4803 | 3 | 1 |
| 50 - 1504 | 50 - 2004 | 65 - 3204 | 80 - 4804 | 4 | 1 |
| 50 - 1505 | 50 - 2005 | 65 - 3205 | 80 - 4805 | 5 | 1 |
| 50 - 1506 | 50 - 2006 | 65 - 3206 | | 6 | 1 |
| 50 - 1507 | 50 - 2007 | 65 - 3207 | | 7 | 1 |
| 50 - 1508 | 50 - 2008 | | | 8 | 1 |
| | | | 80 - 4806 | 6 | 2 |
| | | | 80 - 4807 | 7 | 2 |
| | | 65 - 3208 | 80 - 4808 | 8 | 2 |
| 50 - 1509 | 50 - 2009 | 65 - 3209 | | 9 | 2 |
| 50 - 1510 | 50 - 2010 | 65 - 3210 | | 10 | 2 |
| 50 - 1511 | 50 - 2011 | | | 11 | 2 |
| 50 - 1512 | 50 - 2012 | 65 - 3212 | | 12 | 2 |
| 50 - 1513 | 50 - 2013 | | | 13 | 2 |
| 50 - 1514 | 50 - 2014 | | | 14 | 3 |
| 50 - 1515 | 50 - 2015 | | | 15 | 3 |
| 50 - 1516 | 50 - 2016 | | | 16 | 3 |
| 50 - 1517 | 50 - 2017 | | | 17 | 3 |

MXV

calpeda®

## Coverage chart n ≈ 2900 rpm

### Three-phase

| | | | | Q = Flow | | | | | | | | | |
|---|---|---|---|---|---|---|---|---|---|---|---|---|---|
| | | | | m³/h | 0 | 1 | 1,5 | 2 | 2,5 | 3 | 3,5 | 4 | 4,5 |
| Model | | P2 | | l/min | | 16,6 | 25 | 33,3 | 41,6 | 50 | 58,3 | 66,6 | 75 |
| | | kW | HP | H (m) = Total head | | | | | | | | | |
| MXVL | MXV 25-304 | 0,75 | 1 | | 44 | 42,5 | 40 | 37,5 | 34,5 | 31 | 27 | 22,5 | 17 |
| MXVL | MXV 25-305 | 0,75 | 1 | | 56 | 53 | 50 | 47 | 43 | 39 | 34 | 28 | 21 |
| MXVL | MXV 25-306 | 1,1 | 1,5 | | 68 | 63,5 | 60,5 | 56 | 51,5 | 46,5 | 40,5 | 34 | 25 |
| MXVL | MXV 25-307 | 1,1 | 1,5 | | 79,5 | 74 | 70,5 | 65,5 | 60 | 54,5 | 47,5 | 39,5 | 30 |
| MXVL | MXV 25-308 | 1,5 | 2 | | 91 | 85 | 80,5 | 75 | 69 | 62 | 54 | 45,5 | 34 |
| MXVL | MXV 25-310 | 1,5 | 2 | | 114 | 106 | 101 | 94 | 86 | 78 | 68 | 57 | 42 |
| MXVL | MXV 25-312 | 2,2 | 3 | | 136 | 127 | 121 | 112 | 103 | 93,5 | 81,5 | 68 | 51 |
| MXVL | MXV 25-314 | 2,2 | 3 | | 159 | 149 | 141 | 131 | 121 | 109 | 95 | 79,5 | 59 |
| MXVL | MXV 25-316 | 3 | 4 | | 182 | 170 | 161 | 150 | 138 | 124 | 108 | 91 | 68 |
| MXVL | MXV 25-318 | 3 | 4 | | 205 | 191 | 181 | 169 | 155 | 140 | 122 | 102 | 76 |
| MXVL | MXV 25-320 | 3 | 4 | | 228 | 213 | 202 | 188 | 173 | 156 | 136 | 114 | 85 |

### Three-phase

| | | | | Q = Flow | | | | | | | | | |
|---|---|---|---|---|---|---|---|---|---|---|---|---|---|
| | | | | m³/h | 0 | 2,5 | 3 | 3,5 | 4 | 4,5 | 5 | 6 | 7 | 8 |
| Model | | P2 | | l/min | | 41,6 | 50 | 58,3 | 66,6 | 75 | 83,3 | 100 | 117 | 133 |
| | | kW | HP | H (m) = Total head | | | | | | | | | | |
| MXVL | MXV 32-504 | 1,1 | 1,5 | | 45 | 41,5 | 40 | 38,5 | 36,5 | 34,5 | 32,5 | 27,5 | 22 | 14,5 |
| MXVL | MXV 32-505 | 1,1 | 1,5 | | 56 | 51,5 | 50 | 48 | 46 | 43,5 | 41 | 34,5 | 27,5 | 18,5 |
| MXVL | MXV 32-506 | 1,5 | 2 | | 68 | 62 | 60 | 58 | 55,5 | 52,5 | 49,5 | 42 | 33,5 | 22,5 |
| MXVL | MXV 32-507 | 1,5 | 2 | | 79,5 | 72,5 | 70,5 | 68 | 65 | 61,5 | 58 | 49 | 39 | 26,5 |
| MXVL | MXV 32-508 | 2,2 | 3 | | 91 | 83 | 80,5 | 78 | 74 | 70 | 66 | 56 | 44,5 | 30 |
| MXVL | MXV 32-510 | 2,2 | 3 | | 114 | 104 | 101 | 97,5 | 93 | 88 | 83 | 70 | 56 | 38 |
| MXVL | MXV 32-512 | 3 | 4 | | 136 | 124 | 121 | 117 | 111 | 105 | 99,5 | 84 | 67 | 45,5 |
| MXVL | MXV 32-514 | 3 | 4 | | 159 | 145 | 141 | 136 | 130 | 123 | 116 | 98 | 78 | 53 |
| MXVL | MXV 32-516 | 4 | 5,5 | | 182 | 166 | 161 | 156 | 148 | 140 | 132 | 112 | 89,5 | 60,5 |
| MXVL | MXV 32-518 | 4 | 5,5 | | 205 | 187 | 181 | 175 | 167 | 158 | 149 | 126 | 100 | 68 |

### Three-phase

| | | | | Q = Flow | | | | | | | | | | |
|---|---|---|---|---|---|---|---|---|---|---|---|---|---|---|
| | | | | m³/h | 0 | 5 | 6 | 7 | 8 | 9 | 10 | 11 | 12 | 13 |
| Model | | P2 | | l/min | | 83,3 | 100 | 117 | 133 | 150 | 167 | 183 | 200 | 217 |
| | | kW | HP | H (m) = Total head | | | | | | | | | | |
| MXVL | MXV 40-904 | 1,5 | 2 | | 47 | 43 | 42 | 41 | 40 | 37 | 34 | 30 | 26 | 21 |
| MXVL | MXV 40-905 | 2,2 | 3 | | 59 | 54 | 53 | 51 | 50 | 47 | 43 | 38 | 32 | 26 |
| MXVL | MXV 40-906 | 2,2 | 3 | | 71 | 65 | 63 | 62 | 59 | 56 | 51 | 45 | 39 | 31 |
| MXVL | MXV 40-907 | 3 | 4 | | 83 | 76 | 74 | 72 | 69 | 66 | 60 | 53 | 45 | 36 |
| MXVL | MXV 40-908 | 3 | 4 | | 95 | 87 | 85 | 82 | 79 | 75 | 69 | 60 | 51 | 42 |
| MXVL | MXV 40-910 | 4 | 5,5 | | 119 | 109 | 106 | 103 | 99 | 94 | 86 | 75 | 64 | 52 |
| MXVL | MXV 40-911 | 4 | 5,5 | | 131 | 119 | 116 | 113 | 109 | 103 | 94 | 83 | 71 | 57 |
| MXVL | MXV 40-913 | 5,5 | 7,5 | | 155 | 141 | 138 | 134 | 129 | 122 | 111 | 98 | 84 | 68 |
| MXVL | MXV 40-915 | 5,5 | 7,5 | | 179 | 163 | 159 | 154 | 149 | 141 | 128 | 113 | 96 | 78 |
| MXVL | MXV 40-917 | 7,5 | 10 | | 202 | 184 | 180 | 175 | 168 | 159 | 145 | 128 | 109 | 89 |
| MXVL | MXV 40-919 | 7,5 | 10 | | 226 | 206 | 201 | 195 | 188 | 178 | 162 | 143 | 122 | 99 |

MXV

calpeda®

## Coverage chart n ≈ 2900 rpm

### Data also valid for MXVL (1.4401 EN 10088 (AISI 316))

### Three-phase

| | | | | Q = Flow | | | | | | | | | | | | |
|---|---|---|---|---|---|---|---|---|---|---|---|---|---|---|---|---|
| | | | | m³/h | 0 | 8 | 10 | 12 | 14 | 16 | 18 | 20 | 22 | 24 | 26 | 28 |
| Model | | P2 | | l/min | | 133 | 167 | 200 | 233 | 267 | 300 | 333 | 367 | 400 | 433 | 466 |
| | | kW | HP | H (m) = Total head | | | | | | | | | | | | |
| MXVL | MXV 50-1501 | 1,1 | 1,5 | | 14 | 12 | 11,6 | 11 | 10,3 | 9,5 | 8,4 | 7 | 5,5 | 3,6 | - | - |
| MXVL | MXV 50-1502 | 1,5 | 2 | | 27,9 | 24,6 | 23,8 | 22,7 | 21,4 | 19,8 | 17,8 | 15,4 | 12,7 | 9,5 | - | - |
| MXVL | MXV 50-1503/A | 2,2 | 3 | | 43,6 | 38,6 | 37,3 | 35,8 | 33,9 | 31,5 | 28,6 | 25,1 | 21 | 16,3 | - | - |
| MXVL | MXV 50-1504 | 3 | 4 | | 58 | 52 | 50,5 | 48,5 | 46 | 43 | 39,5 | 35 | 30 | 24 | - | - |
| MXVL | MXV 50-1505 | 4 | 5,5 | | 72,5 | 65 | 63 | 60,5 | 57,5 | 54 | 49,5 | 44 | 37,5 | 30 | - | - |
| MXVL | MXV 50-1506 | 5,5 | 7,5 | | 85 | 78 | 75,5 | 72 | 68 | 63 | 57,5 | 50,5 | 42,5 | 33,5 | - | - |
| MXVL | MXV 50-1507 | 5,5 | 7,5 | | 99 | 91,5 | 88 | 84 | 79,5 | 73,5 | 67 | 59 | 49,5 | 39 | - | - |
| MXVL | MXV 50-1508/A | 5,5 | 7,5 | | 115 | 105 | 101 | 97 | 92 | 86 | 78 | 69 | 58 | 45 | - | - |
| MXVL | MXV 50-1509 | 7,5 | 10 | | 129 | 118 | 114 | 110 | 104 | 97 | 88 | 77 | 65 | 51 | - | - |
| MXVL | MXV 50-1510 | 7,5 | 10 | | 141 | 130 | 126 | 121 | 114 | 105 | 95 | 83 | 69 | 54 | - | - |
| MXVL | MXV 50-1511 | 9,2 | 12,5 | | 155 | 143 | 138 | 133 | 125 | 116 | 105 | 91 | 76 | 59 | - | - |
| MXVL | MXV 50-1512 | 9,2 | 12,5 | | 173 | 159 | 155 | 149 | 141 | 132 | 121 | 107 | 91 | 72 | - | - |
| MXVL | MXV 50-1513 | 11 | 15 | | 188 | 173 | 167 | 161 | 153 | 143 | 131 | 116 | 98 | 78 | - | - |
| MXVL | MXV 50-1514 | 11 | 15 | | 202 | 186 | 180 | 173 | 165 | 154 | 141 | 125 | 106 | 84 | - | - |
| MXVL | MXV 50-1515 | 11 | 15 | | 217 | 199 | 193 | 186 | 177 | 165 | 151 | 134 | 113 | 90 | - | - |
| MXVL | MXV 50-1516 | 15 | 20 | | 230 | 211 | 204 | 196 | 186 | 174 | 159 | 140 | 119 | 94 | - | - |
| MXVL | MXV 50-1517 | 15 | 20 | | 245 | 224 | 217 | 209 | 198 | 185 | 169 | 149 | 126 | 100 | - | - |
| MXVL | MXV 50-2001 | 1,1 | 1,5 | | 15,5 | - | 13 | 12,6 | 12,1 | 11,5 | 10,7 | 9,8 | 8,7 | 7,3 | 5,8 | 4 |
| MXVL | MXV 50-2002 | 2,2 | 3 | | 30,7 | - | 27 | 26,3 | 25,5 | 24,5 | 23,3 | 21,7 | 19,8 | 17,5 | 14,7 | 11,7 |
| MXVL | MXV 50-2003 | 3 | 4 | | 46,5 | - | 41,4 | 40,4 | 39,1 | 37,5 | 35,4 | 32,9 | 30 | 26,5 | 22,5 | 18 |
| MXVL | MXV 50-2004 | 4 | 5,5 | | 62,5 | - | 56 | 54,5 | 53 | 51 | 48,5 | 45,5 | 42 | 37,5 | 32 | 26 |
| MXVL | MXV 50-2005 | 5,5 | 7,5 | | 78 | - | 70 | 68 | 66 | 64 | 61 | 57 | 52,5 | 46,5 | 40 | 32,5 |
| MXVL | MXV 50-2006 | 7,5 | 10 | | 92 | - | 84 | 82 | 79,5 | 76,5 | 73 | 68,5 | 62,5 | 55,5 | 47 | 37,5 |
| MXVL | MXV 50-2007 | 7,5 | 10 | | 107 | - | 98 | 95,5 | 93 | 89,5 | 85 | 80 | 73 | 64,5 | 55 | 44 |
| MXVL | MXV 50-2008 | 9,2 | 12,5 | | 122 | - | 112 | 109 | 106 | 102 | 97 | 91 | 83 | 74 | 63 | 50 |
| MXVL | MXV 50-2009 | 9,2 | 12,5 | | 142 | - | 130 | 127 | 124 | 120 | 114 | 108 | 100 | 89 | 77 | 63 |
| MXVL | MXV 50-2010 | 11 | 15 | | 158 | - | 144 | 141 | 137 | 133 | 127 | 120 | 111 | 99 | 86 | 71 |
| MXVL | MXV 50-2011 | 11 | 15 | | 173 | - | 159 | 155 | 151 | 146 | 140 | 132 | 122 | 109 | 94 | 78 |
| MXVL | MXV 50-2012 | 15 | 20 | | 188 | - | 172 | 168 | 164 | 158 | 151 | 143 | 132 | 118 | 103 | 84 |
| MXVL | MXV 50-2013 | 15 | 20 | | 204 | - | 186 | 182 | 177 | 171 | 164 | 154 | 143 | 128 | 111 | 91 |
| MXVL | MXV 50-2014 | 15 | 20 | | 219 | - | 201 | 196 | 191 | 185 | 177 | 166 | 154 | 138 | 120 | 99 |
| MXVL | MXV 50-2015 | 15 | 20 | | 235 | - | 215 | 210 | 205 | 198 | 189 | 178 | 165 | 148 | 128 | 106 |
| MXVL | MXV 50-2016 | 18,5 | 25 | | 251 | - | 232 | 227 | 221 | 214 | 205 | 193 | 179 | 161 | 140 | 116 |
| MXVL | MXV 50-2017 | 18,5 | 25 | | 267 | - | 246 | 241 | 235 | 227 | 217 | 205 | 190 | 172 | 149 | 124 |

### Three-phase

| | | | | Q = Flow | | | | | | | | | | |
|---|---|---|---|---|---|---|---|---|---|---|---|---|---|---|
| | | | | m³/h | 0 | 15 | 21 | 24 | 27 | 30 | 33 | 36 | 39 | 44 |
| Model | | P2 | | l/min | | 250 | 350 | 400 | 450 | 500 | 550 | 600 | 650 | 733 |
| | | kW | HP | H (m) = Total head | | | | | | | | | | |
| MXVL | MXV 65-3202/D | 4 | 5,5 | | 37 | 34 | 32 | 31 | 30 | 29 | 27 | 24,5 | 22 | 17 |
| MXVL | MXV 65-3203/C | 5,5 | 7,5 | | 55,5 | 51 | 49 | 47,5 | 46 | 43,5 | 40,5 | 37 | 33,5 | 25,5 |
| MXVL | MXV 65-3204/C | 7,5 | 10 | | 75 | 69 | 65,5 | 63,5 | 61 | 58,5 | 54,5 | 50 | 45 | 35 |
| MXVL | MXV 65-3205/D | 11 | 15 | | 93,5 | 86 | 82 | 79,5 | 77 | 73 | 68 | 62,5 | 56,5 | 44 |
| MXVL | MXV 65-3206/D | 11 | 15 | | 112 | 103 | 98,5 | 95,5 | 92 | 87 | 82 | 75 | 67,5 | 52,5 |
| MXVL | MXV 65-3207/D | 15 | 20 | | 131 | 121 | 115 | 111 | 107 | 102 | 95,5 | 87,5 | 79 | 61,5 |
| MXVL | MXV 65-3208/D | 15 | 20 | | 150 | 138 | 131 | 127 | 123 | 116 | 109 | 100 | 90 | 70 |
| MXVL | MXV 65-3209/E | 18,5 | 25 | | 168 | 155 | 148 | 143 | 138 | 130 | 122 | 112 | 101 | 79 |
| MXVL | MXV 65-3210/E | 18,5 | 25 | | 187 | 172 | 164 | 159 | 154 | 145 | 136 | 125 | 112 | 87,5 |
| MXVL | MXV 65-3212/D | 22 | 30 | | 225 | 207 | 197 | 191 | 185 | 174 | 163 | 150 | 135 | 105 |

MXV

calpeda®

## Coverage chart n ≈ 2900 rpm

### Data also valid for MXVL (1.4401 EN 10088 (AISI 316))

### Three-phase

| | | | | Q = Flow | | | | | | | | | | |
|---|---|---|---|---|---|---|---|---|---|---|---|---|---|---|
| | | | | m³/h | 0 | 21 | 27 | 33 | 39 | 45 | 48 | 51 | 54 | 60 |
| Model | | P2 | | l/min | | 350 | 450 | 550 | 650 | 750 | 800 | 850 | 900 | 1000 |
| | | kW | HP | H (m) = Total head | | | | | | | | | | |
| MXVL | MXV 80-4801/D | 4 | 5,5 | | 20 | 18 | 17 | 16 | 15 | 13 | 12 | 10,7 | 9,5 | 7 |
| MXVL | MXV 80-4802/C | 5,5 | 7,5 | | 40,5 | 36 | 34,5 | 32,5 | 29,5 | 26,5 | 24,5 | 22 | 20 | 15,5 |
| MXVL | MXV 80-4803/C | 7,5 | 10 | | 61 | 54 | 51 | 48 | 44 | 40 | 37 | 34 | 31 | 24,5 |
| MXVL | MXV 80-4804/D | 11 | 15 | | 81 | 72 | 69 | 65 | 60 | 55 | 51,5 | 48 | 44 | 35 |
| MXVL | MXV 80-4805/D | 15 | 20 | | 101 | 90 | 86 | 81 | 75 | 68,5 | 64,5 | 60 | 55 | 44 |
| MXVL | MXV 80-4806/D | 15 | 20 | | 121 | 108 | 103 | 97 | 90 | 82 | 77,5 | 72 | 66 | 53 |
| MXVL | MXV 80-4807/E | 18,5 | 25 | | 142 | 126 | 120 | 113 | 105 | 96 | 90 | 84 | 77 | 61,5 |
| MXVL | MXV 80-4808/D | 22 | 30 | | 162 | 144 | 137 | 129 | 120 | 109 | 103 | 96 | 88 | 70,5 |

### Three-phase

| | | | | Q = Flow | | | | | | | | | |
|---|---|---|---|---|---|---|---|---|---|---|---|---|---|
| | | | | m³/h | 0 | 30 | 40 | 45 | 50 | 60 | 70 | 80 | 88 |
| Model | | P2 | | l/min | | 500 | 667 | 750 | 833 | 1000 | 1167 | 1333 | 1466 |
| | | kW | HP | H (m) = Total head | | | | | | | | | |
| MXVL | MXV 100-6501/A | 5,5 | 7,5 | | 30,2 | 24,8 | 23 | 22,3 | 21,7 | 20,3 | 18,3 | 15,4 | 12,2 |
| MXVL | MXV 100-6502-2R/A | 7,5 | 10 | | 38,9 | 37,2 | 35,8 | 34,8 | 33,8 | 30,5 | 25,8 | 20,3 | 14,6 |
| MXVL | MXV 100-6502/A | 11 | 15 | | 59,3 | 51,2 | 48 | 46,8 | 45,5 | 43,2 | 39,9 | 35,3 | 30,8 |
| MXVL | MXV 100-6503-2R/A | 15 | 20 | | 67,3 | 63 | 60,6 | 59,1 | 57,6 | 53,4 | 47,2 | 39,5 | 31,4 |
| MXVL | MXV 100-6503/B | 18,5 | 25 | | 89,6 | 77,6 | 72,8 | 70,9 | 69 | 65,7 | 60,7 | 53,9 | 47,2 |
| MXVL | MXV 100-6504-2R/B | 18,5 | 25 | | 95,5 | 88,6 | 85,1 | 83,2 | 81,1 | 76 | 68,3 | 58,5 | 47,9 |
| MXVL | MXV 100-6504/A | 22 | 30 | | 111,8 | 100,8 | 96,7 | 94,5 | 92,4 | 88,4 | 82,3 | 73,3 | 62,9 |
| MXVL | MXV 100-6505-2R/A | 30 | 40 | | 125,3 | 116,2 | 111,8 | 109,5 | 107 | 101,1 | 92,1 | 80,4 | 68 |
| MXVL | MXV 100-6505/A | 30 | 40 | | 142,4 | 129,2 | 124 | 121,5 | 119 | 114,1 | 106,9 | 96,3 | 84,6 |
| MXVL | MXV 100-6506-2R/A | 30 | 40 | | 153,5 | 141,6 | 136,2 | 133,3 | 130,3 | 123,4 | 112,9 | 99 | 84,1 |
| MXVL | MXV 100-6506/A | 37 | 50 | | 170,6 | 154,7 | 148,5 | 145,4 | 142,3 | 136,5 | 127,8 | 115 | 100,9 |
| MXVL | MXV 100-6507-2R/A | 37 | 50 | | 181,7 | 167 | 160,6 | 157,2 | 153,6 | 145,7 | 133,7 | 117,7 | 100,3 |
| MXVL | MXV 100-6507/A | 45 | 60 | | 199,5 | 181,1 | 173,8 | 170,3 | 166,7 | 160 | 149,9 | 135,1 | 118,9 |
| MXVL | MXV 100-6508-2R/A | 45 | 60 | | 210,6 | 193,5 | 186 | 182,2 | 178,1 | 169,3 | 156 | 137,9 | 118,4 |
| MXVL | MXV 100-6508/A | 45 | 60 | | 227,7 | 206,5 | 198,2 | 194,1 | 190,1 | 182,3 | 170,7 | 153,8 | 135,1 |

### Three-phase

| | | | | Q = Flow | | | | | | | | | |
|---|---|---|---|---|---|---|---|---|---|---|---|---|---|
| | | | | m³/h | 0 | 45 | 50 | 60 | 70 | 80 | 88 | 100 | 110 | 115 |
| Model | | P2 | | l/min | | 750 | 833 | 1000 | 1167 | 1333 | 1466 | 1667 | 1833 | 1916 |
| | | kW | HP | H (m) = Total head | | | | | | | | | | |
| MXVL | MXV 100-9001-1R/A | 5,5 | 7,5 | | 26,4 | 20,5 | 19,9 | 18,7 | 17,3 | 15,5 | 13,2 | 9,5 | 5,7 | 3,5 |
| MXVL | MXV 100-9001/A | 7,5 | 10 | | 35,6 | 27 | 25,6 | 23,2 | 21,9 | 20,4 | 18,8 | 15,7 | 12,4 | 10,5 |
| MXVL | MXV 100-9002-2R/A | 11 | 15 | | 49,6 | 42,4 | 41,3 | 39 | 36,6 | 33,2 | 29,4 | 22,7 | 15,7 | 11,7 |
| MXVL | MXV 100-9002/A | 15 | 20 | | 69,2 | 56,6 | 54,5 | 50,5 | 47,3 | 44,3 | 41,6 | 36,3 | 30,5 | 27,3 |
| MXVL | MXV 100-9003-2R/B | 18,5 | 25 | | 80,4 | 70,8 | 69,1 | 65,6 | 62,2 | 57,7 | 53 | 44,3 | 34,9 | 30,4 |
| MXVL | MXV 100-9003/A | 22 | 30 | | 92,4 | 82,6 | 80,6 | 76,7 | 73,2 | 69,4 | 65,5 | 57,8 | 49,7 | 45,2 |
| MXVL | MXV 100-9004-2R/A | 30 | 40 | | 113,1 | 100,6 | 98,2 | 93,5 | 89 | 83,5 | 77,5 | 66,5 | 54,6 | 48,5 |
| MXVL | MXV 100-9004/A | 30 | 40 | | 125,6 | 113 | 110,4 | 105,2 | 100,6 | 95,7 | 90,7 | 80,8 | 70,2 | 64,4 |
| MXVL | MXV 100-9005-2R/A | 37 | 50 | | 144,1 | 128,4 | 125,4 | 119,3 | 113,7 | 106,9 | 99,7 | 86,1 | 71,6 | 64,1 |
| MXVL | MXV 100-9005/A | 37 | 50 | | 156,6 | 140,7 | 137,4 | 130,9 | 125,2 | 119,1 | 112,8 | 100,3 | 87,1 | 79,8 |
| MXVL | MXV 100-9006-2R/A | 45 | 60 | | 175,9 | 157 | 153,4 | 146,1 | 139,3 | 131,4 | 122,9 | 107 | 89,8 | 80,8 |
| MXVL | MXV 100-9006/A | 45 | 60 | | 188,4 | 169,5 | 165,6 | 157,8 | 150,9 | 143,6 | 136,2 | 121,3 | 105,5 | 96,7 |

**Test results with clean cold water, without gas content.**
A safety margin of + 0.5 m is recommended for the NPSH value.
Tolerances according to UNI EN ISO 9906:2012
**Head and power values valid for liquids with density ρ = 1,0 kg/dm3 and kinematic viscosity ν = max 20 mm2/sec.** Total head in m
**Pst:** Power with reference to one stage.
**A*:** Calpeda motor currents

## Rated current

### Single-phase

| Model | P2 | | 230V | Weight |
|---|---|---|---|---|
| | kW | HP | A | kg |
| M80 V1-0.75M | 0,75 | 1 | 5,8 | 12.4 |
| M80 V1-1.1M | 1,1 | 1,5 | 7,4 | 13.4 |
| M90 V1-1.5M | 1,5 | 2 | 9,2 | 15.3 |
| M90 V1-1.8M | 1,8 | 2,5 | 11,2 | 18.4 |
| M90 V1-2.2T | 2,2 | 3 | 14,5 | 20 |

### Three-phase

| Model | P2 | | 230V | 400V | 690V | Weight |
|---|---|---|---|---|---|---|
| | kW | HP | A | | | kg |
| M80 V1-0.75T | 0,75 | 1 | 4 | 2,3 | - | 11.7 |
| M80 V1-1.1T/A | 1,1 | 1,5 | 4,6 | 2,7 | - | 13.5 |
| M90 V1-1.5T/A | 1,5 | 2 | 7,5 | 4,3 | - | 15 |
| M90 V1-2.2T/A | 2,2 | 3 | 9,2 | 5,3 | - | 18.1 |
| M90 V1-2.2T | 2,2 | 3 | 9,2 | 5,3 | - | 17.3 |
| M100 V1-3T | 3 | 4 | 11,5 | 6,6 | - | 24.7 |
| M112 V1-4T/A | 4 | 5,5 | - | 9,6 | 5,5 | 28.9 |
| M132 V1-5.5T | 5,5 | 7,5 | - | 10,8 | 6,2 | 42.3 |
| M132 V1-7.5T | 7,5 | 10 | - | 14,3 | 8,3 | 47.5 |
| M160 V1-9.2T | 9,2 | 12,5 | - | 18,5 | 10,7 | 71 |
| M160 V1-11T/A | 11 | 15 | - | 21,5 | 12,4 | 78.2 |
| M160 V1-15T/A | 15 | 20 | - | 27,3 | 15,8 | 97.2 |
| M160 V1-18,5T/B | 18,5 | 25 | - | 34 | 19,6 | 121.7 |
| M180 V1-22T/A | 22 | 30 | - | 41 | 23,7 | 128.1 |

**A*:** Calpeda motor currents

MXV

calpeda®

## Characteristic curves n ≈ 2900 rpm

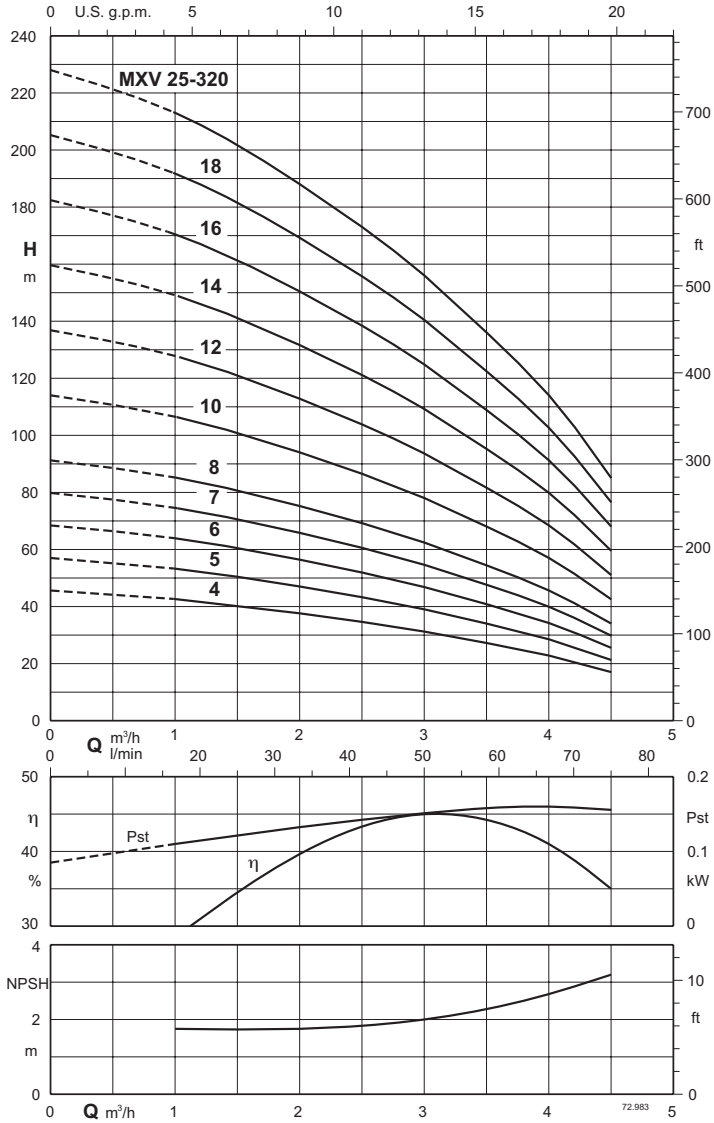


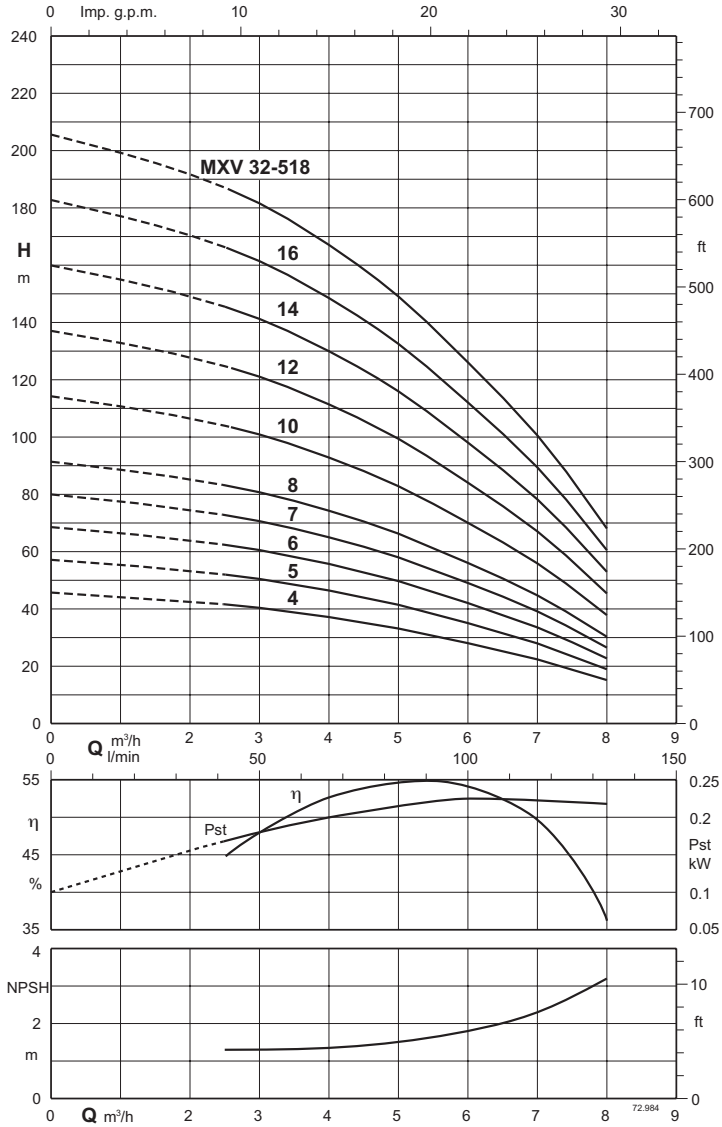


Test results with clean cold water, without gas content.
A safety margin of + 0.5 m is recommended for the NPSH value.
Tolerances in accordance with UNI EN ISO 9906:2012
Head and power values valid for liquids with density ρ = 1,0 kg/dm3 and kinematic viscosity ν = max 20 mm2/sec.
Pst = Power with reference to one stage.
A* Calpeda motor currents

MXV

calpeda®

## Characteristic curves n ≈ 2900 rpm

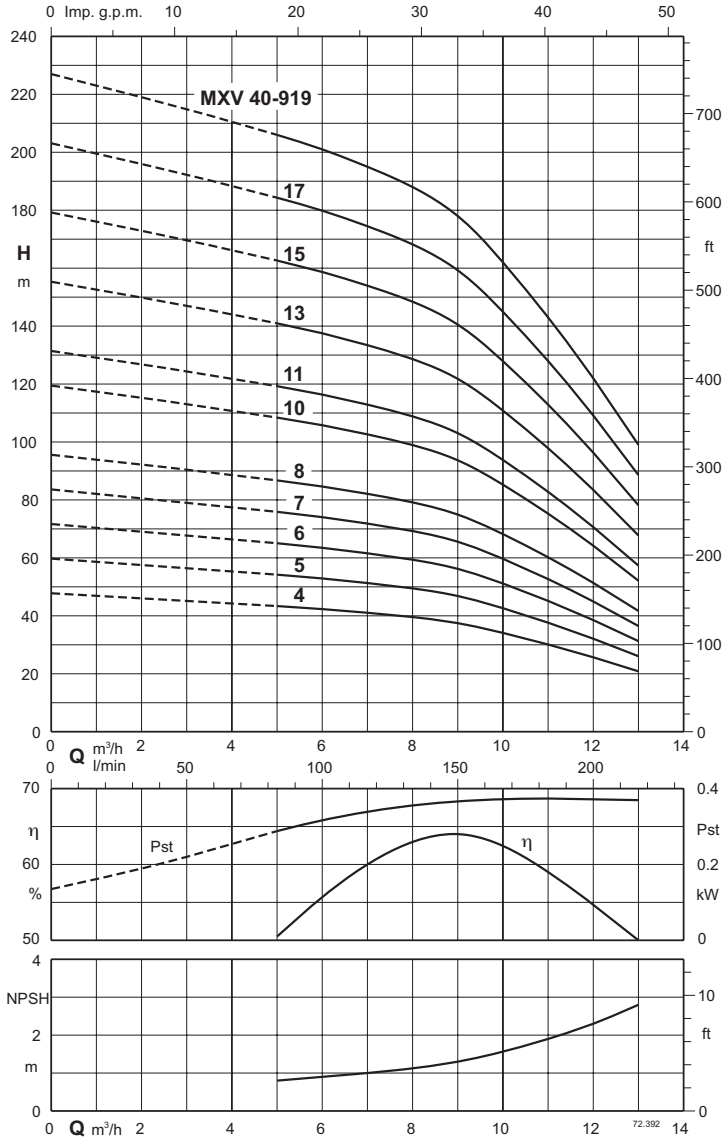


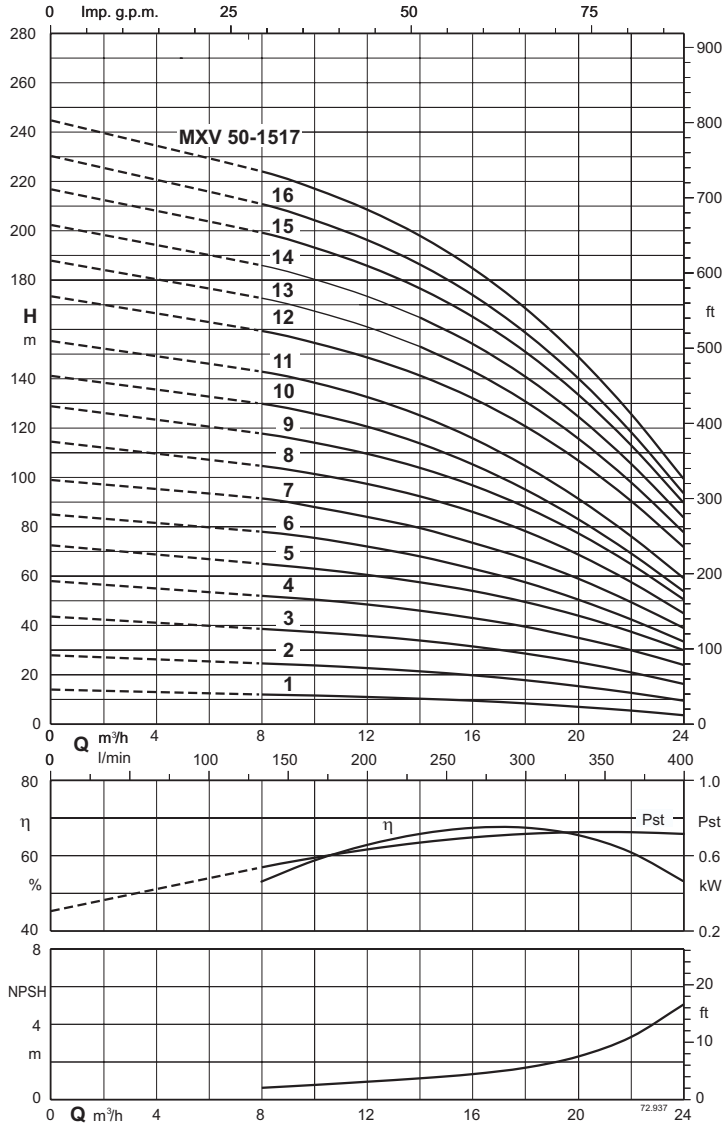


Test results with clean cold water, without gas content.
A safety margin of + 0.5 m is recommended for the NPSH value.
Tolerances in accordance with UNI EN ISO 9906:2012
Head and power values valid for liquids with density ρ = 1,0 kg/dm3 and kinematic viscosity ν = max 20 mm2/sec.
Pst = Power with reference to one stage.
A* Calpeda motor currents

MXV

calpeda®

## Characteristic curves n ≈ 2900 rpm

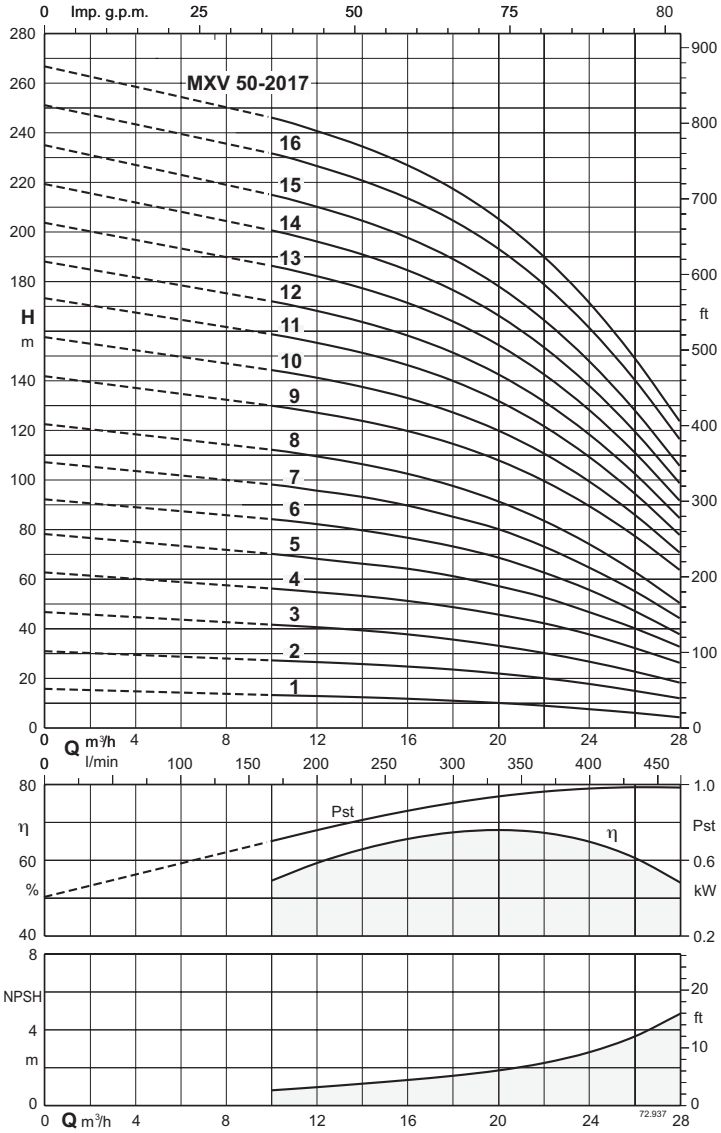


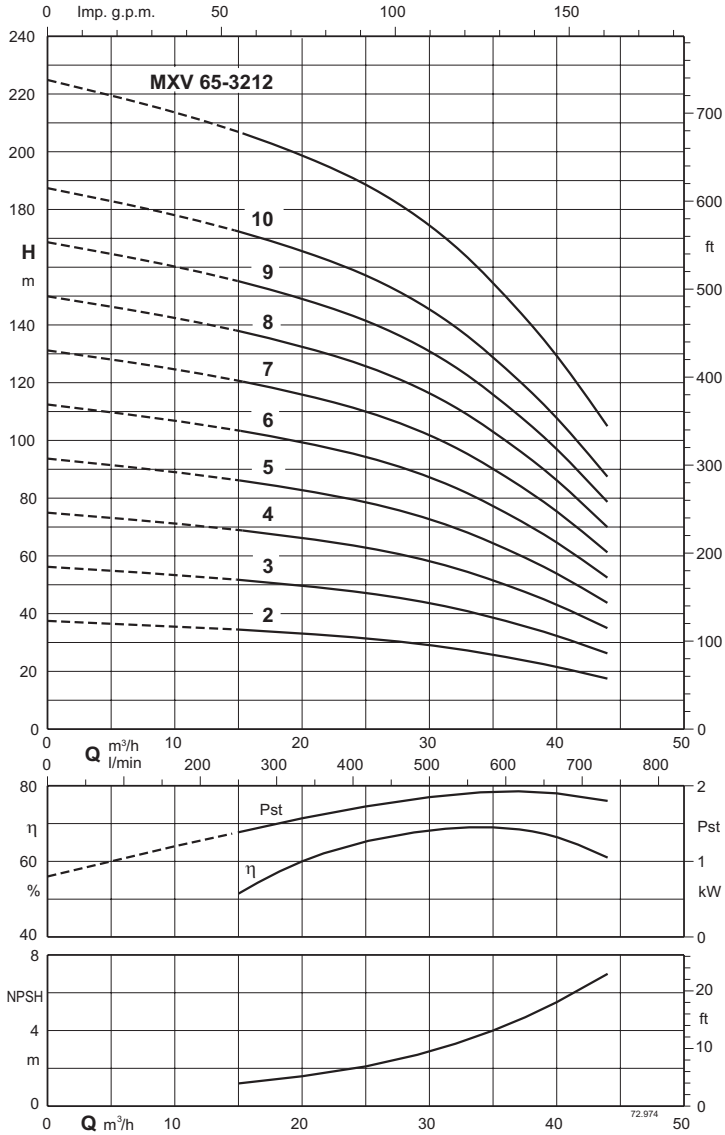


Test results with clean cold water, without gas content.
A safety margin of + 0.5 m is recommended for the NPSH value.
Tolerances in accordance with UNI EN ISO 9906:2012
Head and power values valid for liquids with density ρ = 1,0 kg/dm3 and kinematic viscosity ν = max 20 mm2/sec.
Pst = Power with reference to one stage.
A* Calpeda motor currents

MXV

calpeda®

## Characteristic curves n ≈ 2900 rpm

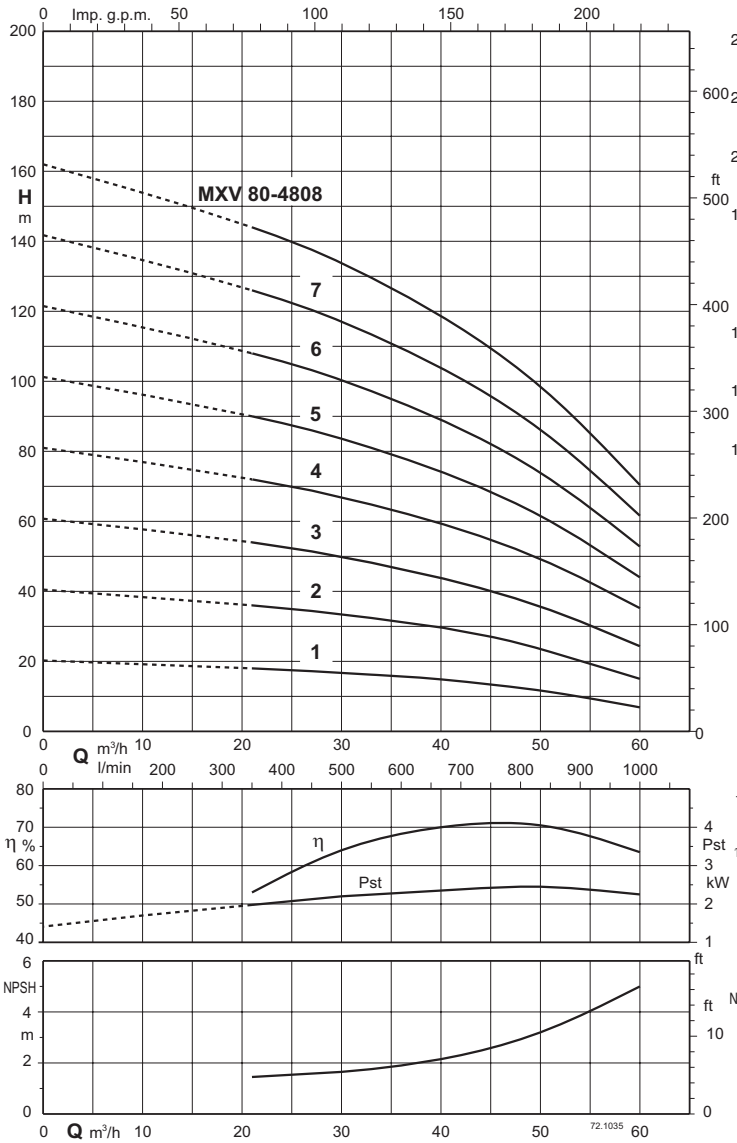


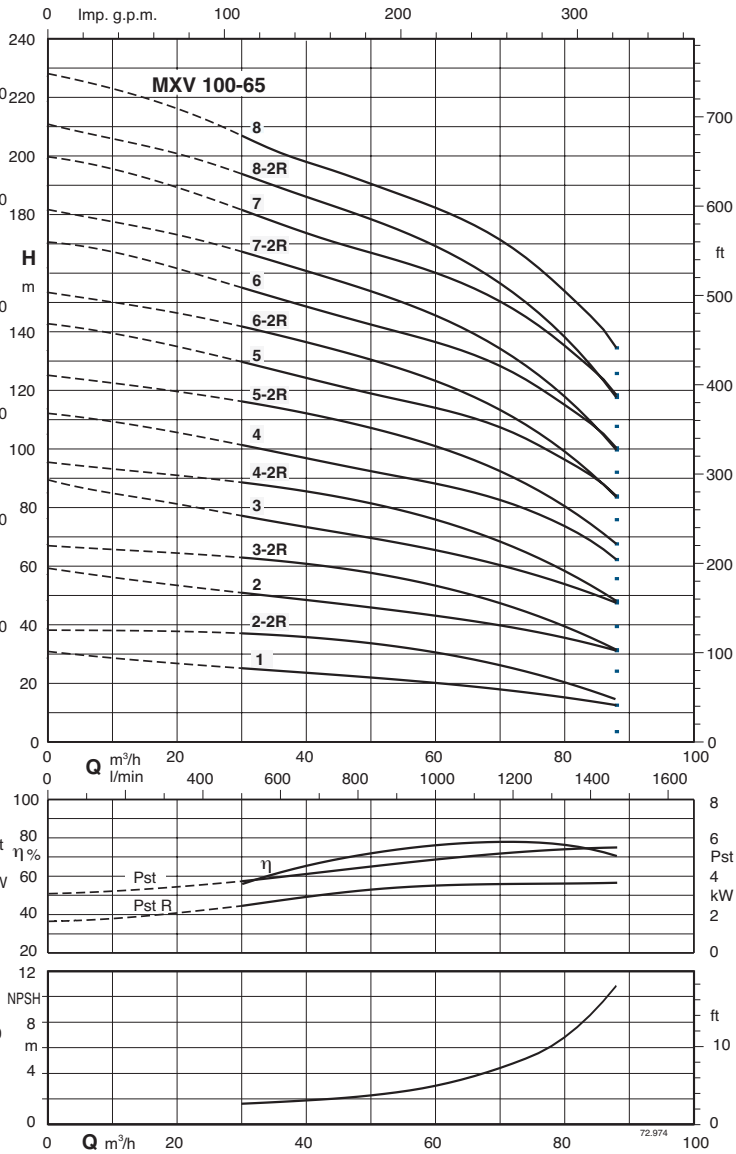


Test results with clean cold water, without gas content.
A safety margin of + 0.5 m is recommended for the NPSH value.
Tolerances in accordance with UNI EN ISO 9906:2012
Head and power values valid for liquids with density ρ = 1,0 kg/dm3 and kinematic viscosity ν = max 20 mm2/sec.
Pst = Power with reference to one stage.
A* Calpeda motor currents

MXV

## Characteristic curves n ≈ 2900 rpm

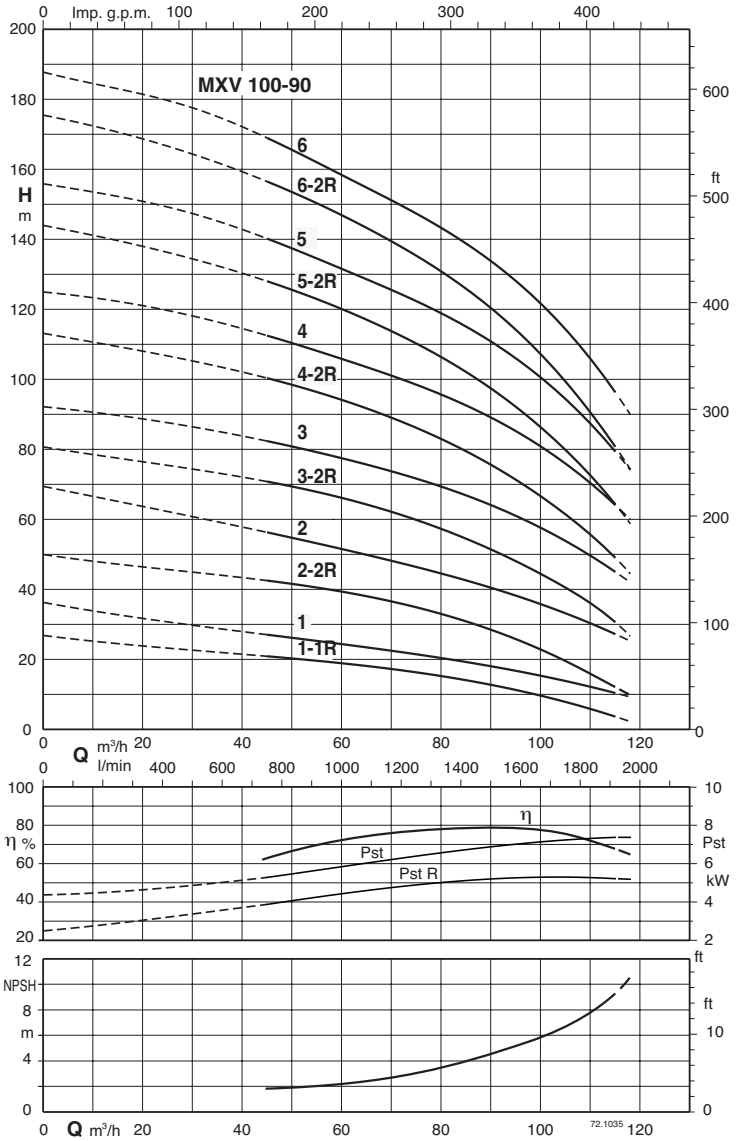


Test results with clean cold water, without gas content.
A safety margin of + 0.5 m is recommended for the NPSH value.
Tolerances in accordance with UNI EN ISO 9906:2012
Head and power values valid for liquids with density ρ = 1,0 kg/dm3 and kinematic viscosity ν = max 20 mm2/sec.
Pst = Power with reference to one stage.
A* Calpeda motor currents

MXV

calpeda

## Dimensions and weights

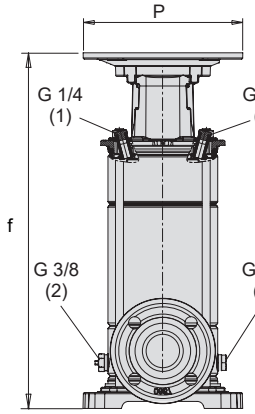


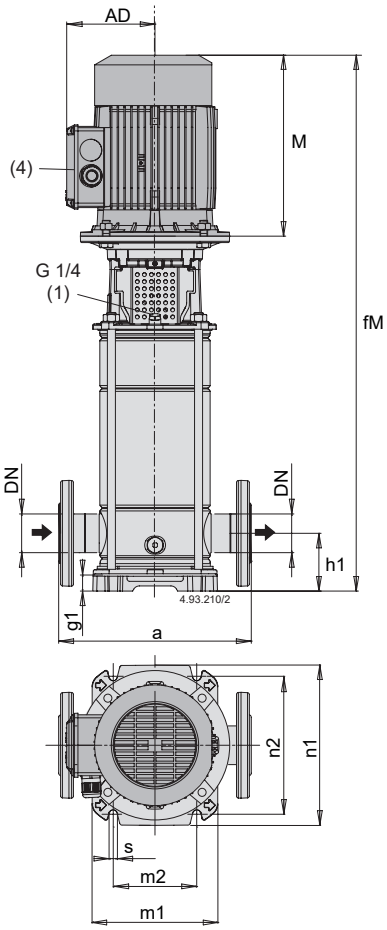


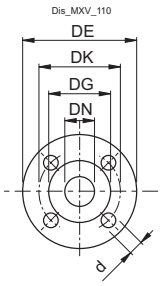


**Flanges EN 1092-2 PN 25 - 40**

| | | | | Holes | |
|---|---|---|---|---|---|
| DN | DE | DK | DG | N | Ø |
| 25 | 115 | 85 | 65 | 4 | 14 |
| 32 | 140 | 100 | 76 | 4 | 19 |
| 40 | 150 | 110 | 84 | 4 | 19 |

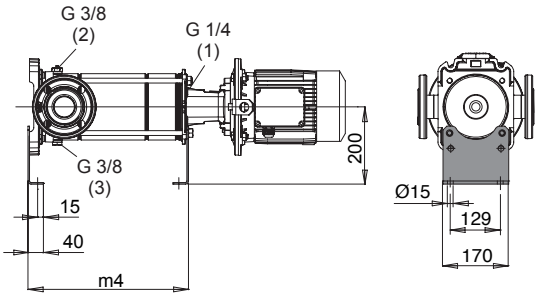


(1) Filling and air vent (2) Air vent suction side (3) Draining (4) Standard position of terminal box (for other positions rotate motor through 90° or 180°) (5) Net weight with standard motor

### Data also valid for MXVL (1.4401 EN 10088 (AISI 316))

| TYPE | Motor | | | mm | | | | | | | | | | | | | | | | Kg |
|---|---|---|---|---|---|---|---|---|---|---|---|---|---|---|---|---|---|---|---|---|
| | kW | HP | tipo | DN1 | DN2 | M | fM | P | AD | a | h1 | f | g1 | n1 | n2 | m1 | m2 | m4 | s | (5) |
| MXV 25-304 | 0,75 | 1 | 80 | 25 | 25 | 255 | 637.5 | 200 | 127.5 | 250 | 75 | 382.5 | 35.5 | 205 | 180 | 165 | 100 | 283 | 13 | 31 |
| MXV 25-305 | 0,75 | 1 | 80 | 25 | 25 | 255 | 661.5 | 200 | 127.5 | 250 | 75 | 406.5 | 35.5 | 205 | 180 | 165 | 100 | 307 | 13 | 38 |
| MXV 25-306 | 1,1 | 1,5 | 80 | 25 | 25 | 255 | 685.5 | 200 | 127.5 | 250 | 75 | 430.5 | 35.5 | 205 | 180 | 165 | 100 | 331 | 13 | 34.5 |
| MXV 25-307 | 1,1 | 1,5 | 80 | 25 | 25 | 255 | 709.5 | 200 | 127.5 | 250 | 75 | 454.5 | 35.5 | 205 | 180 | 165 | 100 | 355 | 13 | 35.3 |
| MXV 25-308 | 1,5 | 2 | 90 | 25 | 25 | 255 | 733.5 | 200 | 127.5 | 250 | 75 | 478.5 | 35.5 | 205 | 180 | 165 | 100 | 379 | 13 | 37.4 |
| MXV 25-310 | 1,5 | 2 | 90 | 25 | 25 | 255 | 782 | 200 | 127.5 | 250 | 75 | 527 | 35.5 | 205 | 180 | 165 | 100 | 427.5 | 13 | 38.9 |
| MXV 25-312 | 2,2 | 3 | 90 | 25 | 25 | 295 | 870.5 | 200 | 127.5 | 250 | 75 | 575.5 | 35.5 | 205 | 180 | 165 | 100 | 476 | 13 | 43.3 |
| MXV 25-314 | 2,2 | 3 | 90 | 25 | 25 | 295 | 918.5 | 200 | 127.5 | 250 | 75 | 623.5 | 35.5 | 205 | 180 | 165 | 100 | 524 | 13 | 45.2 |
| MXV 25-316 | 3 | 4 | 100 | 25 | 25 | 316 | 988 | 250 | 137.5 | 250 | 75 | 672 | 35.5 | 205 | 180 | 165 | 100 | 572.5 | 13 | 53.8 |
| MXV 25-318 | 3 | 4 | 100 | 25 | 25 | 316 | 1036.5 | 250 | 137.5 | 250 | 75 | 720.5 | 35.5 | 205 | 180 | 165 | 100 | 621 | 13 | 55.3 |
| MXV 25-320 | 3 | 4 | 100 | 25 | 25 | 316 | 1084.5 | 250 | 137.5 | 250 | 75 | 768.5 | 35.5 | 205 | 180 | 165 | 100 | 669 | 13 | 56.8 |
| MXV 32-504 | 1,1 | 1,5 | 80 | 32 | 32 | 255 | 637.5 | 200 | 127.5 | 250 | 75 | 382.5 | 35.5 | 205 | 180 | 165 | 100 | 283 | 13 | 34.1 |
| MXV 32-505 | 1,1 | 1,5 | 80 | 32 | 32 | 255 | 661.5 | 200 | 127.5 | 250 | 75 | 406.5 | 35.5 | 205 | 180 | 165 | 100 | 307 | 13 | 35.2 |
| MXV 32-506 | 1,5 | 2 | 90 | 32 | 32 | 255 | 685.5 | 200 | 127.5 | 250 | 75 | 430.5 | 35.5 | 205 | 180 | 165 | 100 | 331 | 13 | 37.3 |
| MXV 32-507 | 1,5 | 2 | 90 | 32 | 32 | 255 | 709.5 | 200 | 127.5 | 250 | 75 | 454.5 | 35.5 | 205 | 180 | 165 | 100 | 355 | 13 | 38 |
| MXV 32-508 | 2,2 | 3 | 90 | 32 | 32 | 295 | 773.5 | 200 | 127.5 | 250 | 75 | 478.5 | 35.5 | 205 | 180 | 165 | 100 | 379 | 13 | 41.7 |
| MXV 32-510 | 2,2 | 3 | 90 | 32 | 32 | 295 | 822 | 200 | 127.5 | 250 | 75 | 527 | 35.5 | 205 | 180 | 165 | 100 | 427.5 | 13 | 43.2 |
| MXV 32-512 | 3 | 4 | 100 | 32 | 32 | 311 | 886.5 | 250 | 137.5 | 250 | 75 | 575.5 | 35.5 | 205 | 180 | 165 | 100 | 476 | 13 | 52.3 |
| MXV 32-514 | 3 | 4 | 100 | 32 | 32 | 311 | 934.5 | 250 | 137.5 | 250 | 75 | 623.5 | 35.5 | 205 | 180 | 165 | 100 | 524 | 13 | 48.3 |
| MXV 32-516 | 4 | 5,5 | 112 | 32 | 32 | 311 | 983 | 250 | 137.5 | 250 | 75 | 672 | 35.5 | 205 | 180 | 165 | 100 | 527.5 | 13 | 58.4 |
| MXV 32-518 | 4 | 5,5 | 112 | 32 | 32 | 311 | 1031.5 | 250 | 137.5 | 250 | 75 | 720.5 | 35.5 | 205 | 180 | 165 | 100 | 621 | 13 | 60 |
| MXV 40-904 | 1,5 | 2 | 90 | 40 | 40 | 255 | 666.5 | 200 | 127.5 | 280 | 80 | 411.5 | 30.5 | 250 | 215 | 190 | 130 | 312 | 14 | 38 |
| MXV 40-905 | 2,2 | 3 | 90 | 40 | 40 | 295 | 736.5 | 200 | 127.5 | 280 | 80 | 441.5 | 30.5 | 250 | 215 | 190 | 130 | 342 | 14 | 42.3 |
| MXV 40-906 | 2,2 | 3 | 90 | 40 | 40 | 295 | 766.5 | 200 | 127.5 | 280 | 80 | 471.5 | 30.5 | 250 | 215 | 190 | 130 | 372 | 14 | 43.2 |
| MXV 40-907 | 3 | 4 | 100 | 40 | 40 | 311 | 812.5 | 250 | 137.5 | 280 | 80 | 501.5 | 30.5 | 250 | 215 | 190 | 130 | 402 | 14 | 52 |
| MXV 40-908 | 3 | 4 | 100 | 40 | 40 | 311 | 843 | 250 | 137.5 | 280 | 80 | 532 | 30.5 | 250 | 215 | 190 | 130 | 432.5 | 14 | 52.3 |
| MXV 40-910 | 4 | 5,5 | 112 | 40 | 40 | 311 | 903 | 250 | 137.5 | 280 | 80 | 592 | 30.5 | 250 | 215 | 190 | 130 | 492.5 | 14 | 57.2 |
| MXV 40-911 | 4 | 5,5 | 112 | 40 | 40 | 311 | 373 | 250 | 137.5 | 280 | 80 | 62 | 30.5 | 250 | 215 | 190 | 130 | 522.5 | 14 | 58.6 |
| MXV 40-913 | 5,5 | 7,5 | 132 | 40 | 40 | 339 | 1108.5 | 250 | 159.5 | 280 | 80 | 769.5 | 30.5 | 250 | 215 | 190 | 130 | 583.5 | 14 | 85.8 |
| MXV 40-915 | 5,5 | 7,5 | 132 | 40 | 40 | 339 | 1169 | 300 | 159.5 | 280 | 80 | 830 | 30.5 | 250 | 215 | 190 | 130 | 644 | 14 | 88.5 |
| MXV 40-917 | 7,5 | 10 | 132 | 40 | 40 | 339 | 1229 | 300 | 159.5 | 280 | 80 | 890 | 30.5 | 250 | 215 | 190 | 130 | 704 | 14 | 94.6 |
| MXV 40-919 | 7,5 | 10 | 132 | 40 | 40 | 339 | 1289 | 300 | 159.5 | 280 | 80 | 950 | 30.5 | 250 | 215 | 190 | 130 | 764 | 14 | 96.3 |

MXV

calpeda

## Dimensions and weights

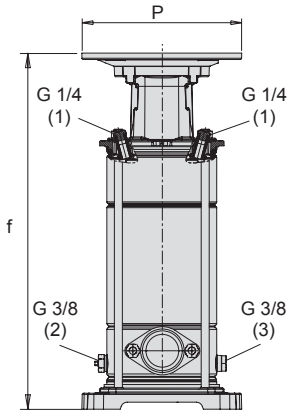


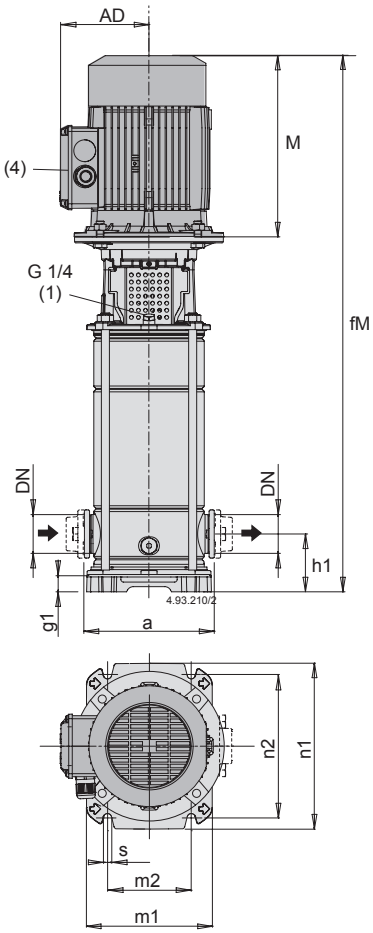


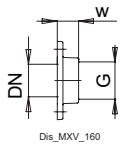


### Oval Counterflanges PN 16

| | | | Holes | |
|---|---|---|---|---|
| DN | G | w | N. | Ø |
| 25 | 1 | 23 | 2 | 12 |
| 32 | 1 1/4 | 23 | 2 | 12 |
| 40 | 1 1/2 | 26 | 2 | 15 |

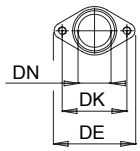


### Oval Flanges PN 16

| | | | Holes | |
|---|---|---|---|---|
| DN | DE | DK | N | Ø |
| 25 | 95 | 75 | 2 | M10 |
| 32 | 95 | 75 | 2 | M10 |
| 40 | 125 | 100 | 2 | M12 |

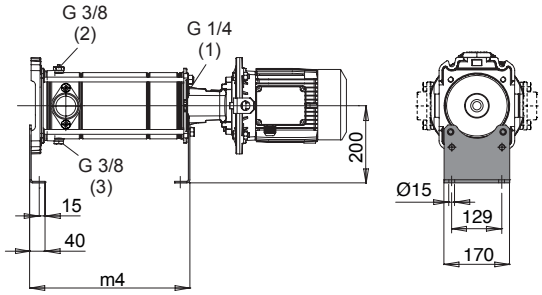


(1) Filling and air vent (2) Air vent suction side (3) Draining (4) Standard position of terminal box (for other positions rotate motor through 90° or 180°) (5) Net weight with standard motor

### Data also valid for MXVL (1.4401 EN 10088 (AISI 316))

| TYPE | Motor | | | mm | | | | | | | | | | | | | | | | Kg |
|---|---|---|---|---|---|---|---|---|---|---|---|---|---|---|---|---|---|---|---|---|
| | kW | HP | tipo | DN1 | DN2 | M | fM | P | AD | a | h1 | f | g1 | n1 | n2 | m1 | m2 | m4 | s | (5) |
| MXV 25-304 O | 0,75 | 1 | 80 | 25 | 25 | 255 | 622 | 200 | 127.5 | 160 | 50 | 367 | 20 | 205 | 180 | 165 | 100 | 268 | 13 | 28.6 |
| MXV 25-305 O | 0,75 | 1 | 80 | 25 | 25 | 255 | 646 | 200 | 127.5 | 160 | 50 | 391 | 20 | 205 | 180 | 165 | 100 | 292 | 13 | 29.4 |
| MXV 25-306 O | 1,1 | 1,5 | 80 | 25 | 25 | 255 | 670 | 200 | 127.5 | 160 | 50 | 415 | 20 | 205 | 180 | 165 | 100 | 316 | 13 | 31.6 |
| MXV 25-307 O | 1,1 | 1,5 | 80 | 25 | 25 | 255 | 694 | 200 | 127.5 | 160 | 50 | 439 | 20 | 205 | 180 | 165 | 100 | 340 | 13 | 32.9 |
| MXV 25-308 O | 1,5 | 2 | 90 | 25 | 25 | 255 | 718 | 200 | 127.5 | 160 | 50 | 463 | 20 | 205 | 180 | 165 | 100 | 364 | 13 | 34.9 |
| MXV 25-310 O | 1,5 | 2 | 90 | 25 | 25 | 255 | 766.5 | 200 | 127.5 | 160 | 50 | 511.5 | 20 | 205 | 180 | 165 | 100 | 412.5 | 13 | 36.5 |
| MXV 25-312 O | 2,2 | 3 | 90 | 25 | 25 | 295 | 855 | 200 | 127.5 | 160 | 50 | 560 | 20 | 205 | 180 | 165 | 100 | 461 | 13 | 39 |
| MXV 25-314 O | 2,2 | 3 | 90 | 25 | 25 | 295 | 903 | 200 | 127.5 | 160 | 50 | 608 | 20 | 205 | 180 | 165 | 100 | 509 | 13 | 41.5 |
| MXV 32-504 O | 1,1 | 1,5 | 80 | 32 | 32 | 255 | 622 | 200 | 127.5 | 160 | 50 | 367 | 20 | 205 | 180 | 165 | 100 | 267.5 | 13 | 30 |
| MXV 32-505 O | 1,1 | 1,5 | 80 | 32 | 32 | 255 | 946 | 200 | 127.5 | 160 | 50 | 691 | 20 | 205 | 180 | 165 | 100 | 291.5 | 13 | 31.4 |
| MXV 32-506 O | 1,5 | 2 | 90 | 32 | 32 | 255 | 670 | 200 | 127.5 | 160 | 50 | 415 | 20 | 205 | 180 | 165 | 100 | 315.5 | 13 | 33.6 |
| MXV 32-507 O | 1,5 | 2 | 90 | 32 | 32 | 255 | 694 | 200 | 127.5 | 160 | 50 | 439 | 20 | 205 | 180 | 165 | 100 | 339.5 | 13 | 34.1 |
| MXV 32-508 O | 2,2 | 3 | 90 | 32 | 32 | 295 | 758 | 200 | 127.5 | 160 | 50 | 463 | 20 | 205 | 180 | 165 | 100 | 363.5 | 13 | 38.2 |
| MXV 32-510 O | 2,2 | 3 | 90 | 32 | 32 | 295 | 806.5 | 200 | 127.5 | 160 | 50 | 511.5 | 20 | 205 | 180 | 165 | 100 | 412 | 13 | 38.7 |
| MXV 32-512 O | 3 | 4 | 100 | 32 | 32 | 311 | 871 | 250 | 137.5 | 160 | 50 | 560 | 20 | 205 | 180 | 165 | 100 | 460.5 | 13 | 48.2 |
| MXV 32-514 O | 3 | 4 | 100 | 32 | 32 | 311 | 919 | 250 | 137.5 | 160 | 50 | 608 | 20 | 205 | 180 | 165 | 100 | 508.5 | 13 | 49.3 |
| MXV 40-904 O | 1,5 | 2 | 90 | 40 | 40 | 255 | 666.5 | 200 | 127.5 | 200 | 80 | 411.5 | 30.5 | 250 | 215 | 190 | 130 | 312 | 14 | 35 |
| MXV 40-905 O | 2,2 | 3 | 90 | 40 | 40 | 295 | 736.5 | 200 | 127.5 | 200 | 80 | 441.5 | 30.5 | 250 | 215 | 190 | 130 | 342 | 14 | 39.9 |
| MXV 40-906 O | 2,2 | 3 | 90 | 40 | 40 | 295 | 766.5 | 200 | 127.5 | 200 | 80 | 471.5 | 30.5 | 250 | 215 | 190 | 130 | 372 | 14 | 40 |
| MXV 40-907 O | 3 | 4 | 100 | 40 | 40 | 311 | 812.5 | 250 | 137.5 | 200 | 80 | 501.5 | 30.5 | 250 | 215 | 190 | 130 | 402 | 14 | 49.2 |
| MXV 40-908 O | 3 | 4 | 100 | 40 | 40 | 311 | 843 | 250 | 137.5 | 200 | 80 | 532 | 30.5 | 250 | 215 | 190 | 130 | 432.5 | 14 | 49.9 |
| MXV 40-910 O | 4 | 5,5 | 112 | 40 | 40 | 311 | 903 | 250 | 137.5 | 200 | 80 | 592 | 30.5 | 250 | 215 | 190 | 130 | 492.5 | 14 | 55.5 |
| MXV 40-911 O | 4 | 5,5 | 112 | 40 | 40 | 311 | 933 | 250 | 137.5 | 200 | 80 | 622 | 30.5 | 250 | 215 | 190 | 130 | 522.5 | 14 | 55.8 |
| MXV 40-913 O | 5,5 | 7,5 | 132 | 40 | 40 | 339 | 1108.5 | 300 | 159.5 | 200 | 80 | 769.5 | 30.5 | 250 | 215 | 190 | 130 | 583.5 | 14 | 88.7 |

MXV

calpeda

## Dimensions and weights

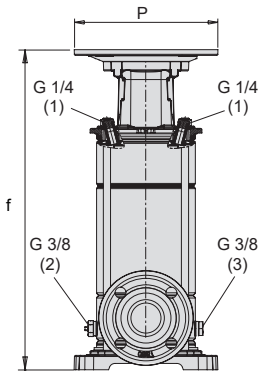


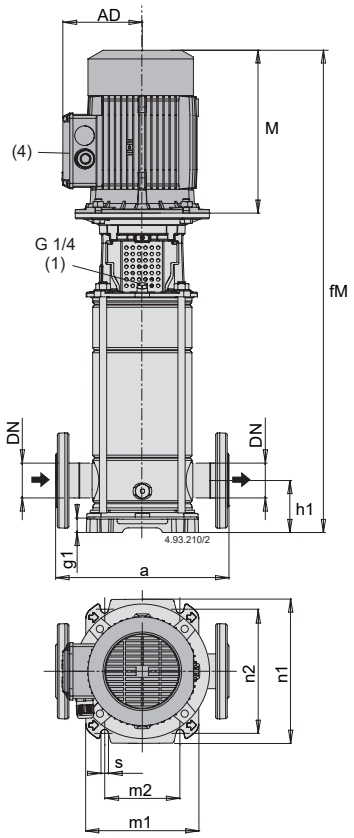


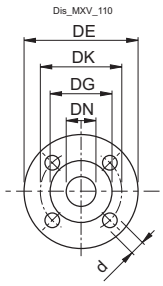


**Flanges EN 1092-2 PN 25 - 40**

| | | | | Holes | |
|---|---|---|---|---|---|
| DN | DE | DK | DG | N | Ø |
| 50 | 165 | 125 | 99 | 4 | 19 |

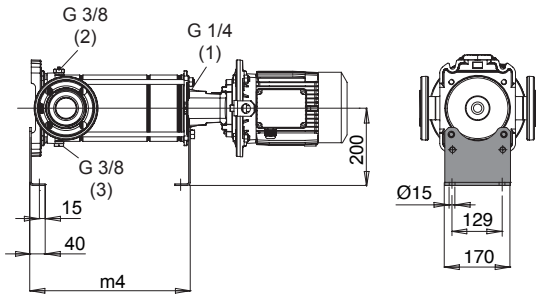


(1) Filling and air vent (2) Air vent suction side (3) Draining (4) Standard position of terminal box (for other positions rotate motor through 90° or 180°) (5) Net weight with standard motor

### Data also valid for MXVL (1.4401 EN 10088 (AISI 316))

| TYPE | Motor | | | mm | | | | | | | | | | | | | | | | Kg |
|---|---|---|---|---|---|---|---|---|---|---|---|---|---|---|---|---|---|---|---|---|
| | kW | HP | tipo | DN1 | DN2 | M | fM | P | AD | a | h1 | f | g1 | n1 | n2 | m1 | m2 | m4 | s | (5) |
| MXV 50-1501 | 1,1 | 1,5 | 80 | 50 | 50 | 255 | 693 | 200 | 127.5 | 300 | 90 | 438 | 25 | 250 | 215 | 196 | 130 | 349 | 13 | 41.5 |
| MXV 50-1502 | 1,5 | 2 | 90 | 50 | 50 | 295 | 733 | 200 | 127.5 | 300 | 90 | 438 | 25 | 250 | 215 | 196 | 130 | 349 | 13 | 44.8 |
| MXV 50-1503/A | 2,2 | 3 | 90 | 50 | 50 | 295 | 781 | 200 | 127.5 | 300 | 90 | 486 | 25 | 250 | 215 | 196 | 130 | 397 | 13 | 54.5 |
| MXV 50-1504 | 3 | 4 | 100 | 50 | 50 | 311 | 845 | 250 | 137.5 | 300 | 90 | 534 | 25 | 250 | 215 | 196 | 130 | 445 | 13 | 55.8 |
| MXV 50-1505 | 4 | 5,5 | 112 | 50 | 50 | 311 | 893 | 250 | 137.5 | 300 | 90 | 582 | 25 | 250 | 215 | 196 | 130 | 493 | 13 | 61.1 |
| MXV 50-1506 | 5,5 | 7,5 | 132 | 50 | 50 | 339 | 1032 | 300 | 159.5 | 300 | 90 | 693 | 25 | 250 | 215 | 196 | 130 | 541 | 13 | 86.5 |
| MXV 50-1507 | 5,5 | 7,5 | 132 | 50 | 50 | 339 | 1080 | 300 | 159.5 | 300 | 90 | 741 | 25 | 250 | 215 | 196 | 130 | 589 | 13 | 88.4 |
| MXV 50-1508/A | 5,5 | 7,5 | 132 | 50 | 50 | 339 | 1128 | 300 | 159.5 | 300 | 90 | 789 | 25 | 250 | 215 | 196 | 130 | 637 | 13 | 89.3 |
| MXV 50-1509 | 7,5 | 10 | 132 | 50 | 50 | 339 | 1176 | 300 | 159.5 | 300 | 90 | 837 | 25 | 250 | 215 | 196 | 130 | 685 | 13 | 96.5 |
| MXV 50-1510 | 7,5 | 10 | 132 | 50 | 50 | 339 | 1224 | 300 | 159.5 | 300 | 90 | 885 | 25 | 250 | 215 | 196 | 130 | 733 | 13 | 99 |
| MXV 50-1511 | 9,2 | 12,5 | 160 | 50 | 50 | 413 | 1376 | 350 | 186 | 300 | 90 | 963 | 25 | 250 | 215 | 196 | 130 | 781 | 13 | 131.5 |
| MXV 50-1512 | 9,2 | 12,5 | 160 | 50 | 50 | 413 | 1424 | 350 | 186 | 300 | 90 | 1011 | 25 | 250 | 215 | 196 | 130 | 829 | 13 | 129.4 |
| MXV 50-1513 | 11 | 15 | 160 | 50 | 50 | 459 | 1518 | 350 | 186 | 300 | 90 | 1059 | 25 | 250 | 215 | 196 | 130 | 877 | 13 | 138.5 |
| MXV 50-1514 | 11 | 15 | 160 | 50 | 50 | 459 | 1566 | 350 | 186 | 300 | 90 | 1107 | 25 | 250 | 215 | 196 | 130 | 925 | 13 | 143.3 |
| MXV 50-1515 | 11 | 15 | 160 | 50 | 50 | 459 | 1614 | 350 | 186 | 300 | 90 | 1155 | 25 | 250 | 215 | 196 | 130 | 973 | 13 | 146 |
| MXV 50-1516 | 15 | 20 | 160 | 50 | 50 | 484 | 1687 | 350 | 186 | 300 | 90 | 1203 | 25 | 250 | 215 | 196 | 130 | 1021 | 13 | 165 |
| MXV 50-1517 | 15 | 20 | 160 | 50 | 50 | 484 | 1735 | 350 | 186 | 300 | 90 | 1251 | 25 | 250 | 215 | 196 | 130 | 1069 | 13 | 167.7 |
| MXV 50-2001 | 1,1 | 1,5 | 80 | 50 | 50 | 255 | 693 | 200 | 127.5 | 300 | 90 | 438 | 25 | 250 | 215 | 196 | 130 | 349 | 13 | 42.3 |
| MXV 50-2002 | 2,2 | 3 | 90 | 50 | 50 | 295 | 733 | 200 | 127.5 | 300 | 90 | 438 | 25 | 250 | 215 | 196 | 130 | 349 | 13 | 46.3 |
| MXV 50-2003 | 3 | 4 | 100 | 50 | 50 | 311 | 797 | 250 | 137.5 | 300 | 90 | 486 | 25 | 250 | 215 | 196 | 130 | 397 | 13 | 54.8 |
| MXV 50-2004 | 4 | 5,5 | 112 | 50 | 50 | 311 | 832 | 250 | 137.5 | 300 | 90 | 521 | 25 | 250 | 215 | 196 | 130 | 445 | 13 | 49 |
| MXV 50-2005 | 5,5 | 7,5 | 132 | 50 | 50 | 339 | 984 | 300 | 159.5 | 300 | 90 | 645 | 25 | 250 | 215 | 196 | 130 | 493 | 13 | 84.6 |
| MXV 50-2006 | 7,5 | 10 | 132 | 50 | 50 | 339 | 1032 | 300 | 159.5 | 300 | 90 | 693 | 25 | 250 | 215 | 196 | 130 | 541 | 13 | 100 |
| MXV 50-2007 | 7,5 | 10 | 132 | 50 | 50 | 339 | 1080 | 300 | 159.5 | 300 | 90 | 741 | 25 | 250 | 215 | 196 | 130 | 589 | 13 | 94.2 |
| MXV 50-2008 | 9,2 | 12,5 | 160 | 50 | 50 | 413 | 1232 | 350 | 186 | 300 | 90 | 819 | 25 | 250 | 215 | 196 | 130 | 637 | 13 | 125 |
| MXV 50-2009 | 9,2 | 12,5 | 160 | 50 | 50 | 413 | 1280 | 350 | 186 | 300 | 90 | 867 | 25 | 250 | 215 | 196 | 130 | 685 | 13 | 123.7 |
| MXV 50-2010 | 11 | 15 | 160 | 50 | 50 | 459 | 1374 | 350 | 186 | 300 | 90 | 915 | 25 | 250 | 215 | 196 | 130 | 733 | 13 | 146 |
| MXV 50-2011 | 11 | 15 | 160 | 50 | 50 | 459 | 1422 | 350 | 186 | 300 | 90 | 963 | 25 | 250 | 215 | 196 | 130 | 781 | 13 | 132.7 |
| MXV 50-2012 | 15 | 20 | 160 | 50 | 50 | 484 | 1495 | 350 | 186 | 300 | 90 | 1011 | 25 | 250 | 215 | 196 | 130 | 829 | 13 | - |
| MXV 50-2013 | 15 | 20 | 160 | 50 | 50 | 484 | 1543 | 350 | 186 | 300 | 90 | 1059 | 25 | 250 | 215 | 196 | 130 | 877 | 13 | 164.1 |
| MXV 50-2014 | 15 | 20 | 160 | 50 | 50 | 484 | 1591 | 350 | 186 | 300 | 90 | 1107 | 25 | 250 | 215 | 196 | 130 | 925 | 13 | 160 |
| MXV 50-2015 | 15 | 20 | 160 | 50 | 50 | 484 | 1639 | 350 | 186 | 300 | 90 | 1155 | 25 | 250 | 215 | 196 | 130 | 973 | 13 | 167 |
| MXV 50-2016 | 18,5 | 25 | 160 | 50 | 50 | 484 | 1687 | 350 | 186 | 300 | 90 | 1203 | 25 | 250 | 215 | 196 | 130 | 1021 | 13 | 192 |
| MXV 50-2017 | 18,5 | 25 | 160 | 50 | 50 | 484 | 1735 | 350 | 186 | 300 | 90 | 1251 | 25 | 250 | 215 | 196 | 130 | 1069 | 13 | 192.2 |

MXV

calpeda

## Dimensions and weights

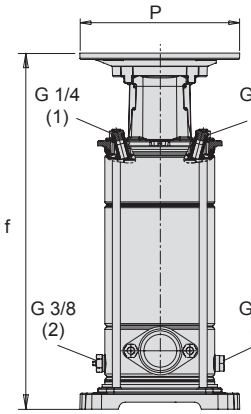


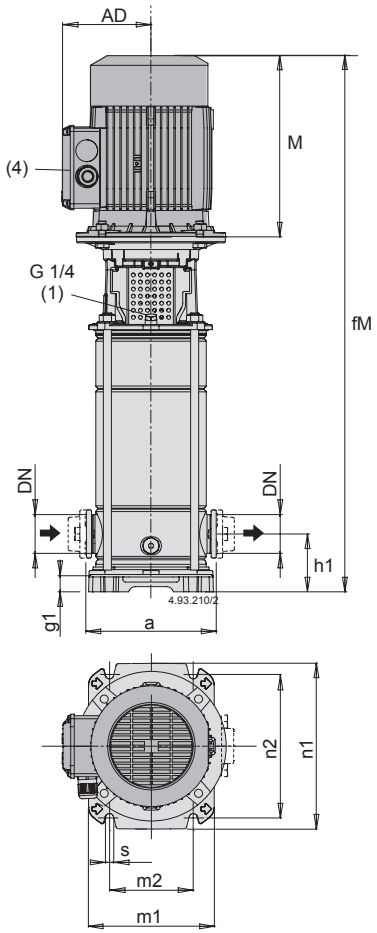


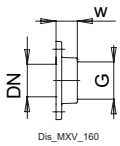


### Oval Counterflanges PN 16

| | | | Holes | |
|---|---|---|---|---|
| DN | G | w | N. | Ø |
| 50 | 2 | 34 | 2 | 15 |

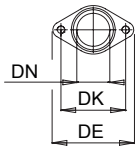


### Oval Flanges PN 16

| | | | Holes | |
|---|---|---|---|---|
| DN | DE | DK | N. | Ø |
| 50 | 130 | 100 | 2 | M12 |

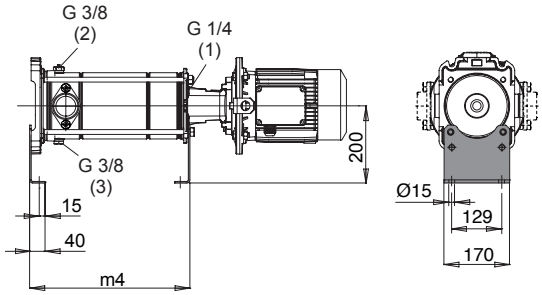


(1) Filling and air vent (2) Air vent suction side (3) Draining (4) Standard position of terminal box (for other positions rotate motor through 90° or 180°) (5) Net weight with standard motor

### Data also valid for MXVL (1.4401 EN 10088 (AISI 316))

| TYPE | Motor | | | mm | | | | | | | | | | | | | | | | Kg |
|---|---|---|---|---|---|---|---|---|---|---|---|---|---|---|---|---|---|---|---|---|
| | kW | HP | tipo | DN1 | DN2 | M | fM | P | AD | a | h1 | f | g1 | n1 | n2 | m1 | m2 | m4 | s | (5) |
| MXV 50-1501 O | 1,1 | 1,5 | 80 | 50 | 50 | 255 | 693 | 200 | 127.5 | 200 | 90 | 438 | 25 | 250 | 215 | 196 | 130 | 349 | 13 | - |
| MXV 50-1502 O | 1,5 | 2 | 90 | 50 | 50 | 295 | 733 | 200 | 127.5 | 200 | 90 | 438 | 25 | 250 | 215 | 196 | 130 | 349 | 13 | 38.5 |
| MXV 50-1503/A O | 2,2 | 3 | 90 | 50 | 50 | 295 | 781 | 200 | 127.5 | 200 | 90 | 486 | 25 | 250 | 215 | 196 | 130 | 397 | 13 | 50.1 |
| MXV 50-1504 O | 3 | 4 | 100 | 50 | 50 | 311 | 845 | 250 | 137.5 | 200 | 90 | 534 | 25 | 250 | 215 | 196 | 130 | 445 | 13 | 52.7 |
| MXV 50-1505 O | 4 | 5,5 | 112 | 50 | 50 | 311 | 893 | 250 | 137.5 | 200 | 90 | 582 | 25 | 250 | 215 | 196 | 130 | 493 | 13 | 57.7 |
| MXV 50-1506 O | 5,5 | 7,5 | 132 | 50 | 50 | 339 | 1032 | 300 | 159.5 | 200 | 90 | 693 | 25 | 250 | 215 | 196 | 130 | 541 | 13 | 84 |
| MXV 50-1507 O | 5,5 | 7,5 | 132 | 50 | 50 | 339 | 1080 | 300 | 159.5 | 200 | 90 | 741 | 25 | 250 | 215 | 196 | 130 | 589 | 13 | 85.4 |
| MXV 50-1508/A O | 5,5 | 7,5 | 132 | 50 | 50 | 339 | 1128 | 300 | 159.5 | 200 | 90 | 789 | 25 | 250 | 215 | 196 | 130 | 637 | 13 | 87.3 |
| MXV 50-1509 O | 7,5 | 10 | 132 | 50 | 50 | 339 | 1176 | 300 | 159.5 | 200 | 90 | 837 | 25 | 250 | 215 | 196 | 130 | 685 | 13 | 95.8 |
| MXV 50-1510 O | 7,5 | 10 | 132 | 50 | 50 | 339 | 1224 | 300 | 159.5 | 200 | 90 | 885 | 25 | 250 | 215 | 196 | 130 | 733 | 13 | 96.4 |
| MXV 50-2001 O | 1,1 | 1,5 | 80 | 50 | 50 | 255 | 693 | 200 | 127.5 | 200 | 90 | 438 | 25 | 250 | 215 | 196 | 130 | 349 | 13 | 38 |
| MXV 50-2002 O | 2,2 | 3 | 90 | 50 | 50 | 295 | 733 | 200 | 127.5 | 200 | 90 | 438 | 25 | 250 | 215 | 196 | 130 | 349 | 13 | - |
| MXV 50-2003 O | 3 | 4 | 100 | 50 | 50 | 311 | 797 | 250 | 137.5 | 200 | 90 | 486 | 25 | 250 | 215 | 196 | 130 | 397 | 13 | 52.1 |
| MXV 50-2004 O | 4 | 5,5 | 112 | 50 | 50 | 311 | 832 | 250 | 137.5 | 200 | 90 | 521 | 25 | 250 | 215 | 196 | 130 | 445 | 13 | 55.2 |
| MXV 50-2005 O | 5,5 | 7,5 | 132 | 50 | 50 | 339 | 984 | 300 | 159.5 | 200 | 90 | 645 | 25 | 250 | 215 | 196 | 130 | 493 | 13 | 82.5 |
| MXV 50-2006 O | 7,5 | 10 | 132 | 50 | 50 | 339 | 1032 | 300 | 159.5 | 200 | 90 | 693 | 25 | 250 | 215 | 196 | 130 | 541 | 13 | - |
| MXV 50-2007 O | 7,5 | 10 | 132 | 50 | 50 | 339 | 1080 | 300 | 159.5 | 200 | 90 | 741 | 25 | 250 | 215 | 196 | 130 | 589 | 13 | 91 |
| MXV 50-2008 O | 9,2 | 12,5 | 160 | 50 | 50 | 413 | 1232 | 350 | 186 | 200 | 90 | 819 | 25 | 250 | 215 | 196 | 130 | 637 | 13 | - |
| MXV 50-2009 O | 9,2 | 12,5 | 160 | 50 | 50 | 413 | 1280 | 350 | 186 | 200 | 90 | 867 | 25 | 250 | 215 | 196 | 130 | 685 | 13 | 126.5 |
| MXV 50-2010 O | 11 | 15 | 160 | 50 | 50 | 459 | 1374 | 350 | 186 | 200 | 90 | 915 | 25 | 250 | 215 | 196 | 130 | 733 | 13 | - |

MXV

calpeda

## Dimensions and weights

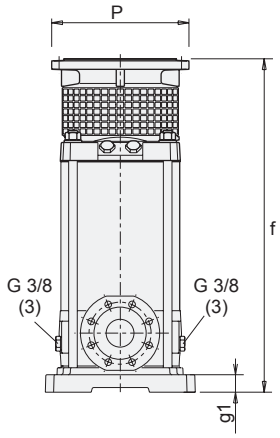


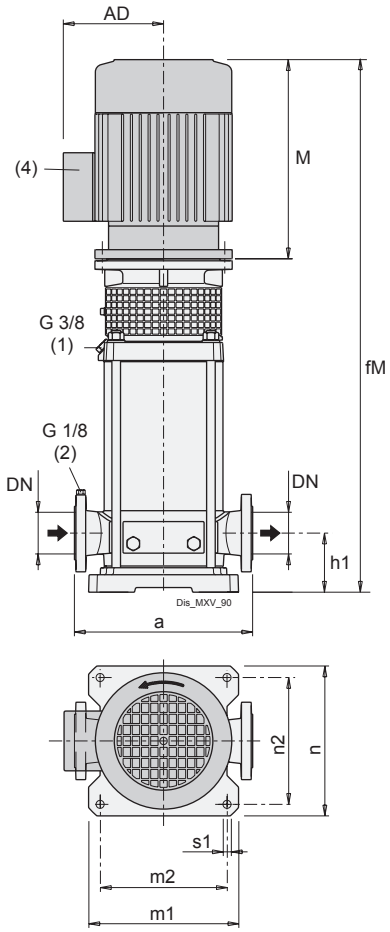


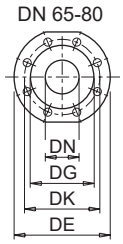


**Flanges EN 1092-2**

| | | | | Holes | |
|---|---|---|---|---|---|
| DN | DE | DK | DG | N | Ø |
| 65 | 185 | 145 | 118 | 8 | 19 |
| 80 | 200 | 160 | 132 | 8 | 19 |

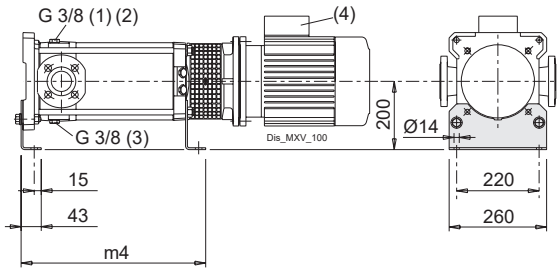


(1) Filling and air vent (2) Air vent suction side (3) Draining (4) Standard position of terminal box (for other positions rotate motor through 90° or 180°) (5) Net weight with standard motor

### Data also valid for MXVL (1.4401 EN 10088 (AISI 316))

| TYPE | Motor | | | mm | | | | | | | | | | | | | | | | Kg |
|---|---|---|---|---|---|---|---|---|---|---|---|---|---|---|---|---|---|---|---|---|
| | kW | HP | tipo | DN1 | DN2 | M | fM | P | AD | a | h1 | f | g1 | n1 | n2 | m1 | m2 | m4 | s | (5) |
| MXV 65-3202/D | 4 | 5,5 | 112 | 65 | 65 | 311 | 718 | 250 | 137.5 | 320 | 105 | 407 | 35 | 260 | 220 | 260 | 220 | 334 | 14 | 72 |
| MXV 65-3203/C | 5,5 | 7,5 | 132 | 65 | 65 | 339 | 812 | 300 | 159.5 | 320 | 105 | 473 | 35 | 260 | 220 | 260 | 220 | 380 | 14 | 93 |
| MXV 65-3204/C | 7,5 | 10 | 132 | 65 | 65 | 339 | 858 | 300 | 159.5 | 320 | 105 | 519 | 35 | 260 | 220 | 260 | 220 | 426 | 14 | 100.7 |
| MXV 65-3205/D | 11 | 15 | 160 | 65 | 65 | 459 | 1054 | 350 | 186 | 320 | 105 | 595 | 35 | 260 | 220 | 260 | 220 | 472 | 14 | 140.5 |
| MXV 65-3206/D | 11 | 15 | 160 | 65 | 65 | 459 | 1100 | 350 | 186 | 320 | 105 | 641 | 35 | 260 | 220 | 260 | 220 | 518 | 14 | 144 |
| MXV 65-3207/D | 15 | 20 | 160 | 65 | 65 | 484 | 1171 | 350 | 186 | 320 | 105 | 687 | 35 | 260 | 220 | 260 | 220 | 564 | 14 | 164 |
| MXV 65-3208/D | 15 | 20 | 160 | 65 | 65 | 484 | 1217 | 350 | 186 | 320 | 105 | 733 | 35 | 260 | 220 | 260 | 220 | 610 | 14 | 165 |
| MXV 65-3209/E | 18,5 | 25 | 160 | 65 | 65 | 538 | 1290 | 350 | 206 | 320 | 105 | 779 | 35 | 260 | 220 | 260 | 220 | 656 | 14 | 192.7 |
| MXV 65-3210/E | 18,5 | 25 | 160 | 65 | 65 | 538 | 1363 | 350 | 206 | 320 | 105 | 825 | 35 | 260 | 220 | 260 | 220 | 702 | 14 | 194.7 |
| MXV 65-3212/D | 22 | 30 | 180 | 65 | 65 | 538 | 1455 | 350 | 206 | 320 | 105 | 917 | 35 | 260 | 220 | 260 | 220 | 794 | 14 | 204.8 |
| MXV 80-4801/D | 4 | 5,5 | 112 | 80 | 80 | 311 | 722 | 250 | 137.5 | 320 | 105 | 411 | 35 | 260 | 220 | 260 | 220 | 338 | 14 | 73.3 |
| MXV 80-4802/C | 5,5 | 7,5 | 132 | 80 | 80 | 339 | 805 | 300 | 159.5 | 320 | 105 | 466 | 35 | 260 | 220 | 260 | 220 | 373 | 14 | 93.8 |
| MXV 80-4803/C | 7,5 | 10 | 132 | 80 | 80 | 339 | 866 | 300 | 159.5 | 320 | 105 | 527 | 35 | 260 | 220 | 260 | 220 | 434 | 14 | 103.2 |
| MXV 80-4804/D | 11 | 15 | 160 | 80 | 80 | 459 | 1077 | 350 | 186 | 320 | 105 | 618 | 35 | 260 | 220 | 260 | 220 | 495 | 14 | 154 |
| MXV 80-4805/D | 15 | 20 | 160 | 80 | 80 | 484 | 1164 | 350 | 186 | 320 | 105 | 680 | 35 | 260 | 220 | 260 | 220 | 557 | 14 | 165.5 |
| MXV 80-4806/D | 15 | 20 | 160 | 80 | 80 | 484 | 1225 | 350 | 186 | 320 | 105 | 741 | 35 | 260 | 220 | 260 | 220 | 618 | 14 | 168 |
| MXV 80-4807/E | 18,5 | 25 | 160 | 80 | 80 | 538 | 1340 | 350 | 206 | 320 | 105 | 802 | 35 | 260 | 220 | 260 | 220 | 679 | 14 | 195 |
| MXV 80-4808/D | 22 | 30 | 180 | 80 | 80 | 538 | 1402 | 350 | 206 | 320 | 105 | 864 | 35 | 260 | 220 | 260 | 220 | 741 | 14 | 203.8 |

MXV

calpeda

## Dimensions and weights

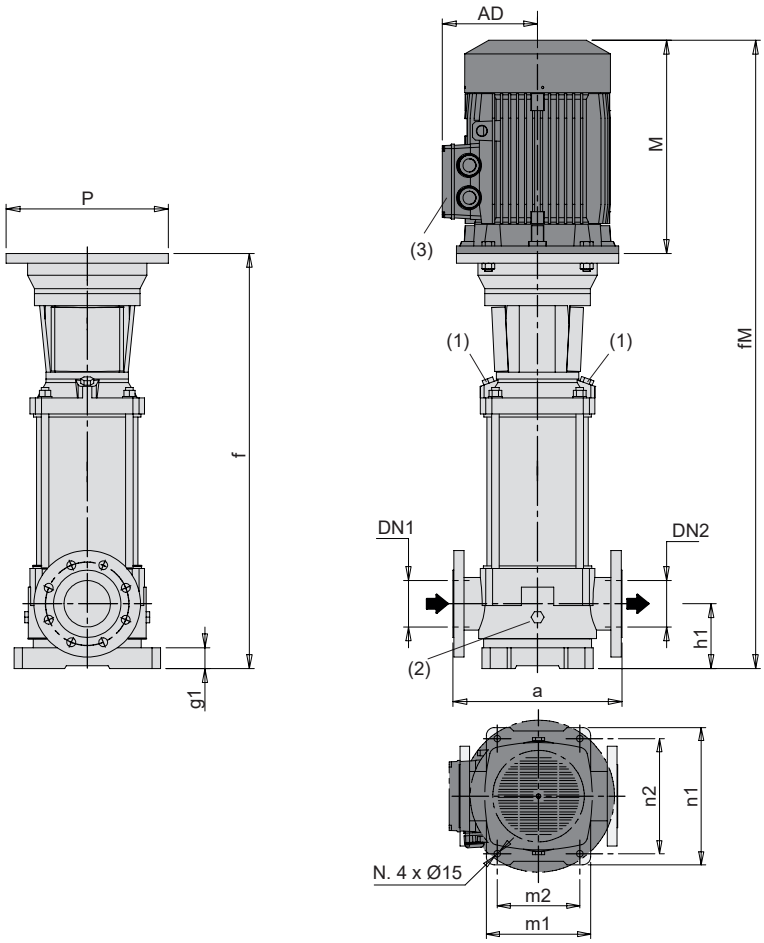


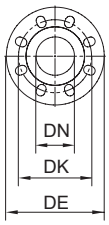


### EN 1092-2 compatible flanges

| | | | | Holes | |
|---|---|---|---|---|---|
| DN | PN | DE | DK | N | Ø |
| 100 | 16 | 230 | 180 | 8 | 19 |
| 100 | 25 | 225 | 190 | 8 | 23 |

(1) Filling and Discharge | (2) Discharge

### Data also valid for MXVL (1.4401 EN 10088 (AISI 316))

| TYPE | Motor | | | mm | | | | | | | | | | | | | Kg |
|---|---|---|---|---|---|---|---|---|---|---|---|---|---|---|---|---|---|
| | kW | HP | tipo | DN1 | DN2 | M | fM | P | AD | a | h1 | f | n1 | n2 | m1 | m2 | (5) |
| MXV 100-6501/A | 5,5 | 7,5 | 132 | 100 | 100 | 339 | 1096 | 300 | 159.5 | 365 | 140 | 757 | 316 | 265 | 240 | 190 | 120.5 |
| MXV 100-6502-2R/A | 7,5 | 10 | 132 | 100 | 100 | 339 | 1188 | 300 | 159.5 | 365 | 140 | 849 | 316 | 265 | 240 | 190 | 133.8 |
| MXV 100-6502/A | 11 | 15 | 160 | 100 | 100 | 459 | 1308 | 350 | 186 | 365 | 140 | 849 | 316 | 265 | 240 | 190 | 177 |
| MXV 100-6503-2R/A | 15 | 20 | 160 | 100 | 100 | 484 | 1425 | 350 | 186 | 365 | 140 | 941 | 316 | 265 | 240 | 190 | 191.5 |
| MXV 100-6503/B | 18,5 | 25 | 160 | 100 | 100 | 538 | 1484 | 350 | 206 | 365 | 140 | 946 | 316 | 265 | 240 | 190 | 215 |
| MXV 100-6504-2R/B | 18,5 | 25 | 160 | 100 | 100 | 538 | 1576 | 350 | 206 | 365 | 140 | 1038 | 316 | 265 | 240 | 190 | 220.5 |
| MXV 100-6504/A | 22 | 30 | 180 | 100 | 100 | 538 | 1576 | 350 | 206 | 365 | 140 | 1038 | 316 | 265 | 240 | 190 | 227 |
| MXV 100-6505-2R/A | 30 | 40 | 200 | 100 | 100 | 636 | 1766 | 400 | 315 | 365 | 140 | 1130 | 316 | 265 | 240 | 190 | 290 |
| MXV 100-6505/A | 30 | 40 | 200 | 100 | 100 | 636 | 1766 | 400 | 315 | 365 | 140 | 1130 | 316 | 265 | 240 | 190 | 288.5 |
| MXV 100-6506-2R/A | 30 | 40 | 200 | 100 | 100 | 636 | 1859 | 400 | 315 | 365 | 140 | 1223 | 316 | 265 | 240 | 190 | 294.5 |
| MXV 100-6506/A | 37 | 50 | 200 | 100 | 100 | 636 | 1859 | 400 | 315 | 365 | 140 | 1223 | 316 | 265 | 240 | 190 | - |
| MXV 100-6507-2R/A | 37 | 50 | 200 | 100 | 100 | 636 | 1951 | 400 | 315 | 365 | 140 | 1315 | 316 | 265 | 240 | 190 | 364.5 |
| MXV 100-6507/A | 45 | 60 | 225 | 100 | 100 | 708 | 2023 | 450 | 338 | 365 | 140 | 1315 | 316 | 265 | 240 | 190 | - |
| MXV 100-6508-2R/A | 45 | 60 | 225 | 100 | 100 | 708 | 2115 | 450 | 338 | 365 | 140 | 1407 | 316 | 265 | 240 | 190 | - |
| MXV 100-6508/A | 45 | 60 | 225 | 100 | 100 | 708 | 2115 | 450 | 338 | 365 | 140 | 1407 | 316 | 265 | 240 | 190 | - |
| MXV 100-9001-1R/A | 5,5 | 7,5 | 132 | 100 | 100 | 339 | 1096 | 300 | 159.5 | 380 | 140 | 757 | 341 | 280 | 260 | 199 | 123 |
| MXV 100-9001/A | 7,5 | 10 | 132 | 100 | 100 | 339 | 1096 | 300 | 159.5 | 380 | 140 | 757 | 341 | 280 | 260 | 199 | 131 |
| MXV 100-9002-2R/A | 11 | 15 | 160 | 100 | 100 | 459 | 1308 | 350 | 186 | 380 | 140 | 849 | 341 | 280 | 260 | 199 | 178.5 |
| MXV 100-9002/A | 15 | 20 | 160 | 100 | 100 | 484 | 1338 | 350 | 186 | 380 | 140 | 854 | 341 | 280 | 260 | 199 | 193 |
| MXV 100-9003-2R/B | 18,5 | 25 | 160 | 100 | 100 | 538 | 1484 | 350 | 206 | 380 | 140 | 946 | 341 | 280 | 260 | 199 | 218 |
| MXV 100-9003/A | 22 | 30 | 180 | 100 | 100 | 538 | 1484 | 350 | 206 | 380 | 140 | 946 | 341 | 280 | 260 | 199 | 217.2 |
| MXV 100-9004-2R/A | 30 | 40 | 200 | 100 | 100 | 636 | 1674 | 400 | 315 | 380 | 140 | 1038 | 341 | 280 | 260 | 199 | 283.8 |
| MXV 100-9004/A | 30 | 40 | 200 | 100 | 100 | 636 | 1674 | 400 | 315 | 380 | 140 | 1038 | 341 | 280 | 260 | 199 | 253 |
| MXV 100-9005-2R/A | 37 | 50 | 200 | 100 | 100 | 636 | 1767 | 400 | 315 | 380 | 140 | 1131 | 341 | 280 | 260 | 199 | - |
| MXV 100-9005/A | 37 | 50 | 200 | 100 | 100 | 636 | 1767 | 400 | 315 | 380 | 140 | 1131 | 341 | 280 | 260 | 199 | 359 |
| MXV 100-9006-2R/A | 45 | 60 | 225 | 100 | 100 | 708 | 1931 | 450 | 338 | 380 | 140 | 1223 | 341 | 280 | 260 | 199 | 392 |
| MXV 100-9006/A | 45 | 60 | 225 | 100 | 100 | 708 | 1931 | 450 | 338 | 380 | 140 | 1223 | 341 | 280 | 260 | 199 | 378.6 |

MXV

calpeda

## Dimensions and weights

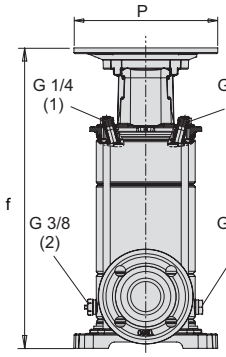


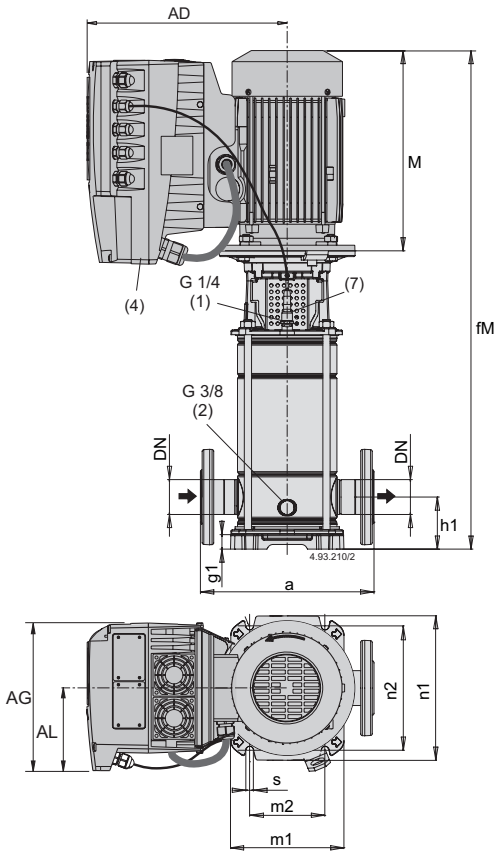


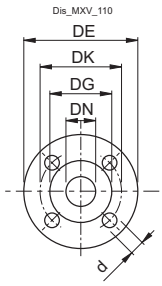


**Flanges EN 1092-2 PN 25 - 40**

| | | | | Holes | |
|---|---|---|---|---|---|
| DN | DE | DK | DG | N | Ø |
| 25 | 115 | 85 | 65 | 4 | 14 |
| 32 | 140 | 100 | 76 | 4 | 19 |
| 40 | 150 | 110 | 84 | 4 | 19 |

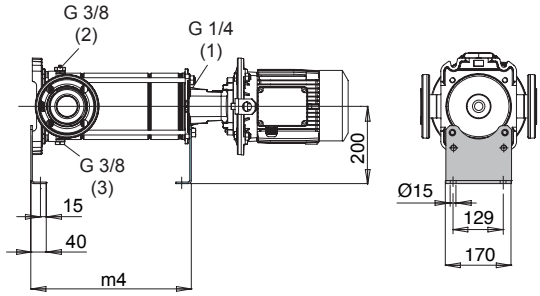


(1) Filling and air vent (2) Air vent suction side (3) Draining (4) Standard position of terminal box. (for other positions rotate motor through 90° or 180°) (5) MXV (H) : + 3 kg (6) With standard motor (7) Net weight

### Data also valid for MXVL (1.4401 EN 10088 (AISI 316))

| TYPE | Motor | | mm | | | | | | | | | | | | | | | | | Kg |
|---|---|---|---|---|---|---|---|---|---|---|---|---|---|---|---|---|---|---|---|---|
| | kW | HP | DN1 | DN2 | M | fM | P | AD | AG | AL | a | h1 | f | g1 | n1 | n2 | m1 | m2 | s | (5) |
| MXV EI 25-304 | 0,75 | 1 | 25 | 25 | 255 | 637.5 | 200 | 286 | 190 | 105 | 250 | 75 | 382.5 | 35.5 | 205 | 180 | 165 | 100 | 13 | 36.8 |
| MXV EI 25-305 | 0,75 | 1 | 25 | 25 | 255 | 661.5 | 200 | 286 | 190 | 105 | 250 | 75 | 406.5 | 35.5 | 205 | 180 | 165 | 100 | 13 | - |
| MXV EI 25-306 | 1,1 | 1,5 | 25 | 25 | 255 | 685.5 | 200 | 286 | 190 | 105 | 250 | 75 | 430.5 | 35.5 | 205 | 180 | 165 | 100 | 13 | - |
| MXV EI 25-307 | 1,1 | 1,5 | 25 | 25 | 255 | 709.5 | 200 | 286 | 190 | 105 | 250 | 75 | 454.5 | 35.5 | 205 | 180 | 165 | 100 | 13 | 41.3 |
| MXV EI 25-308 | 1,5 | 2 | 25 | 25 | 255 | 733.5 | 200 | 286 | 190 | 105 | 250 | 75 | 478.5 | 35.5 | 205 | 180 | 165 | 100 | 13 | 43.4 |
| MXV EI 25-310 | 1,5 | 2 | 25 | 25 | 255 | 782 | 200 | 286 | 190 | 105 | 250 | 75 | 527 | 35.5 | 205 | 180 | 165 | 100 | 13 | 49 |
| MXV EI 25-312 | 2,2 | 3 | 25 | 25 | 295 | 870.5 | 200 | 286 | 210 | 118 | 250 | 75 | 575.5 | 35.5 | 205 | 180 | 165 | 100 | 13 | - |
| MXV EI 25-314 | 2,2 | 3 | 25 | 25 | 295 | 918.5 | 200 | 286 | 210 | 118 | 250 | 75 | 623.5 | 35.5 | 205 | 180 | 165 | 100 | 13 | 52.1 |
| MXV EI 25-316 | 3 | 4 | 25 | 25 | 316 | 988 | 250 | 294 | 210 | 118 | 250 | 75 | 672 | 35.5 | 205 | 180 | 165 | 100 | 13 | 61.5 |
| MXV EI 32-504 | 1,1 | 1,5 | 32 | 32 | 255 | 637.5 | 200 | 286 | 190 | 105 | 250 | 75 | 382.5 | 35.5 | 205 | 180 | 165 | 100 | 13 | 42.2 |
| MXV EI 32-505 | 1,1 | 1,5 | 32 | 32 | 255 | 661.5 | 200 | 286 | 190 | 105 | 250 | 75 | 406.5 | 35.5 | 205 | 180 | 165 | 100 | 13 | 43 |
| MXV EI 32-506 | 1,5 | 2 | 32 | 32 | 255 | 685.5 | 200 | 286 | 190 | 105 | 250 | 75 | 430.5 | 35.5 | 205 | 180 | 165 | 100 | 13 | 43.5 |
| MXV EI 32-507 | 1,5 | 2 | 32 | 32 | 255 | 709.5 | 200 | 286 | 190 | 105 | 250 | 75 | 454.5 | 35.5 | 205 | 180 | 165 | 100 | 13 | 43.8 |
| MXV EI 32-508 | 2,2 | 3 | 32 | 32 | 295 | 773.5 | 200 | 286 | 210 | 118 | 250 | 75 | 478.5 | 35.5 | 205 | 180 | 165 | 100 | 13 | 49 |
| MXV EI 32-510 | 2,2 | 3 | 32 | 32 | 295 | 822 | 200 | 286 | 210 | 118 | 250 | 75 | 527 | 35.5 | 205 | 180 | 165 | 100 | 13 | 50.2 |
| MXV EI 32-512 | 3 | 4 | 32 | 32 | 311 | 886.5 | 250 | 294 | 210 | 118 | 250 | 75 | 575.5 | 35.5 | 205 | 180 | 165 | 100 | 13 | 60 |
| MXV EI 32-514 | 3 | 4 | 32 | 32 | 311 | 934.5 | 250 | 294 | 210 | 118 | 250 | 75 | 623.5 | 35.5 | 205 | 180 | 165 | 100 | 13 | 64.2 |
| MXV EI 32-516 | 4 | 5,5 | 32 | 32 | 311 | 983 | 250 | 294 | 210 | 118 | 250 | 75 | 672 | 35.5 | 205 | 180 | 165 | 100 | 13 | 70 |
| MXV EI 40-904 | 1,5 | 2 | 40 | 40 | 255 | 666.5 | 200 | 286 | 190 | 105 | 280 | 80 | 411.5 | 30.5 | 250 | 215 | 190 | 130 | 14 | 44.6 |
| MXV EI 40-905 | 2,2 | 3 | 40 | 40 | 295 | 736.5 | 200 | 286 | 210 | 118 | 280 | 80 | 441.5 | 30.5 | 250 | 215 | 190 | 130 | 14 | 49.5 |
| MXV EI 40-906 | 2,2 | 3 | 40 | 40 | 295 | 766.5 | 200 | 286 | 210 | 118 | 280 | 80 | 471.5 | 30.5 | 250 | 215 | 190 | 130 | 14 | 50.3 |
| MXV EI 40-907 | 3 | 4 | 40 | 40 | 311 | 812.5 | 250 | 294 | 210 | 118 | 280 | 80 | 501.5 | 30.5 | 250 | 215 | 190 | 130 | 14 | - |
| MXV EI 40-908 | 3 | 4 | 40 | 40 | 311 | 843 | 250 | 294 | 210 | 118 | 280 | 80 | 532 | 30.5 | 250 | 215 | 190 | 130 | 14 | 59.5 |
| MXV EI 40-910 | 4 | 5,5 | 40 | 40 | 311 | 903 | 250 | 294 | 210 | 118 | 280 | 80 | 592 | 30.5 | 250 | 215 | 190 | 130 | 14 | 64 |
| MXV EI 40-911 | 4 | 5,5 | 40 | 40 | 311 | 373 | 250 | 294 | 210 | 118 | 280 | 80 | 622 | 30.5 | 250 | 215 | 190 | 130 | 14 | 65.6 |
| MXV EI 40-913 | 5,5 | 7,5 | 40 | 40 | 339 | 1108.5 | 250 | 321 | 210 | 118 | 280 | 80 | 769.5 | 30.5 | 250 | 215 | 190 | 130 | 14 | - |
| MXV EI 40-915 | 5,5 | 7,5 | 40 | 40 | 339 | 1169 | 300 | 321 | 210 | 118 | 280 | 80 | 830 | 30.5 | 250 | 215 | 190 | 130 | 14 | 94.7 |

MXV

calpeda

## Dimensions and weights

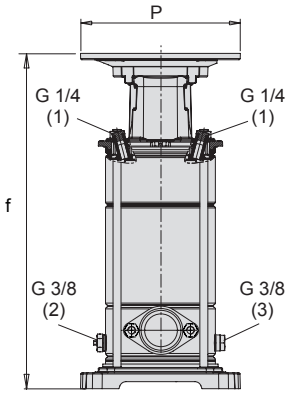


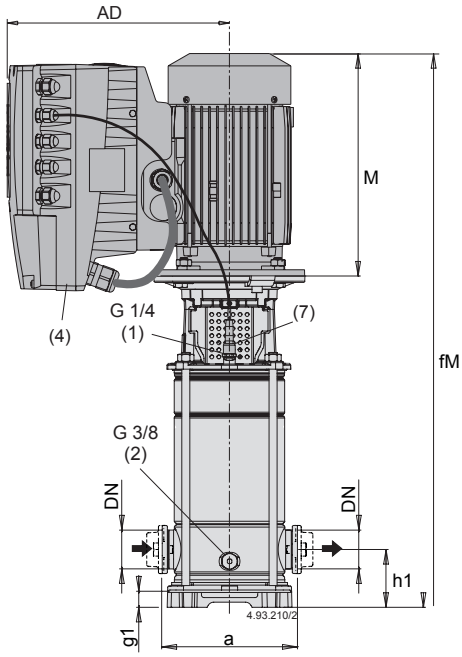


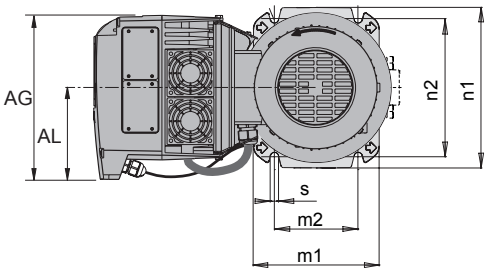


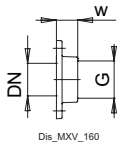


### Oval Counterflanges PN 16

| | | | Holes | |
|---|---|---|---|---|
| DN | G | w | N. | Ø |
| 25 | 1 | 23 | 2 | 12 |
| 32 | 1 1/4 | 23 | 2 | 12 |
| 40 | 1 1/2 | 26 | 2 | 15 |

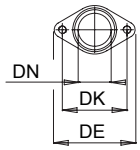


### Oval Flanges PN 16

| | | | Holes | |
|---|---|---|---|---|
| DN | DE | DK | N | Ø |
| 25 | 95 | 75 | 2 | M10 |
| 32 | 95 | 75 | 2 | M10 |
| 40 | 125 | 100 | 2 | M12 |

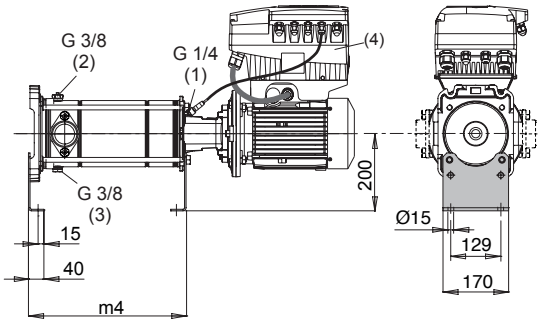


(1) Filling and air vent (2) Air vent suction side (3) Draining (4) Standard position of terminal box. (for other positions rotate motor through 90° or 180°) (5) MXV (H) : + 3 kg (6) With standard motor (7) Net weight

### Data also valid for MXVL (1.4401 EN 10088 (AISI 316))

| TYPE | Motor | | mm | | | | | | | | | | | | | | | | | Kg |
|---|---|---|---|---|---|---|---|---|---|---|---|---|---|---|---|---|---|---|---|---|
| | kW | HP | DN1 | DN2 | M | fM | P | AD | AG | AL | a | h1 | f | g1 | n1 | n2 | m1 | m2 | s | (5) |
| MXV EI 25-304 O | 0,75 | 1 | 25 | 25 | 255 | 622 | 200 | 286 | 190 | 105 | 160 | 50 | 367 | 20 | 205 | 180 | 165 | 100 | 13 | - |
| MXV EI 25-305 O | 0,75 | 1 | 25 | 25 | 255 | 646 | 200 | 286 | 190 | 105 | 160 | 50 | 391 | 20 | 205 | 180 | 165 | 100 | 13 | - |
| MXV EI 25-306 O | 1,1 | 1,5 | 25 | 25 | 255 | 670 | 200 | 286 | 190 | 105 | 160 | 50 | 415 | 20 | 205 | 180 | 165 | 100 | 13 | - |
| MXV EI 25-307 O | 1,1 | 1,5 | 25 | 25 | 255 | 694 | 200 | 286 | 190 | 105 | 160 | 50 | 439 | 20 | 205 | 180 | 165 | 100 | 13 | 38.5 |
| MXV EI 25-308 O | 1,5 | 2 | 25 | 25 | 255 | 718 | 200 | 286 | 190 | 105 | 160 | 50 | 463 | 20 | 205 | 180 | 165 | 100 | 13 | 40.4 |
| MXV EI 25-310 O | 1,5 | 2 | 25 | 25 | 255 | 766.5 | 200 | 286 | 190 | 105 | 160 | 50 | 511.5 | 20 | 205 | 180 | 165 | 100 | 13 | 42.6 |
| MXV EI 25-312 O | 2,2 | 3 | 25 | 25 | 295 | 855 | 200 | 286 | 190 | 105 | 160 | 50 | 560 | 20 | 205 | 180 | 165 | 100 | 13 | 53 |
| MXV EI 25-314 O | 2,2 | 3 | 25 | 25 | 295 | 903 | 200 | 286 | 190 | 105 | 160 | 50 | 608 | 20 | 205 | 180 | 165 | 100 | 13 | - |
| MXV EI 32-504 O | 1,1 | 1,5 | 32 | 32 | 255 | 622 | 200 | 286 | 190 | 105 | 160 | 50 | 367 | 20 | 205 | 180 | 165 | 100 | 13 | - |
| MXV EI 32-505 O | 1,1 | 1,5 | 32 | 32 | 255 | 946 | 200 | 286 | 190 | 105 | 160 | 50 | 391 | 20 | 205 | 180 | 165 | 100 | 13 | 36.9 |
| MXV EI 32-506 O | 1,5 | 2 | 32 | 32 | 255 | 670 | 200 | 286 | 190 | 105 | 160 | 50 | 415 | 20 | 205 | 180 | 165 | 100 | 13 | 41 |
| MXV EI 32-507 O | 1,5 | 2 | 32 | 32 | 255 | 694 | 200 | 286 | 190 | 105 | 160 | 50 | 439 | 20 | 205 | 180 | 165 | 100 | 13 | - |
| MXV EI 32-508 O | 2,2 | 3 | 32 | 32 | 295 | 758 | 200 | 286 | 210 | 118 | 160 | 50 | 463 | 20 | 205 | 180 | 165 | 100 | 13 | - |
| MXV EI 32-510 O | 2,2 | 3 | 32 | 32 | 295 | 806.5 | 200 | 286 | 210 | 118 | 160 | 50 | 511.5 | 20 | 205 | 180 | 165 | 100 | 13 | 46.5 |
| MXV EI 32-512 O | 3 | 4 | 32 | 32 | 311 | 871 | 250 | 294 | 210 | 118 | 160 | 50 | 560 | 20 | 205 | 180 | 165 | 100 | 13 | - |
| MXV EI 32-514 O | 3 | 4 | 32 | 32 | 311 | 919 | 250 | 294 | 210 | 118 | 160 | 50 | 608 | 35.5 | 205 | 180 | 165 | 100 | 13 | 57 |
| MXV EI 40-904 O | 1,5 | 2 | 40 | 40 | 255 | 666.5 | 200 | 286 | 190 | 105 | 200 | 80 | 411.5 | 30.5 | 250 | 215 | 190 | 130 | 14 | 41.3 |
| MXV EI 40-905 O | 2,2 | 3 | 40 | 40 | 295 | 736.5 | 200 | 286 | 210 | 118 | 200 | 80 | 441.5 | 30.5 | 250 | 215 | 190 | 130 | 14 | - |
| MXV EI 40-906 O | 2,2 | 3 | 40 | 40 | 295 | 766.5 | 200 | 286 | 210 | 118 | 200 | 80 | 471.5 | 30.5 | 250 | 215 | 190 | 130 | 14 | 51 |
| MXV EI 40-907 O | 3 | 4 | 40 | 40 | 311 | 812.5 | 250 | 294 | 210 | 118 | 200 | 80 | 501.5 | 30.5 | 250 | 215 | 190 | 130 | 14 | 60.5 |
| MXV EI 40-908 O | 3 | 4 | 40 | 40 | 311 | 843 | 250 | 294 | 210 | 118 | 200 | 80 | 532 | 30.5 | 250 | 215 | 190 | 130 | 14 | - |
| MXV EI 40-910 O | 4 | 5,5 | 40 | 40 | 311 | 903 | 250 | 294 | 210 | 118 | 200 | 80 | 592 | 30.5 | 250 | 215 | 190 | 130 | 14 | - |
| MXV EI 40-911 O | 4 | 5,5 | 40 | 40 | 311 | 933 | 250 | 294 | 210 | 118 | 200 | 80 | 622 | 30.5 | 250 | 215 | 190 | 130 | 14 | - |
| MXV EI 40-913 O | 5,5 | 7,5 | 40 | 40 | 339 | 1108.5 | 300 | 321 | 210 | 118 | 200 | 80 | 769.5 | 30.5 | 250 | 215 | 190 | 130 | 14 | - |

MXV

calpeda

## Dimensions and weights

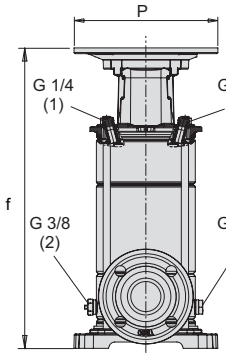


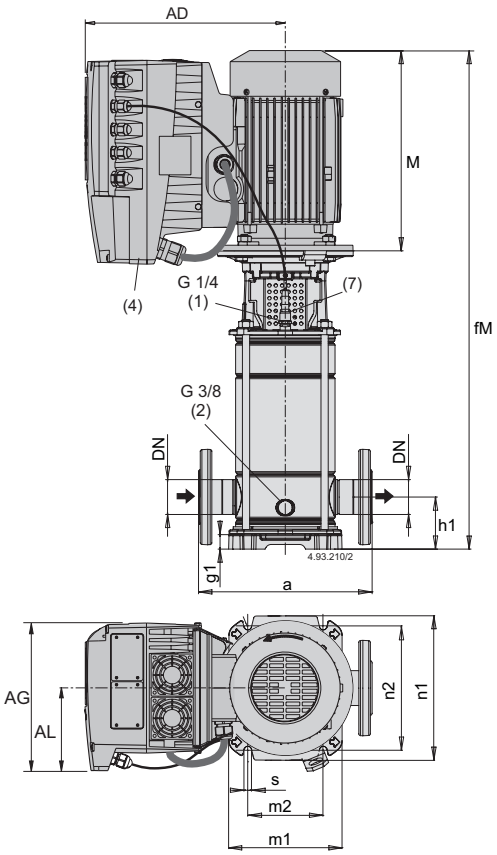


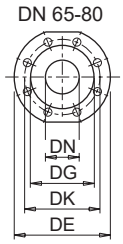


**Flanges EN 1092-2**

| | | | | Holes | |
|---|---|---|---|---|---|
| DN | DE | DK | DG | N | Ø |
| 65 | 185 | 145 | 118 | 8 | 19 |
| 80 | 200 | 160 | 132 | 8 | 19 |

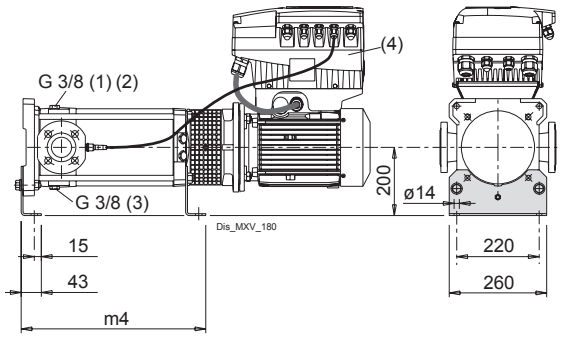


(1) Filling and air vent (2) Air vent suction side (3) Draining (4) Standard position of terminal box. (for other positions rotate motor through 90° or 180°) (5) MXV (H) : + 3 kg (6) With standard motor (7) Net weight

### Data also valid for MXVL (1.4401 EN 10088 (AISI 316))

| TYPE | Motor | | mm | | | | | | | | | | | | | | | | | | Kg |
|---|---|---|---|---|---|---|---|---|---|---|---|---|---|---|---|---|---|---|---|---|---|
| | kW | HP | DN1 | DN2 | M | fM | P | AD | AG | AL | a | h1 | f | g1 | n1 | n2 | m1 | m2 | m4 | s | (5) |
| MXV EI 50-1502 | 1,5 | 2 | 50 | 50 | 295 | 733 | 200 | 286 | 190 | 105 | 300 | 90 | 438 | 25 | 250 | 215 | 196 | 130 | 349 | 13 | - |
| MXV EI 50-1503/A | 2,2 | 3 | 50 | 50 | 295 | 781 | 200 | 286 | 210 | 118 | 300 | 90 | 486 | 25 | 250 | 215 | 196 | 130 | 397 | 13 | - |
| MXV EI 50-1504 | 3 | 4 | 50 | 50 | 311 | 845 | 250 | 294 | 210 | 118 | 300 | 90 | 534 | 25 | 250 | 215 | 196 | 130 | 445 | 13 | 64.4 |
| MXV EI 50-1505 | 4 | 5,5 | 50 | 50 | 311 | 893 | 250 | 294 | 210 | 118 | 300 | 90 | 582 | 25 | 250 | 215 | 196 | 130 | 493 | 13 | 68.5 |
| MXV EI 50-1506 | 5,5 | 7,5 | 50 | 50 | 339 | 1032 | 300 | 321 | 210 | 118 | 300 | 90 | 693 | 25 | 250 | 215 | 196 | 130 | 541 | 13 | 94.8 |
| MXV EI 50-1507 | 5,5 | 7,5 | 50 | 50 | 339 | 1080 | 300 | 321 | 210 | 118 | 300 | 90 | 741 | 25 | 250 | 215 | 196 | 130 | 589 | 13 | 96.8 |
| MXV EI 50-1508/A | 5,5 | 7,5 | 50 | 50 | 339 | 1128 | 300 | 321 | 210 | 118 | 300 | 90 | 789 | 25 | 250 | 215 | 196 | 130 | 637 | 13 | 98.3 |
| MXV EI 50-1509 | 7,5 | 10 | 50 | 50 | 339 | 1176 | 300 | 368 | 281 | 153 | 300 | 90 | 837 | 25 | 250 | 215 | 196 | 130 | 685 | 13 | 112.7 |
| MXV EI 50-1510 | 7,5 | 10 | 50 | 50 | 339 | 1224 | 300 | 368 | 281 | 153 | 300 | 90 | 885 | 25 | 250 | 215 | 196 | 130 | 733 | 13 | 114.5 |
| MXV EI 50-1511 | 9,2 | 12,5 | 50 | 50 | 413 | 1376 | 350 | 393 | 281 | 153 | 300 | 90 | 963 | 25 | 250 | 215 | 196 | 130 | 781 | 13 | 150.3 |
| MXV EI 50-1512 | 9,2 | 12,5 | 50 | 50 | 413 | 1424 | 350 | 393 | 281 | 153 | 300 | 90 | 1011 | 25 | 250 | 215 | 196 | 130 | 829 | 13 | 146.5 |
| MXV EI 50-1513 | 11 | 15 | 50 | 50 | 459 | 1518 | 350 | 393 | 281 | 153 | 300 | 90 | 1059 | 25 | 250 | 215 | 196 | 130 | 877 | 13 | - |
| MXV EI 50-1514 | 11 | 15 | 50 | 50 | 459 | 1566 | 350 | 393 | 281 | 153 | 300 | 90 | 1107 | 25 | 250 | 215 | 196 | 130 | 925 | 13 | - |
| MXV EI 50-1515 | 11 | 15 | 50 | 50 | 459 | 1614 | 350 | 393 | 281 | 153 | 300 | 90 | 1155 | 25 | 250 | 215 | 196 | 130 | 973 | 13 | 158.5 |
| MXV EI 50-1516 | 15 | 20 | 50 | 50 | 484 | 1687 | 350 | 471 | 350 | 190 | 300 | 90 | 1203 | 25 | 250 | 215 | 196 | 130 | 1021 | 13 | - |
| MXV EI 50-1517 | 15 | 20 | 50 | 50 | 484 | 1735 | 350 | 471 | 350 | 190 | 300 | 90 | 1251 | 25 | 250 | 215 | 196 | 130 | 1069 | 13 | 218 |
| MXV EI 50-2002 | 2,2 | 3 | 50 | 50 | 295 | 733 | 200 | 286 | 210 | 118 | 300 | 90 | 438 | 25 | 250 | 215 | 196 | 130 | 349 | 13 | 54.1 |
| MXV EI 50-2003 | 3 | 4 | 50 | 50 | 311 | 797 | 250 | 294 | 210 | 118 | 300 | 90 | 486 | 25 | 250 | 215 | 196 | 130 | 397 | 13 | 62.2 |
| MXV EI 50-2004 | 4 | 5,5 | 50 | 50 | 311 | 832 | 250 | 294 | 210 | 118 | 300 | 90 | 521 | 25 | 250 | 215 | 196 | 130 | 445 | 13 | 66.8 |
| MXV EI 50-2005 | 5,5 | 7,5 | 50 | 50 | 339 | 984 | 300 | 321 | 210 | 118 | 300 | 90 | 645 | 25 | 250 | 215 | 196 | 130 | 493 | 13 | 93.4 |
| MXV EI 50-2006 | 7,5 | 10 | 50 | 50 | 339 | 1032 | 300 | 368 | 281 | 153 | 300 | 90 | 693 | 25 | 250 | 215 | 196 | 130 | 541 | 13 | 108 |
| MXV EI 50-2007 | 7,5 | 10 | 50 | 50 | 339 | 1080 | 300 | 368 | 281 | 153 | 300 | 90 | 741 | 25 | 250 | 215 | 196 | 130 | 589 | 13 | 109.3 |
| MXV EI 50-2008 | 9,2 | 12,5 | 50 | 50 | 413 | 1232 | 350 | 393 | 281 | 153 | 300 | 90 | 819 | 25 | 250 | 215 | 196 | 130 | 601 | 13 | 140 |
| MXV EI 50-2009 | 9,2 | 12,5 | 50 | 50 | 413 | 1280 | 350 | 393 | 281 | 153 | 300 | 90 | 867 | 25 | 250 | 215 | 196 | 130 | 685 | 13 | 142 |
| MXV EI 50-2010 | 11 | 15 | 50 | 50 | 459 | 1374 | 350 | 393 | 281 | 153 | 300 | 90 | 915 | 25 | 250 | 215 | 196 | 130 | 733 | 13 | - |
| MXV EI 50-2011 | 11 | 15 | 50 | 50 | 459 | 1422 | 350 | 393 | 281 | 153 | 300 | 90 | 963 | 25 | 250 | 215 | 196 | 130 | 781 | 13 | 153.4 |
| MXV EI 50-2012 | 15 | 20 | 50 | 50 | 484 | 1495 | 350 | 471 | 350 | 190 | 300 | 90 | 1011 | 25 | 250 | 215 | 196 | 130 | 829 | 13 | - |
| MXV EI 50-2013 | 15 | 20 | 50 | 50 | 484 | 1543 | 350 | 471 | 350 | 190 | 300 | 90 | 1059 | 25 | 250 | 215 | 196 | 130 | 877 | 13 | - |
| MXV EI 50-2014 | 15 | 20 | 50 | 50 | 484 | 1591 | 350 | 471 | 350 | 190 | 300 | 90 | 1107 | 25 | 250 | 215 | 196 | 130 | 925 | 13 | - |
| MXV EI 50-2015 | 15 | 20 | 50 | 50 | 484 | 1639 | 350 | 471 | 350 | 190 | 300 | 90 | 1155 | 25 | 250 | 215 | 196 | 130 | 973 | 13 | - |
| MXV EI 50-2016 | 18,5 | 25 | 50 | 50 | 484 | 1687 | 350 | 491 | 350 | 190 | 300 | 90 | 1203 | 25 | 250 | 215 | 196 | 130 | 1021 | 13 | - |

MXV

calpeda

## Dimensions and weights

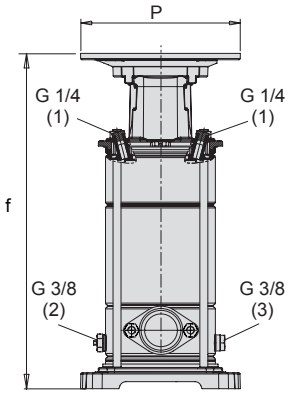


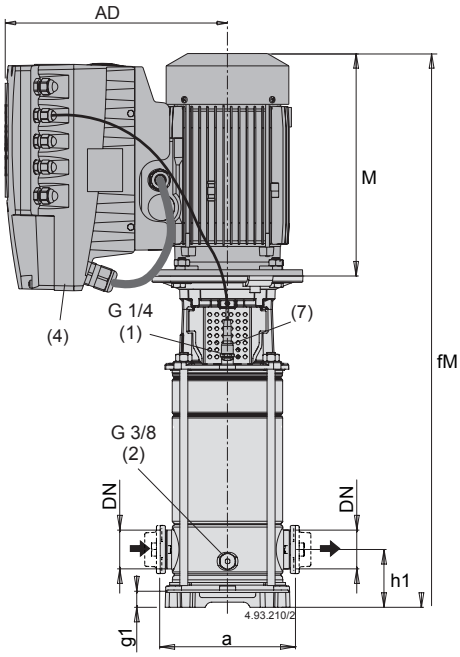


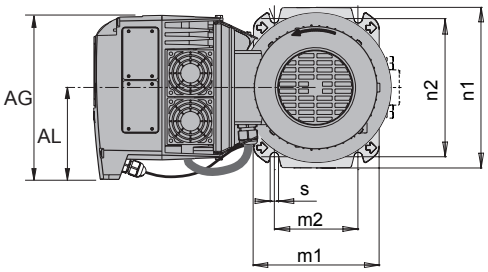


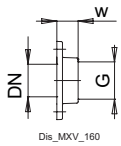


### Oval Counterflanges PN 16

| | | | Holes | |
|---|---|---|---|---|
| DN | G | w | N. | Ø |
| 50 | 2 | 34 | 2 | 15 |

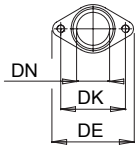


### Oval Flanges PN 16

| | | | Holes | |
|---|---|---|---|---|
| DN | DE | DK | N. | Ø |
| 50 | 130 | 100 | 2 | M12 |

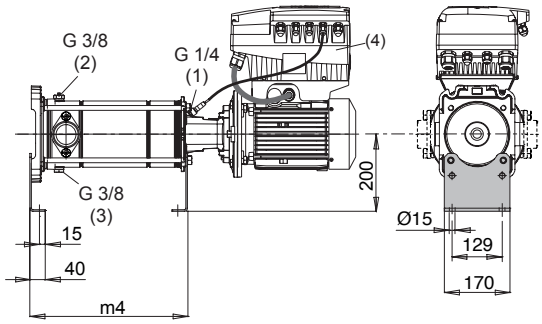


(1) Filling and air vent (2) Air vent suction side (3) Draining (4) Standard position of terminal box. (for other positions rotate motor through 90° or 180°) (5) MXV (H) : + 3 kg (6) With standard motor (7) Net weight

### Data also valid for MXVL (1.4401 EN 10088 (AISI 316))

| TYPE | Motor | | mm | | | | | | | | | | | | | | | | | | Kg |
|---|---|---|---|---|---|---|---|---|---|---|---|---|---|---|---|---|---|---|---|---|---|
| | kW | HP | DN1 | DN2 | M | fM | P | AD | AG | AL | a | h1 | f | g1 | n1 | n2 | m1 | m2 | m4 | s | (5) |
| MXV EI 50-1502 O | 1,5 | 2 | 50 | 50 | 295 | 733 | 200 | 286 | 190 | 105 | 200 | 90 | 438 | 25 | 250 | 215 | 196 | 130 | 349 | 13 | - |
| MXV EI 50-1503/A O | 2,2 | 3 | 50 | 50 | 295 | 781 | 200 | 286 | 210 | 118 | 200 | 90 | 486 | 25 | 250 | 215 | 196 | 130 | 397 | 13 | - |
| MXV EI 50-1504 O | 3 | 4 | 50 | 50 | 311 | 845 | 250 | 294 | 210 | 118 | 200 | 90 | 534 | 25 | 250 | 215 | 196 | 130 | 445 | 13 | - |
| MXV EI 50-1505 O | 4 | 5,5 | 50 | 50 | 311 | 893 | 250 | 294 | 210 | 118 | 200 | 90 | 582 | 25 | 250 | 215 | 196 | 130 | 457 | 13 | 64.4 |
| MXV EI 50-1506 O | 5,5 | 7,5 | 50 | 50 | 339 | 1032 | 300 | 321 | 210 | 118 | 200 | 90 | 693 | 25 | 250 | 215 | 196 | 130 | 541 | 13 | - |
| MXV EI 50-1507 O | 5,5 | 7,5 | 50 | 50 | 339 | 1080 | 300 | 321 | 210 | 118 | 200 | 90 | 741 | 25 | 250 | 215 | 196 | 130 | 589 | 13 | - |
| MXV EI 50-1508/A O | 5,5 | 7,5 | 50 | 50 | 339 | 1128 | 300 | 321 | 210 | 118 | 200 | 90 | 789 | 25 | 250 | 215 | 196 | 130 | 637 | 13 | - |
| MXV EI 50-1509 O | 7,5 | 10 | 50 | 50 | 339 | 1176 | 300 | 368 | 281 | 153 | 200 | 90 | 837 | 25 | 250 | 215 | 196 | 130 | 685 | 13 | - |
| MXV EI 50-1510 O | 7,5 | 10 | 50 | 50 | 339 | 1224 | 300 | 368 | 281 | 153 | 200 | 90 | 885 | 25 | 250 | 215 | 196 | 130 | 733 | 13 | - |
| MXV EI 50-2002 O | 2,2 | 3 | 50 | 50 | 295 | 733 | 200 | 286 | 210 | 118 | 200 | 90 | 438 | 25 | 250 | 215 | 196 | 130 | 349 | 13 | - |
| MXV EI 50-2003 O | 3 | 4 | 50 | 50 | 311 | 797 | 250 | 294 | 210 | 118 | 200 | 90 | 486 | 25 | 250 | 215 | 196 | 130 | 397 | 13 | - |
| MXV EI 50-2004 O | 4 | 5,5 | 50 | 50 | 311 | 832 | 250 | 294 | 210 | 118 | 200 | 90 | 521 | 25 | 250 | 215 | 196 | 130 | 445 | 13 | - |
| MXV EI 50-2005 O | 5,5 | 7,5 | 50 | 50 | 339 | 984 | 300 | 321 | 210 | 118 | 200 | 90 | 645 | 25 | 250 | 215 | 196 | 130 | 493 | 13 | - |
| MXV EI 50-2006 O | 7,5 | 10 | 50 | 50 | 339 | 1032 | 300 | 368 | 281 | 153 | 200 | 90 | 693 | 25 | 250 | 215 | 196 | 130 | 541 | 13 | - |
| MXV EI 50-2007 O | 7,5 | 10 | 50 | 50 | 339 | 1080 | 300 | 368 | 281 | 153 | 200 | 90 | 741 | 25 | 250 | 215 | 196 | 130 | 589 | 13 | - |
| MXV EI 50-2008 O | 9,2 | 12,5 | 50 | 50 | 413 | 1232 | 350 | 393 | 281 | 153 | 200 | 90 | 819 | 25 | 250 | 215 | 196 | 130 | 637 | 13 | - |
| MXV EI 50-2009 O | 9,2 | 12,5 | 50 | 50 | 413 | 1280 | 350 | 393 | 281 | 153 | 200 | 90 | 867 | 25 | 250 | 215 | 196 | 130 | 685 | 13 | - |
| MXV EI 50-2010 O | 11 | 15 | 50 | 50 | 459 | 1374 | 350 | 393 | 281 | 153 | 200 | 90 | 915 | 25 | 250 | 215 | 196 | 130 | 733 | 13 | - |

MXV

calpeda

## Dimensions and weights

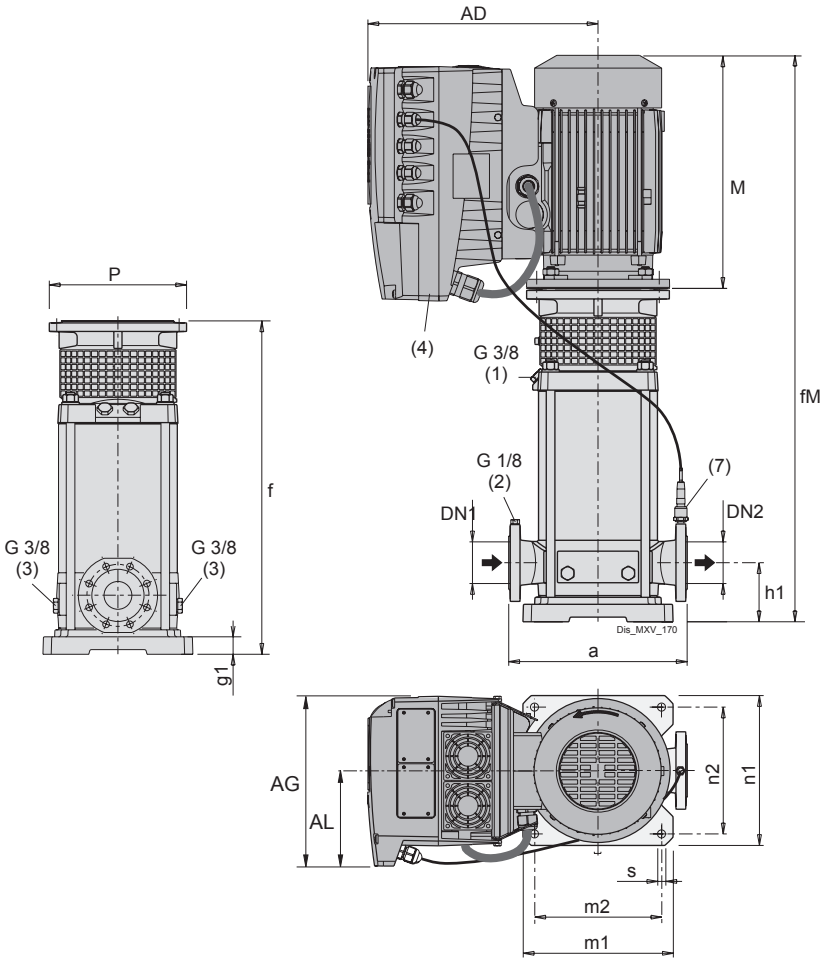


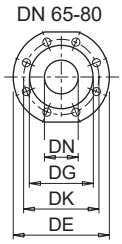


**Flanges EN 1092-2**

| | | | | Holes | |
|---|---|---|---|---|---|
| DN | DE | DK | DG | N | Ø |
| 65 | 185 | 145 | 118 | 8 | 19 |
| 80 | 200 | 160 | 132 | 8 | 19 |

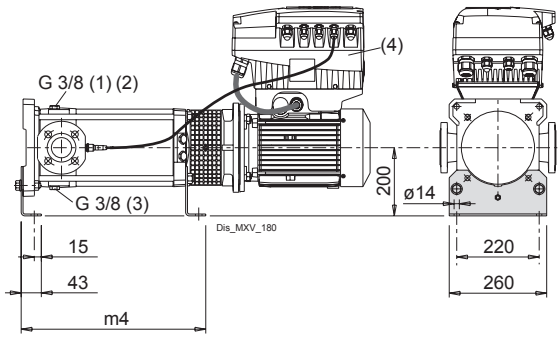


(1) Filling and air vent (2) Air vent suction side (3) Draining (4) Standard position of terminal box. (for other positions rotate motor through 90° or 180°) (5) MXV (H) : + 3 kg (6) With standard motor (7) Net weight

### Data also valid for MXVL (1.4401 EN 10088 (AISI 316))

| TYPE | Motor | | mm | | | | | | | | | | | | | | | | | | Kg |
|---|---|---|---|---|---|---|---|---|---|---|---|---|---|---|---|---|---|---|---|---|---|
| | kW | HP | DN1 | DN2 | M | fM | P | AD | AG | AL | a | h1 | f | g1 | n1 | n2 | m1 | m2 | m4 | s | (5) |
| MXV EI 65-3202/D | 4 | 5,5 | 65 | 65 | 311 | 718 | 250 | 294 | 210 | 118 | 320 | 105 | 407 | 35 | 260 | 220 | 260 | 220 | 334 | 14 | 79.3 |
| MXV EI 65-3203/C | 5,5 | 7,5 | 65 | 65 | 339 | 812 | 300 | 321 | 210 | 118 | 320 | 105 | 473 | 35 | 260 | 220 | 260 | 220 | 380 | 14 | 100 |
| MXV EI 65-3204/C | 7,5 | 10 | 65 | 65 | 339 | 858 | 300 | 368 | 281 | 153 | 320 | 105 | 519 | 35 | 260 | 220 | 260 | 220 | 426 | 14 | 115 |
| MXV EI 65-3205/D | 11 | 15 | 65 | 65 | 459 | 1054 | 350 | 393 | 281 | 153 | 320 | 105 | 595 | 35 | 260 | 220 | 260 | 220 | 472 | 14 | 157 |
| MXV EI 65-3206/D | 11 | 15 | 65 | 65 | 459 | 1100 | 350 | 393 | 281 | 153 | 320 | 105 | 641 | 35 | 260 | 220 | 260 | 220 | 518 | 14 | 168 |
| MXV EI 65-3207/D | 15 | 20 | 65 | 65 | 484 | 1171 | 350 | 471 | 350 | 190 | 320 | 105 | 687 | 35 | 260 | 220 | 260 | 220 | 564 | 14 | - |
| MXV EI 65-3208/D | 15 | 20 | 65 | 65 | 484 | 1217 | 350 | 471 | 350 | 190 | 320 | 105 | 733 | 35 | 260 | 220 | 260 | 220 | 610 | 14 | 221.5 |
| MXV EI 65-3209/E | 18,5 | 25 | 65 | 65 | 538 | 1317 | 350 | 491 | 350 | 190 | 320 | 105 | 779 | 35 | 260 | 220 | 260 | 220 | 656 | 14 | 229 |
| MXV EI 65-3210/E | 18,5 | 25 | 65 | 65 | 538 | 1363 | 350 | 491 | 350 | 190 | 320 | 105 | 825 | 35 | 260 | 220 | 260 | 220 | 702 | 14 | - |
| MXV EI 65-3212/D | 22 | 30 | 65 | 65 | 538 | 1455 | 350 | 491 | 350 | 190 | 320 | 105 | 917 | 35 | 260 | 220 | 260 | 220 | 794 | 14 | - |
| MXV EI 80-4802/C | 5,5 | 7,5 | 80 | 80 | 339 | 805 | 300 | 321 | 210 | 118 | 320 | 105 | 466 | 35 | 260 | 220 | 260 | 220 | 373 | 14 | 101.8 |
| MXV EI 80-4803/C | 7,5 | 10 | 80 | 80 | 339 | 866 | 300 | 368 | 281 | 153 | 320 | 105 | 527 | 35 | 260 | 220 | 260 | 220 | 434 | 14 | 120 |
| MXV EI 80-4804/D | 11 | 15 | 80 | 80 | 459 | 1077 | 350 | 393 | 281 | 153 | 320 | 105 | 618 | 35 | 260 | 220 | 260 | 220 | 495 | 14 | 169 |
| MXV EI 80-4805/D | 15 | 20 | 80 | 80 | 484 | 1164 | 350 | 471 | 350 | 190 | 320 | 105 | 680 | 35 | 260 | 220 | 260 | 220 | 557 | 14 | 205 |
| MXV EI 80-4806/D | 15 | 20 | 80 | 80 | 484 | 1225 | 350 | 471 | 350 | 190 | 320 | 105 | 741 | 35 | 260 | 220 | 260 | 220 | 618 | 14 | 202 |
| MXV EI 80-4807/E | 18,5 | 25 | 80 | 80 | 538 | 1340 | 350 | 491 | 350 | 190 | 320 | 105 | 802 | 35 | 260 | 220 | 260 | 220 | 679 | 14 | - |
| MXV EI 80-4808/D | 22 | 30 | 80 | 80 | 538 | 1402 | 350 | 491 | 350 | 190 | 320 | 105 | 864 | 35 | 260 | 220 | 260 | 220 | 741 | 14 | - |

MXV

calpeda

## Dimensions and weights

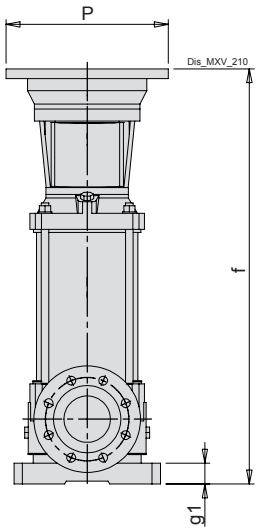


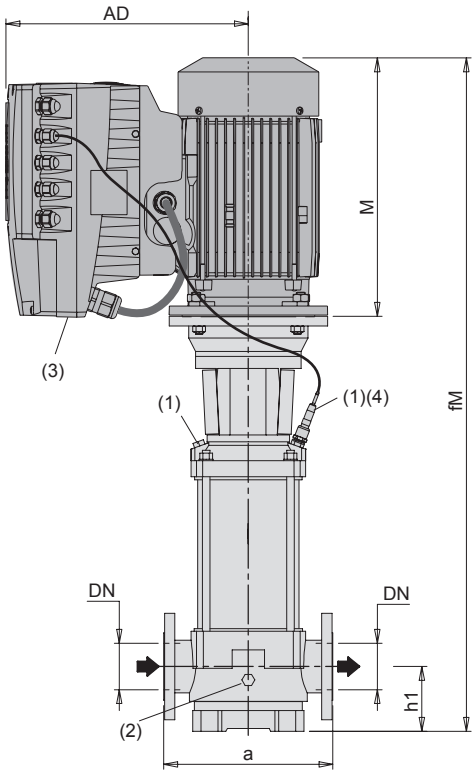


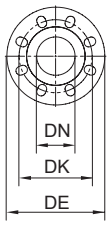


**Flanges EN 1092-2**

| | | | | Holes | |
|---|---|---|---|---|---|
| DN | PN | DE | DK | N | Ø |
| 100 | 16 | 230 | 180 | 8 | 19 |
| 100 | 25 | 225 | 190 | 8 | 23 |

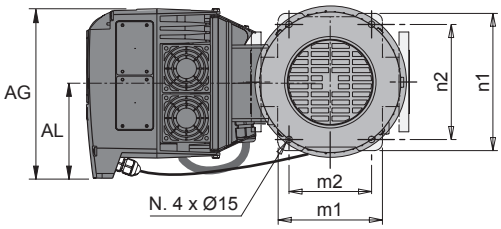


(1) Filling and Air vent | (2) Draining | (3) Standard position of I-MAT (for other positions rotate motor through 90° or 180°)

4 Net weight (5) transducer

### Data also valid for MXVL (1.4401 EN 10088 (AISI 316))

| TYPE | Motor | | mm | | | | | | | | | | | | | | | | | Kg |
|---|---|---|---|---|---|---|---|---|---|---|---|---|---|---|---|---|---|---|---|---|
| | kW | HP | DN1 | DN2 | M | fM | P | AD | AG | AL | a | h1 | f | g1 | n1 | n2 | m1 | m2 | s | (5) |
| MXVEI100-6501/A | 5,5 | 7,5 | 100 | 100 | 339 | 1096 | 300 | 321 | 210 | 118 | 365 | 140 | 757 | 45 | 316 | 265 | 240 | 190 | 15 | - |
| MXVEI100-6502-2R/A | 7,5 | 10 | 100 | 100 | 339 | 1188 | 300 | 368 | 281 | 153 | 365 | 140 | 849 | 45 | 316 | 265 | 240 | 190 | 15 | 149 |
| MXVEI100-6502/A | 11 | 15 | 100 | 100 | 459 | 1308 | 350 | 393 | 281 | 153 | 365 | 140 | 849 | 45 | 316 | 265 | 240 | 190 | 15 | - |
| MXVEI100-6503-2R/A | 15 | 20 | 100 | 100 | 484 | 1425 | 350 | 471 | 350 | 190 | 365 | 140 | 941 | 45 | 316 | 265 | 240 | 190 | 15 | - |
| MXVEI100-6503/B | 18,5 | 25 | 100 | 100 | 538 | 1484 | 350 | 491 | 350 | 190 | 365 | 140 | 946 | 45 | 316 | 265 | 240 | 190 | 15 | - |
| MXVEI100-6504-2R/B | 18,5 | 25 | 100 | 100 | 538 | 1576 | 350 | 491 | 350 | 190 | 365 | 140 | 1038 | 45 | 316 | 265 | 240 | 190 | 15 | 260.5 |
| MXVEI100-6504/A | 22 | 30 | 100 | 100 | 538 | 1576 | 350 | 491 | 350 | 190 | 365 | 140 | 1038 | 45 | 316 | 265 | 240 | 190 | 15 | 264.3 |
| MXVEI100-9001/A | 7,5 | 10 | 100 | 100 | 339 | 1096 | 300 | 368 | 281 | 153 | 380 | 140 | 757 | 45 | 341 | 280 | 260 | 199 | 15 | - |
| MXVEI100-9002-2R/A | 11 | 15 | 100 | 100 | 459 | 1308 | 350 | 393 | 281 | 153 | 380 | 140 | 849 | 45 | 341 | 280 | 260 | 199 | 15 | - |
| MXVEI100-9002/A | 15 | 20 | 100 | 100 | 484 | 1338 | 350 | 471 | 350 | 190 | 380 | 140 | 854 | 45 | 341 | 280 | 260 | 199 | 15 | - |
| MXVEI100-9003-2R/B | 18,5 | 25 | 100 | 100 | 538 | 1484 | 350 | 491 | 350 | 190 | 380 | 140 | 946 | 45 | 341 | 280 | 260 | 199 | 15 | - |
| MXVEI100-9003/A | 22 | 30 | 100 | 100 | 538 | 1484 | 350 | 491 | 350 | 190 | 380 | 140 | 946 | 45 | 341 | 280 | 260 | 199 | 15 | - |

ed. 03/2025

# I-MPC

calpeda®

EASY TO INSTALL
Plug And play solution

ECONOMIC SAVING
High efficiency single-phase motor

EASY TO USE
Equipped with programmable logic, the product allows programming through a simple and intuitive display.

# Self-priming swimming pool pumps boosting system with integrated control

# I-MPC

calpeda®

## Construction

Self-priming swimming pool pumps with built-in strainer and motor insulated from pumped water.
The pump is made with high quality plastic materials, corrosion and sand erosion resistant.
With stainless steel diffuser.
Base-plate kit.

## Applications

For water circulation in swimming pool filtration systems.
For clean or slightly dirty water with solids in suspension.

## Operating conditions

Liquid temperature from 0 °C to +40 °C.
Ambient temperature up to 40° C.
Maximum permissible pressure in the pump casing 2,5 bar.
Continuous duty.

## Motor

2-pole induction motor.
Nominal speed 3970 rpm
Motor: variable speed
Frequency: 50-60 Hz
Single-phase 220-240V~50Hz/220V~60Hz, with thermal protector.
H07RN-F cable, 3G1.5 mm2, length 1.5 m, with CEI-UNEL 47166 plug.
Insulation class F.
Protection IP X4.
Constructed in accordance with EN 60034-1, EN 60335-1, EN 60335-2-41.

## Features

- integrated frequency converter
- high efficiency asynchronous motor
- motor power control
- voltage and current control
- monitoring of maximum starting current

## Protections

- dry-run protection
- detects the presence of air in the pump casing
- overload control and overheating motor control
- pump blockage
- power supply control
- starts per hour control
- detects small leakages in the system

## Designation

Example: I-MPCM 31
I = Version with integrated frequency converter
MPC = Series
M = Single-phase version (no indication: three-phase)
31 = Pump type

## Materials

| Components | Materials |
|---|---|
| Pump casing | Noryl PPO-GF30 |
| Diffuser cover | Noryl PPO-GF30 |
| Impeller | Noryl PPO-GF30 |
| Strainer cover | Lexan |
| Strainer basket | Polypropylene |
| Diffuser funnel and wear-ring | Stainless Steel 1.4401 EN 10088 (AISI 316) |
| Mechanical seal | Carbon - Ceramic - FPM |

## Performance

### Single-phase

| | | | Q = Flow | | | | | | | | | |
|---|---|---|---|---|---|---|---|---|---|---|---|---|
| | | | m³/h | 0 | 2 | 4 | 6 | 8 | 10 | 12 | 14 | 16 |
| Model | 230V | P1 | l/min | | 33,3 | 66,6 | 100 | 133 | 167 | 200 | 233 | 267 |
| | A | kW | H (m) = Total head | | | | | | | | | |
| I-MPCM 31 | 4,6 | 1,05 | | 15,6 | 15,6 | 15,2 | 14,4 | 13,4 | 11,9 | 10,2 | 8,1 | 5,6 |

**P1:** Maximum power input.
**H:** Total head in m
Tolerances according to UNI EN ISO 9906:2012

# I-MPC

## Characteristic curves

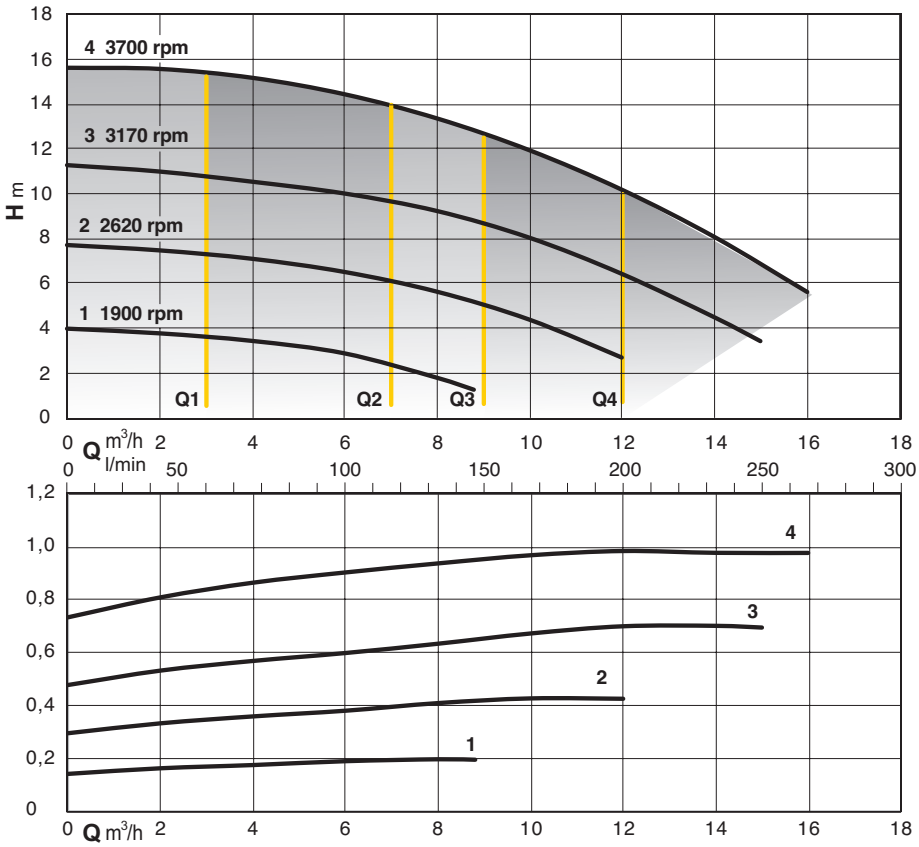


**Constant flow mode**

Q1 - Q2 - Q3 - Q4
In this mode, the system keeps the preset flow rate constant as the pressure required by the system varies.

**Programmable Speed Mode**

1 - 2 - 3 - 4
In this mode, by changing the working frequency, it is possible to choose one of the 4 utilization curves included within the working range.

## Dimensions and weights

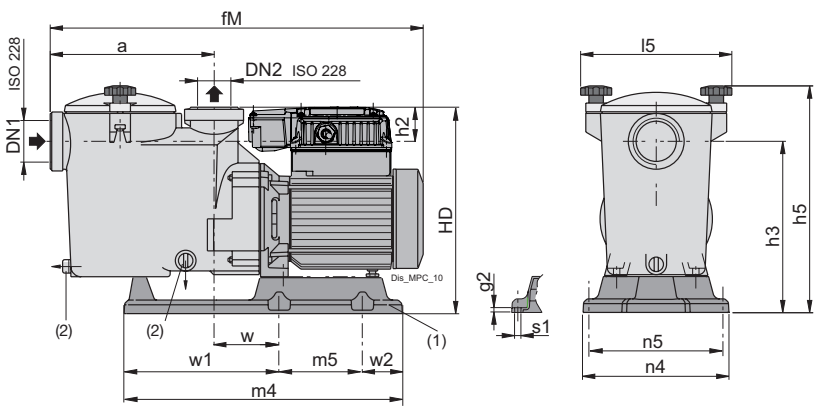


| TYPE | | | mm | | | | | | | | | | | | | | | | kg |
|---|---|---|---|---|---|---|---|---|---|---|---|---|---|---|---|---|---|---|---|
| | DN1 | DN2 | a | fM | g2 | h2 | h3 | h5 | HD | l5 | m4 | m5 | n4 | n5 | s1 | w | w1 | w2 | Weight |
| **I-MPCM 31** | G2 | G1 1/2 | 235 | 546 | 7 | 50 | 243 | 323 | 293 | 215 | 410 | 123 | 215 | 197 | 9 | 100 | 128.5 | 158.5 | 12.7 |

# I-MPC

## Control Panel

The control panel allows to visualize:
- Initial screen (rUn, OFF, StB, Err)
- Motor Operating Frequency
- Supply current input
- Supply electrical power input
- Supply voltage

## Features

Strong transparent Lexan strainer cover
Strong Noryl pump casing
Large capacity strainer basket
Stainless steel AISI 316 wear-ring diffuser-funnel, for extra reliability
Diffuser with peripheral-longitudinal flow, for a quicker self-priming

# MPC

**Coverage chart n ≈ 2800 rpm**

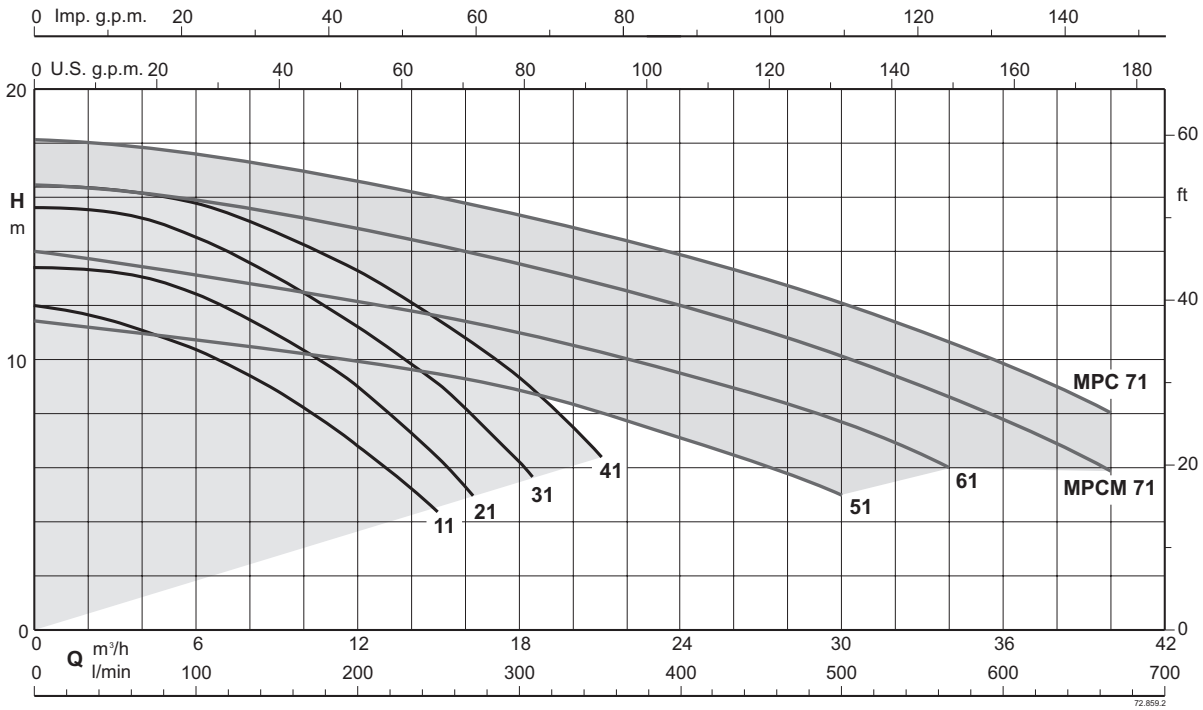


# Self-priming swimming pool pumps with built-in strainer

# MPC

## Construction

Self-priming swimming pool pumps with built-in strainer and a motor insulated from the pumped water.
The pump is made from high quality plastic materials, and is resistant to corrosion and sand erosion.
With stainless steel diffuser.
Includes a base-plate kit.

## Applications

For water circulation in swimming pool filtration systems.
For clean or slightly dirty water with solids in suspension.

## Operating conditions

Water temperature up to 60 °C.
Ambient temperature up to 40° C.
Maximum permissible pressure in the pump casing 2,5 bar.
Continuous duty (S3 60% for single-phase pump to 1,5-1,8 kW).

## Certification mark for MPCM

## Motor

2-pole induction motor, 50 Hz (n ≈ 2800 1/min).
**MPC:** three-phase 230/400 V ± 10%,
**MPCM:** single-phase 230 V ± 10%, with thermal protector. Capacitor inside the terminal box.
Insulation class F.
Protection IP X4.
**IE2 efficiency class for single-phase motors up to 1,1 kW.**
**IE3 efficiency class for three-phase motors (IE2 up to 0,65 kW).**
Constructed in accordance with EN 60034-1; EN 60034-30-1.
EN 60335-1, EN 60335-2-41.

## Special features on request

Other voltages.
Frequency 60 Hz (as per 60 Hz data sheet).

## Designation

Example: MPCM 21/A
MPC = Series
M = Single-phase version (no indication: three-phase)
21 = Pump type
/A = It refers to a revision

## Materials

| Components | Materials |
|---|---|
| Pump casing | Noryl PPO-GF30 |
| Diffuser cover | Noryl PPO-GF30 |
| Impeller | Noryl PPO-GF30 |
| Strainer cover | Lexan |
| Strainer basket | Polypropylene |
| Diffuser funnel and wear-ring | Stainless Steel 1.4401 EN 10088 (AISI 316) |
| Mechanical seal | Carbon - Ceramic - FPM |

# MPC

calpeda®

## Performance n ≈ 2800 rpm

### Three-phase

| Model | 230V | 400V | P2 | | Q = Flow | | | | | | | | |
|---|---|---|---|---|---|---|---|---|---|---|---|---|---|
| | | | | | m³/h | 0 | 3 | 6 | 9 | 12 | 15 | 18 | 21 |
| | | | | | l/min | | 50 | 100 | 150 | 200 | 250 | 300 | 350 |
| | A | | kW | HP | H (m) = Total head | | | | | | | | |
| MPC 11 | 2,8 | 1,6 | 0,37 | 0,5 | | 11,9 | 11,4 | 10,3 | 8,9 | 6,8 | 4,2 | - | - |
| MPC 21/A | 3 | 1,7 | 0,55 | 0,75 | | 13,4 | 13,3 | 12,4 | 10,9 | 9 | 6,3 | - | - |
| MPC 31/B | 3,7 | 2,2 | 0,75 | 1 | | 15,6 | 15,5 | 14,5 | 13 | 11,2 | 9,1 | 6,2 | - |
| MPC 41/A | 4,6 | 2,7 | 1,1 | 1,5 | | 16,4 | 16,2 | 15,8 | 14,7 | 13,3 | 11,4 | 9,3 | 6,4 |

### Single-phase

| Model | 230V | P2 | | P1 | Q = Flow | | | | | | | | |
|---|---|---|---|---|---|---|---|---|---|---|---|---|---|
| | | | | | m³/h | 0 | 3 | 6 | 9 | 12 | 15 | 18 | 21 |
| | | | | | l/min | | 50 | 100 | 150 | 200 | 250 | 300 | 350 |
| | A | kW | HP | kW | H (m) = Total head | | | | | | | | |
| MPCM 11 | 3,3 | 0,37 | 0,5 | 0,57 | | 11,9 | 11,4 | 10,3 | 8,9 | 6,8 | 4,2 | - | - |
| MPCM 21/A | 4,5 | 0,55 | 0,75 | 1 | | 13,4 | 13,3 | 12,4 | 10,9 | 9 | 6,3 | - | - |
| MPCM 31/A | 5,4 | 0,75 | 1 | 1,2 | | 15,6 | 15,5 | 14,5 | 13 | 11,2 | 9,1 | 6,2 | - |
| MPCM 41 | 7 | 1,1 | 1,5 | 1,6 | | 16,4 | 16,2 | 15,8 | 14,7 | 13,3 | 11,4 | 9,3 | 6,4 |

### Three-phase

| Model | 230V | 400V | P2 | | Q = Flow | | | | | | | | | | | |
|---|---|---|---|---|---|---|---|---|---|---|---|---|---|---|---|---|
| | | | | | m³/h | 0 | 3 | 9 | 15 | 18 | 21 | 24 | 27 | 30 | 34 | 40 |
| | | | | | l/min | | 50 | 150 | 250 | 300 | 350 | 400 | 450 | 500 | 567 | 667 |
| | A | | kW | HP | H (m) = Total head | | | | | | | | | | | |
| MPC 51/A | 4,6 | 2,7 | 1,1 | 1,5 | | 11,5 | 11 | 10,5 | 9,5 | 9 | 8 | 7 | 6 | 5 | - | - |
| MPC 61/A | 6,2 | 3,6 | 1,5 | 2 | | 14 | 13,5 | 12,5 | 11,5 | 11 | 10,5 | 9,5 | 8,5 | 7,5 | 6 | - |
| MPC 71/B | 9,2 | 5,3 | 2,2 | 3 | | 18,2 | 18 | 17 | 16 | 15,5 | 14,5 | 14 | 13 | 12 | 10,5 | 8 |

### Single-phase

| Model | 230V | P2 | | P1 | Q = Flow | | | | | | | | | | | |
|---|---|---|---|---|---|---|---|---|---|---|---|---|---|---|---|---|
| | | | | | m³/h | 0 | 3 | 9 | 15 | 18 | 21 | 24 | 27 | 30 | 34 | 40 |
| | | | | | l/min | | 50 | 150 | 250 | 300 | 350 | 400 | 450 | 500 | 567 | 667 |
| | A | kW | HP | kW | H (m) = Total head | | | | | | | | | | | |
| MPCM 51 | 7 | 1,1 | 1,5 | 1,6 | | 11,5 | 11 | 10,5 | 9,5 | 9 | 8 | 7 | 6 | 5 | - | - |
| MPCM 61 | 9,2 | 1,5 | 2 | 2 | | 14 | 13,5 | 12,5 | 11,5 | 11 | 10,5 | 9,5 | 8,5 | 7,5 | 6 | - |
| MPCM 71/B | 11,2 | 1,8 | 2,5 | 2,5 | | 16,4 | 15,9 | 14,9 | 14 | 13,4 | 12,7 | 12,1 | 11,3 | 10,2 | 8,5 | 5,8 |

**P1:** Maximum power input.
**P2:** Rated motor power output.
**H:** Total head in m
Tolerances according to UNI EN ISO 9906:2012

## Self-Priming Capability with the pump located above the water level

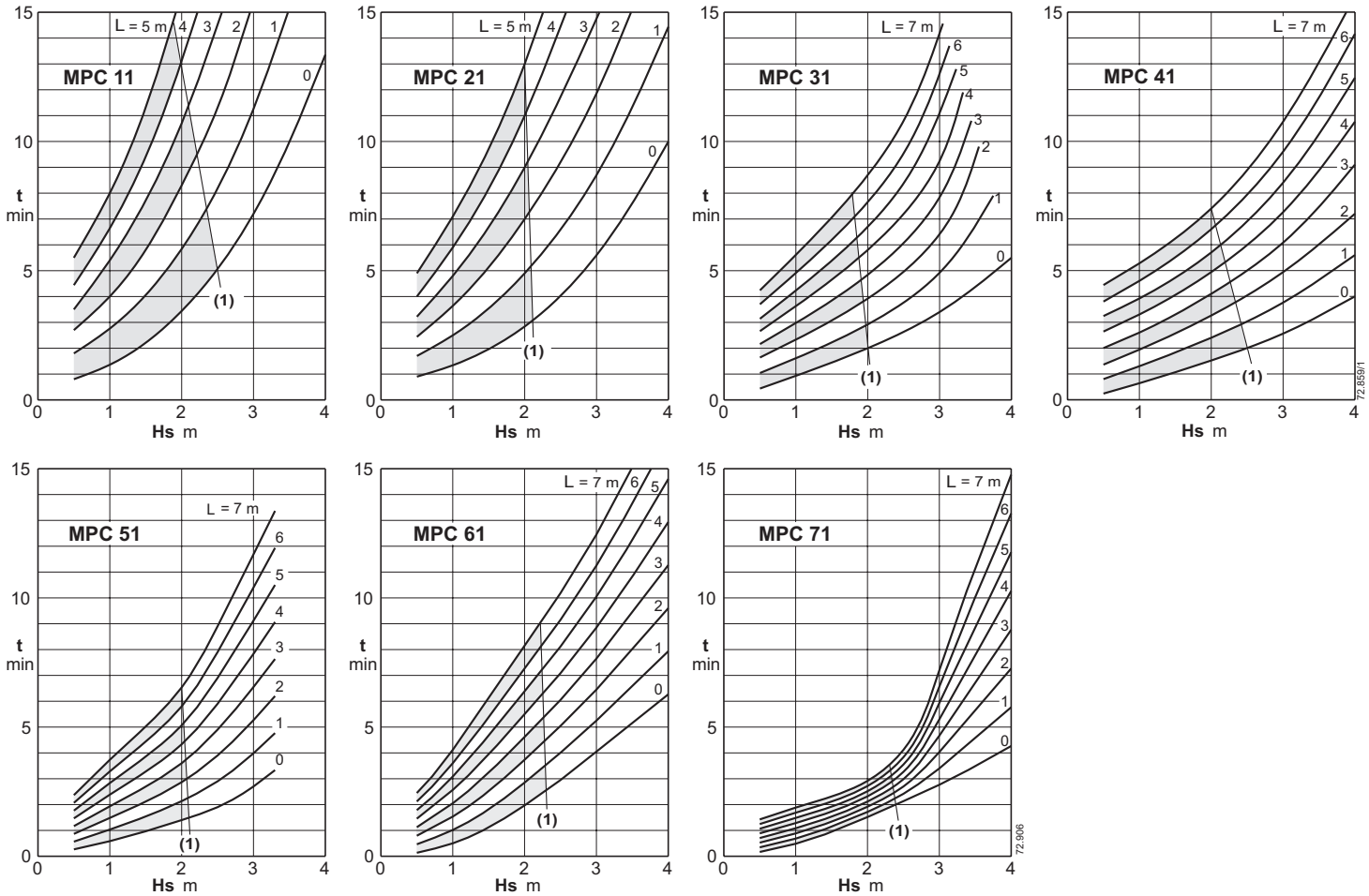


(1) Application limit for automatic self-repriming at each start-up, without check valve.
L (m) Horizontal length of suction pipe above the water level.
Hs (m) Suction lift.
t (min) Self-priming time.

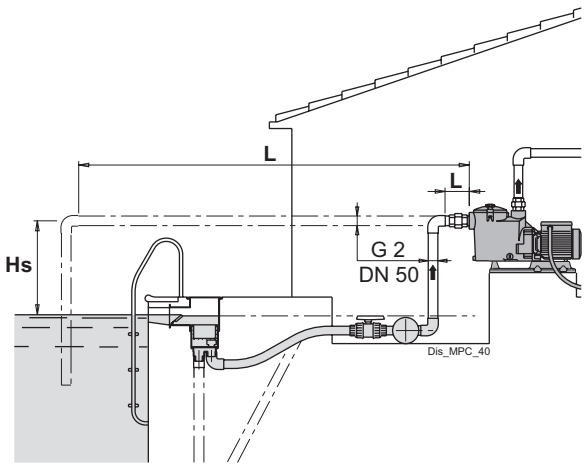

# MPC

## Dimensions and weights

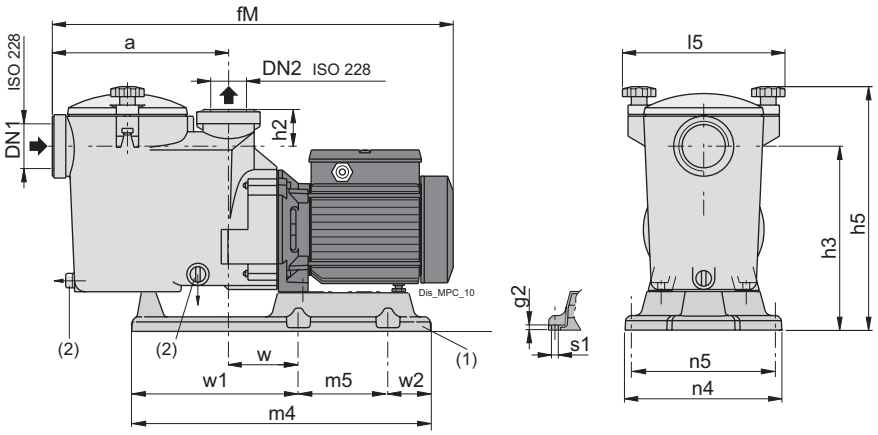


| TYPE | ISO 228 | | mm | | | | | | | | | | | | | | | kg |
|---|---|---|---|---|---|---|---|---|---|---|---|---|---|---|---|---|---|---|
| | DN1 | DN2 | a | fM | g2 | h2 | h3 | h5 | l5 | m4 | m5 | n4 | n5 | s1 | w | w1 | w2 | Weight |
| **MPC 11** | G2 | G1 1/2 | 235 | 504 | 7 | 50 | 243 | 323 | 215 | 410 | 123 | 215 | 197 | 9 | 100 | 228.5 | 58.5 | 9.4 |
| **MPC 21/A** | G2 | G1 1/2 | 235 | 536 | 7 | 50 | 243 | 323 | 215 | 410 | 123 | 215 | 197 | 9 | 100 | 228.5 | 58.5 | 10.8 |
| **MPC 31/B** | G2 | G1 1/2 | 235 | 536 | 7 | 50 | 243 | 323 | 215 | 410 | 123 | 215 | 197 | 9 | 100 | 228.5 | 58.5 | 12.7 |

| TYPE | ISO 228 | | mm | | | | | | | | | | | | | | | kg |
|---|---|---|---|---|---|---|---|---|---|---|---|---|---|---|---|---|---|---|
| | DN1 | DN2 | a | fM | g2 | h2 | h3 | h5 | l5 | m4 | m5 | n4 | n5 | s1 | w | w1 | w2 | Weight |
| **MPCM 11** | G2 | G1 1/2 | 235 | 504 | 7 | 50 | 243 | 323 | 215 | 410 | 123 | 215 | 197 | 9 | 100 | 228.5 | 58.5 | 9.4 |
| **MPCM 21/A** | G2 | G1 1/2 | 235 | 536 | 7 | 50 | 243 | 323 | 215 | 410 | 123 | 215 | 197 | 9 | 100 | 228.5 | 58.5 | 11.7 |
| **MPCM 31/A** | G2 | G1 1/2 | 235 | 536 | 7 | 50 | 243 | 323 | 215 | 410 | 123 | 215 | 197 | 9 | 100 | 228.5 | 58.5 | 12.8 |

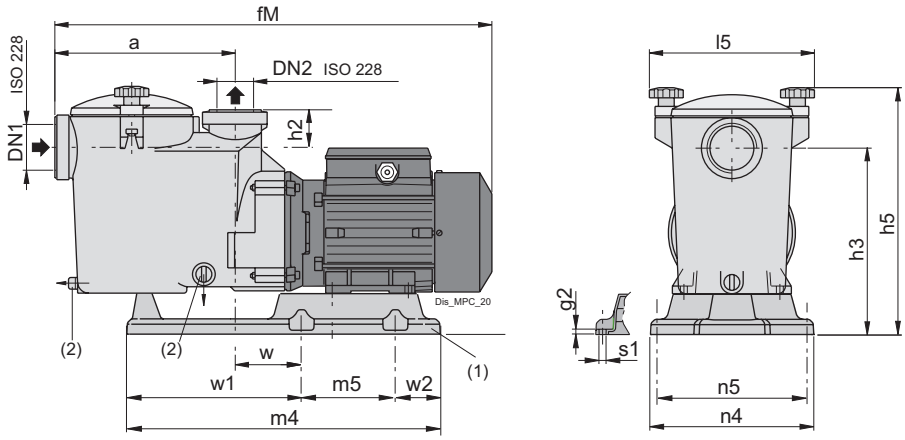


| TYPE | ISO 228 | | mm | | | | | | | | | | | | | | | kg |
|---|---|---|---|---|---|---|---|---|---|---|---|---|---|---|---|---|---|---|
| | DN1 | DN2 | a | fM | g2 | h2 | h3 | h5 | l5 | m4 | m5 | n4 | n5 | s1 | w | w1 | w2 | Weight |
| **MPC 41/A** | G2 | G1 1/2 | 235 | 584 | 7 | 50 | 243 | 323 | 215 | 410 | 123 | 215 | 197 | 9 | 100 | 228.5 | 58.5 | 17 |

| TYPE | ISO 228 | | mm | | | | | | | | | | | | | | | kg |
|---|---|---|---|---|---|---|---|---|---|---|---|---|---|---|---|---|---|---|
| | DN1 | DN2 | a | fM | g2 | h2 | h3 | h5 | l5 | m4 | m5 | n4 | n5 | s1 | w | w1 | w2 | Weight |
| **MPCM 41** | G2 | G1 1/2 | 235 | 584 | 7 | 50 | 243 | 323 | 215 | 410 | 123 | 215 | 197 | 9 | 100 | 228.5 | 58.5 | 17.1 |

**(1):** Pump support base kit
**(2):** Draining

# MPC

## Dimensions and weights

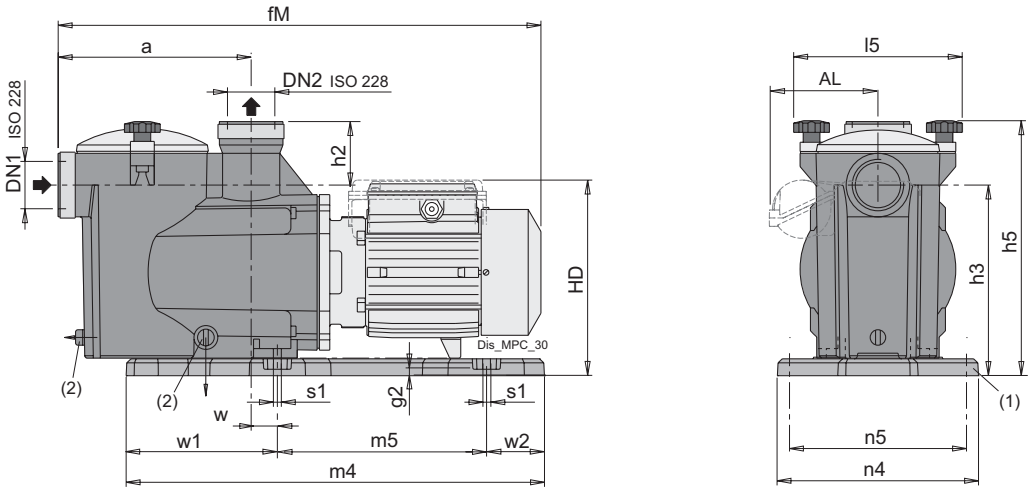


| TYPE | ISO 228 | | mm | | | | | | | | | | | | | | | | kg |
|---|---|---|---|---|---|---|---|---|---|---|---|---|---|---|---|---|---|---|---|
| | DN1 | DN2 | a | fM | g2 | h2 | h3 | h5 | HD | l5 | m4 | m5 | n4 | n5 | s1 | w | w1 | w2 | Weight |
| **MPC 51/A** | G2 | G2 | 235 | 600 | 8 | 80 | 243 | 323 | 260 | 215 | 520 | 260 | 250 | 220 | 14 | 30 | 188 | 72 | 18.6 |
| **MPC 61/A** | G2 | G2 | 235 | 600 | 8 | 80 | 243 | 323 | 260 | 215 | 520 | 260 | 250 | 220 | 14 | 30 | 188 | 72 | 20 |
| **MPC 71/B** | G2 | G2 | 235 | 640 | 8 | 80 | 243 | 323 | 260 | 215 | 520 | 260 | 250 | 220 | 14 | 30 | 188 | 72 | 23.2 |

| TYPE | ISO 228 | | mm | | | | | | | | | | | | | | | | | kg |
|---|---|---|---|---|---|---|---|---|---|---|---|---|---|---|---|---|---|---|---|---|
| | DN1 | DN2 | a | AL | fM | g2 | h2 | h3 | h5 | HD | l5 | m4 | m5 | n4 | n5 | s1 | w | w1 | w2 | Weight |
| **MPCM 51** | G2 | G2 | 235 | - | 600 | 8 | 80 | 243 | 323 | 260 | 215 | 520 | 260 | 250 | 220 | 14 | 30 | 188 | 72 | 18.8 |
| **MPCM 61** | G2 | G2 | 235 | - | 600 | 8 | 80 | 243 | 323 | 260 | 215 | 520 | 260 | 250 | 220 | 14 | 30 | 188 | 72 | 20.7 |
| **MPCM 71/B** | G2 | G2 | 235 | 131 | 640 | 8 | 80 | 243 | 323 | 260 | 215 | 520 | 260 | 250 | 220 | 14 | 30 | 188 | 72 | 23.7 |

**(1):** Pump support base kit
**(2):** Draining

# NMP

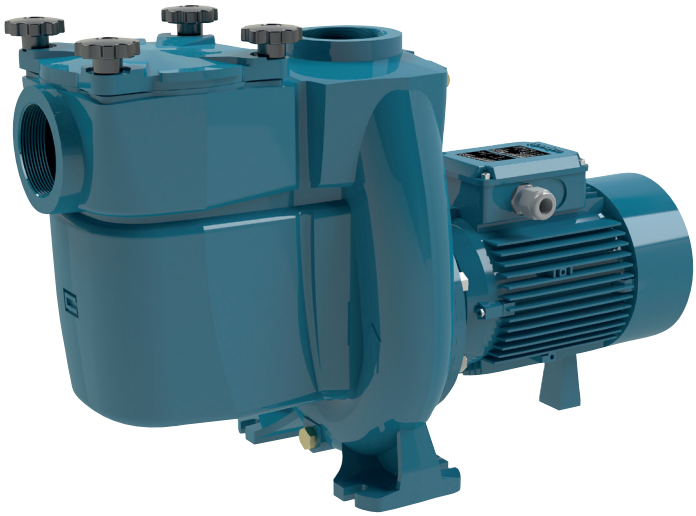

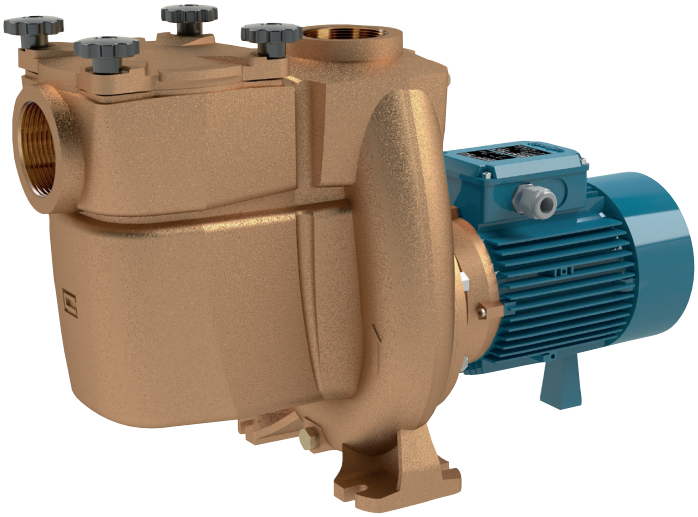

**Coverage chart n ≈ 2900 rpm**

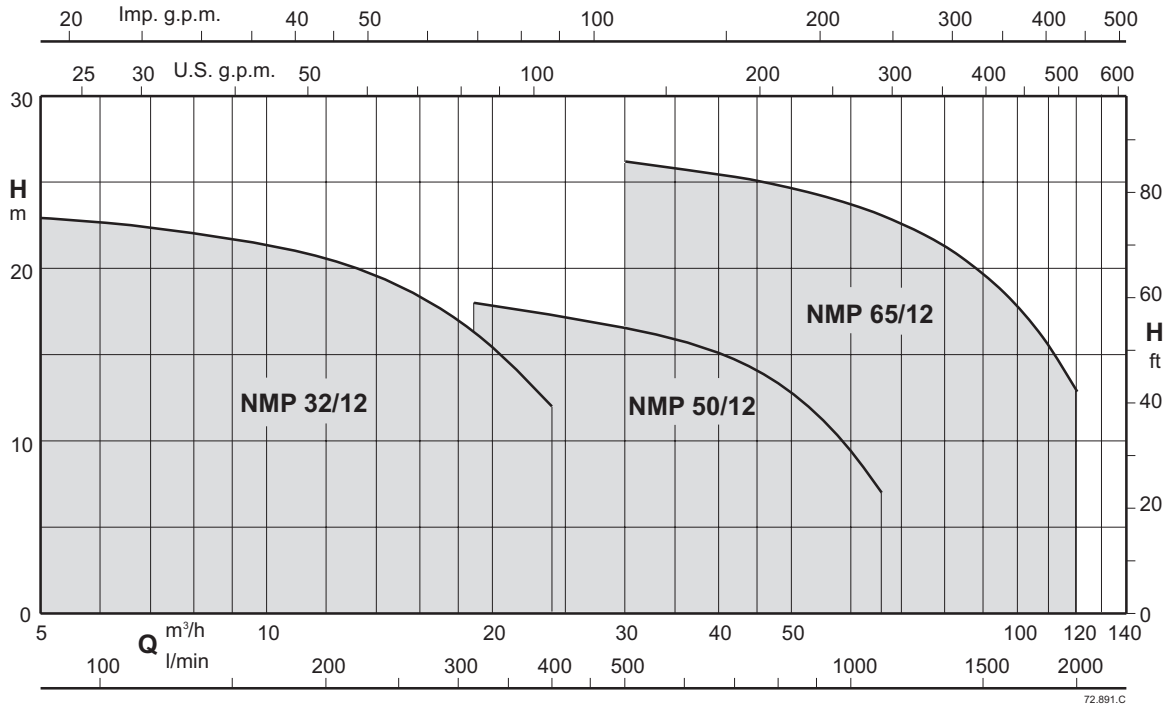


# Self-priming pumps with built-in strainer

# NMP

## Construction

Close-coupled self-priming centrifugal pumps with built-in strainer.
Inner basket with Ø 3 mm holes.
**NMP:** version with pump casing and lantern bracket in cast iron, with cataphoresis coating.
**BNMP:** version with pump casing and lantern bracket in bronze.
The pumps are supplied fully painted.

## Applications

For water circulation in swimming pool filtration systems.
For clean or slightly dirty water with solids in suspension.

## Operating conditions

Water temperature up to 60 °C.
Ambient temperature up to 40° C.
Total suction lift up to 7 m.
Maximum permissible working pressure up to 6 bar.
Continuous duty (S3 60% for single-phase pump to 1,5 kW).

## Motor

2-pole induction motor, 50 Hz (n ≈ 2900 rpm).
NMP: three-phase 230/400 V ± 10%, up to 3 kW
400/690 V ± 10%, from 4 to 7,5 kW;
NMPM: single-phase 230 V ± 10%, with thermal protector.
Insulation class F.
Protection IP X4.
**IE2 efficiency class for single-phase motors up to 1,1 kW.**
**IE3 efficiency class for three-phase motors (IE2 up to 0,65 kW).**
Constructed in accordance with EN 60034-1.
EN 60335-1, EN 60335-2-41.

## Special features on request

Other voltages.
Frequency 60 Hz (as per 60 Hz data sheet).
IP protection: IP55
Special mechanical seal
Higher liquid or ambient temperatures.

## Designation

Example: BNMPM 50/12G/A
NMP = Series
B = Bronze version (no indication: the pump is in the Cast Iron version)
M = Single-phase version (no indication: three-phase)
50 = Delivery port diameter in mm
12 = Nominal impeller diameter
G = Impeller diameter
/A = It refers to a revision

## Materials

| Components | NMP | BNMP |
|---|---|---|
| Pump casing | Cast iron GJL 200 EN 1561 | Bronze CC480K EN 1982 |
| Lantern bracket | Cast iron GJL 200 EN 1561 | Bronze CC480K EN 1982 |
| Impeller | Cast iron GJL 200 EN 1561 | Bronze CC480K EN 1982 |
| | Brass with chrome-plated surface P-Cu Zn 40 Pb 2 UNI 5705 for NMP 32/12 | Brass with chrome-plated surface P-Cu Zn 40 Pb 2 UNI 5705 for BNMP 32/12 |
| Shaft | Chrome-nickel steel 1.4305 EN 10088 (AISI 303) | Stainless Steel 1.4401 EN 10088 (AISI 316) |
| Strainer cover | Cast iron GJL 200 EN 1561 | Bronze CC480K EN 1982 |
| Filter | Chrome-nickel steel 1.4301 EN 10088 (AISI 304) | Chrome-nickel steel 1.4301 EN 10088 (AISI 304) |
| Mechanical seal | Carbon - Ceramic - FPM | Carbon - Ceramic - FPM |

# NMP

calpeda®

## Coverage chart n ≈ 2900 rpm

### Three-phase

| | | | | | | Q = Flow | | | | | | | | | | | | | | | | | | | | |
|---|---|---|---|---|---|---|---|---|---|---|---|---|---|---|---|---|---|---|---|---|---|---|---|---|---|---|
| | | | | | | m³/h | 0 | 6,6 | 9,6 | 10,8 | 12 | 13,2 | 15 | 18,9 | 21 | 24 | 30 | 42 | 48 | 54 | 60 | 66 | 75 | 84 | 96 | 108 | 120 |
| Model | | 230V | 400V | P2 | | l/min | | 110 | 160 | 180 | 200 | 220 | 250 | 315 | 350 | 400 | 500 | 700 | 800 | 900 | 1000 | 1100 | 1250 | 1400 | 1600 | 1800 | 2000 |
| | | A | | kW | HP | | H (m) = Total head | | | | | | | | | | | | | | | | | | | |
| BNMP | NMP 32/12FE | 4 | 2,3 | 0,55 | 0,75 | | 13 | 13 | 12 | 11 | 10,5 | 10 | 9 | - | - | - | - | - | - | - | - | - | - | - | - | - | - |
| BNMP | NMP 32/12DE | 4 | 2,3 | 0,75 | 1 | | 18 | 18 | 17 | 16 | 15,5 | 15 | 14 | - | - | - | - | - | - | - | - | - | - | - | - | - | - |
| BNMP | NMP 32/12A/A | 4,6 | 2,7 | 1,1 | 1,5 | | 22,4 | 22 | 21 | 20,5 | 20 | 19,5 | 18,5 | - | - | - | - | - | - | - | - | - | - | - | - | - | - |
| BNMP | NMP 32/12S/A | 7,5 | 4,3 | 1,5 | 2 | | 23 | 22,5 | 21,5 | 21 | 20,5 | 20 | 19 | 16 | 15 | 12 | - | - | - | - | - | - | - | - | - | - | - |
| BNMP | NMP 50/12H/A | 4,6 | 2,7 | 1,1 | 1,5 | | 10,2 | - | - | - | - | - | - | 9 | 9 | 8,5 | 7,5 | 5,5 | 4,5 | 3 | - | - | - | - | - | - | - |
| BNMP | NMP 50/12G/A | 7,5 | 4,3 | 1,5 | 2 | | 12,9 | - | - | - | - | - | - | 12 | 12 | 11,5 | 10,5 | 8 | 7 | 5 | 3,5 | - | - | - | - | - | - |
| BNMP | NMP 50/12F/B | 9,2 | 5,3 | 2,2 | 3 | | 16,8 | - | - | - | - | - | - | 16 | 16 | 15,5 | 14,5 | 12 | 10,5 | 8,5 | 6,5 | 5 | - | - | - | - | - |
| BNMP | NMP 50/12D/A | 11,5 | 6,6 | 3 | 4 | | 19 | - | - | - | - | - | - | 18 | 18 | 17,5 | 16,5 | 15 | 13 | 11,5 | 9,5 | 7 | - | - | - | - | - |
| BNMP | NMP 65/12E | - | 9,6 | 4 | 5,5 | | 19,6 | - | - | - | - | - | - | - | - | - | 17,7 | 16,5 | 15,9 | 15,2 | 14,4 | 13,6 | 12,2 | 10,7 | 8,5 | 6,1 | - |
| BNMP | NMP 65/12C | - | 10,8 | 5,5 | 7,5 | | 23,1 | - | - | - | - | - | - | - | - | - | 21,4 | 20,5 | 19,5 | 19,3 | 18,6 | 17,8 | 16,6 | 15,2 | 13,1 | 10,6 | 7,3 |
| BNMP | NMP 65/12A | - | 14,3 | 7,5 | 10 | | 28,4 | - | - | - | - | - | - | - | - | - | 26,2 | 25,3 | 24,8 | 24,3 | 23,7 | 23,1 | 22 | 20,7 | 18,6 | 16 | 12,9 |

### Single-phase

| | | | | | | Q = Flow | | | | | | | | | | | | | | |
|---|---|---|---|---|---|---|---|---|---|---|---|---|---|---|---|---|---|---|---|---|
| | | | | | | m³/h | 0 | 6,6 | 9,6 | 10,8 | 12 | 13,2 | 15 | 18,9 | 21 | 24 | 30 | 42 | 48 | 54 | 60 |
| Model | | 230V | P2 | | P1 | l/min | | 110 | 160 | 180 | 200 | 220 | 250 | 315 | 350 | 400 | 500 | 700 | 800 | 900 | 1000 |
| | | A | kW | HP | kW | | H (m) = Total head | | | | | | | | | | | | | | |
| BNMPM | NMPM 32/12FE | 4,5 | 0,55 | 0,75 | 0,78 | | 13 | 12 | 11 | 10 | 9,5 | 9 | 8 | - | - | - | - | - | - | - | - |
| BNMPM | NMPM 32/12DE | 5,8 | 0,75 | 1 | 1,01 | | 17,4 | 17 | 16 | 15 | 14,5 | 14 | 13 | - | - | - | - | - | - | - | - |
| BNMPM | NMPM 32/12AE | 7,4 | 1,1 | 1,5 | 1,44 | | 22,1 | 21,5 | 20,5 | 19,5 | 19 | 18,5 | 17,5 | - | - | - | - | - | - | - | - |
| BNMPM | NMPM 32/12SE | 9,2 | 1,5 | 2 | 2 | | 23 | 22,5 | 21,5 | 21 | 20,5 | 20 | 19 | 16 | 15 | 12 | - | - | - | - | - |
| BNMPM | NMPM 50/12HE | 7,4 | 1,1 | 1,5 | 1,44 | | 10,2 | - | - | - | - | - | - | 9 | 9 | 8,5 | 7,5 | 5,5 | 4,5 | 3 | - |
| BNMPM | NMPM 50/12GE | 9,2 | 1,5 | 2 | 2 | | 12,9 | - | - | - | - | - | - | 12 | 12 | 11,5 | 10,5 | 8 | 7 | 5 | 3,5 |

**P1:** Maximum power input.
**P2:** Rated motor power output.
**H:** Total head in m
Tolerances according to UNI EN ISO 9906:2012

# NMP

calpeda®

## Dimensions and weights

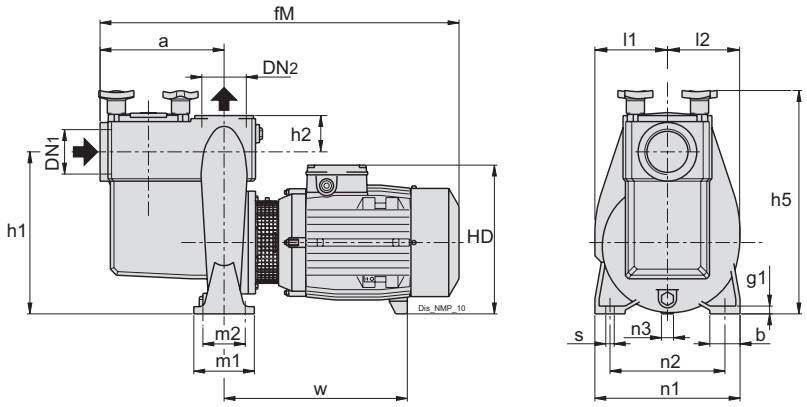


| TYPE | ISO 228 | | mm | | | | | | | | | | | | | | | | | kg |
|---|---|---|---|---|---|---|---|---|---|---|---|---|---|---|---|---|---|---|---|---|
| | DN1 | DN2 | a | b | fM | g1 | h1 | h2 | h5 | HD | l1 | l2 | m1 | m2 | n1 | n2 | n3 | s | w | Weight |
| NMP 32/12FE | G2 | G2 | 195 | 50 | 510 | 12 | 230 | 50 | 330 | 228 | 106 | 99 | 100 | 70 | 190 | 140 | 30 | 14 | 220 | 28.3 |
| NMP 32/12DE | G2 | G2 | 195 | 50 | 510 | 12 | 230 | 50 | 330 | 228 | 106 | 99 | 100 | 70 | 190 | 140 | 30 | 14 | 220 | 28.5 |
| NMP 32/12A/A | G2 | G2 | 195 | 50 | 510 | 12 | 230 | 50 | 330 | 228 | 106 | 99 | 100 | 70 | 190 | 140 | 30 | 14 | 220 | 32 |
| NMP 32/12S/A | G2 | G2 | 195 | 50 | 510 | 12 | 230 | 50 | 330 | 228 | 106 | 99 | 100 | 70 | 190 | 140 | 30 | 14 | 220 | 32 |
| NMP 50/12H/A | G2 1/2 | G2 1/2 | 205 | 50 | 540 | 12 | 262 | 60 | 370 | 240 | 120 | 117 | 100 | 70 | 240 | 190 | 37 | 14 | 234 | 35.8 |
| NMP 50/12G/A | G2 1/2 | G2 1/2 | 205 | 50 | 540 | 12 | 262 | 60 | 370 | 240 | 120 | 117 | 100 | 70 | 240 | 190 | 37 | 14 | 234 | 37.3 |
| NMP 50/12F/B | G2 1/2 | G2 1/2 | 205 | 50 | 580 | 12 | 262 | 60 | 370 | 240 | 120 | 117 | 100 | 70 | 240 | 190 | 37 | 14 | 274 | 40.8 |
| NMP 50/12D/A | G2 1/2 | G2 1/2 | 205 | 50 | 602 | 12 | 262 | 60 | 370 | 250 | 120 | 117 | 100 | 70 | 240 | 190 | 20 | 14 | 298 | 47.7 |
| NMP 65/12E | G 3 | G 3 | 320 | 65 | 724 | 15 | 360 | 80 | 480 | 298 | 157 | 159 | 125 | 95 | 280 | 212 | 60 | 14 | 303 | 73.9 |
| NMP 65/12C | G 3 | G 3 | 320 | 65 | 785 | 15 | 360 | 80 | 466 | 326 | 157 | 158 | 125 | 95 | 280 | 212 | 34 | 14 | 336 | 87.8 |
| NMP 65/12A | G 3 | G 3 | 320 | 65 | 785 | 15 | 360 | 80 | 466 | 326 | 157 | 158 | 125 | 95 | 280 | 212 | 34 | 14 | 336 | 92.2 |

| TYPE | ISO 228 | | mm | | | | | | | | | | | | | | | | | kg |
|---|---|---|---|---|---|---|---|---|---|---|---|---|---|---|---|---|---|---|---|---|
| | DN1 | DN2 | a | b | fM | g1 | h1 | h2 | h5 | HD | l1 | l2 | m1 | m2 | n1 | n2 | n3 | s | w | Weight |
| NMPM 32/12FE | G2 | G2 | 195 | 50 | 510 | 12 | 230 | 50 | 330 | 228 | 106 | 99 | 100 | 70 | 190 | 140 | 30 | 14 | 220 | 29.7 |
| NMPM 32/12DE | G2 | G2 | 195 | 50 | 510 | 12 | 230 | 50 | 330 | 228 | 106 | 99 | 100 | 70 | 190 | 140 | 30 | 14 | 220 | 32 |
| NMPM 32/12AE | G2 | G2 | 195 | 50 | 510 | 12 | 230 | 50 | 330 | 228 | 106 | 99 | 100 | 70 | 190 | 140 | 30 | 14 | 220 | - |
| NMPM 32/12SE | G2 | G2 | 195 | 50 | 510 | 12 | 230 | 50 | 330 | 228 | 106 | 99 | 100 | 70 | 190 | 140 | 30 | 14 | 220 | 33.8 |
| NMPM 50/12HE | G2 1/2 | G2 1/2 | 205 | 50 | 540 | 12 | 262 | 60 | 370 | 240 | 120 | 117 | 100 | 70 | 240 | 190 | 37 | 14 | 234 | - |
| NMPM 50/12GE | G2 1/2 | G2 1/2 | 205 | 50 | 540 | 12 | 262 | 60 | 370 | 240 | 120 | 117 | 100 | 70 | 240 | 190 | 37 | 14 | 234 | 37.7 |

| TYPE | ISO 228 | | mm | | | | | | | | | | | | | | | | | kg |
|---|---|---|---|---|---|---|---|---|---|---|---|---|---|---|---|---|---|---|---|---|
| | DN1 | DN2 | a | b | fM | g1 | h1 | h2 | h5 | HD | l1 | l2 | m1 | m2 | n1 | n2 | n3 | s | w | Weight |
| BNMP 32/12FE | G2 | G2 | 195 | 50 | 510 | 12 | 230 | 50 | 330 | 228 | 106 | 99 | 100 | 70 | 190 | 140 | 30 | 14 | 220 | 32.6 |
| BNMP 32/12DE | G2 | G2 | 195 | 50 | 510 | 12 | 230 | 50 | 330 | 228 | 106 | 99 | 100 | 70 | 190 | 140 | 30 | 14 | 220 | 32.9 |
| BNMP 32/12A/A | G2 | G2 | 195 | 50 | 510 | 12 | 230 | 50 | 330 | 228 | 106 | 99 | 100 | 70 | 190 | 140 | 30 | 14 | 220 | 35.1 |
| BNMP 32/12S/A | G2 | G2 | 195 | 50 | 510 | 12 | 230 | 50 | 330 | 228 | 106 | 99 | 100 | 70 | 190 | 140 | 30 | 14 | 220 | 36.7 |
| BNMP 50/12H/A | G2 1/2 | G2 1/2 | 205 | 50 | 540 | 12 | 262 | 60 | 370 | 240 | 120 | 117 | 100 | 70 | 240 | 190 | 37 | 14 | 234 | 40.6 |
| BNMP 50/12G/A | G2 1/2 | G2 1/2 | 205 | 50 | 540 | 12 | 262 | 60 | 370 | 240 | 120 | 117 | 100 | 70 | 240 | 190 | 37 | 14 | 234 | 41.7 |
| BNMP 50/12F/B | G2 1/2 | G2 1/2 | 205 | 50 | 580 | 12 | 262 | 60 | 370 | 240 | 120 | 117 | 100 | 70 | 240 | 190 | 37 | 14 | 274 | 46.2 |
| BNMP 50/12D/A | G2 1/2 | G2 1/2 | 205 | 50 | 602 | 12 | 262 | 60 | 370 | 250 | 120 | 117 | 100 | 70 | 240 | 190 | 20 | 14 | 298 | 51.5 |
| BNMP 65/12E | G 3 | G 3 | 320 | 65 | 724 | 15 | 360 | 80 | 480 | 298 | 157 | 159 | 125 | 95 | 280 | 212 | 60 | 14 | 303 | 86.6 |
| BNMP 65/12C | G 3 | G 3 | 320 | 65 | 785 | 15 | 360 | 80 | 466 | 326 | 157 | 158 | 125 | 95 | 280 | 212 | 34 | 14 | 336 | 98.3 |
| BNMP 65/12A | G 3 | G 3 | 320 | 65 | 785 | 15 | 360 | 80 | 466 | 326 | 157 | 158 | 125 | 95 | 280 | 212 | 34 | 14 | 336 | 103.5 |

| TYPE | ISO 228 | | mm | | | | | | | | | | | | | | | | | kg |
|---|---|---|---|---|---|---|---|---|---|---|---|---|---|---|---|---|---|---|---|---|
| | DN1 | DN2 | a | b | fM | g1 | h1 | h2 | h5 | HD | l1 | l2 | m1 | m2 | n1 | n2 | n3 | s | w | Weight |
| BNMPM 32/12FE | G2 | G2 | 195 | 50 | 510 | 12 | 230 | 50 | 330 | 228 | 106 | 99 | 100 | 70 | 190 | 140 | 30 | 14 | 220 | 33.7 |
| BNMPM 32/12DE | G2 | G2 | 195 | 50 | 510 | 12 | 230 | 50 | 330 | 228 | 106 | 99 | 100 | 70 | 190 | 140 | 30 | 14 | 220 | - |
| BNMPM 32/12AE | G2 | G2 | 195 | 50 | 510 | 12 | 230 | 50 | 330 | 228 | 106 | 99 | 100 | 70 | 190 | 140 | 30 | 14 | 220 | - |
| BNMPM 32/12SE | G2 | G2 | 195 | 50 | 510 | 12 | 230 | 50 | 330 | 228 | 106 | 99 | 100 | 70 | 190 | 140 | 30 | 14 | 220 | 37 |
| BNMPM 50/12HE | G2 1/2 | G2 1/2 | 205 | 50 | 540 | 12 | 262 | 60 | 370 | 240 | 120 | 117 | 100 | 70 | 240 | 190 | 37 | 14 | 234 | - |
| BNMPM 50/12GE | G2 1/2 | G2 1/2 | 205 | 50 | 540 | 12 | 262 | 60 | 370 | 240 | 120 | 117 | 100 | 70 | 240 | 190 | 37 | 14 | 234 | 41.9 |

# NMP

## Characteristic curves n ≈ 2900 rpm

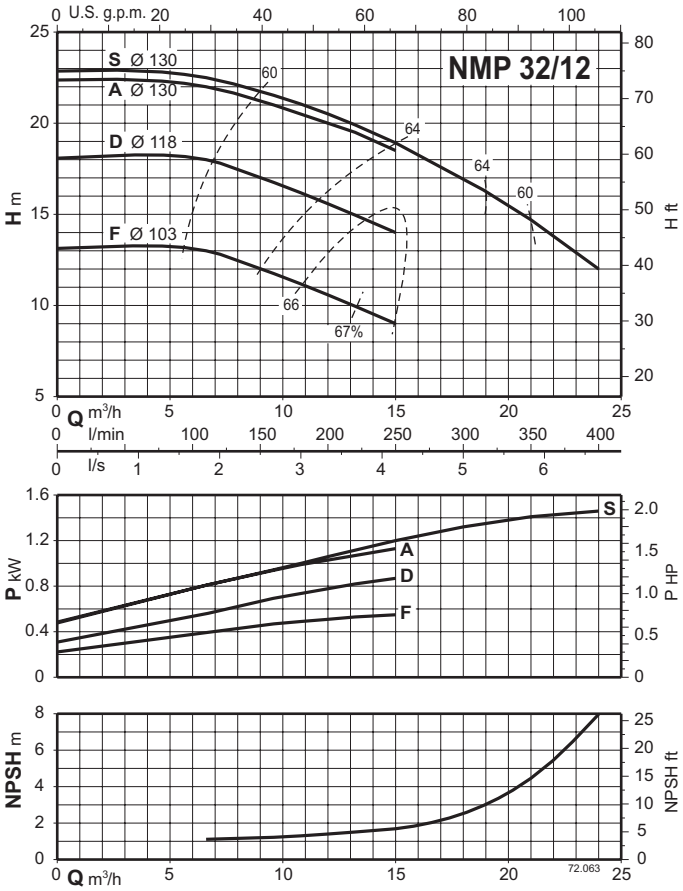


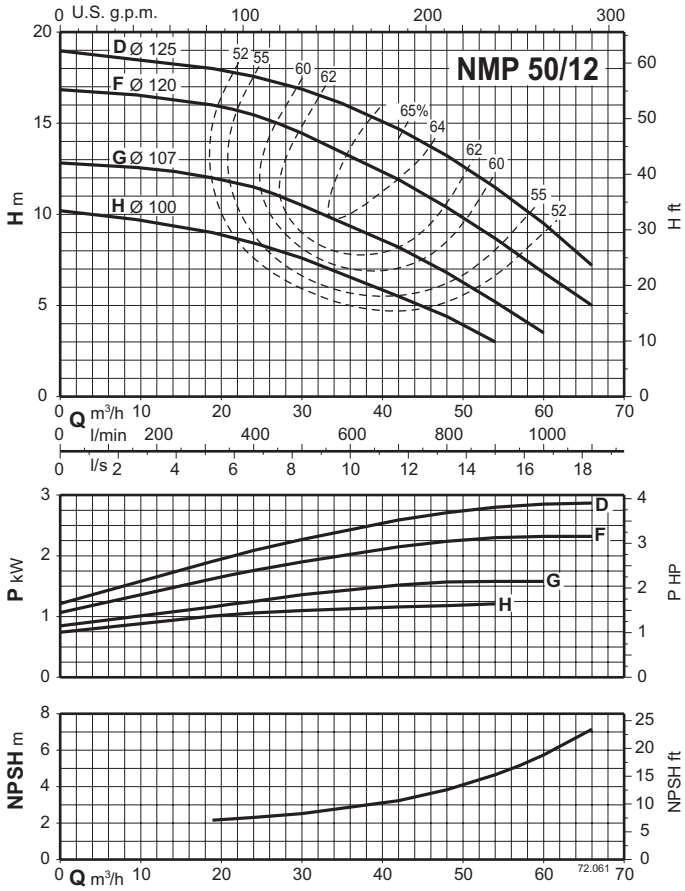


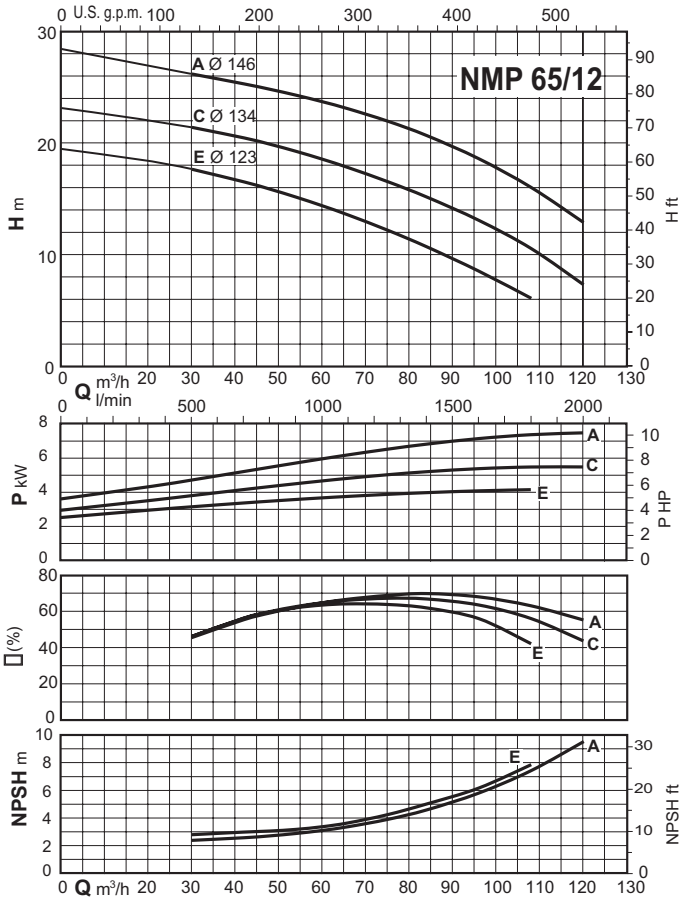

# Pre-filters in stainless steel

# Pre-filters in polypropylene

**Recommended pumps and pre-filters**

| Pre-filters | DN | flow * | Pumps |
|---|---|---|---|
| | mm | m3/h | |
| PFP 50 | 50 | 12 | NM4 32/16, NM4 32/20 |
| PFP 65 | 65 | 20 | NM4 40/16, NM4 40/20, NM4 40/25 |
| PFP 80 | 80 | 30 | NM4 50/16, NM4 50/20, NM4 50/25 |
| PFP 100 - PF 100 | 100 | 48 | NM4 65/16, NM4 65/20, NM4 65/25, NM4 65/31 |
| PFP 125 - PF 125 | 125 | 75 | NM4 80/16, NM4 80/20, NM4 80/25, NM4 80/31 |
| PFP 150 - PP 150 | 150 | 108 | NM4 100/20, NM4 100/25, NM4 100/31 |
| PFP 200 | 200 | 192 | NM4 125/25 |

*** Flow rate with 1,7 m/s flow velocity**

# Pre-filters

# PF

## Construction

**PF type**
Pre-filters with removable basket, constructed in stainless steel.
Ports with free annular flanges.
Clamp type closing with lever and double adjustment clamp.
Inner basket with Ø 6 mm holes.

**PFP type**
Pre-filters with removable basket, constructed in polypropylene.
Ports with free annular flanges.
Transparent closing lid.
Easy-to-remove lid with 6 knobs.
Inner basket with Ø 5 mm holes.

## Operating conditions

Max working pressure: 0,5 bar.
Liquid temperature up to: PFP 40°C (PF 50°C).
pH value: 6.5-8.

## Applications

For water circulation pump in filtration plants in swimming pools.
To prevent foreign bodies from entering the pump and the plant.

## Materials

| Components | | Materials |
|---|---|---|
| Pre-filter body<br>Pre-filter cover | PF 100-304 | Stainless steel AISI 304 |
| | PF 125-304 | |
| | PF 150-304 | |
| | PF 100-316 | Stainless steel AISI 316 |
| | PF 125-316 | |
| | PF 150-316 | |
| Pre-filter body | PFP all | Polypropylene |
| Pre-filter cover | PFP all | Transparent polypropylene |
| Strainer basket | all | Stainless steel AISI 316 |

## Dimensions and weights

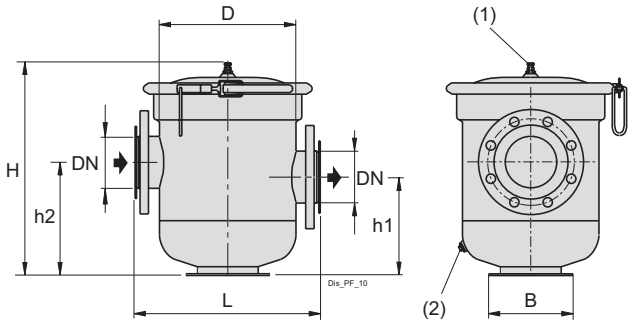


1 Relief valve
2 Draining plug

Flanges UNI 1092-1 PN 10

| Pump type | mm | | | | | | | |
|---|---|---|---|---|---|---|---|---|
| | DN | H | h1 | h2 | L | D | B | kg |
| PF 100 | 100 | 530 | 247 | 287 | 440 | 292 | 185 | 17,5 |
| PF 125 | 125 | | | | 440 | 292 | 185 | 17,7 |
| PF 150 | 150 | 550 | 260 | 300 | 500 | 350 | 210 | 23,3 |

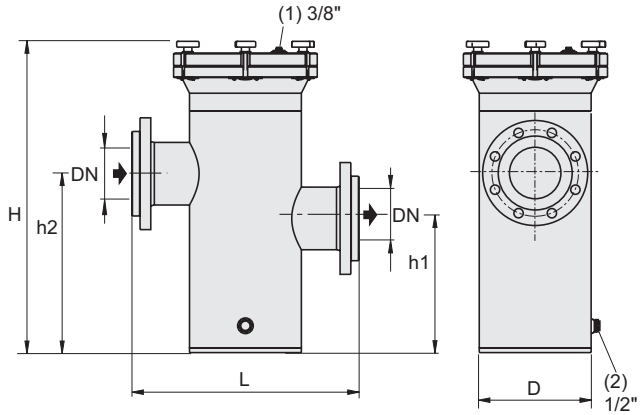


1 Relief valve
2 Draining plug

Flanges UNI 1092-1 PN 10

| Pump type | mm | | | | | | |
|---|---|---|---|---|---|---|---|
| | DN | H | h1 | h2 | L | D | kg |
| PFP 50 | 50 | 695 | 300 | 400 | 440 | 250 | 14 |
| PFP 65 | 65 | 695 | 300 | 400 | 460 | 250 | 14,1 |
| PFP 80 | 80 | 695 | 300 | 400 | 477 | 250 | 14,2 |
| PFP 100 | 100 | 695 | 300 | 400 | 502 | 250 | 14,3 |
| PFP 125 | 125 | 695 | 300 | 400 | 507 | 250 | 14,5 |
| PFP 150 | 150 | 754 | 300 | 400 | 585 | 315 | 25 |
| PFP 200 | 200 | 795 | 300 | 400 | 689 | 400 | 43 |

## Examples of installations

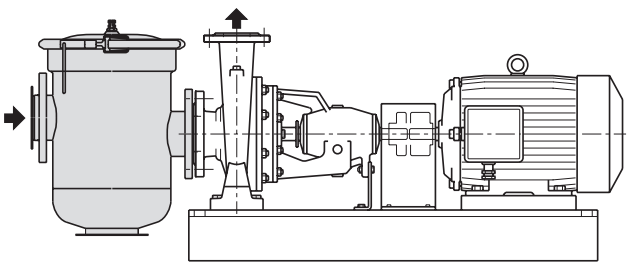

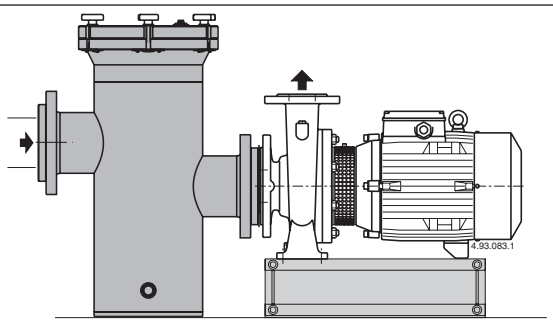

A

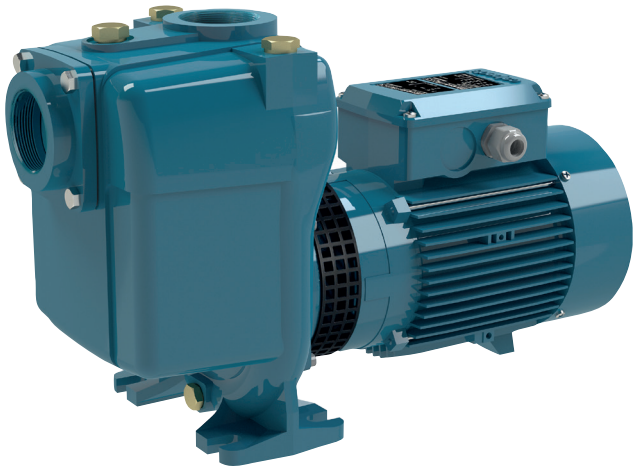

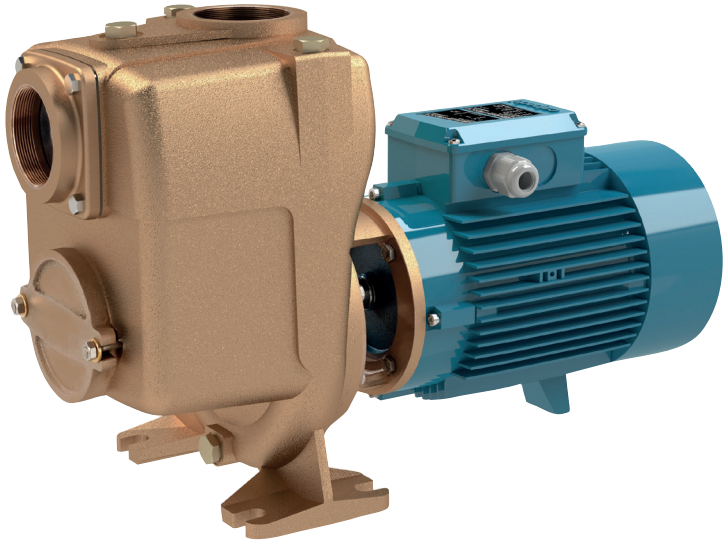

**Coverage chart n ≈ 2900 rpm**

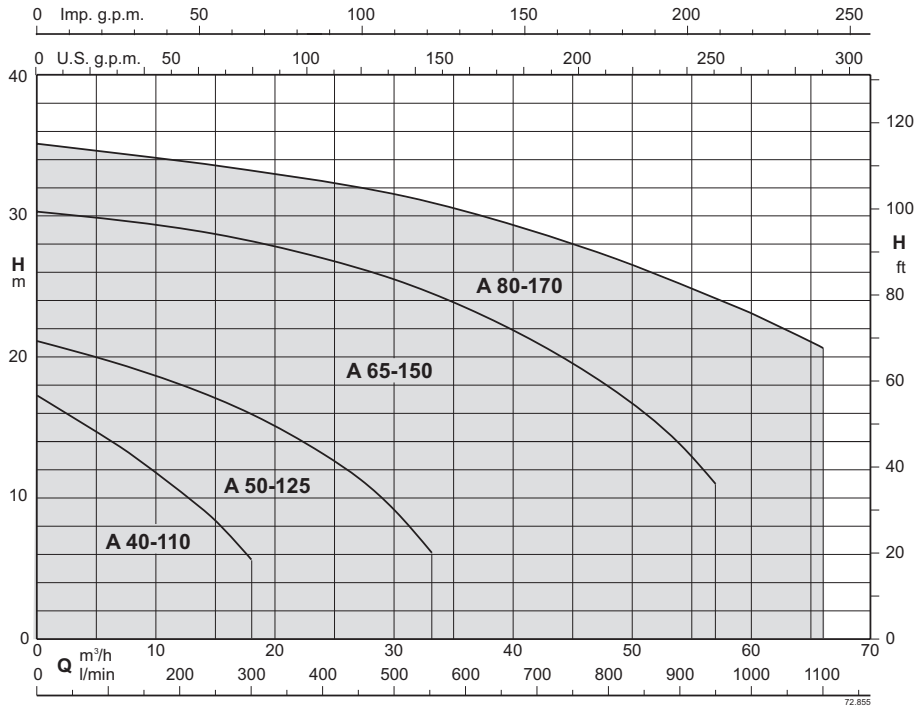


# Self-priming pumps with open impeller

A

## Construction

Close-coupled centrifugal pumps with open impeller.
The built-in backflow preventer
avoids reverse siphoning when the pump is stopped and assures automatic re-priming at the next start.
The pump re-primes itself even if partially filled with liquid and with completely empty suction pipe.
**A:** version with pump casing and lantern bracket in cast iron.
**B-A:** version with pump casing and lantern bracket in bronze.
The pumps are supplied fully painted.

## Applications

For clean or slightly dirty water, also with solids up to 10 mm grain size for A 40, A 50 and 15 mm for A 65, A 80.
For draining a basin or a sump.
For irrigation.
For civil and industrial applications.

## Operating conditions

Liquid temperature from -10 °C to +90 °C.
Ambient temperature up to 40° C.
Maximum permissible working pressure up to 6 bar (10 bar for A 80-170).
Continuous duty (S3 60% for single-phase pump to 1,5 kW).

## Motor

2-pole induction motor, 50 Hz (n ≈ 2900 rpm).
**A:** three-phase 230/400 V ± 10%, up to 3 kW.
400/690 V ± 10%, from 4 to 7,5 kW;
**AM:** single-phase 230 V ± 10%, with thermal protector.
Capacitor inside the terminal box.
Insulation class F.
Protection IP54
**IE2 efficiency class for single-phase motors up to 1,1 kW.**
**Classification scheme IE3 for three-phase motors from 0,75 kW.**
Constructed in accordance with EN 60034-1; EN 60034-30-1.
EN 60335-1, EN 60335-2-41.

## Special features on request

Other voltages.
Frequency 60 Hz (as per 60 Hz data sheet).
IP protection: IP55
Special mechanical seal
Higher or lower liquid or ambient temperatures.
Construction with bearing bracket.

## Designation

Example: BAM 40-/110B/A
B = Bronze version (no indication: the pump is in the Cast Iron version)
A = Series
M = Single-phase version (no indication: three-phase)
40 = Delivery port diameter in mm
110 = Nominal impeller diameter
B = Impeller diameter
/A = It refers to a revision

## Materials

| Components | A | BA |
|---|---|---|
| Pump casing | Cast iron GJL 200 EN 1561 | Bronze CC480K EN 1982 |
| cylindrical suction | Cast iron GJL 200 EN 1561 | Bronze CC480K EN 1982 |
| Inspection cover (A65, A80) | Cast iron GJL 200 EN 1561 | Bronze CC480K EN 1982 |
| Lantern bracket | Cast iron GJL 200 EN 1561 | Bronze CC480K EN 1982 |
| Impeller | Cast iron GJL 200 EN 1561 | Bronze CC480K EN 1982 |
| Shaft | Chrome-nickel steel 1.4305 EN 10088 (AISI 303) | Stainless Steel 1.4401 EN 10088 (AISI 316) |
| | Steel 1.4104 EN 10088 (AISI 430F) for A 40-110, A 65-150A,B | Stainless Steel 1.4401 EN 10088 (AISI 316) |
| Mechanical seal | Carbon - Ceramic - FPM | Carbon - Ceramic - FPM |

A

calpeda®

## Coverage chart n ≈ 2900 rpm

### Three-phase

| | | | | | | Q = Flow | | | | | | | | | | | |
|---|---|---|---|---|---|---|---|---|---|---|---|---|---|---|---|---|---|
| | | | | | | m³/h | 0 | 3,6 | 4,8 | 6 | 7,5 | 8,4 | 9,6 | 10,8 | 12 | 15 | 18 |
| Model | | 230V | 400V | P2 | | l/min | | 60 | 80 | 100 | 125 | 140 | 160 | 180 | 200 | 250 | 300 |
| | | A | | kW | HP | H (m) = Total head | | | | | | | | | | | |
| BA | A 40-110B/A | 2,8 | 1,6 | 0,55 | 0,75 | | 14,4 | 12,9 | 12,4 | 11,8 | 11 | 10,4 | 9,8 | 9 | 8,3 | 6 | 3,4 |
| BA | A 40-110A/B | 3,7 | 2,2 | 0,75 | 1 | | 17,2 | 15,4 | 14,9 | 14,2 | 13,3 | 12,9 | 12,1 | 11,3 | 10,5 | 8,4 | 5,6 |

### Single-phase

| | | | | | | Q = Flow | | | | | | | | | | | |
|---|---|---|---|---|---|---|---|---|---|---|---|---|---|---|---|---|---|
| | | | | | | m³/h | 0 | 3,6 | 4,8 | 6 | 7,5 | 8,4 | 9,6 | 10,8 | 12 | 15 | 18 |
| Model | | 230V | P2 | | P1 | l/min | | 60 | 80 | 100 | 125 | 140 | 160 | 180 | 200 | 250 | 300 |
| | | A | kW | HP | kW | H (m) = Total head | | | | | | | | | | | |
| BAM | AM 40-110B/A | 4,5 | 0,55 | 0,75 | 0,78 | | 14,4 | 12,9 | 12,4 | 11,8 | 11 | 10,4 | 9,8 | 9 | 8,3 | 6 | 3,4 |
| BAM | AM 40-110A/A | 5,7 | 0,75 | 1 | 1,01 | | 17,2 | 15,4 | 14,9 | 14,2 | 13,3 | 12,9 | 12,1 | 11,3 | 10,5 | 8,4 | 5,6 |

### Three-phase

| | | | | | | Q = Flow | | | | | | | | | | | |
|---|---|---|---|---|---|---|---|---|---|---|---|---|---|---|---|---|---|
| | | | | | | m³/h | 0 | 6 | 9 | 12 | 15 | 18 | 21 | 24 | 27 | 30 | 33 |
| Model | | 230V | 400V | P2 | | l/min | | 100 | 150 | 200 | 250 | 300 | 350 | 400 | 450 | 500 | 550 |
| | | A | | kW | HP | H (m) = Total head | | | | | | | | | | | |
| BA | A 50-125CE | 4 | 2,3 | 0,75 | 1 | | 13,7 | 12,8 | 12,2 | 11,3 | 10 | 8,5 | 7 | 5,3 | 3,3 | - | - |
| BA | A 50-125B/A | 4,6 | 2,7 | 1,1 | 1,5 | | 16,5 | 15,5 | 14,9 | 14,2 | 12,9 | 11,6 | 10 | 8,3 | 6,2 | 4 | - |
| BA | A 50-125A/A | 7,5 | 4,3 | 1,5 | 2 | | 20,5 | 19,5 | 19 | 18 | 17 | 15,5 | 14 | 12,5 | 10,5 | 8 | 5 |

### Single-phase

| | | | | | | Q = Flow | | | | | | | | | | | |
|---|---|---|---|---|---|---|---|---|---|---|---|---|---|---|---|---|---|
| | | | | | | m³/h | 0 | 6 | 9 | 12 | 15 | 18 | 21 | 24 | 27 | 30 | 33 |
| Model | | 230V | P2 | | P1 | l/min | | 100 | 150 | 200 | 250 | 300 | 350 | 400 | 450 | 500 | 550 |
| | | A | kW | HP | kW | H (m) = Total head | | | | | | | | | | | |
| BAM | AM 50-125CE | 5,8 | 0,75 | 1 | 1,01 | | 13,7 | 12,8 | 12,2 | 11,3 | 10 | 8,5 | 7 | 5,3 | 3,3 | - | - |
| BAM | AM 50-125BE | 7,4 | 1,1 | 1,5 | 1,44 | | 16,5 | 15,5 | 14,9 | 14,2 | 12,9 | 11,6 | 10 | 8,3 | 6,2 | 4 | - |
| BAM | AM 50-125AE | 9,2 | 1,5 | 2 | 2,1 | | 20,5 | 19,5 | 19 | 18 | 17 | 15,5 | 14 | 12,5 | 10,5 | 8 | 5 |

### Three-phase

| | | | | | | | Q = Flow | | | | | | | | | | | |
|---|---|---|---|---|---|---|---|---|---|---|---|---|---|---|---|---|---|---|
| | | | | | | | m³/h | 0 | 15 | 18 | 24 | 30 | 33 | 36 | 42 | 48 | 54 | 57 |
| Model | | 230V | 400V | 690V | P2 | | l/min | | 250 | 300 | 400 | 500 | 550 | 600 | 700 | 800 | 900 | 950 |
| | | A | | | kW | HP | H (m) = Total head | | | | | | | | | | | |
| BA | A 65-150C/B | 11,5 | 6,6 | - | 2,2 | 3 | | 18,8 | 17,5 | 17 | 16 | 14 | 13 | 11,5 | 9 | 6,5 | - | - |
| BA | A 65-150B/B | 11,5 | 6,6 | - | 3 | 4 | | 22,8 | 21,5 | 21 | 19,5 | 17,5 | 16,5 | 15,5 | 12,5 | 9,5 | 6,5 | - |
| BA | A 65-150A/C | - | 9,6 | 5,5 | 4 | 5,5 | | 30,8 | 29 | 28 | 27 | 25,5 | 24,5 | 23,5 | 21 | 18 | 14 | 11 |

### Three-phase

| | | | | | | Q = Flow | | | | | | | | | | | |
|---|---|---|---|---|---|---|---|---|---|---|---|---|---|---|---|---|---|
| | | | | | | m³/h | 0 | 15 | 18 | 21 | 24 | 30 | 36 | 45 | 54 | 60 | 66 |
| Model | | 400V | 690V | P2 | | l/min | | 250 | 300 | 350 | 400 | 500 | 600 | 750 | 900 | 1000 | 1100 |
| | | A | | kW | HP | H (m) = Total head | | | | | | | | | | | |
| BA | A 80-170B/A | 10,8 | 6,2 | 5,5 | 7,5 | | 28 | 27,3 | 27,3 | 27 | 26,8 | 25,7 | 24,4 | 22,1 | 19 | 16,7 | 13,7 |
| BA | A 80-170A/A | 14,3 | 8,3 | 7,5 | 10 | | 35 | 33,6 | 33,2 | 32,9 | 32,5 | 31,6 | 30,5 | 28,1 | 25,3 | 23,2 | 20,4 |

**P1:** Maximum power input.
**P2:** Rated motor power output.

Tolerances according to UNI EN ISO 9906:2012

A

## Self-Priming Capability with the pump located above the water level

Suction pipe DN 40 mm

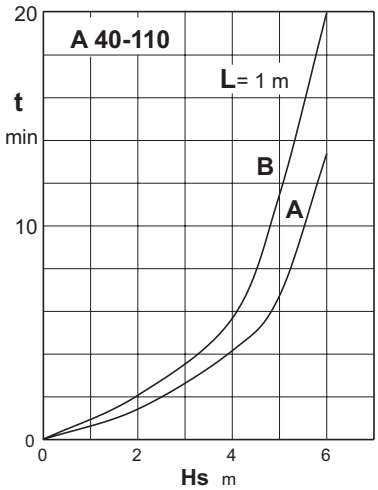


Suction pipe DN 50 mm

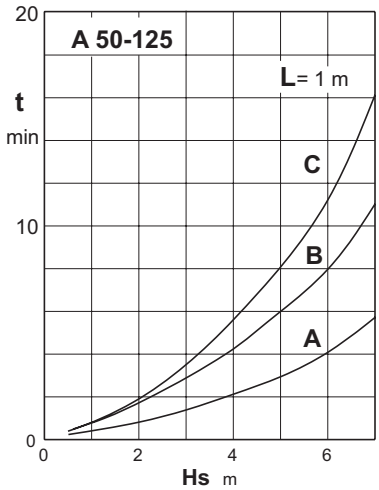


Suction pipe DN 65 mm

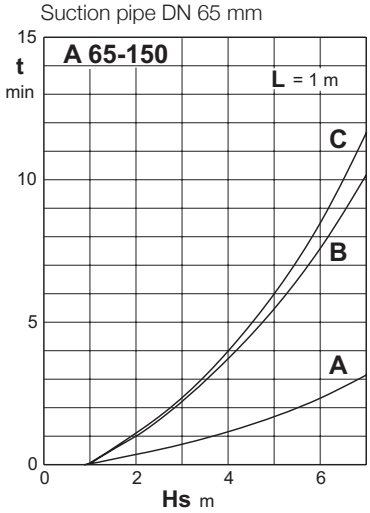


Suction pipe DN 80 mm

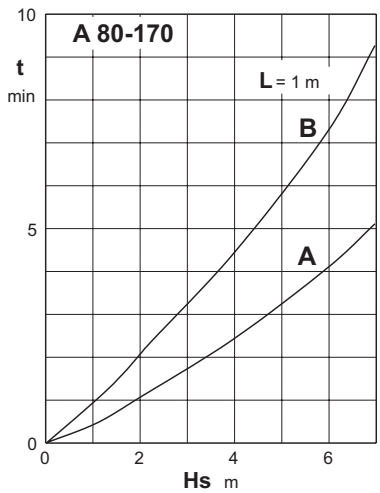


Hs (m) Suction lift.
L (m) Horizontal length of suction pipe above the water level.
t (min) Self-priming time.
Test results with cold water

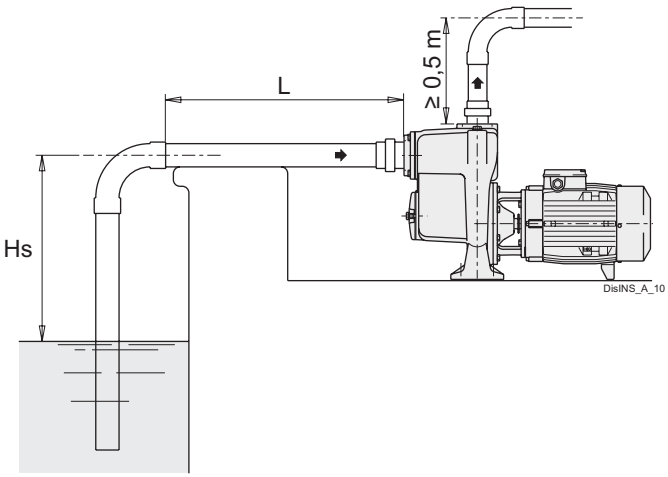

A

## Characteristic curves n ≈ 2900 rpm

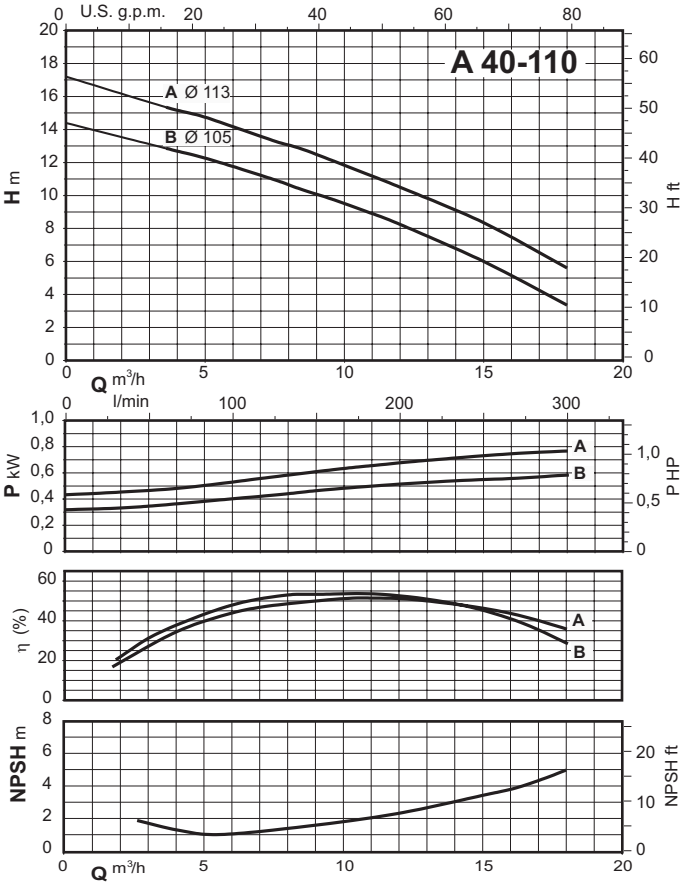


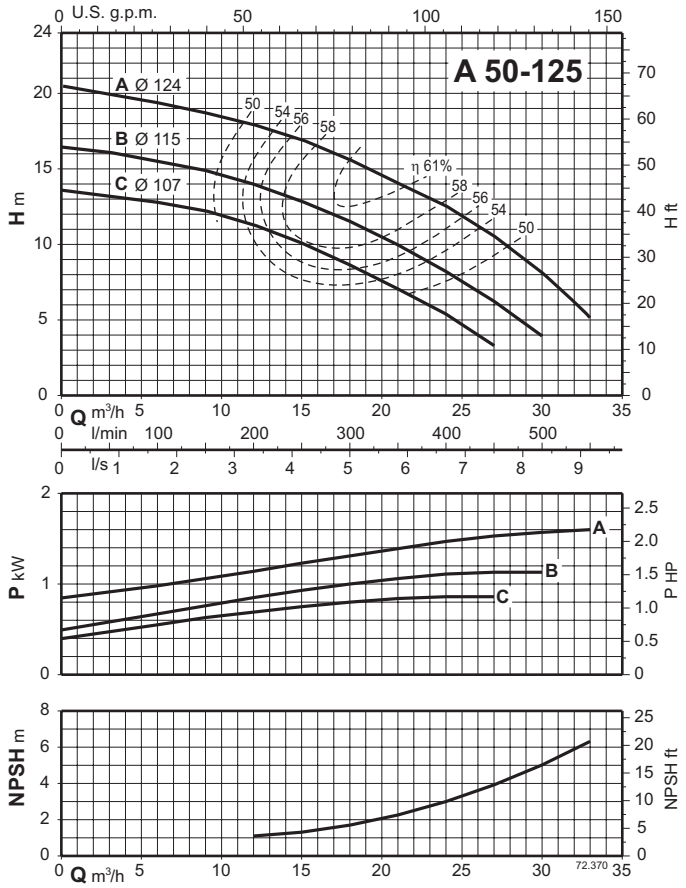


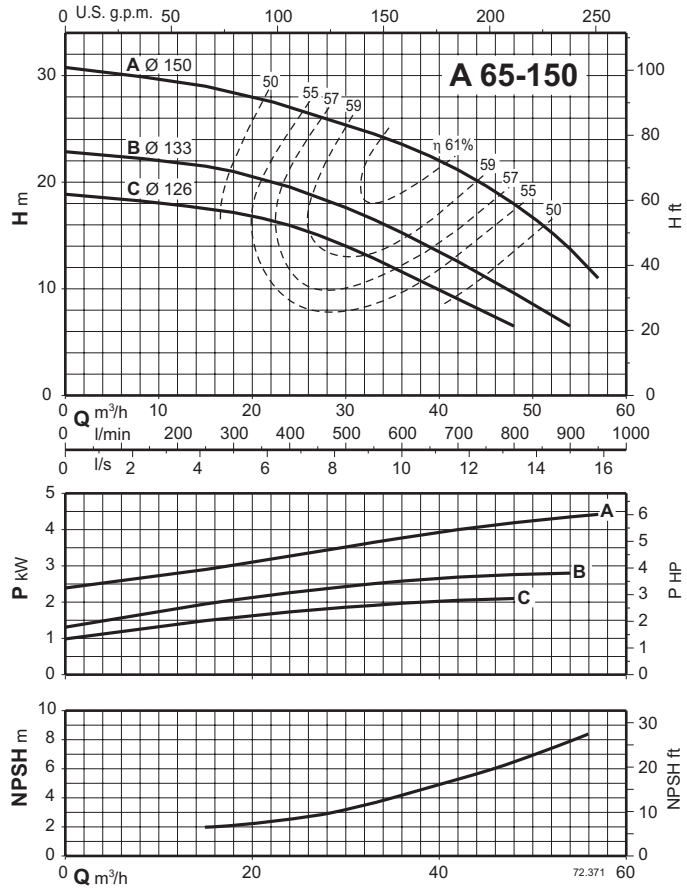


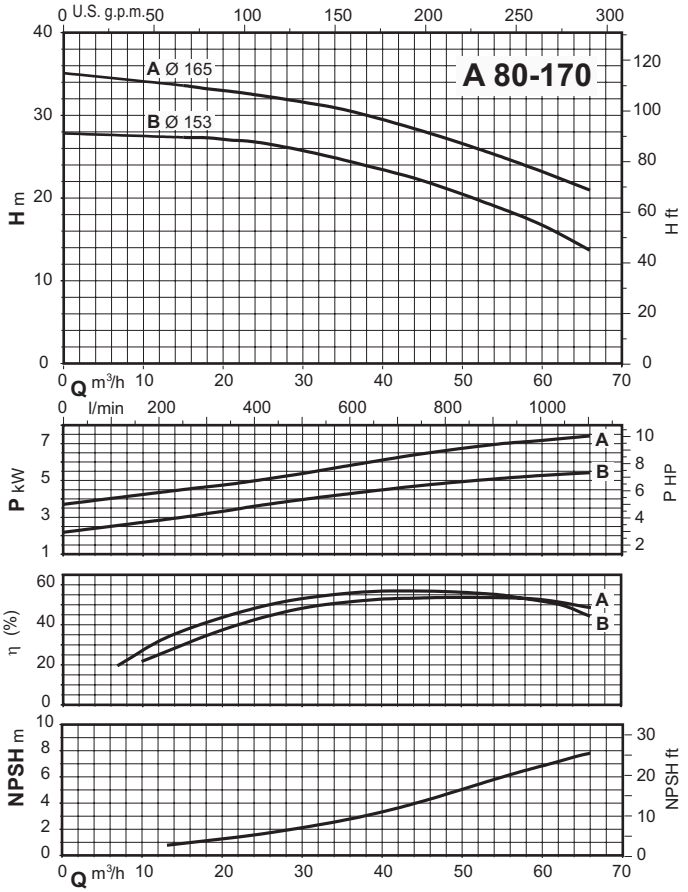

A

## Dimensions and weights

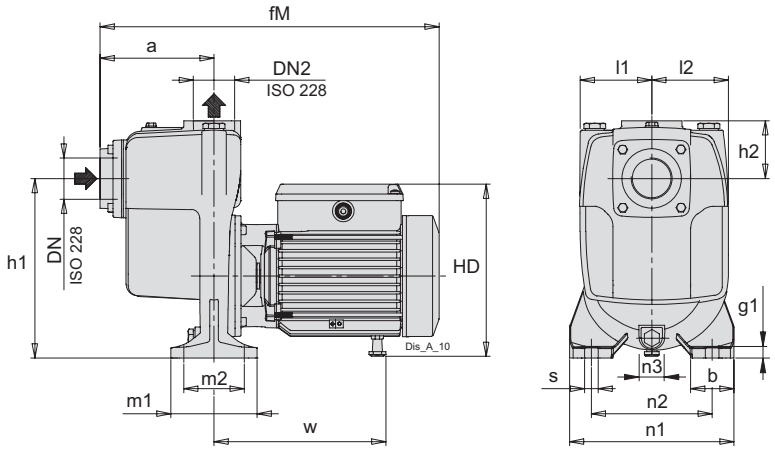


| TYPE | ISO 228 | | mm | | | | | | | | | | | | | | | | kg |
|---|---|---|---|---|---|---|---|---|---|---|---|---|---|---|---|---|---|---|---|
| | DN1 | DN2 | a | b | fM | g1 | h1 | h2 | HD | l1 | l2 | m1 | m2 | n1 | n2 | n3 | s | w | Weight |
| **A 40-110B/A** | G 1 1/2 | G 1 1/2 | 132 | 50 | 393 | 12 | 208 | 67 | 206 | 83 | 89 | 100 | 70 | 190 | 140 | - | 16 | 199 | 19.5 |
| **A 40-110A/B** | G 1 1/2 | G 1 1/2 | 132 | 50 | 393 | 12 | 208 | 67 | 206 | 83 | 89 | 100 | 70 | 190 | 140 | - | 16 | 199 | 20.7 |
| **A 50-125CE** | G 2 | G 2 | 147 | 50 | 490 | 12 | 231 | 64 | 223 | 96 | 102 | 100 | 70 | 190 | 140 | 30 | 16 | 263 | 26.2 |
| **A 50-125B/A** | G 2 | G 2 | 147 | 50 | 490 | 12 | 231 | 64 | 223 | 96 | 102 | 100 | 70 | 190 | 140 | 30 | 16 | 263 | 28.3 |
| **A 50-125A/A** | G 2 | G 2 | 147 | 50 | 490 | 12 | 231 | 64 | 223 | 96 | 102 | 100 | 70 | 190 | 140 | 30 | 16 | 263 | 29.8 |

| TYPE | ISO 228 | | mm | | | | | | | | | | | | | | | | kg |
|---|---|---|---|---|---|---|---|---|---|---|---|---|---|---|---|---|---|---|---|
| | DN1 | DN2 | a | b | fM | g1 | h1 | h2 | HD | l1 | l2 | m1 | m2 | n1 | n2 | n3 | s | w | Weight |
| **AM 40-110B/A** | G 1 1/2 | G 1 1/2 | 132 | 50 | 393 | 12 | 208 | 67 | 206 | 83 | 89 | 100 | 70 | 190 | 140 | - | 16 | 199 | 19.9 |
| **AM 40-110A/A** | G 1 1/2 | G 1 1/2 | 132 | 50 | 393 | 12 | 208 | 67 | 206 | 83 | 89 | 100 | 70 | 190 | 140 | - | 16 | 199 | 20.9 |
| **AM 50-125CE** | G 2 | G 2 | 147 | 50 | 490 | 12 | 231 | 64 | 223 | 96 | 102 | 100 | 70 | 190 | 140 | 30 | 16 | 263 | 28.2 |
| **AM 50-125BE** | G 2 | G 2 | 147 | 50 | 490 | 12 | 231 | 64 | 223 | 96 | 102 | 100 | 70 | 190 | 140 | 30 | 16 | 263 | 30 |
| **AM 50-125AE** | G 2 | G 2 | 147 | 50 | 490 | 12 | 231 | 64 | 223 | 96 | 102 | 100 | 70 | 190 | 140 | 30 | 16 | 263 | 29.9 |

| TYPE | ISO 228 | | mm | | | | | | | | | | | | | | | | kg |
|---|---|---|---|---|---|---|---|---|---|---|---|---|---|---|---|---|---|---|---|
| | DN1 | DN2 | a | b | fM | g1 | h1 | h2 | HD | l1 | l2 | m1 | m2 | n1 | n2 | n3 | s | w | Weight |
| **BA 40-110B/A** | G 1 1/2 | G 1 1/2 | 132 | 50 | 393 | 12 | 208 | 67 | 206 | 83 | 89 | 100 | 70 | 190 | 140 | - | 16 | 199 | 21.6 |
| **BA 40-110A/B** | G 1 1/2 | G 1 1/2 | 132 | 50 | 393 | 12 | 208 | 67 | 206 | 83 | 89 | 100 | 70 | 190 | 140 | - | 16 | 199 | 23.3 |
| **BA 50-125CE** | G 2 | G 2 | 147 | 50 | 490 | 12 | 231 | 64 | 223 | 96 | 102 | 100 | 70 | 190 | 140 | 30 | 16 | 263 | 31.2 |
| **BA 50-125B/A** | G 2 | G 2 | 147 | 50 | 490 | 12 | 231 | 64 | 223 | 96 | 102 | 100 | 70 | 190 | 140 | 30 | 16 | 263 | 32.7 |
| **BA 50-125A/A** | G 2 | G 2 | 147 | 50 | 490 | 12 | 231 | 64 | 223 | 96 | 102 | 100 | 70 | 190 | 140 | 30 | 16 | 263 | 35 |

| TYPE | ISO 228 | | mm | | | | | | | | | | | | | | | | kg |
|---|---|---|---|---|---|---|---|---|---|---|---|---|---|---|---|---|---|---|---|
| | DN1 | DN2 | a | b | fM | g1 | h1 | h2 | HD | l1 | l2 | m1 | m2 | n1 | n2 | n3 | s | w | Weight |
| **BAM 40-110B/A** | G 1 1/2 | G 1 1/2 | 132 | 50 | 393 | 12 | 208 | 67 | 206 | 83 | 89 | 100 | 70 | 190 | 140 | - | 16 | 199 | 22.6 |
| **BAM 40-110A/A** | G 1 1/2 | G 1 1/2 | 132 | 50 | 393 | 12 | 208 | 67 | 206 | 83 | 89 | 100 | 70 | 190 | 140 | - | 16 | 199 | 23.6 |
| **BAM 50-125CE** | G 2 | G 2 | 147 | 50 | 490 | 12 | 231 | 64 | 223 | 96 | 102 | 100 | 70 | 190 | 140 | 30 | 16 | 263 | 32.3 |
| **BAM 50-125BE** | G 2 | G 2 | 147 | 50 | 490 | 12 | 231 | 64 | 223 | 96 | 102 | 100 | 70 | 190 | 140 | 30 | 16 | 263 | 33.5 |
| **BAM 50-125AE** | G 2 | G 2 | 147 | 50 | 490 | 12 | 231 | 64 | 223 | 96 | 102 | 100 | 70 | 190 | 140 | 30 | 16 | 263 | 37 |

A

## Dimensions and weights

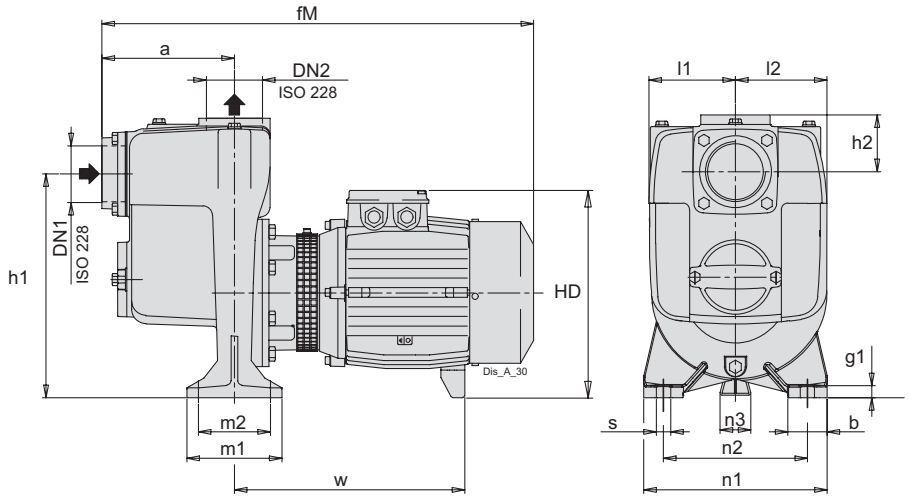


| TYPE | ISO 228 | | mm | | | | | | | | | | | | | | | | kg |
|---|---|---|---|---|---|---|---|---|---|---|---|---|---|---|---|---|---|---|---|
| | DN1 | DN2 | a | b | fM | g1 | h1 | h2 | HD | l1 | l2 | m1 | m2 | n1 | n2 | n3 | s | w | Weight |
| **A 65-150C/B** | G 2 1/2 | G 2 1/2 | 172 | 50 | 635 | 12 | 293 | 75 | 260 | 115 | 121 | 125 | 95 | 240 | 190 | 47 | 16 | 364 | 51.6 |
| **BA 65-150C/B** | G 2 1/2 | G 2 1/2 | 172 | 50 | 583 | 12 | 293 | 75 | 260 | 115 | 121 | 125 | 95 | 240 | 190 | 47 | 16 | 319 | 52.5 |
| **A 65-150B/B** | G 2 1/2 | G 2 1/2 | 172 | 50 | 595 | 12 | 293 | 75 | 270 | 115 | 121 | 125 | 95 | 240 | 190 | 47 | 16 | 324 | 52 |
| **BA 65-150B/A** | G 2 1/2 | G 2 1/2 | 172 | 50 | 595 | 12 | 293 | 75 | 270 | 115 | 121 | 125 | 95 | 240 | 190 | 47 | 16 | 324 | 58.6 |
| **A 65-150A/C** | G 2 1/2 | G 2 1/2 | 172 | 50 | 595 | 12 | 293 | 75 | 270 | 115 | 121 | 125 | 95 | 240 | 190 | 47 | 16 | 324 | 55.3 |
| **BA 65-150A/B** | G 2 1/2 | G 2 1/2 | 172 | 50 | 595 | 12 | 293 | 75 | 270 | 115 | 121 | 125 | 95 | 240 | 190 | 47 | 16 | 324 | 63.2 |

| TYPE | ISO 228 | | mm | | | | | | | | | | | | | | | | kg |
|---|---|---|---|---|---|---|---|---|---|---|---|---|---|---|---|---|---|---|---|
| | DN1 | DN2 | a | b | fM | g1 | h1 | h2 | HD | l1 | l2 | m1 | m2 | n1 | n2 | n3 | s | w | Weight |
| **A 80-170B/A** | G 3 | G 3 | 202 | 60 | 694 | 16 | 342 | 85 | 327 | 132 | 140 | 145 | 110 | 280 | 220 | 49 | 18 | 366 | 80.5 |
| **BA 80-170B/A** | G 3 | G 3 | 202 | 60 | 694 | 16 | 342 | 85 | 327 | 132 | 140 | 145 | 110 | 280 | 220 | 49 | 18 | 366 | 89.9 |
| **A 80-170A/A** | G 3 | G 3 | 202 | 60 | 694 | 16 | 342 | 85 | 327 | 132 | 140 | 145 | 110 | 280 | 220 | 49 | 18 | 366 | 86.1 |
| **BA 80-170A/A** | G 3 | G 3 | 202 | 60 | 694 | 16 | 342 | 85 | 327 | 132 | 140 | 145 | 110 | 280 | 220 | 49 | 18 | 366 | 95.1 |

C

calpeda®

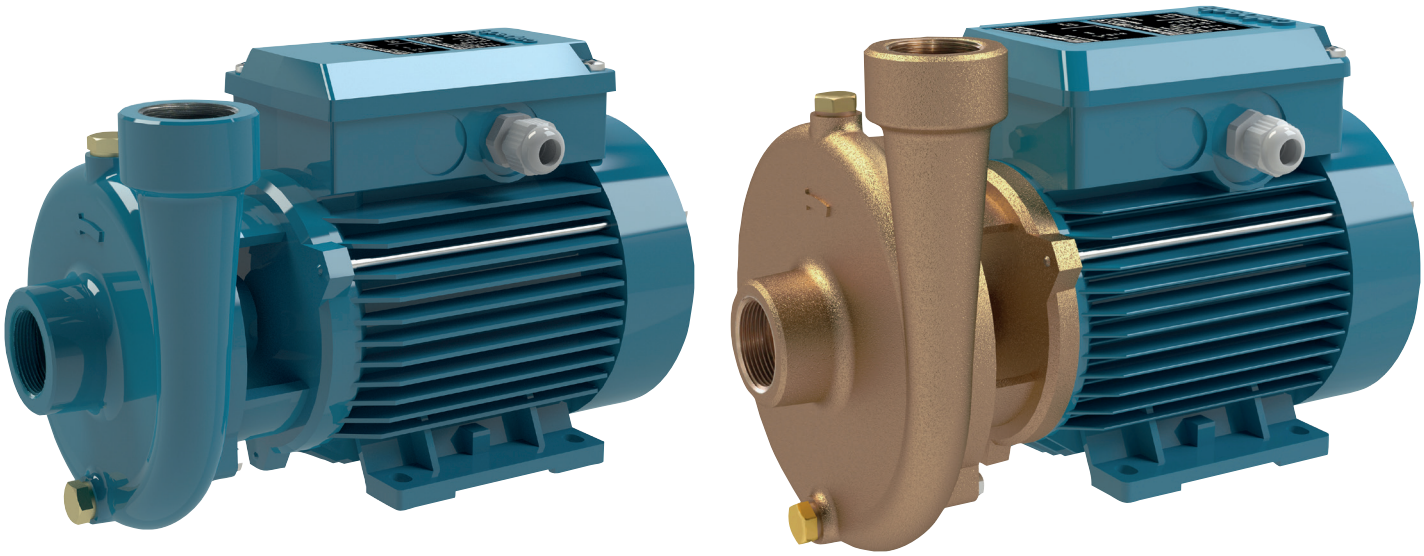

**Coverage chart n ≈ 2900 rpm**

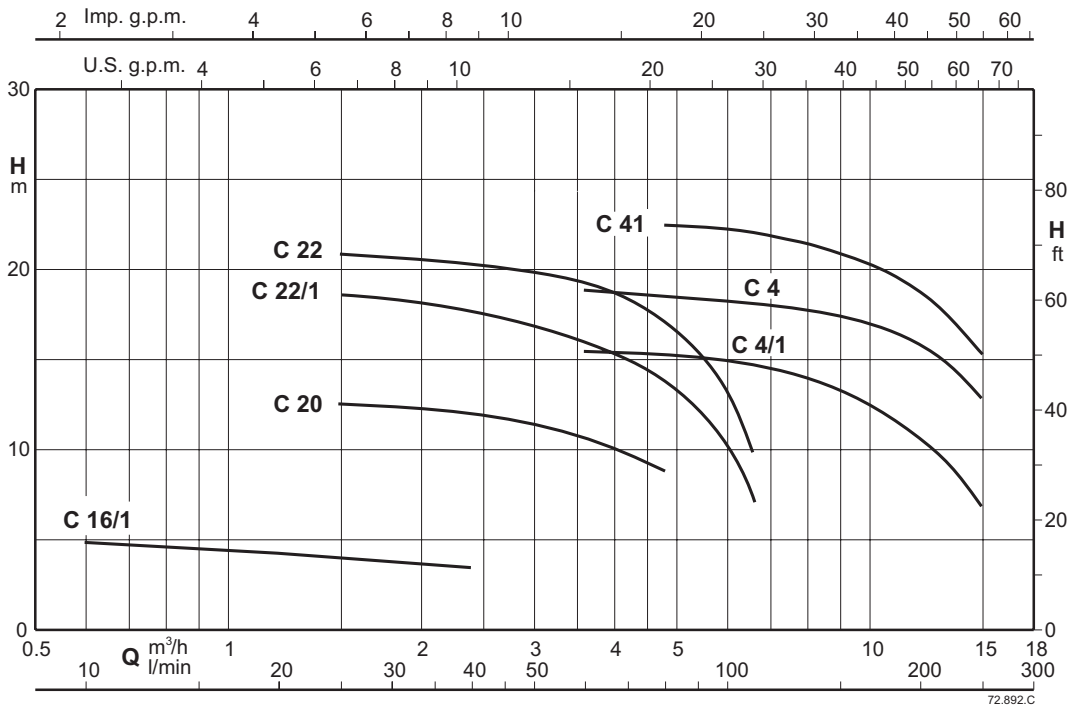


# Centrifugal pumps with open impeller

C

## Construction

Close-coupled centrifugal pumps with open impeller.
Free-flow impeller (vortex or recessed impeller) for type C 16/1E.
**C:** version with pump casing and lantern bracket in cast iron.
**BC:** version with pump casing and lantern bracket in bronze.
The pumps are supplied fully painted.

## Applications

For moderately dirty liquids or emulsions.
For industry and agriculture.

## Operating conditions

Liquid temperature from -10 °C to +90 °C.
Ambient temperature up to 40° C.
Total suction lift up to 8 m.
Maximum permissible working pressure: 6 bar.
Maximum size of solids: 4 mm.
Continuous duty. (S3 60% for C(M) 22E-CM 22/1E).

## Motor

2-pole induction motor, 50 Hz (n ≈ 2900 rpm).
**C:** three-phase 230/400 V ± 10%.
**CM:** single-phase 230 V ± 10%, with thermal protector.
Capacitor inside the terminal box.
Insulation class F.
Protection IP54
Motor suitable for operation with frequency converter from 1,1 kW.
**Single-phase motors with efficiency class IE2 (except for CM 22E, CM 22/1E).**
**IE3 efficiency class for three-phase motors (IE2 up to 0,65 kW).**
Constructed in accordance with EN 60034-1; EN 60034-30-1.
EN 60335-1, EN 60335-2-41.

## Special features on request

Other voltages.
Frequency 60 Hz (as per 60 Hz data sheet).
IP protection: IP55
Special mechanical seal
Higher or lower liquid or ambient temperatures.
Motor suitable for operation with frequency converter up to 0,75 kW.
Design with support.

## Designation

Example: B-CM 20/A
B = Bronze version (no indication: the pump is in the Cast Iron version)
C = Series
M = Single-phase version (no indication: three-phase)
/A = It refers to a revision

**The electropumps comply with the European Regulation no. 547/2012.**

## Materials

| Components | C | BC |
|---|---|---|
| Pump casing | Cast iron GJL 200 EN 1561 | Bronze CC480K EN 1982 |
| Lantern bracket | Cast iron GJL 200 EN 1561 | Bronze CC480K EN 1982 |
| Impeller | Brass CW617N EN 12167 | Brass CW617N EN 12167 |
| Shaft | Stainless Steel 1.4104 EN 10088 (AISI 430F) | Stainless Steel 1.4401 EN 10088 (AISI 316) |
| | AISI 303 Cr-Ni steel for C 41E | |
| Mechanical seal | Carbon - Ceramic - NBR | Carbon - Ceramic - NBR |

C

calpeda®

## Coverage chart n ≈ 2900 rpm

### Three-phase

| | | | | | Q = Flow | | | | | | | | | | | | | | | | | | |
|---|---|---|---|---|---|---|---|---|---|---|---|---|---|---|---|---|---|---|---|---|---|---|---|
| | | | | | m³/h | 0 | 0,6 | 0,9 | 1,2 | 1,5 | 1,8 | 2,4 | 3 | 3,6 | 4,8 | 6 | 6,6 | 8,4 | 9,6 | 10,8 | 12 | 13,2 | 15 |
| Model | 230V | 400V | P2 | | l/min | | 10 | 15 | 20 | 25 | 30 | 40 | 50 | 60 | 80 | 100 | 110 | 140 | 160 | 180 | 200 | 220 | 250 |
| | A | | kW | HP | H (m) = Total head | | | | | | | | | | | | | | | | | | |
| C 16/1E | 1,7 | 1 | 0,15 | 0,2 | | 5,58 | 5 | 4,7 | 4,4 | 4,2 | 4 | 3,6 | - | - | - | - | - | - | - | - | - | - | - |
| C 20E | 1,7 | 1 | 0,25 | 0,34 | | 12,5 | - | - | - | 12,3 | 12,2 | 12 | 11,5 | 10,8 | 9 | - | - | - | - | - | - | - | - |
| C 22/1/A | 2,4 | 1,4 | 0,45 | 0,6 | | 18,1 | - | - | - | 18 | 18 | 17,5 | 17 | 16 | 14 | 10 | 7,5 | - | - | - | - | - | - |
| C 22E | 3 | 1,7 | 0,55 | 0,75 | | 20,5 | - | - | - | 20,5 | 20 | 20 | 19 | 18,5 | 16,5 | 14 | 12 | - | - | - | - | - | - |
| C 4/1/A | 3 | 1,7 | 0,55 | 0,75 | | 15,8 | - | - | - | - | - | - | - | 15,6 | 15,4 | 15,2 | 15 | 14 | 13,1 | 12 | 10,8 | 9,5 | 7 |
| C 4/B | 3,7 | 2,2 | 0,75 | 1 | | 17,5 | - | - | - | - | - | - | - | 17,7 | 17,9 | 17,9 | 17,8 | 17,4 | 16,9 | 16,2 | 15,3 | 14,2 | 11,9 |
| C 41/A | 4,6 | 2,7 | 1,1 | 1,5 | | 22 | - | - | - | - | - | - | - | - | 22,4 | 22,3 | 22,2 | 21,5 | 21 | 20,5 | 19,5 | 18 | 15,5 |

### Three-phase

| | | | | | Q = Flow | | | | | | | | | | | | | | | | | | |
|---|---|---|---|---|---|---|---|---|---|---|---|---|---|---|---|---|---|---|---|---|---|---|---|
| | | | | | m³/h | 0 | 0,6 | 0,9 | 1,2 | 1,5 | 1,8 | 2,4 | 3 | 3,6 | 4,8 | 6 | 6,6 | 8,4 | 9,6 | 10,8 | 12 | 13,2 | 15 |
| Model | 230V | 400V | P2 | | l/min | | 10 | 15 | 20 | 25 | 30 | 40 | 50 | 60 | 80 | 100 | 110 | 140 | 160 | 180 | 200 | 220 | 250 |
| | A | | kW | HP | H (m) = Total head | | | | | | | | | | | | | | | | | | |
| BC 16/1E | 1,7 | 1 | 0,15 | 0,2 | | 5,58 | 5 | 4,7 | 4,4 | 4,2 | 4 | 3,6 | - | - | - | - | - | - | - | - | - | - | - |
| BC 20/A | 2,3 | 1,3 | 0,37 | 0,5 | | 12,5 | - | - | - | 12,3 | 12,2 | 12 | 11,5 | 10,8 | 9 | - | - | - | - | - | - | - | - |
| BC 22/1/A | 2,3 | 1,3 | 0,45 | 0,6 | | 18,1 | - | - | - | 18 | 18 | 17,5 | 17 | 16 | 14 | 10 | 7,5 | - | - | - | - | - | - |
| BC 22/A | 3 | 1,7 | 0,55 | 0,75 | | 20,5 | - | - | - | 20,5 | 20 | 20 | 19 | 18,5 | 16,5 | 14 | 12 | - | - | - | - | - | - |
| BC 41/1E | 4 | 2,3 | 0,75 | 1 | | 17,5 | - | - | - | - | - | - | - | 17,7 | 17,9 | 17,9 | 17,8 | 17,4 | 16,9 | 16,2 | 15,3 | 14,2 | 11,9 |
| BC 41/A | 4,6 | 2,7 | 1,1 | 1,5 | | 22 | - | - | - | - | - | - | - | - | 22,4 | 22,3 | 22,2 | 21,5 | 21 | 20,5 | 19,5 | 18 | 15,5 |

### Single-phase

| | | | | | Q = Flow | | | | | | | | | | | | | | | | | | |
|---|---|---|---|---|---|---|---|---|---|---|---|---|---|---|---|---|---|---|---|---|---|---|---|
| | | | | | m³/h | 0 | 0,6 | 0,9 | 1,2 | 1,5 | 1,8 | 2,4 | 3 | 3,6 | 4,8 | 6 | 6,6 | 8,4 | 9,6 | 10,8 | 12 | 13,2 | 15 |
| Model | 230V | P2 | | P1 | l/min | | 10 | 15 | 20 | 25 | 30 | 40 | 50 | 60 | 80 | 100 | 110 | 140 | 160 | 180 | 200 | 220 | 250 |
| | A | kW | HP | kW | H (m) = Total head | | | | | | | | | | | | | | | | | | |
| CM 16/1E | 1,2 | 0,15 | 0,2 | 0,29 | | 5,58 | 5 | 4,7 | 4,4 | 4,2 | 4 | 3,6 | - | - | - | - | - | - | - | - | - | - | - |
| CM 20E | 2,5 | 0,25 | 0,34 | 0,42 | | 12,5 | - | - | - | 12,3 | 12,2 | 12 | 11,5 | 10,8 | 9 | - | - | - | - | - | - | - | - |
| CM 22/1E | 3 | 0,45 | 0,6 | 0,69 | | 18,1 | - | - | - | 18 | 18 | 17,5 | 17 | 16 | 14 | 10 | 7,5 | - | - | - | - | - | - |
| CM 22E | 3,5 | 0,55 | 0,75 | 0,81 | | 20,5 | - | - | - | 20,5 | 20 | 20 | 19 | 18,5 | 16,5 | 14 | 12 | - | - | - | - | - | - |
| CM 4/1/A | 4,5 | 0,55 | 0,75 | 0,78 | | 15,8 | - | - | - | - | - | - | - | 15,6 | 15,4 | 15,2 | 15 | 14 | 13,1 | 12 | 10,8 | 9,5 | 7 |
| CM 4/A | 5,7 | 0,75 | 1 | 1,01 | | 17,5 | - | - | - | - | - | - | - | 17,7 | 17,9 | 17,9 | 17,8 | 17,4 | 16,9 | 16,2 | 15,3 | 14,2 | 11,9 |
| CM 41E | 7,4 | 1,1 | 1,5 | 1,44 | | 22 | - | - | - | - | - | - | - | - | 22,4 | 22,3 | 22,2 | 21,5 | 21 | 20,5 | 19,5 | 18 | 15,5 |

### Single-phase

| | | | | | Q = Flow | | | | | | | | | | | | | | | | | | |
|---|---|---|---|---|---|---|---|---|---|---|---|---|---|---|---|---|---|---|---|---|---|---|---|
| | | | | | m³/h | 0 | 0,6 | 0,9 | 1,2 | 1,5 | 1,8 | 2,4 | 3 | 3,6 | 4,8 | 6 | 6,6 | 8,4 | 9,6 | 10,8 | 12 | 13,2 | 15 |
| Model | 230V | P2 | | P1 | l/min | | 10 | 15 | 20 | 25 | 30 | 40 | 50 | 60 | 80 | 100 | 110 | 140 | 160 | 180 | 200 | 220 | 250 |
| | A | kW | HP | kW | H (m) = Total head | | | | | | | | | | | | | | | | | | |
| BCM 16/1E | 1,2 | 0,15 | 0,2 | 0,29 | | 5,58 | 5 | 4,7 | 4,4 | 4,2 | 4 | 3,6 | - | - | - | - | - | - | - | - | - | - | - |
| BCM 20/A | 2,8 | 0,37 | 0,5 | 0,57 | | 12,5 | - | - | - | 12,3 | 12,2 | 12 | 11,5 | 10,8 | 9 | - | - | - | - | - | - | - | - |
| BCM 22/1/A | 3,6 | 0,45 | 0,6 | 0,67 | | 18,1 | - | - | - | 18 | 18 | 17,5 | 17 | 16 | 14 | 10 | 7,5 | - | - | - | - | - | - |
| BCM 22/A | 4,5 | 0,55 | 0,75 | 0,78 | | 20,5 | - | - | - | 20,5 | 20 | 20 | 19 | 18,5 | 16,5 | 14 | 12 | - | - | - | - | - | - |
| BCM 41/1E | 5,8 | 0,75 | 1 | 1,01 | | 17,5 | - | - | - | - | - | - | - | 17,7 | 17,9 | 17,9 | 17,8 | 17,4 | 16,9 | 16,2 | 15,3 | 14,2 | 11,9 |
| BCM 41E | 7,4 | 1,1 | 1,5 | 1,44 | | 22 | - | - | - | - | - | - | - | - | 22,4 | 22,3 | 22,2 | 21,5 | 21 | 20,5 | 19,5 | 18 | 15,5 |

**P1:** Maximum power input.
**P2:** Rated motor power output.
**H:** Total head in m
**ρ:** Density 1000kg/m³
**υ:** Kinematic viscosity max 20 mm2/sec.
Tolerances according to UNI EN ISO 9906:2012

C

## Dimensions and weights

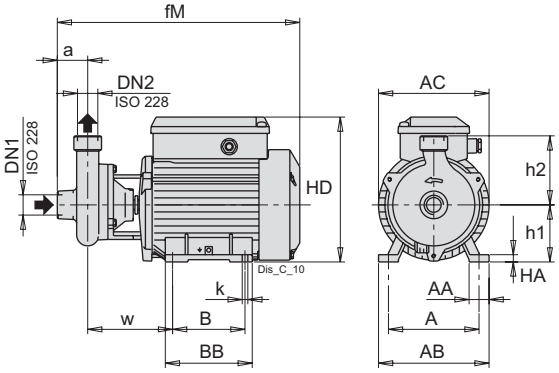


| TYPE | ISO 228 | | mm | | | | | | | | | | | | | | kg |
|---|---|---|---|---|---|---|---|---|---|---|---|---|---|---|---|---|---|
| | DN1 | DN2 | a | A | AA | AB | AC | B | BB | fM | h1 | h2 | HA | HD | K | w | Weight |
| **C 16/1E** | G 1/2 | G 1/2 | 33 | 100 | 22 | 122 | 122 | 80 | 96 | 266 | 63 | 75 | 8 | 160 | 7 | 93 | 5.2 |
| **CM 16/1E** | G 1/2 | G 1/2 | 33 | 100 | 22 | 122 | 122 | 80 | 96 | 266 | 63 | 75 | 8 | 160 | 7 | 93 | 5.2 |

| TYPE | ISO 228 | | mm | | | | | | | | | | | | | | kg |
|---|---|---|---|---|---|---|---|---|---|---|---|---|---|---|---|---|---|
| | DN1 | DN2 | a | A | AA | AB | AC | B | BB | fM | h1 | h2 | HA | HD | K | w | Weight |
| **BC 16/1E** | G 1/2 | G 1/2 | 33 | 100 | 22 | 122 | 122 | 80 | 96 | 266 | 63 | 75 | 8 | 160 | 7 | 93 | 5.4 |
| **BCM 16/1E** | G 1/2 | G 1/2 | 33 | 100 | 22 | 122 | 122 | 80 | 96 | 266 | 63 | 75 | 8 | 160 | 7 | 93 | 5.4 |

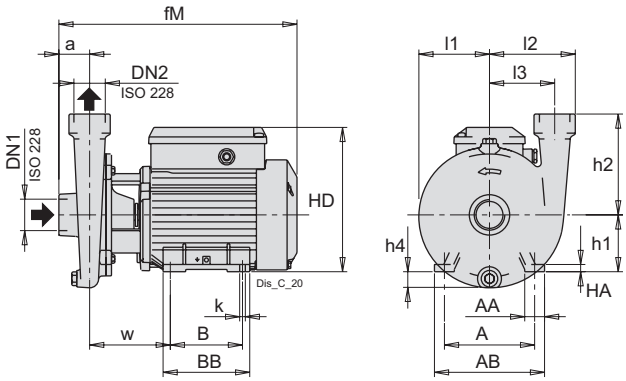


| TYPE | ISO 228 | | mm | | | | | | | | | | | | | | | | | kg |
|---|---|---|---|---|---|---|---|---|---|---|---|---|---|---|---|---|---|---|---|---|
| | DN1 | DN2 | a | A | AA | AB | B | BB | fM | h1 | h2 | h4 | HA | HD | K | l1 | l2 | l5 | w | Weight |
| **C 20E** | G 1 | G 1 | 34 | 100 | 22 | 122 | 80 | 96 | 263 | 63 | 90 | 5 | 8 | 160 | 7 | 67 | 82 | 60 | 88 | 6.3 |
| **C 22/1/A** | G 1 | G 1 | 34 | 100 | 22 | 122 | 80 | 96 | 263 | 63 | 110 | 17 | 8 | 160 | 7 | 77 | 94 | 71 | 88 | 8.4 |
| **C 22E** | G 1 | G 1 | 34 | 100 | 22 | 122 | 80 | 96 | 263 | 63 | 110 | 17 | 8 | 160 | 7 | 77 | 94 | 71 | 88 | 8.3 |
| **CM 20E** | G 1 | G 1 | 34 | 100 | 22 | 122 | 80 | 96 | 263 | 63 | 90 | 5 | 8 | 160 | 7 | 67 | 82 | 60 | 88 | 6.4 |
| **CM 22/1E** | G 1 | G 1 | 34 | 100 | 22 | 122 | 80 | 96 | 263 | 63 | 110 | 17 | 8 | 160 | 7 | 77 | 94 | 71 | 88 | 7.7 |
| **CM 22E** | G 1 | G 1 | 34 | 100 | 22 | 122 | 80 | 96 | 263 | 63 | 110 | 17 | 8 | 160 | 7 | 77 | 94 | 71 | 88 | 8.3 |

C

## Dimensions and weights

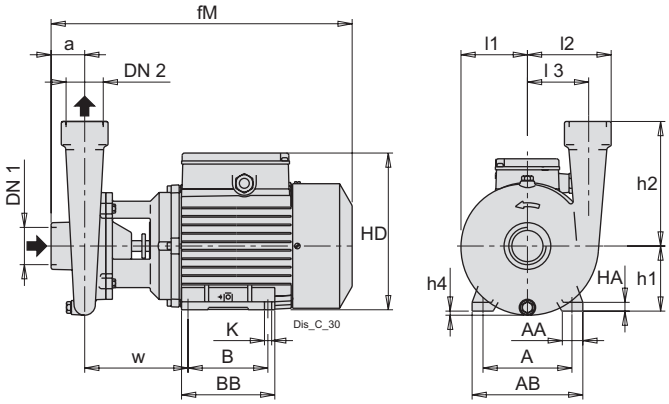


| TYPE | ISO 228 | | mm | | | | | | | | | | | | | | | | | kg |
|---|---|---|---|---|---|---|---|---|---|---|---|---|---|---|---|---|---|---|---|---|
| | DN1 | DN2 | a | A | AA | AB | B | BB | fM | h1 | h2 | h4 | HA | HD | K | l1 | l2 | l5 | w | Weight |
| **C 4/1/A** | G 1 1/2 | G 1 1/2 | 43 | 112 | 22 | 134 | 90 | 106 | 304 | 71 | 160 | 18 | 10 | 182 | 7 | 85 | 108 | 78 | 100 | 10.8 |
| **C 4/B** | G 1 1/2 | G 1 1/2 | 43 | 112 | 22 | 134 | 90 | 106 | 304 | 71 | 160 | 18 | 10 | 182 | 7 | 85 | 108 | 78 | 100 | 13.1 |
| **C 41/A** | G 1 1/2 | G 1 1/2 | 43 | 125 | 30 | 134 | 90 | 106 | 380 | 80 | 160 | 9 | 10 | 208 | 9.5 | 85 | 108 | 78 | 132 | 17.2 |
| **CM 4/1/A** | G 1 1/2 | G 1 1/2 | 43 | 112 | 22 | 134 | 90 | 106 | 304 | 71 | 160 | 18 | 10 | 182 | 7 | 85 | 108 | 78 | 100 | 12 |
| **CM 4/A** | G 1 1/2 | G 1 1/2 | 43 | 112 | 22 | 134 | 90 | 106 | 304 | 71 | 160 | 18 | 10 | 182 | 7 | 85 | 108 | 78 | 100 | 13 |
| **CM 41E** | G 1 1/2 | G 1 1/2 | 43 | 125 | 30 | 134 | 90 | 106 | 380 | 80 | 160 | 9 | 10 | 208 | 9.5 | 85 | 108 | 78 | 132 | 18.5 |

| TYPE | ISO 228 | | mm | | | | | | | | | | | | | | | | | kg |
|---|---|---|---|---|---|---|---|---|---|---|---|---|---|---|---|---|---|---|---|---|
| | DN1 | DN2 | a | A | AA | AB | B | BB | fM | h1 | h2 | h4 | HA | HD | K | l1 | l2 | l5 | w | Weight |
| **BC 20/A** | G 1 | G 1 | 35 | 112 | 22 | 134 | 90 | 106 | 303 | 71 | 90 | - | 10 | 182 | 7 | 70 | 84 | 60 | 105 | 9 |
| **BC 22/1/A** | G 1 | G 1 | 35 | 112 | 22 | 134 | 90 | 106 | 303 | 71 | 110 | 9 | 10 | 182 | 7 | 81 | 93 | 71 | 108 | 9.7 |
| **BC 22/A** | G 1 | G 1 | 35 | 112 | 22 | 134 | 90 | 106 | 303 | 71 | 110 | 9 | 10 | 182 | 7 | 81 | 93 | 71 | 108 | 10.6 |
| **BC 41/1E** | G 1 1/2 | G 1 1/2 | 43 | 125 | 30 | 134 | 100 | 125 | 380 | 80 | 160 | 9 | 10 | 208 | 9.5 | 85 | 108 | 78 | 132 | 16.7 |
| **BC 41/A** | G 1 1/2 | G 1 1/2 | 43 | 125 | 30 | 134 | 100 | 125 | 380 | 80 | 160 | 9 | 10 | 208 | 9.5 | 85 | 108 | 78 | 132 | 19 |
| **BCM 20/A** | G 1 | G 1 | 35 | 112 | 22 | 134 | 90 | 106 | 303 | 71 | 90 | - | 10 | 182 | 7 | 70 | 84 | 60 | 105 | 8.9 |
| **BCM 22/1/A** | G 1 | G 1 | 35 | 112 | 22 | 134 | 90 | 106 | 303 | 71 | 110 | 9 | 10 | 182 | 7 | 81 | 93 | 71 | 108 | 10.5 |
| **BCM 22/A** | G 1 | G 1 | 35 | 112 | 22 | 134 | 90 | 106 | 303 | 71 | 110 | 9 | 10 | 182 | 7 | 81 | 93 | 71 | 108 | 11.8 |
| **BCM 41/1E** | G 1 1/2 | G 1 1/2 | 43 | 125 | 30 | 134 | 100 | 125 | 380 | 80 | 160 | 9 | 10 | 208 | 9.5 | 85 | 108 | 78 | 132 | 18.6 |
| **BCM 41E** | G 1 1/2 | G 1 1/2 | 43 | 125 | 30 | 134 | 100 | 125 | 380 | 80 | 160 | 9 | 10 | 208 | 9.5 | 85 | 108 | 78 | 132 | 19.2 |

C

calpeda®

## Characteristic curves n ≈ 2900 rpm

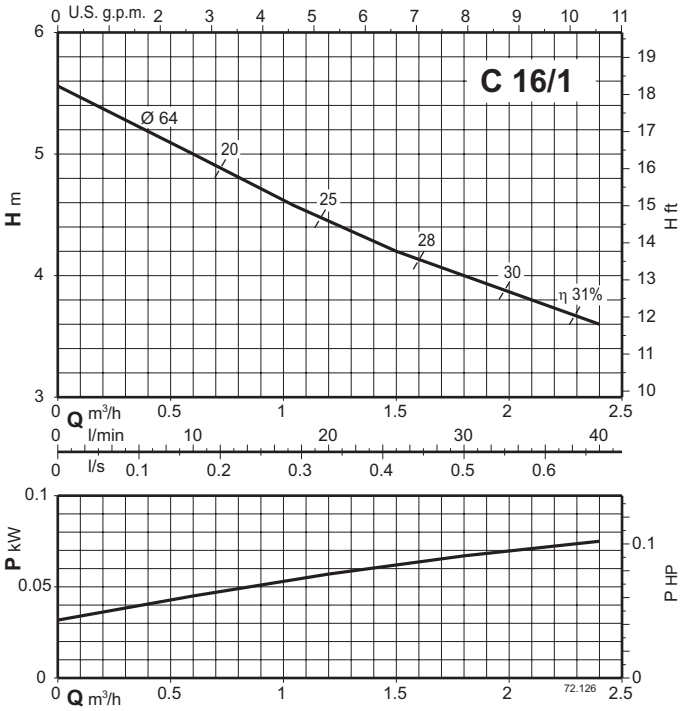


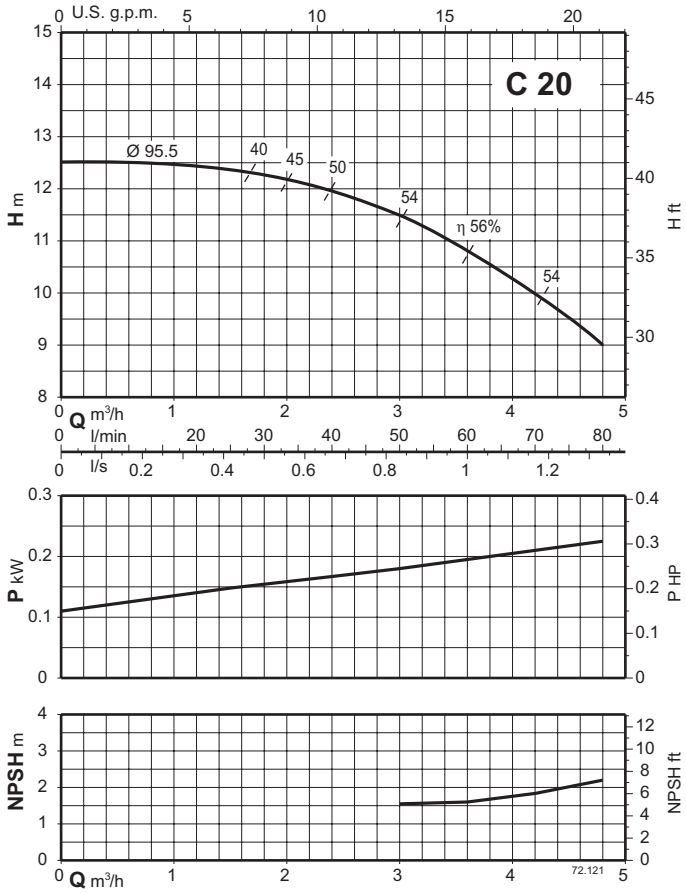


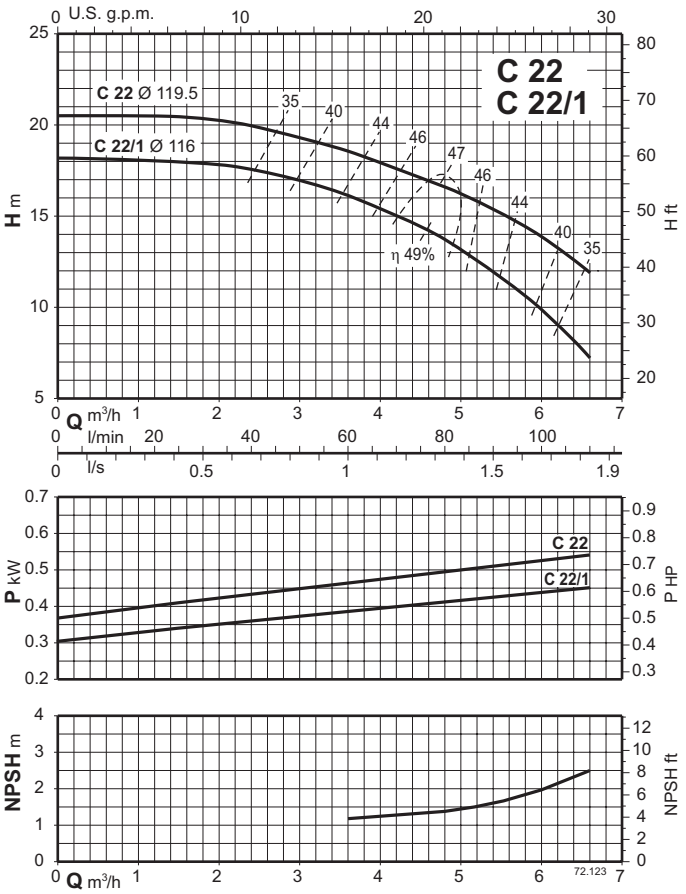

C

## Characteristic curves n ≈ 2900 rpm

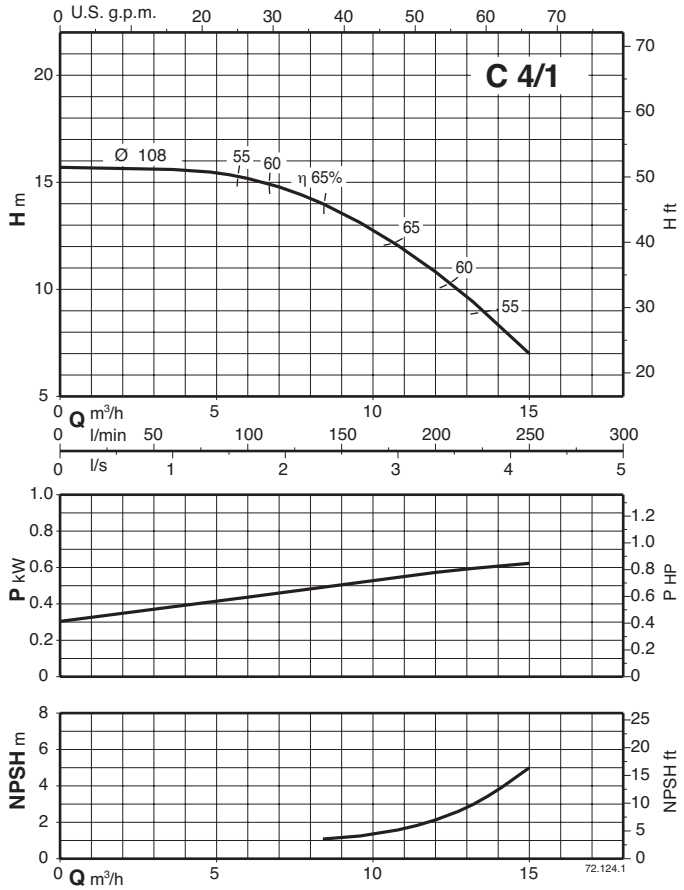


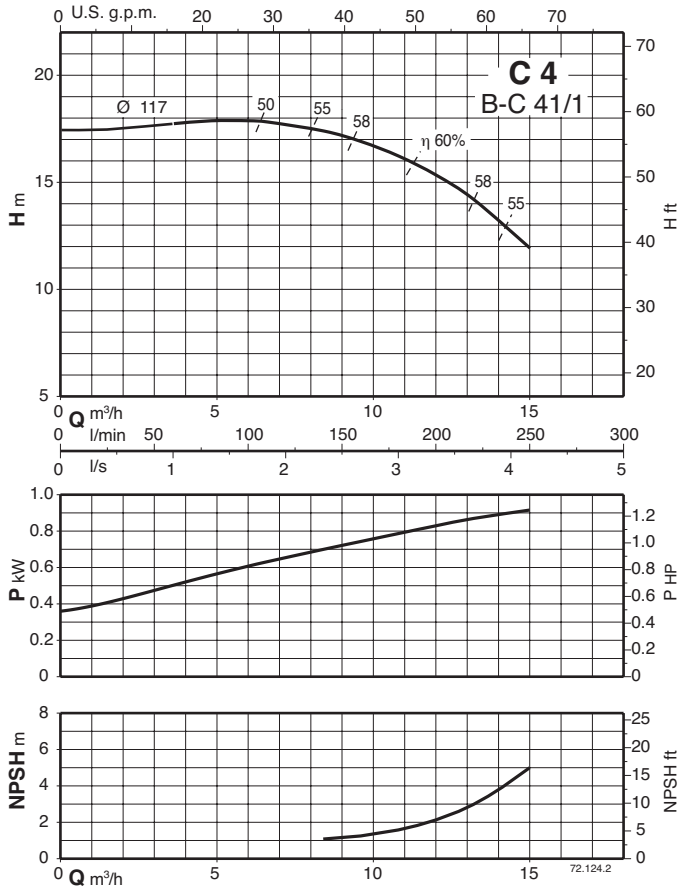


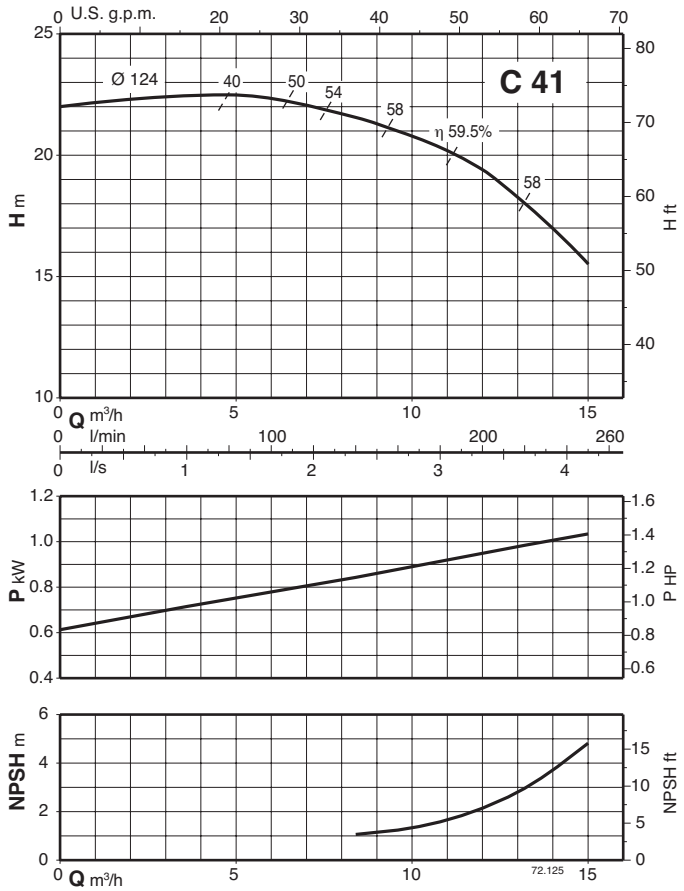

# CT

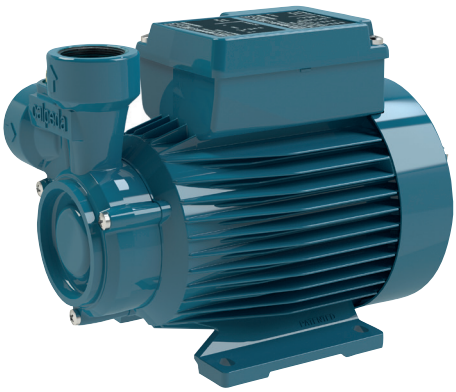

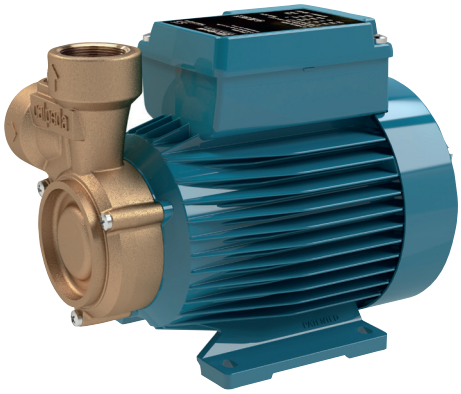

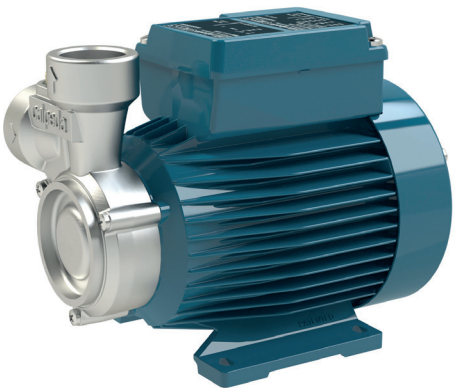

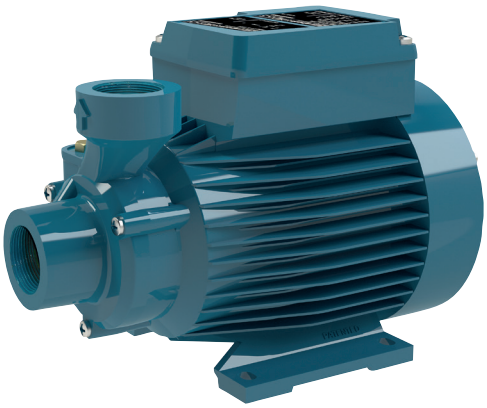

**Coverage chart n ≈ 2900 rpm**

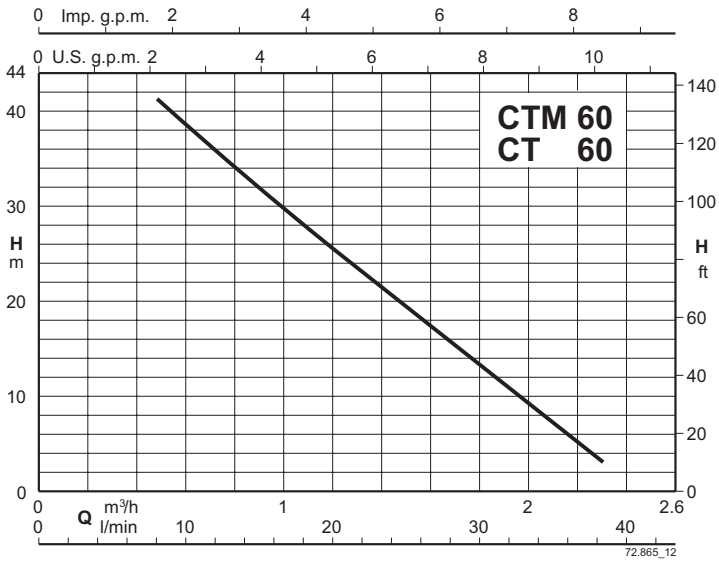


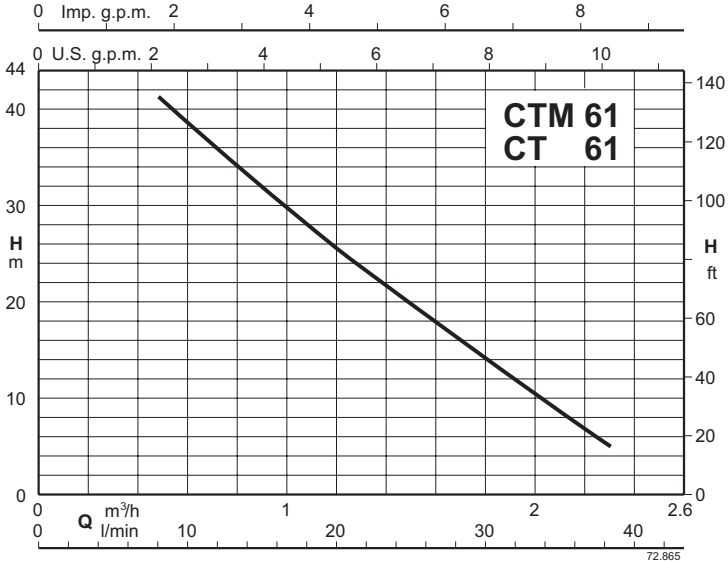


# Peripheral pumps

# CT

## Construction

Peripheral close coupled electropumps
Compact, patented construction with singlepiece motor casing and pump-side wall.
Protected against water entering the motor from outside.
CT: version with pump casing in cast iron.
B-CT 61: version with bronze pump body.
I-CT: version with pump casing in Stainless steel.
The pumps are supplied fully painted.

## Applications

For clean liquids without abrasives, without suspended solids, non-explosive and non-aggressive for the pump materials.
For increasing network pressure (follow local regulations).
Due to their compact dimensions, these pumps are highly suitable for installation in cooling and air-conditioning systems and equipment, as well as for circulation applications.

## Operating conditions

Liquid temperature up to 60 °C.
Ambient temperature up to 40° C.
Total suction lift up to 7 m.
Continuous duty. (S3 60% for three-phase).

## Motor

2-pole induction motor, 50 Hz (n ≈ 2900 rpm).
**CT:** three-phase 230/400 V ± 10%.
**CTM:** single-phase 230 V ± 10%, with thermal protector.
Capacitor inside the terminal box.
Insulation class F.
Protection IP54
**IE2 efficiency class for single-phase motors.**
**IE2 efficiency class for three-phase motors**
Constructed in accordance with EN 60034-1;
EN 60335-1, EN 60335-2-41.

## Special features on request

Other voltages.
Frequency 60 Hz (as per 60 Hz data sheet).
Special mechanical seal

## Designation

BCTM 61/A
B = Bronze version (no indication: the pump is in the Cast Iron version)
I = Stainless steel version (no indication:, the pump is in the Cast Iron version)
CT = Series
M = Single-phase version (no indication: three-phase)
61 = Nominal impeller diameter
/A = It refers to a revision

## Materials

| Component | CT | BCT 61 | ICT 61 |
|---|---|---|---|
| Pump casing | Cast iron GJL 200 EN 1561 | Bronze CC480K EN 1982 | Stainless steel Cr-Ni-Mo 1.4401 EN 10088 (AISI 316) |
| Casing cover | Brass CW617N EN 12167 | Brass CW617N EN 12167 | Brass CW617N EN 12167 |
| Impeller | Brass CW617N EN 12167 | Brass CW617N EN 12167 | Brass CW617N EN 12167 |
| Shaft | Stainless Steel 1.4104 EN 10088 (AISI 430F) | Stainless Steel 1.4104 EN 10088 (AISI 430F) | Stainless Steel 1.4104 EN 10088 (AISI 430F) |
| Mechanical seal | Carbon - Ceramic - NBR | Carbon - Ceramic - NBR | Carbon - Ceramic - NBR |

## Coverage chart n ≈ 2900 rpm

### Three-phase

| | | | | | | Q = Flow | | | | | | | | | |
|---|---|---|---|---|---|---|---|---|---|---|---|---|---|---|---|
| | | | | | | m³/h | 0 | 0,48 | 0,6 | 0,75 | 0,96 | 1,2 | 1,5 | 1,89 | 2,3 |
| Model | | 230V | 400V | P2 | | l/min | | 8 | 10 | 12,5 | 16 | 20 | 25 | 31,5 | 38,3 |
| | | A | | kW | HP | H (m) = Total head | | | | | | | | | |
| - | CT 60/A | 1,9 | 1,1 | 0,33 | 0,45 | | 48 | 41 | 38,5 | 35,5 | 31 | 25,5 | 19 | 11 | 3 |
| BCT, ICT | CT 61/A | 1,9 | 1,1 | 0,33 | 0,45 | | 48 | 41 | 38,5 | 35,5 | 31 | 25,5 | 19 | 11 | 3 |

### Single-phase

| | | | | | | Q = Flow | | | | | | | | | |
|---|---|---|---|---|---|---|---|---|---|---|---|---|---|---|---|
| | | | | | | m³/h | 0 | 0,48 | 0,6 | 0,75 | 0,96 | 1,2 | 1,5 | 1,89 | 2,3 |
| Model | | 230V | P2 | | P1 | l/min | | 8 | 10 | 12,5 | 16 | 20 | 25 | 31,5 | 38,3 |
| | | A | kW | HP | kW | H (m) = Total head | | | | | | | | | |
| - | CTM 60/A | 2,5 | 0,3 | 0,4 | 0,55 | | 48 | 41 | 38,5 | 35,5 | 31 | 25,5 | 19 | 11 | 3 |
| BCTM, ICTM | CTM 61/A | 2,5 | 0,3 | 0,4 | 0,55 | | 48 | 41 | 38,5 | 35,5 | 31 | 25,5 | 19 | 11 | 3 |

## Dimensions and weights

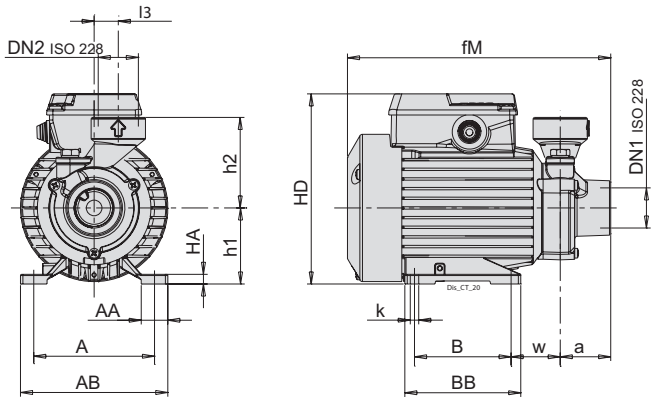


### Three-phase

| TYPE | ISO 228 | | mm | | | | | | | | | | | | | | kg |
|---|---|---|---|---|---|---|---|---|---|---|---|---|---|---|---|---|---|
| | DN1 | DN2 | a | A | AA | AB | B | BB | fM | h1 | h2 | HA | HD | K | l5 | w | Weight |
| CT 60/A | G 1 | G 1 | 42 | 100 | 22 | 122 | 80 | 96 | 223 | 63 | 75 | 8 | 158 | 7 | 20 | 40.5 | 4.6 |

### Single-phase

| TYPE | ISO 228 | | mm | | | | | | | | | | | | | | kg |
|---|---|---|---|---|---|---|---|---|---|---|---|---|---|---|---|---|---|
| | DN1 | DN2 | a | A | AA | AB | B | BB | fM | h1 | h2 | HA | HD | K | l5 | w | Weight |
| CTM 60/A | G 1 | G 1 | 42 | 100 | 22 | 122 | 80 | 96 | 223 | 63 | 75 | 8 | 158 | 7 | 20 | 40.5 | 5 |

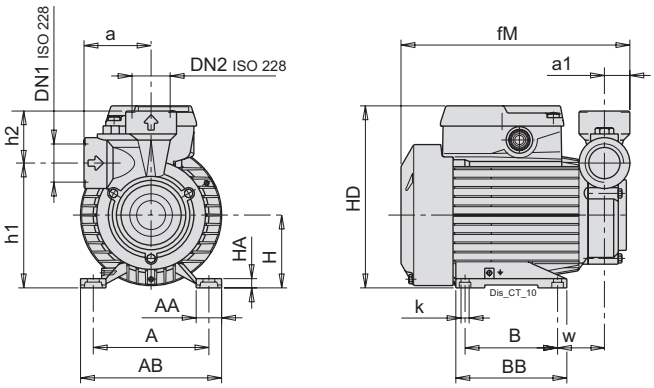


### Three-phase

| TYPE | ISO 228 | | mm | | | | | | | | | | | | | | | kg |
|---|---|---|---|---|---|---|---|---|---|---|---|---|---|---|---|---|---|---|
| | DN1 | DN2 | a | A | a1 | AA | AB | B | BB | fM | H | h1 | h2 | HA | HD | K | w | Weight |
| CT 61/A | G 1 | G 1 | 58 | 100 | 22.5 | 22 | 122 | 80 | 96 | 203 | 63 | 108 | 45 | 8 | 158 | 7 | 40.5 | 4.7 |
| BCT 61/A | G 1 | G 1 | 58 | 100 | 22.5 | 22 | 122 | 80 | 96 | 203 | 63 | 108 | 45 | 8 | 158 | 7 | 40.5 | 4.8 |
| ICT 61 | - | - | - | - | - | - | - | - | - | - | - | - | - | - | - | - | - | - |

### Single-phase

| TYPE | ISO 228 | | mm | | | | | | | | | | | | | | | kg |
|---|---|---|---|---|---|---|---|---|---|---|---|---|---|---|---|---|---|---|
| | DN1 | DN2 | a | A | a1 | AA | AB | B | BB | fM | H | h1 | h2 | HA | HD | K | w | Weight |
| CTM 61/A | G 1 | G 1 | 58 | 100 | 22.5 | 22 | 122 | 80 | 96 | 203 | 63 | 108 | 45 | 8 | 158 | 7 | 40.5 | 5.1 |
| BCTM 61/A | G 1 | G 1 | 58 | 100 | 22.5 | 22 | 122 | 80 | 96 | 203 | 63 | 108 | 45 | 8 | 158 | 7 | 40.5 | 5.1 |
| ICTM 61 | - | - | - | - | - | - | - | - | - | - | - | - | - | - | - | - | - | - |

# T, TP

**Coverage chart n ≈ 2900 rpm**

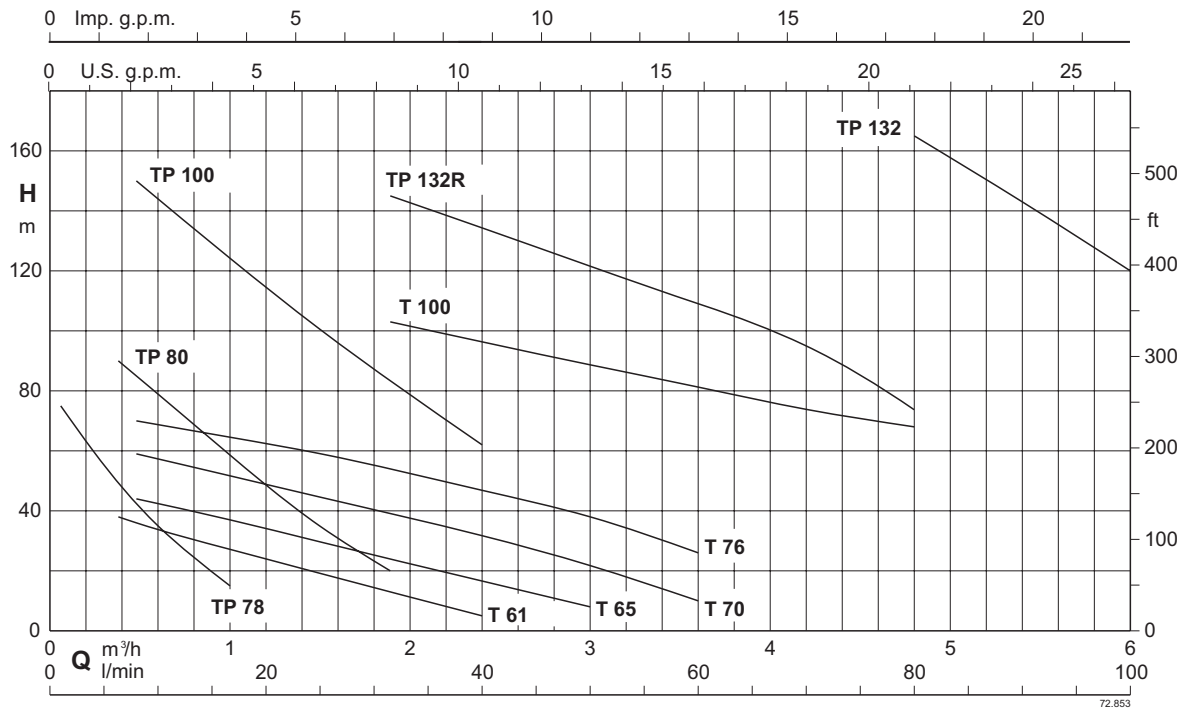


# Peripheral pumps

# T, TP

## Construction

Peripheral close coupled electropumps
T, TP: version with pump casing and lantern bracket in cast iron.
BT, BTP: version with pump casing and lantern bracket in Bronze.
The pumps are supplied fully painted.

## Applications

For clean liquids without abrasives, without suspended solids, non-explosive and non-aggressive for the pump materials.
For increasing network pressure (follow local regulations).
Due to their compact dimensions, these pumps are highly suitable for installation in cooling and air-conditioning systems and equipment, as well as for circulation applications.

## Operating conditions

Liquid temperature from -10 °C to +90 °C.
Ambient temperature up to 40° C.
Total suction lift up to 7 m.
Maximum permissible pressure in the pump casing: 12.5 bar, (16 bar for TP series).
Continuous duty.

## Motor

2-pole induction motor, 50 Hz (n ≈ 2900 rpm).
**T, TP:** three-phase 230/400 V ± 10%.
400/690 V ± 10%, from 4 to 7,5 kW;
**TM, TPM:** single-phase 230 V ± 10% with thermal protector.
Capacitor inside the terminal box.
Insulation class F.
Protection IP54
**IE2 efficiency class for single-phase motors.**
**IE3 efficiency class for three-phase motors (IE2 up to 0,65 kW).**
Constructed in accordance with EN 60034-1; EN 60034-30-1.
EN 60335-1, EN 60335-2-41.

## Special features on request

Other voltages.
Frequency 60 Hz (as per 60 Hz data sheet).
IP protection: IP55
Special mechanical seal
Higher or lower liquid or ambient temperatures.
Construction with bearing bracket.

## Designation

BTM 61E
B = Bronze version (no indication: the pump is in the Cast Iron version)
T = Series
M = Single-phase version (no indication: three-phase)
61 = Nominal impeller diameter
E = It refers to a revision

## Materials

| Component | T, TP | BT, BTP |
|---|---|---|
| Pump casing | Cast iron GJL 200 EN 1561 | Bronze CC480K EN 1982 |
| Lantern bracket | Cast iron GJL 200 EN 1561 | Bronze CC480K EN 1982 |
| Casing cover | Cast iron GJL 200 EN 1561 | Bronze CC480K EN 1982 |
| | Brass CW617N EN 12165 for T 61-65-70 | Brass CW617N EN 12165 for B-T 61-70 |
| Impeller | Brass CW617N EN 12167 | Brass CW617N EN 12167 |
| | Bronze CC480K EN 1982 for TP 132-132R | |
| Shaft | Steel 1.4305 EN 10088 (AISI 303) for T 76, TP 80-100 | Stainless Steel 1.4401 EN 10088 (AISI 316) |
| | Steel 1.4104 EN 10088 (AISI 430F) for T 61-65-70-100, TP 78-132-132R | |
| Mechanical seal | Carbon - Ceramic - NBR | Carbon - Ceramic - NBR |

# T, TP

## Coverage chart n ≈ 2900 rpm

### Three-phase

| | | | | | | | Q = Flow | | | | | | | | | | | | | | | | | | | |
|---|---|---|---|---|---|---|---|---|---|---|---|---|---|---|---|---|---|---|---|---|---|---|---|---|---|---|
| | | | | | | | m³/h | 0 | 0,06 | 0,12 | 0,24 | 0,38 | 0,48 | 0,6 | 0,75 | 1 | 1,2 | 1,5 | 1,89 | 2,4 | 3 | 3,6 | 4,2 | 4,8 | 5,4 | 6 |
| Model | | 230V | 400V | 690V | P2 | | l/min | | 1 | 2 | 4 | 6,33 | 8 | 10 | 12,5 | 16,6 | 20 | 25 | 31,5 | 40 | 50 | 60 | 70 | 80 | 90 | 100 |
| | | A | | | kW | HP | H (m) = Total head | | | | | | | | | | | | | | | | | | | |
| BT | T 61/A | 1,9 | 1,1 | - | 0,33 | 0,45 | | 44,5 | - | - | - | 38 | 36 | 34 | 31,5 | 28 | 24 | 19 | 12,5 | 5 | - | - | - | - | - | - |
| BT | T 65E | 2,8 | 1,6 | - | 0,45 | 0,6 | | 53 | - | - | - | - | 44 | 42 | 40 | 37 | 33 | 29 | 24 | 16 | 8 | - | - | - | - | - |
| BT | T 70/B | 3,7 | 2,2 | - | 0,75 | 1 | | 67,5 | - | - | - | - | 59 | 57 | 55 | 51 | 48 | 43 | 38 | 30 | 22 | 10 | - | - | - | - |
| - | T 76/A | 5,3 | 3,1 | - | 1,1 | 1,5 | | 78 | - | - | - | - | 70 | 68 | 67 | 65 | 62 | 58 | 53 | 46 | 38 | 26 | - | - | - | - |
| BTP | TP 78/A | 2,3 | 1,3 | - | 0,37 | 0,5 | | 82 | 75 | 70 | 60 | 50 | 42 | 35 | 25 | 15 | - | - | - | - | - | - | - | - | - | - |
| BTP | TP 80E | 4 | 2,3 | - | 0,75 | 1 | | 115 | - | - | - | 90 | 85 | 79 | 73 | 61 | 48 | 34 | 20 | - | - | - | - | - | - | - |
| - | TP 100/B | 9,6 | 5,5 | - | 2,2 | 3 | | 184 | - | - | - | - | 150 | 144 | 136 | 125 | 115 | 100 | 84 | 62 | - | - | - | - | - | - |
| - | T 100/A | 11,5 | 6,6 | - | 3 | 4 | | 124,5 | - | - | - | - | - | - | - | - | - | - | 103 | 97 | 89 | 82 | 75 | 68 | - | - |
| - | TP 132R/A | - | 10,8 | 6,2 | 5,5 | 7,5 | | 186 | - | - | - | - | - | - | - | - | - | - | 145 | 135 | 120 | 110 | 95 | 70 | - | - |
| - | TP 132/A | - | 14,3 | 8,3 | 7,5 | 10 | | 372 | - | - | - | - | - | - | - | - | - | - | - | - | - | - | - | 165 | 143 | 120 |

### Single-phase

| | | | | | | | Q = Flow | | | | | | | | | | | | | | | |
|---|---|---|---|---|---|---|---|---|---|---|---|---|---|---|---|---|---|---|---|---|---|---|
| | | | | | | | m³/h | 0 | 0,06 | 0,12 | 0,24 | 0,38 | 0,48 | 0,6 | 0,75 | 1 | 1,2 | 1,5 | 1,89 | 2,4 | 3 | 3,6 |
| Model | | 230V | P2 | | P1 | | l/min | | 1 | 2 | 4 | 6,33 | 8 | 10 | 12,5 | 16,6 | 20 | 25 | 31,5 | 40 | 50 | 60 |
| | | A | kW | HP | kW | | H (m) = Total head | | | | | | | | | | | | | | | |
| BTM | TM 61E | 2,5 | 0,33 | 0,45 | 0,52 | | | 44,5 | - | - | - | 38 | 36 | 34 | 31,5 | 28 | 24 | 19 | 12,5 | 5 | - | - |
| BTM | TM 65E | 3,5 | 0,45 | 0,6 | 0,67 | | | 53 | - | - | - | - | 44 | 42 | 40 | 37 | 33 | 29 | 24 | 16 | 8 | - |
| BTM | TM 70/A | 5,7 | 0,75 | 1 | 1,01 | | | 67,5 | - | - | - | - | 59 | 57 | 55 | 51 | 48 | 43 | 38 | 30 | 22 | 10 |
| - | TM 76E | 7,4 | 1,1 | 1,5 | 1,44 | | | 78 | - | - | - | - | 70 | 68 | 67 | 65 | 62 | 58 | 53 | 46 | 38 | 26 |
| BTPM | TPM 78/A | 2,8 | 0,37 | 0,5 | 0,57 | | | 82 | 75 | 70 | 60 | 50 | 42 | 35 | 25 | 15 | - | - | - | - | - | - |
| BTPM | TPM 80E | 5,8 | 0,75 | 1 | 1,01 | | | 115 | - | - | - | 90 | 85 | 79 | 73 | 61 | 48 | 34 | 20 | - | - | - |

**P1:** Maximum power input.
**P2:** Rated motor power output.
**H:** Total head in m

# T, TP

## Dimensions and weights

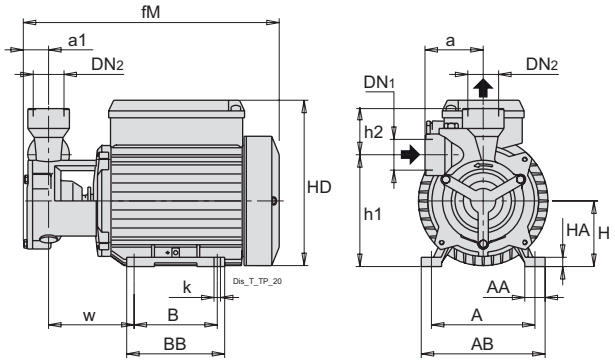


| TYPE | ISO 228 | | mm | | | | | | | | | | | | | | | kg |
|---|---|---|---|---|---|---|---|---|---|---|---|---|---|---|---|---|---|---|
| | DN1 | DN2 | a | A | a1 | AA | AB | B | BB | fM | H | h1 | h2 | HA | HD | K | w | Weight |
| **T 61/A** | G 1 | G 1 | 58 | 100 | 24 | 22 | 122 | 80 | 96 | 244 | 63 | 108 | 45 | 8 | 160 | 7 | 80 | 6.2 |
| **T 65E** | G 1 | G 1 | 58 | 100 | 24 | 22 | 122 | 80 | 96 | 244 | 63 | 108 | 45 | 8 | 160 | 7 | 80 | 7 |
| **T 70/B** | G 1 | G 1 | 63 | 112 | 24 | 22 | 134 | 90 | 106 | 278 | 71 | 121 | 50 | 10 | 182 | 7 | 93 | 10.8 |
| **TP 78/A** | G 1/2 | G 1/2 | 56 | 112 | 22 | 22 | 134 | 90 | 106 | 276 | 71 | 127 | 24 | 10 | 182 | 7 | 93 | 8.2 |

| TYPE | ISO 228 | | mm | | | | | | | | | | | | | | | kg |
|---|---|---|---|---|---|---|---|---|---|---|---|---|---|---|---|---|---|---|
| | DN1 | DN2 | a | A | a1 | AA | AB | B | BB | fM | H | h1 | h2 | HA | HD | K | w | Weight |
| **TM 61E** | G 1 | G 1 | 58 | 100 | 24 | 22 | 122 | 80 | 96 | 244 | 63 | 108 | 65 | 8 | 160 | 7 | 80 | 5.3 |
| **TM 65E** | G 1 | G 1 | 58 | 100 | 24 | 22 | 122 | 80 | 96 | 244 | 63 | 108 | 65 | 8 | 160 | 7 | 80 | 7.2 |
| **TM 70/A** | G 1 | G 1 | 63 | 112 | 24 | 22 | 134 | 90 | 106 | 278 | 71 | 121 | 50 | 10 | 182 | 7 | 93 | 10.8 |
| **TPM 78/A** | G 1/2 | G 1/2 | 56 | 112 | 22 | 22 | 134 | 90 | 106 | 276 | 71 | 127 | 24 | 10 | 182 | 7 | 93 | 8.2 |

| TYPE | ISO 228 | | mm | | | | | | | | | | | | | | | kg |
|---|---|---|---|---|---|---|---|---|---|---|---|---|---|---|---|---|---|---|
| | DN1 | DN2 | a | A | a1 | AA | AB | B | BB | fM | H | h1 | h2 | HA | HD | K | w | Weight |
| **BT 61/A** | G 1 | G 1 | 58 | 100 | 24 | 22 | 122 | 80 | 96 | 244 | 63 | 108 | 45 | 8 | 160 | 7 | 80 | 6.4 |
| **BT 65E** | G 1 | G 1 | 58 | 100 | 24 | 22 | 122 | 80 | 96 | 244 | 63 | 108 | 45 | 8 | 160 | 7 | 80 | 7.3 |
| **BT 70/B** | G 1 | G 1 | 63 | 112 | 24 | 22 | 134 | 90 | 106 | 278 | 71 | 121 | 50 | 10 | 182 | 7 | 93 | 11.1 |
| **BTP 78/A** | G 1/2 | G 1/2 | 56 | 112 | 22 | 22 | 134 | 90 | 106 | 276 | 71 | 127 | 24 | 10 | 182 | 7 | 93 | 8.6 |

| TYPE | ISO 228 | | mm | | | | | | | | | | | | | | | kg |
|---|---|---|---|---|---|---|---|---|---|---|---|---|---|---|---|---|---|---|
| | DN1 | DN2 | a | A | a1 | AA | AB | B | BB | fM | H | h1 | h2 | HA | HD | K | w | Weight |
| **BTM 61E** | G 1 | G 1 | 58 | 100 | 24 | 22 | 122 | 80 | 96 | 244 | 63 | 108 | 65 | 8 | 160 | 7 | 80 | 5.9 |
| **BTM 65E** | G 1 | G 1 | 58 | 100 | 24 | 22 | 122 | 80 | 96 | 244 | 63 | 108 | 65 | 8 | 160 | 7 | 80 | 7.4 |
| **BTM 70/A** | G 1 | G 1 | 63 | 112 | 24 | 22 | 134 | 90 | 106 | 278 | 71 | 121 | 50 | 10 | 182 | 7 | 93 | 11.1 |
| **BTPM 78/A** | G 1/2 | G 1/2 | 56 | 112 | 22 | 22 | 134 | 90 | 106 | 276 | 71 | 127 | 24 | 10 | 182 | 7 | 93 | 8.7 |

# T, TP

## Dimensions and weights

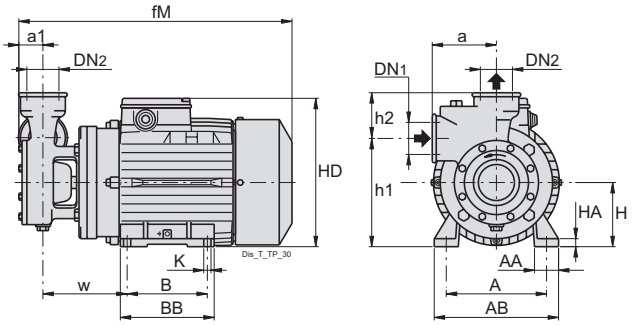


| TYPE | ISO 228 | | mm | | | | | | | | | | | | | | | kg |
|---|---|---|---|---|---|---|---|---|---|---|---|---|---|---|---|---|---|---|
| | DN1 | DN2 | a | A | a1 | AA | AB | B | BB | fM | H | h1 | h2 | HA | HD | K | w | Weight |
| **T 76/A** | G 1 1/4 | G 1 1/4 | 80 | 125 | 26 | 30 | 155 | 100 | 117 | 338 | 80 | 136 | 56 | 10 | 208 | 9 | 105 | 16.5 |
| **T 100/A** | G 1 1/4 | G 1 1/4 | 95 | 140 | 32 | 40 | 180 | 125 | 152 | 410 | 90 | 161 | 59 | 12 | 226 | 9.5 | 121 | 29.5 |
| **TP 80E** | G 3/4 | G 3/4 | 60 | 125 | 27 | 30 | 155 | 100 | 117 | 332 | 80 | 135 | 35 | 10 | 208 | 9 | 104 | 13.8 |
| **TP 100/B** | G 3/4 | G 3/4 | 65 | 125 | 27 | 30 | 155 | 100 | 117 | 387 | 80 | 142 | 38 | 10 | 208 | 9 | 113 | 22.1 |
| **TP 132R/A** | G 1 1/4 | G 1 1/4 | 100 | 190 | 42 | 50 | 230 | 140 | 180 | 485 | 112 | 202 | 70 | 14 | 272 | 11.5 | 183 | 57.1 |
| **TP 132/A** | G 1 1/4 | G 1 1/4 | 100 | 190 | 42 | 50 | 230 | 140 | 180 | 485 | 112 | 202 | 70 | 14 | 272 | 11.5 | 183 | 62.1 |

| TYPE | ISO 228 | | mm | | | | | | | | | | | | | | | kg |
|---|---|---|---|---|---|---|---|---|---|---|---|---|---|---|---|---|---|---|
| | DN1 | DN2 | a | A | a1 | AA | AB | B | BB | fM | H | h1 | h2 | HA | HD | K | w | Weight |
| **TM 76E** | G 1 1/4 | G 1 1/4 | 80 | 125 | 26 | 30 | 155 | 100 | 117 | 338 | 80 | 136 | 56 | 10 | 208 | 9 | 105 | 18 |
| **TPM 80E** | G 3/4 | G 3/4 | 60 | 125 | 27 | 30 | 155 | 100 | 117 | 332 | 80 | 135 | 35 | 10 | 208 | 9 | 104 | 16 |

| TYPE | ISO 228 | | mm | | | | | | | | | | | | | | | kg |
|---|---|---|---|---|---|---|---|---|---|---|---|---|---|---|---|---|---|---|
| | DN1 | DN2 | a | A | a1 | AA | AB | B | BB | fM | H | h1 | h2 | HA | HD | K | w | Weight |
| **BTP 80E** | G 3/4 | G 3/4 | 60 | 125 | 27 | 30 | 155 | 100 | 117 | 332 | 80 | 135 | 35 | 10 | 208 | 9 | 104 | 14.4 |

| TYPE | ISO 228 | | mm | | | | | | | | | | | | | | | kg |
|---|---|---|---|---|---|---|---|---|---|---|---|---|---|---|---|---|---|---|
| | DN1 | DN2 | a | A | a1 | AA | AB | B | BB | fM | H | h1 | h2 | HA | HD | K | w | Weight |
| **BTPM 80E** | G 3/4 | G 3/4 | 60 | 125 | 27 | 30 | 155 | 100 | 117 | 332 | 80 | 135 | 35 | 10 | 208 | 9 | 104 | 15.5 |

# T, TP

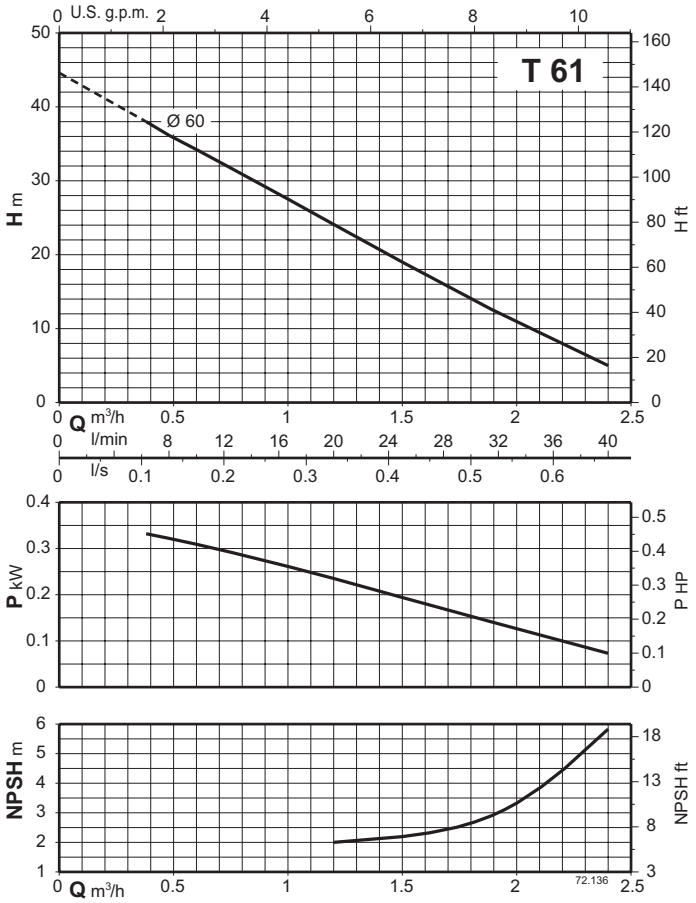
T 61
Ø 60
U.S. g.p.m.
H m
H ft
Q m³/h
l/min
l/s
P kW
P HP
NPSH m
NPSH ft
72.136

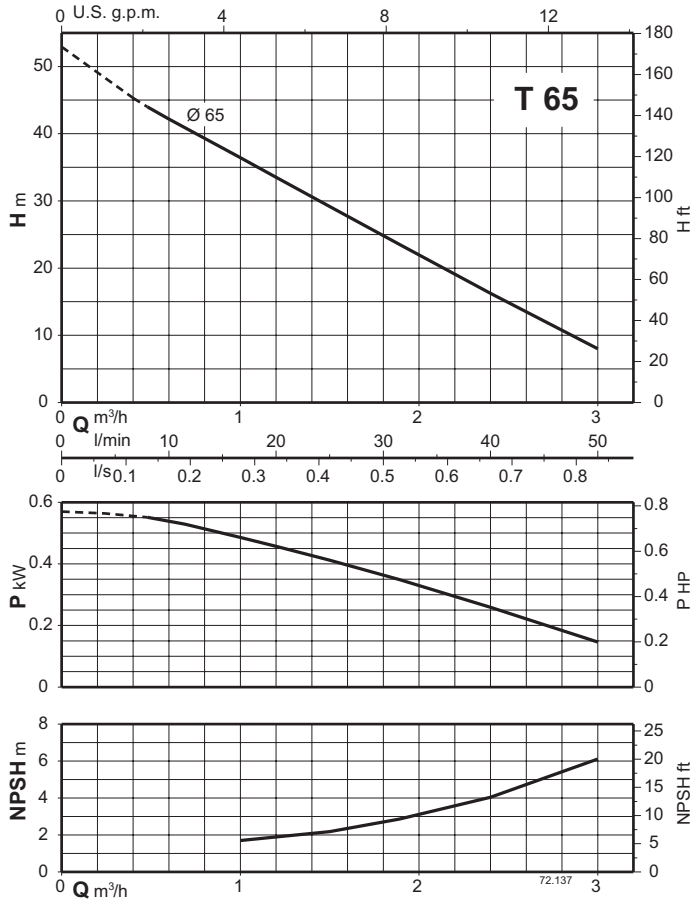
T 65
Ø 65
U.S. g.p.m.
H m
H ft
Q m³/h
l/min
l/s
P kW
P HP
NPSH m
NPSH ft
72.137

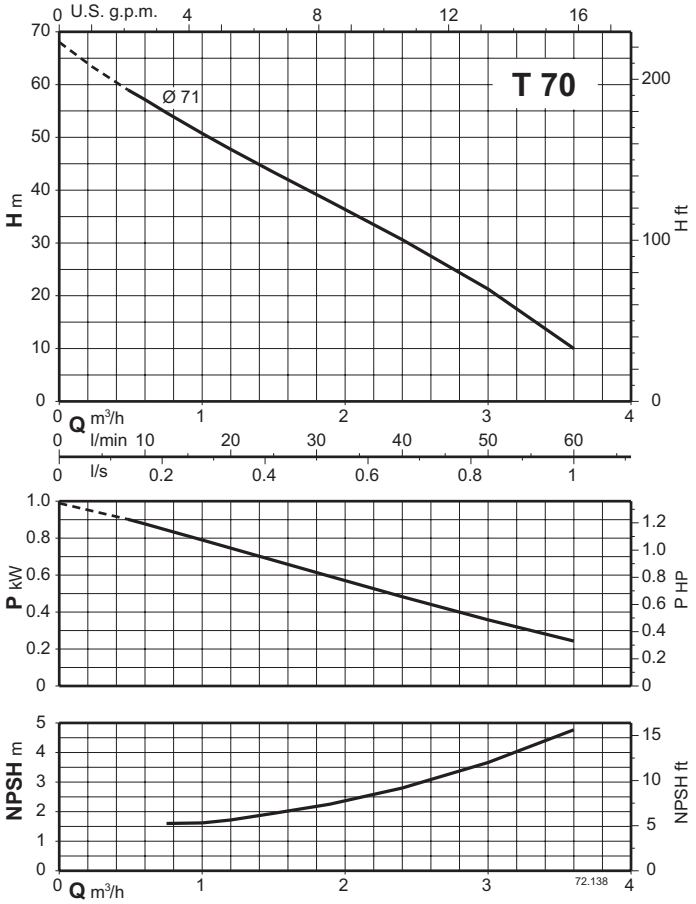
T 70
Ø 71
U.S. g.p.m.
H m
H ft
Q m³/h
l/min
l/s
P kW
P HP
NPSH m
NPSH ft
72.138

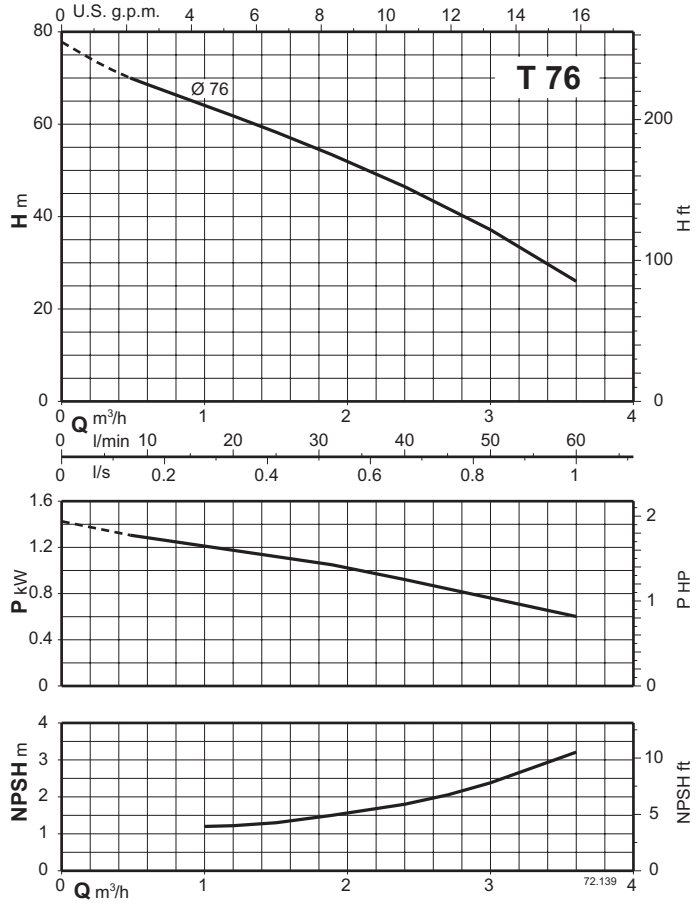
T 76
Ø 76
U.S. g.p.m.
H m
H ft
Q m³/h
l/min
l/s
P kW
P HP
NPSH m
NPSH ft
72.139

# T, TP

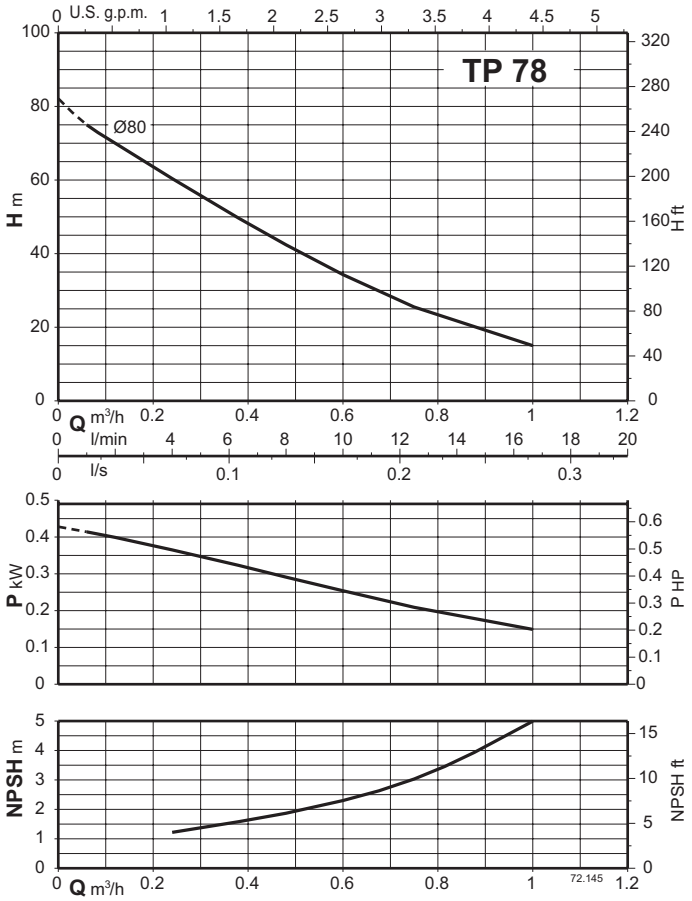
TP 78
Ø80
U.S. g.p.m.
H m
H ft
Q m³/h
l/min
l/s
P kW
P HP
NPSH m
NPSH ft
72.145

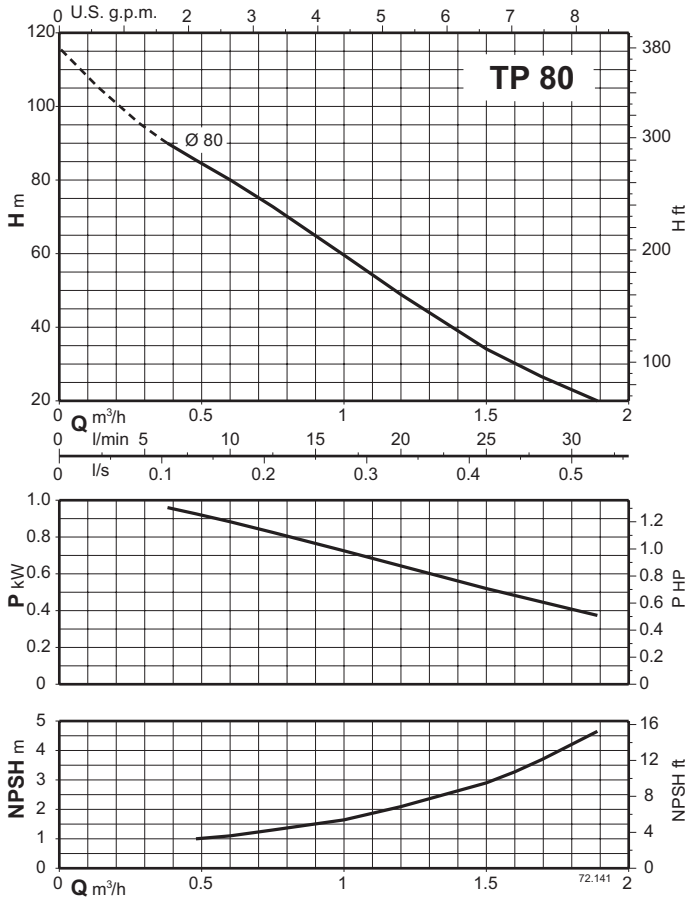
TP 80
Ø 80
U.S. g.p.m.
H m
H ft
Q m³/h
l/min
l/s
P kW
P HP
NPSH m
NPSH ft
72.141

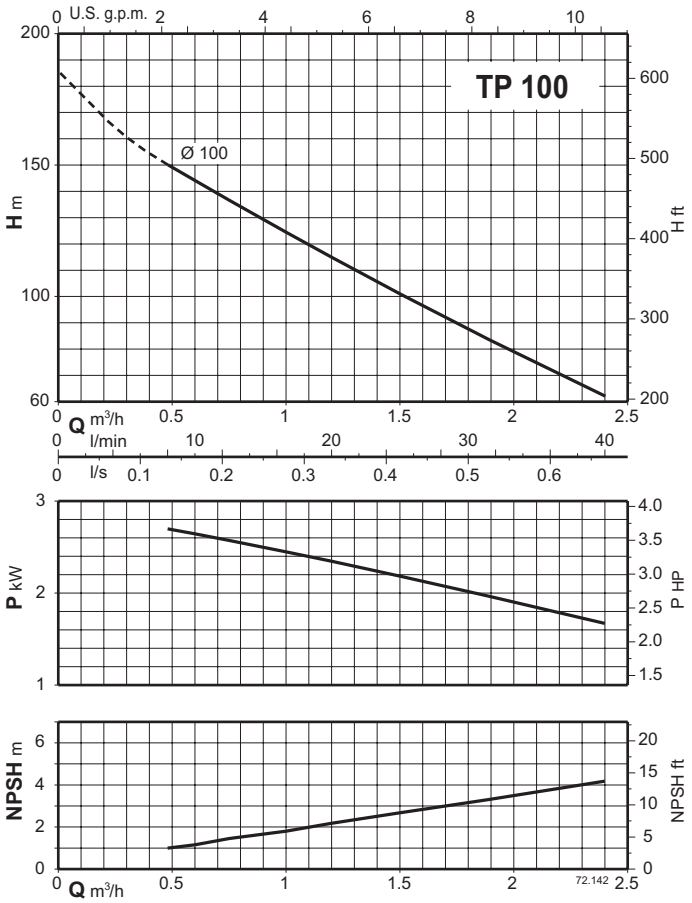
TP 100
Ø 100
U.S. g.p.m.
H m
H ft
Q m³/h
l/min
l/s
P kW
P HP
NPSH m
NPSH ft
72.142

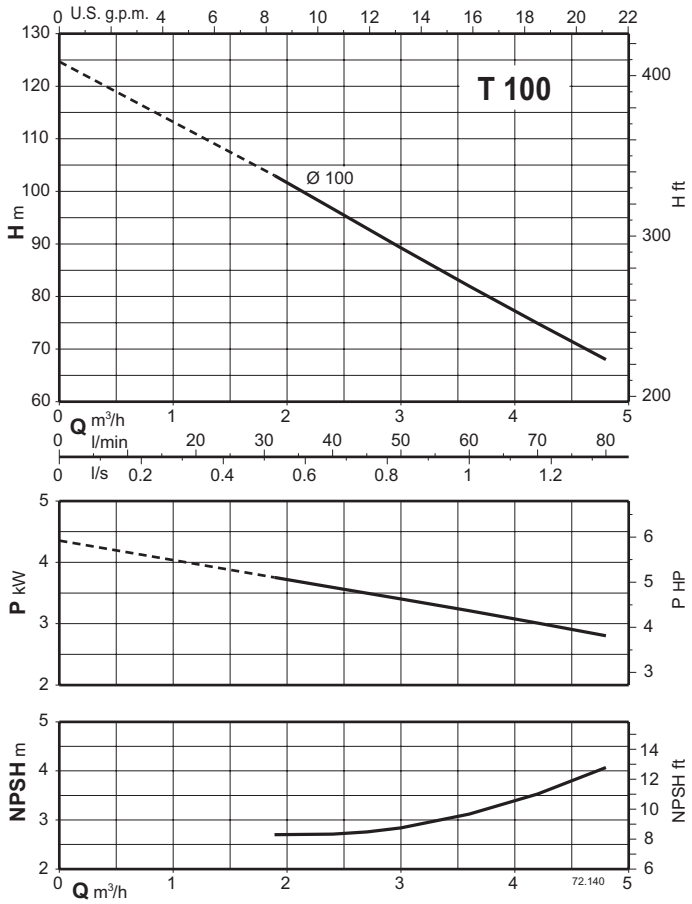
T 100
Ø 100
U.S. g.p.m.
H m
H ft
Q m³/h
l/min
l/s
P kW
P HP
NPSH m
NPSH ft
72.140

# T, TP

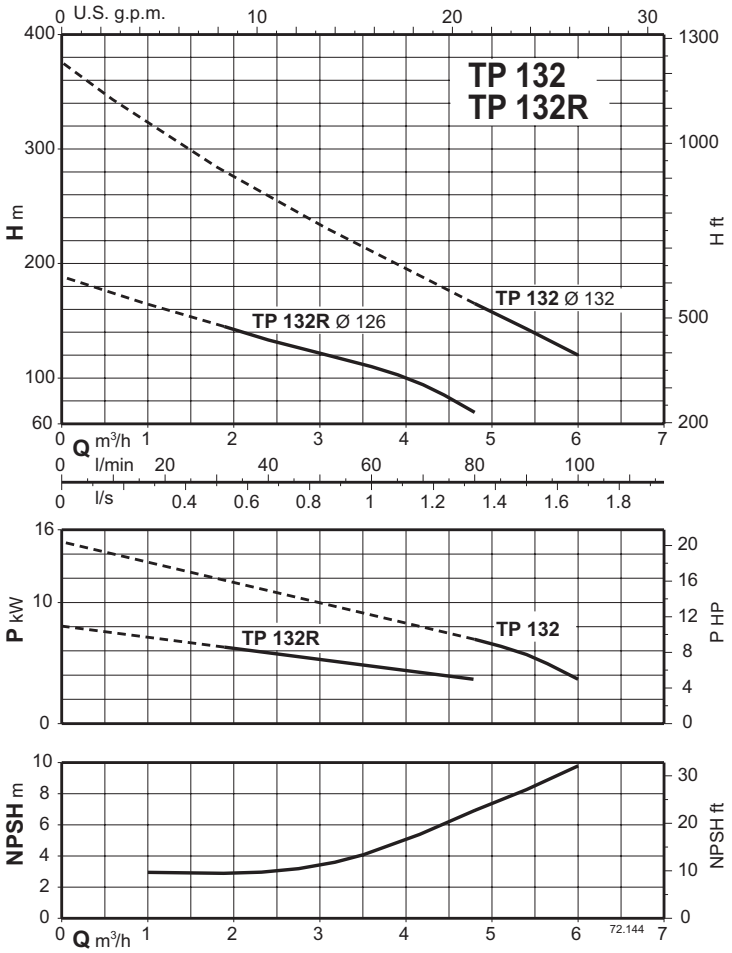
TP 132
TP 132R
TP 132 Ø 132
TP 132R Ø 126
H m
H ft
Q m³/h
U.S. g.p.m.
l/min
l/s
P kW
P HP
TP 132
TP 132R
NPSH m
NPSH ft
Q m³/h
72.144

# CA

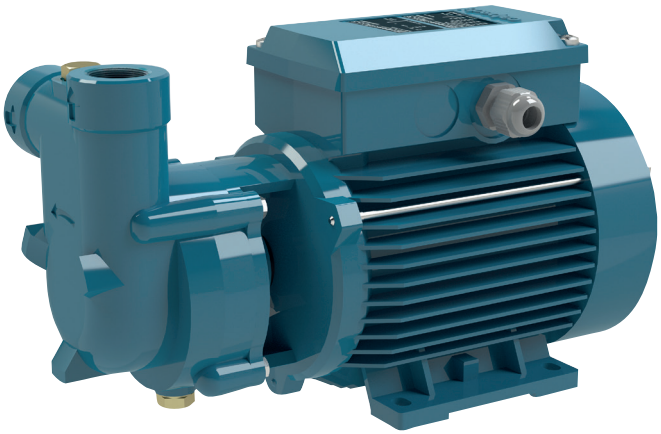

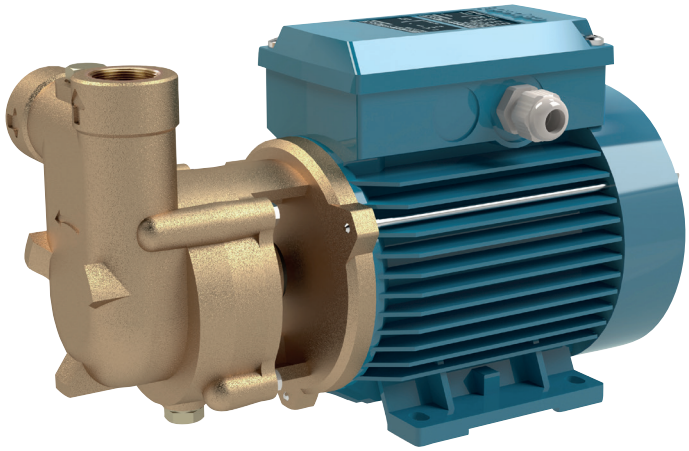

**Coverage chart n ≈ 2900 rpm**

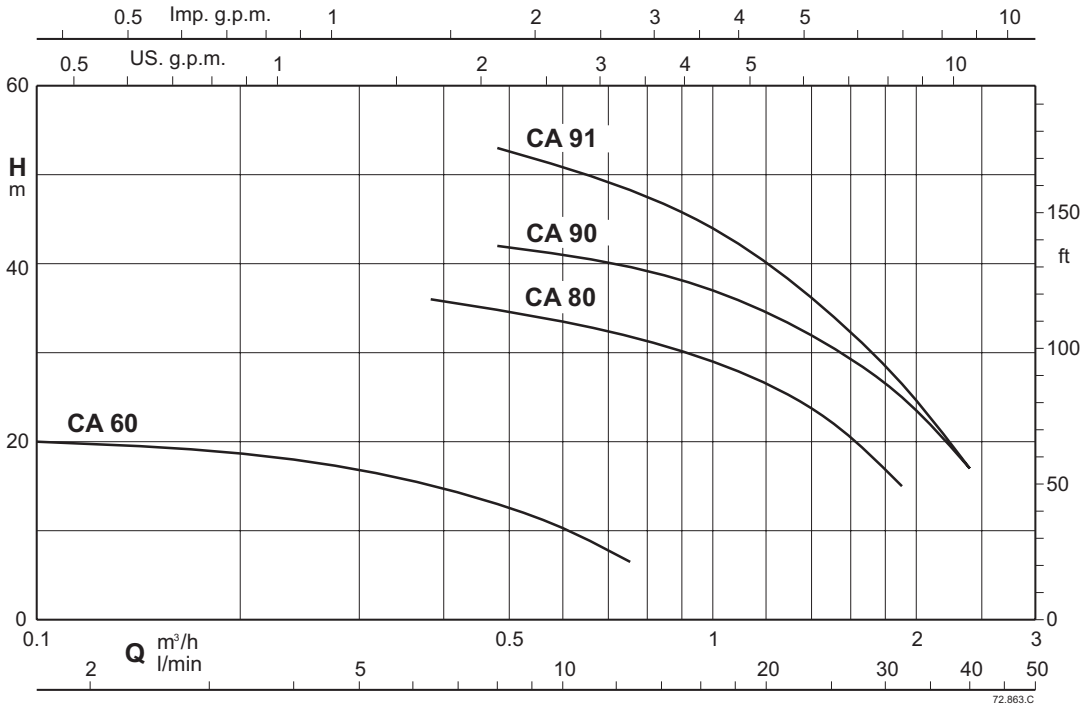


# Self-priming liquid ring pumps

# CA

## Construction

Liquid ring self-priming one-piece electric pumps with star-shaped impeller with anti-locking shim ring for CA 80, 90, 91.
**CA:** version with pump casing and lantern bracket in cast iron.
**BCA:** version with pump casing and lantern bracket in bronze.
The pumps are supplied fully painted.

## Applications

For clean liquids without abrasives, without suspended solids, non-explosive and non-aggressive for the pump materials.
If the liquid to be pumped has entrained air or gas or the flow in the suction pipe is not stable.
For drawing water out of a well.
For increasing network pressure (follow local specifications).

## Operating conditions

Liquid temperature from -10 °C to +90 °C.
Ambient temperature up to 40° C.
Suction lift up to 9m.
Maximum permissible pressure in the pump casing: 6 bar.
Continuous duty.

## Motor

2-pole induction motor, 50 Hz (n ≈ 2900 rpm).
**CA:** three-phase 230/400 V ± 10%.
**CAM:** single-phase 230 V ± 10%, with thermal protector.
Capacitor inside the terminal box.
Insulation class F.
Protection IP54
**IE2 efficiency class for single-phase motors.**
**IE3 efficiency class for three-phase motors (IE2 up to 0,65 kW).**
Constructed in accordance with EN 60034-1; EN 60034-30-1.
EN 60335-1, EN 60335-2-41.

## Special features on request

Other voltages.
Frequency 60 Hz (as per 60 Hz data sheet).
IP protection: IP55
Special mechanical seal
Higher or lower liquid or ambient temperatures.
Construction with bearing bracket.

## Designation

Example: BCAM 90/A
B = Bronze version (no indication: the pump is in the Cast Iron version)
CA = Series
M = Single-phase version (no indication: three-phase)
90 = Nominal impeller diameter
/A = It refers to a revision

## Materials

| Components | CA | BCA |
|---|---|---|
| Pump casing | Cast iron GJL 200 EN 1561 | Bronze CC480K EN 1982 |
| Lantern bracket | Cast iron GJL 200 EN 1561 | Bronze CC480K EN 1982 |
| Impeller | Brass CW617N EN 12167 | Brass CW617N EN 12167 |
| Shaft | Stainless Steel 1.4104 EN 10088 (AISI 430F) | Stainless Steel 1.4401 EN 10088 (AISI 316) |
| Mechanical seal | Carbon - Ceramic - NBR | Carbon - Ceramic - NBR |

# CA

calpeda®

## Coverage chart n ≈ 2900 rpm

### Three-phase

| | | | | | | Q = Flow | | | | | | | | | | | | |
|---|---|---|---|---|---|---|---|---|---|---|---|---|---|---|---|---|---|---|
| | | | | | | m³/h | 0 | 0,12 | 0,24 | 0,38 | 0,48 | 0,6 | 0,75 | 1 | 1,2 | 1,5 | 1,89 | 2,4 |
| Model | | 230V | 400V | P2 | | l/min | | 2 | 4 | 6,33 | 8 | 10 | 12,5 | 16,6 | 20 | 25 | 31,5 | 40 |
| | | A | | kW | HP | H (m) = Total head | | | | | | | | | | | | |
| BCA | CA 60E | 1,7 | 1 | 0,15 | 0,2 | | 21,2 | 20 | 18 | 15,5 | 13 | 10,5 | 6,5 | - | - | - | - | - |
| - | CA 80E | 2,8 | 1,6 | 0,45 | 0,6 | | 38 | - | - | 36 | 35 | 33,5 | 31,5 | 29 | 26 | 22 | 15 | - |
| - | BCA 80/A | 2,3 | 1,3 | 0,45 | 0,6 | | 38 | - | - | 36 | 35 | 33,5 | 31,5 | 29 | 26 | 22 | 15 | - |
| BCA | CA 90/A | 3 | 1,7 | 0,55 | 0,75 | | 47 | - | - | - | 42 | 41 | 40 | 37 | 34 | 30 | 25 | 17 |
| BCA | CA 91/B | 3,7 | 2,2 | 0,75 | 1 | | 60 | - | - | - | 53 | 51 | 48 | 44 | 39 | 34 | 26,5 | 17 |

### Single-phase

| | | | | | | Q = Flow | | | | | | | | | | | | |
|---|---|---|---|---|---|---|---|---|---|---|---|---|---|---|---|---|---|---|
| | | | | | | m³/h | 0 | 0,12 | 0,24 | 0,38 | 0,48 | 0,6 | 0,75 | 1 | 1,2 | 1,5 | 1,89 | 2,4 |
| Model | | 230V | P2 | | P1 | l/min | | 2 | 4 | 6,33 | 8 | 10 | 12,5 | 16,6 | 20 | 25 | 31,5 | 40 |
| | | A | kW | HP | kW | H (m) = Total head | | | | | | | | | | | | |
| BCAM | CAM 60E | 1,6 | 0,15 | 0,2 | 0,29 | | 21,2 | 20 | 18 | 15,5 | 13 | 10,5 | 6,5 | - | - | - | - | - |
| - | CAM 80E | 3,5 | 0,45 | 0,6 | 0,67 | | 38 | - | - | 36 | 35 | 33,5 | 31,5 | 29 | 26 | 22 | 15 | - |
| - | BCAM 80/A | 3,6 | 0,45 | 0,6 | 0,67 | | 38 | - | - | 36 | 35 | 33,5 | 31,5 | 29 | 26 | 22 | 15 | - |
| BCAM | CAM 90/A | 4,5 | 0,55 | 0,75 | 0,78 | | 47 | - | - | - | 42 | 41 | 40 | 37 | 34 | 30 | 25 | 17 |
| BCAM | CAM 91/A | 5,7 | 0,75 | 1 | 1,01 | | 60 | - | - | - | 53 | 51 | 48 | 44 | 39 | 34 | 26,5 | 17 |

**P1:** Maximum power input.
**P2:** Rated motor power output.
**H:** Total head in m
Head and power values valid for liquids with density ρ = 1,0 kg/dm3 and kinematic viscosity ν = max 20 mm2/sec. Total head in m

# CA

## Dimensions and weights

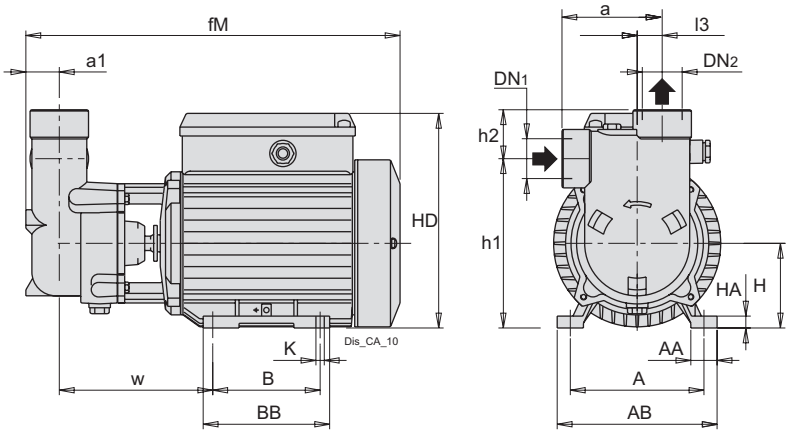


| TYPE | ISO 228 | | mm | | | | | | | | | | | | | | | | kg |
|---|---|---|---|---|---|---|---|---|---|---|---|---|---|---|---|---|---|---|---|
| | DN1 | DN2 | a | A | a1 | AA | AB | B | BB | fM | H | h1 | h2 | HA | HD | K | l5 | w | Weight |
| **CA 60E** | G 1/2 | G 1/2 | 59 | 100 | 18 | 22 | 122 | 80 | 96 | 256 | 63 | 103 | 25 | 8 | 158 | 7 | 14 | 103 | 5.8 |
| **CA 80E** | G 3/4 | G 3/4 | 72 | 100 | 23 | 22 | 122 | 80 | 96 | 272 | 63 | 126 | 27 | 8 | 158 | 7 | 17 | 109 | 7.5 |
| **CA 90/A** | G 1 | G 1 | 84 | 112 | 28 | 22 | 134 | 90 | 106 | 318 | 71 | 142 | 41 | 10 | 182 | 7 | 21 | 128 | 10 |
| **CA 91/B** | G 1 | G 1 | 84 | 112 | 28 | 22 | 134 | 90 | 106 | 318 | 71 | 142 | 41 | 10 | 182 | 7 | 21 | 128 | 12 |

| TYPE | ISO 228 | | mm | | | | | | | | | | | | | | | | kg |
|---|---|---|---|---|---|---|---|---|---|---|---|---|---|---|---|---|---|---|---|
| | DN1 | DN2 | a | A | a1 | AA | AB | B | BB | fM | H | h1 | h2 | HA | HD | K | l5 | w | Weight |
| **CAM 60E** | G 1/2 | G 1/2 | 59 | 100 | 18 | 22 | 122 | 80 | 96 | 256 | 63 | 103 | 25 | 8 | 158 | 7 | 14 | 103 | 5.9 |
| **CAM 80E** | G 3/4 | G 3/4 | 72 | 100 | 23 | 22 | 122 | 80 | 96 | 272 | 63 | 126 | 27 | 8 | 158 | 7 | 17 | 109 | 7.6 |
| **CAM 90/A** | G 1 | G 1 | 84 | 112 | 28 | 22 | 134 | 90 | 106 | 318 | 71 | 142 | 41 | 10 | 182 | 7 | 21 | 128 | 10.9 |
| **CAM 91/A** | G 1 | G 1 | 84 | 112 | 28 | 22 | 134 | 90 | 106 | 318 | 71 | 142 | 41 | 10 | 182 | 7 | 21 | 128 | 11.9 |

| TYPE | ISO 228 | | mm | | | | | | | | | | | | | | | | kg |
|---|---|---|---|---|---|---|---|---|---|---|---|---|---|---|---|---|---|---|---|
| | DN1 | DN2 | a | A | a1 | AA | AB | B | BB | fM | H | h1 | h2 | HA | HD | K | l5 | w | Weight |
| **BCA 60E** | G 1/2 | G 1/2 | 59 | 100 | 18 | 22 | 122 | 80 | 96 | 256 | 63 | 103 | 25 | 8 | 158 | 7 | 14 | 103 | 6.2 |
| **BCA 80/A** | G 3/4 | G 3/4 | 72 | 112 | 23 | 22 | 134 | 90 | 106 | 307 | 71 | 134 | 27 | 10 | 182 | 7 | 17 | 122 | 9 |
| **BCA 90/A** | G 1 | G 1 | 84 | 112 | 28 | 22 | 134 | 90 | 106 | 318 | 71 | 142 | 41 | 10 | 182 | 7 | 21 | 128 | 10.9 |
| **BCA 91/B** | G 1 | G 1 | 84 | 112 | 28 | 22 | 134 | 90 | 106 | 318 | 71 | 142 | 41 | 10 | 182 | 7 | 21 | 128 | 12.9 |

| TYPE | ISO 228 | | mm | | | | | | | | | | | | | | | | kg |
|---|---|---|---|---|---|---|---|---|---|---|---|---|---|---|---|---|---|---|---|
| | DN1 | DN2 | a | A | a1 | AA | AB | B | BB | fM | H | h1 | h2 | HA | HD | K | l5 | w | Weight |
| **BCAM 60E** | G 1/2 | G 1/2 | 59 | 100 | 18 | 22 | 122 | 80 | 96 | 256 | 63 | 103 | 25 | 8 | 158 | 7 | 14 | 103 | 6.3 |
| **BCAM 80/A** | G 3/4 | G 3/4 | 72 | 112 | 23 | 22 | 134 | 90 | 106 | 307 | 71 | 134 | 27 | 10 | 182 | 7 | 17 | 122 | 9.7 |
| **BCAM 90/A** | G 1 | G 1 | 84 | 112 | 28 | 22 | 134 | 90 | 106 | 318 | 71 | 142 | 41 | 10 | 182 | 7 | 21 | 128 | 11.8 |
| **BCAM 91/A** | G 1 | G 1 | 84 | 112 | 28 | 22 | 134 | 90 | 106 | 318 | 71 | 142 | 41 | 10 | 182 | 7 | 21 | 128 | 13 |

# CA

## Characteristic curves n ≈ 2900 rpm

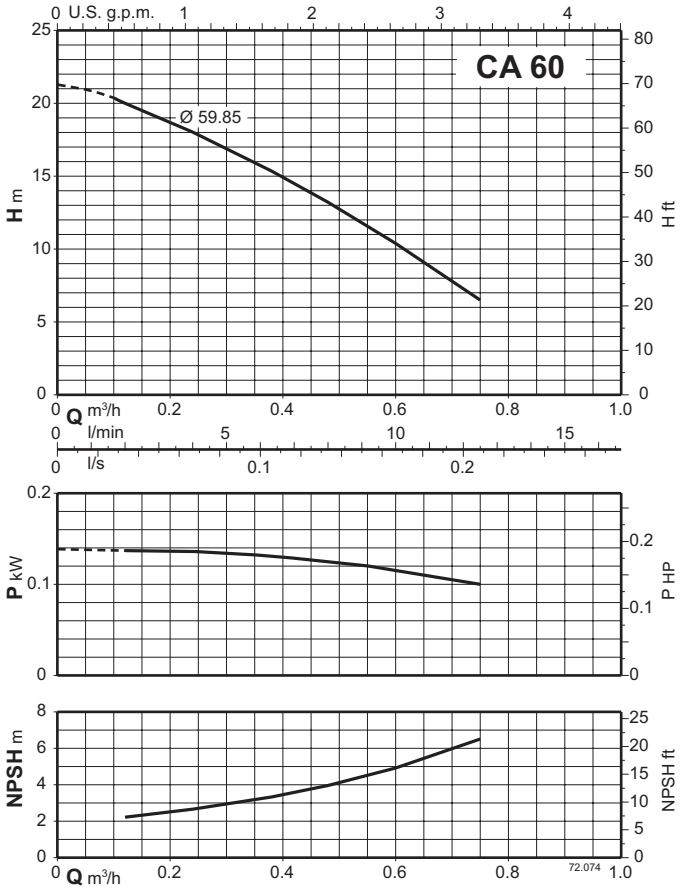


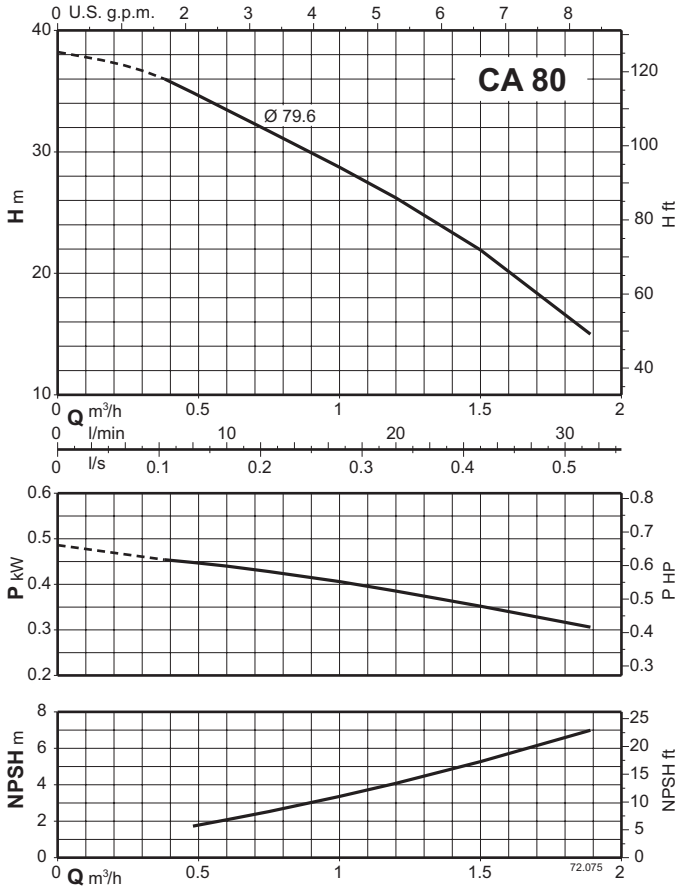


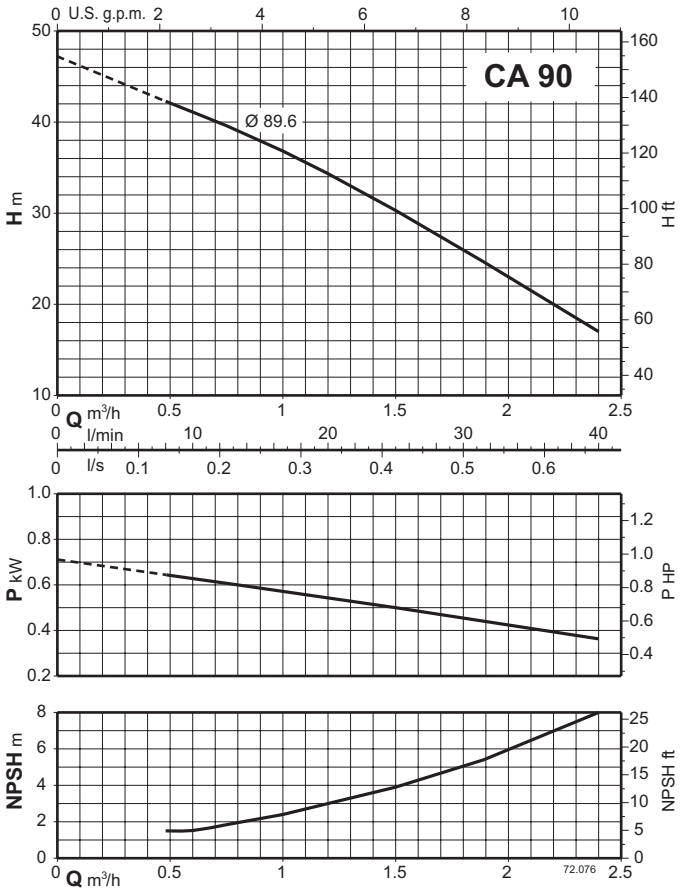


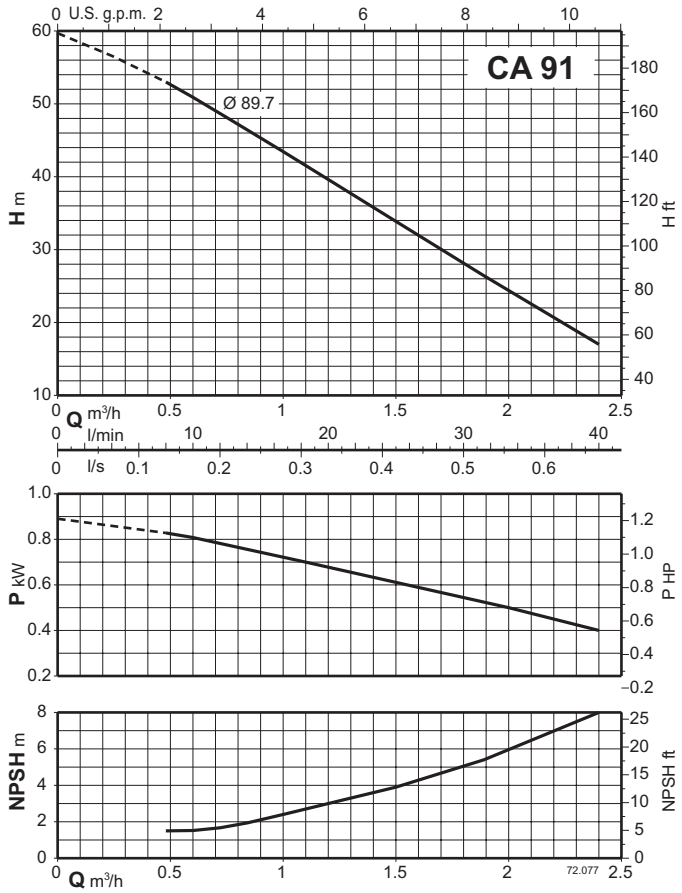

# NGL

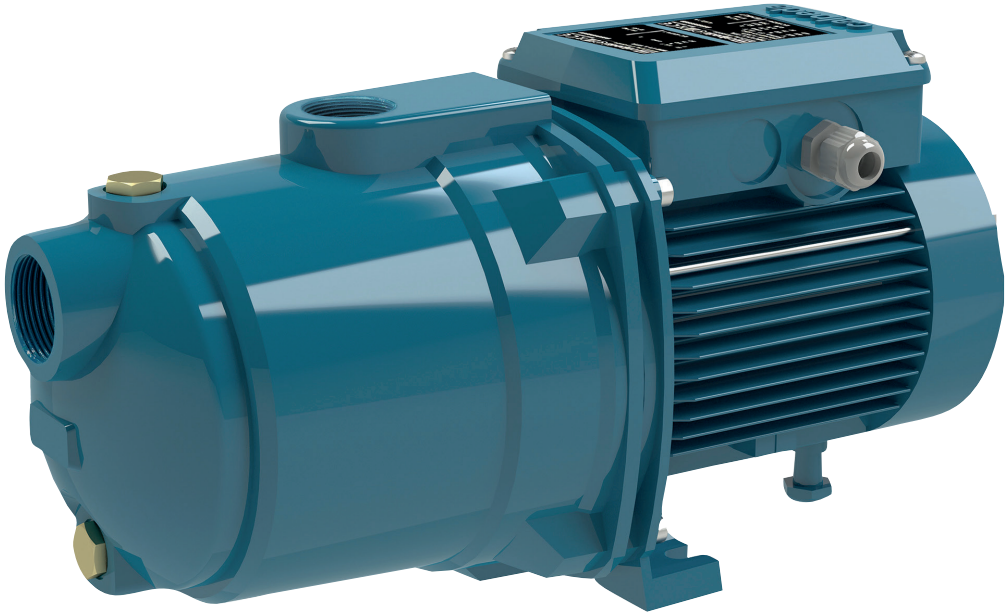

**Coverage chart n ≈ 2800 rpm**

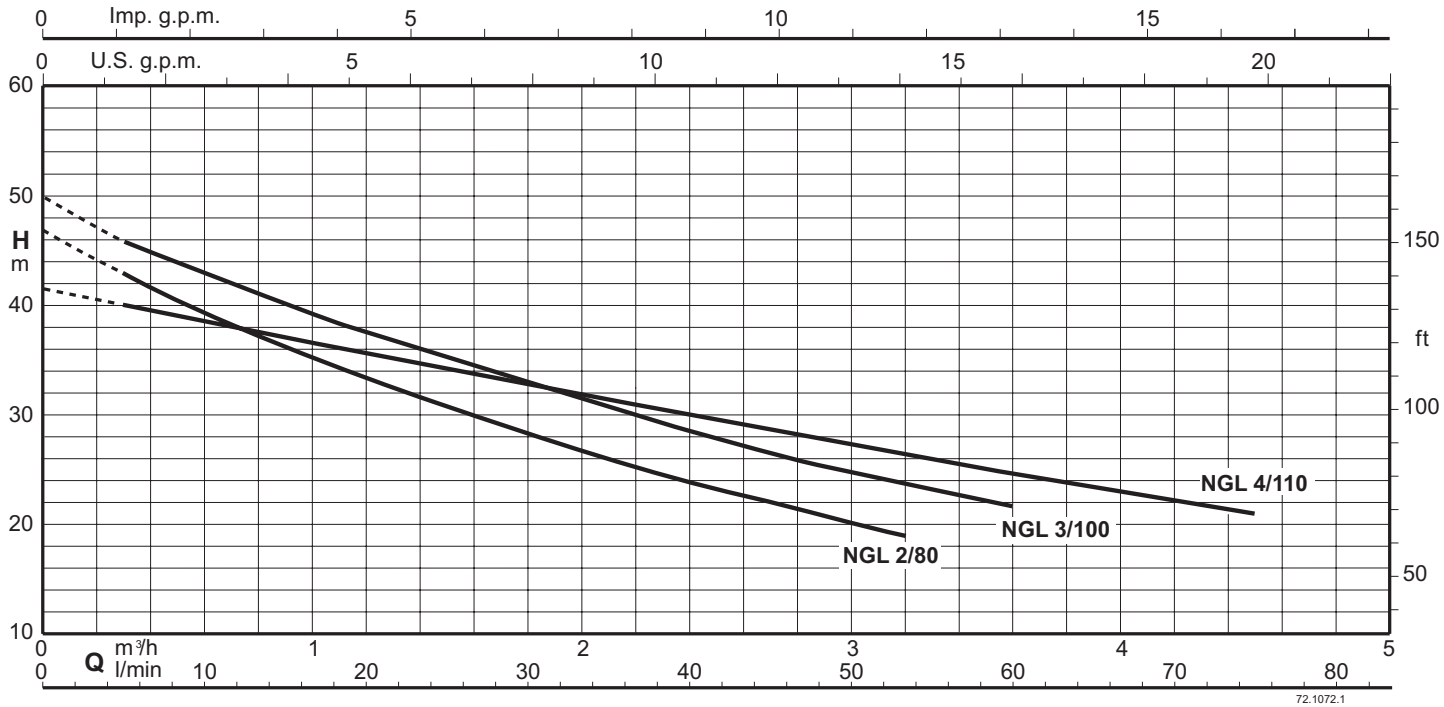


# Self-priming jet pumps

# NGL

calpeda®

## Construction

Close-coupled self-priming shallow-well pump with built-in ejector.

## Applications

For drawing water out of a well.
For lifting water containing air or other gases.
For increasing water pressure from flooded suction applications.
For increasing network pressure (follow local regulations).
For garden use.
For washing with a jet of water.

## Operating conditions

Liquid temperature: 0 °C to +35 °C.
Ambient temperature up to +40 °C.
Maximum permissible pressure in the pump casing: 8 bar.
Continuous duty.

## Motor

2-pole induction motor, 50 Hz (n ≈ 2800 1/min).
**NGL:** three-phase 230/400 V ± 10%.
**NGLM:** single-phase 230 V ± 10%, with thermal protector.
Capacitor inside the terminal box.
Insulation class F.
Protection IP54
**IE2 efficiency class for single-phase motors.**
**IE3 efficiency class for three-phase motors (IE2 up to 0,65 kW).**
Constructed in accordance with EN 60034-1.
EN 60335-1, EN 60335-2-41.

## Special features on request

Other voltages.
Frequency 60 Hz (as per 60 Hz data sheet).
Brass impeller.

## Designation

NGLM 2/80
NGL = Series
M = Single-phase version (no indication: three-phase)
2 = Progressive type number
80 = Nominal power P1

## Materials

| Components | Material |
|---|---|
| Pump casing | Cast iron GJL 200 EN 1561 |
| Casing cover | Chrome-nickel steel 1.4301 EN 10088 (AISI 304) |
| Impeller | Noryl PPO-GF20 |
| Wear ring impeller-diffuser | Chrome-nickel steel 1.4301 EN 10088 (AISI 304) |
| Diffuser | Noryl PPO-GF20 |
| Ejector | Noryl PPO-GF20 |
| Shaft | Steel 1.4104 EN 10088 (AISI 430F) |
| Mechanical seal | Carbon - Ceramic - NBR |

## Performance n ≈ 2800 rpm

### Three-phase

| | | | | | Q = Flow | | | | | | | | | | |
|---|---|---|---|---|---|---|---|---|---|---|---|---|---|---|---|
| | | | | | m³/h | 0 | 0,3 | 1 | 2 | 2,4 | 3 | 3.2 | 3,6 | 4 | 4,5 |
| Model | 230V | 400V | P2 | | l/min | | 5 | 16,6 | 33,3 | 40 | 50 | 53.3 | 60 | 66,6 | 75 |
| | A | | kW | HP | H (m) = Total head | | | | | | | | | | |
| NGL 2/80/A | 2,8 | 1,6 | 0,55 | 0,75 | | 46,8 | 43 | 35,2 | 26,7 | 23,9 | 20,2 | 19,1 | - | - | - |
| NGL 3/100 | 3 | 1,7 | 0,65 | 0,9 | | 50 | 45,9 | 39,4 | 31,3 | 28,5 | 24,8 | 23,7 | 21,7 | - | - |
| NGL 4/110 | 3,7 | 2,2 | 0,75 | 1 | | 41,6 | 40 | 36,6 | 31,9 | 30 | 27,3 | 26,4 | 24,6 | 23 | 21,1 |

### Single-phase

| | | | | | Q = Flow | | | | | | | | | | |
|---|---|---|---|---|---|---|---|---|---|---|---|---|---|---|---|
| | | | | | m³/h | 0 | 0,3 | 1 | 2 | 2,4 | 3 | 3.2 | 3,6 | 4 | 4,5 |
| Model | 230V | P2 | | P1 | l/min | | 5 | 16,6 | 33,3 | 40 | 50 | 53.3 | 60 | 66,6 | 75 |
| | A | kW | HP | kW | H (m) = Total head | | | | | | | | | | |
| NGLM 2/80/A | 4,5 | 0,55 | 0,75 | 0,78 | | 46,8 | 43 | 35,2 | 26,7 | 23,9 | 20,2 | 19,1 | - | - | - |
| NGLM 3/100 | 4,5 | 0,65 | 0,9 | 0,89 | | 50 | 45,9 | 39,4 | 31,3 | 28,5 | 24,8 | 23,7 | 21,7 | - | - |
| NGLM 4/110 | 5,7 | 0,75 | 1 | 1,01 | | 41,6 | 40 | 36,6 | 31,9 | 30 | 27,3 | 26,4 | 24,6 | 23 | 21,1 |

**P1:** Maximum power input.
**P2:** Rated motor power output.
Tolerances according to UNI EN ISO 9906:2012

# NGL

Characteristic curves for different suction lifts Hs

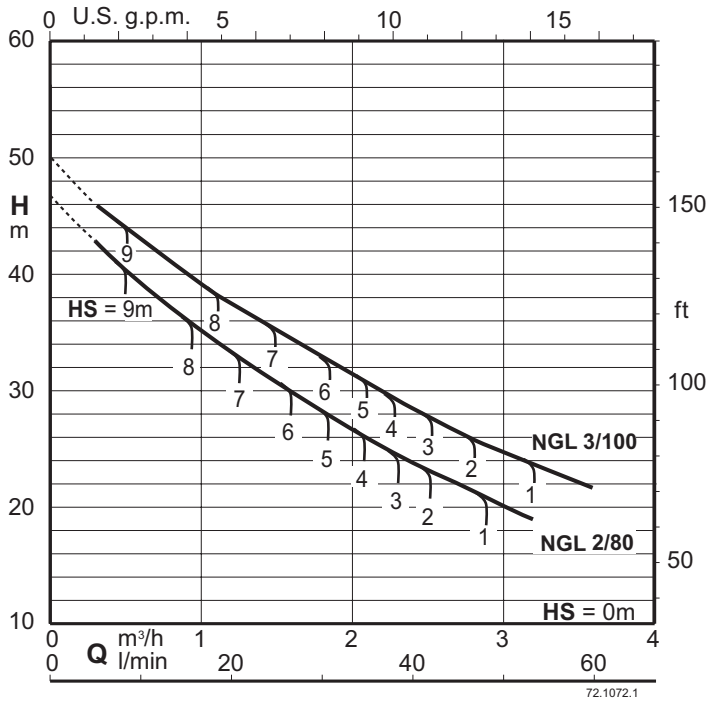


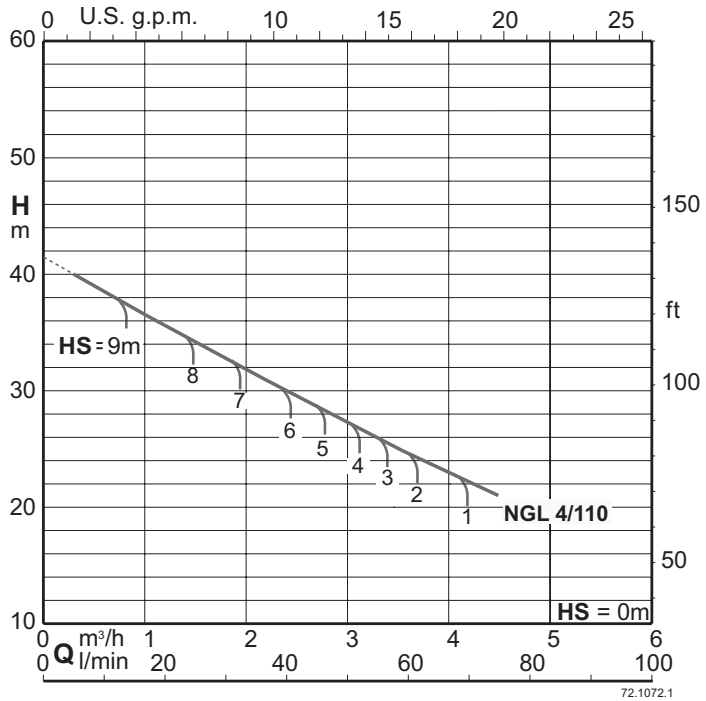


**Self-priming capability**
50 Hz (n ≈ 2800 1/min), H2O, T = 20°C, Pa = 1000 hPa (mbar)

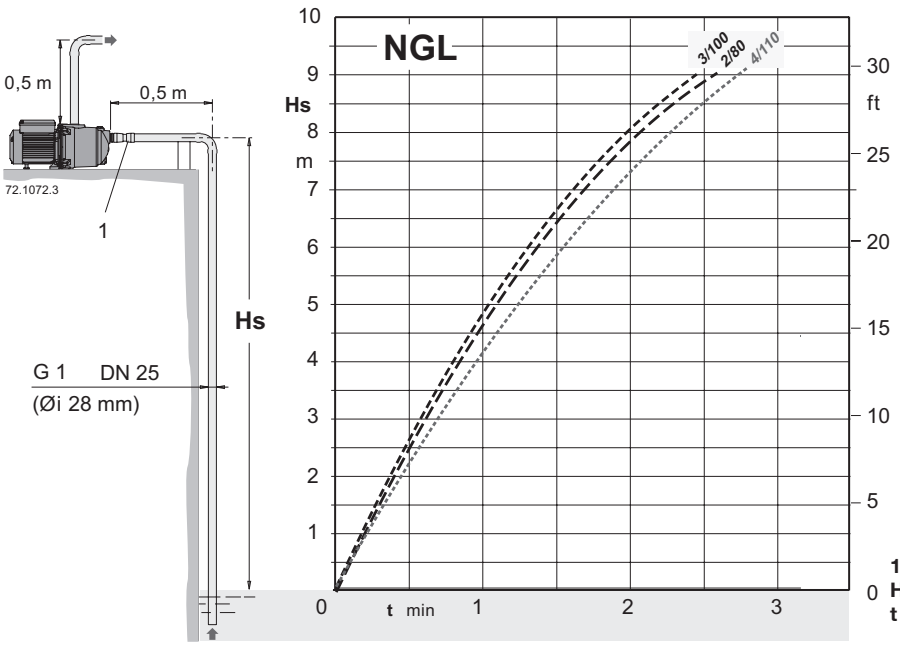


**1:** Non-return valve
**Hs (m)** Aspiration height
**t (min)** Self-priming time

# NGL

## Dimensions and weights

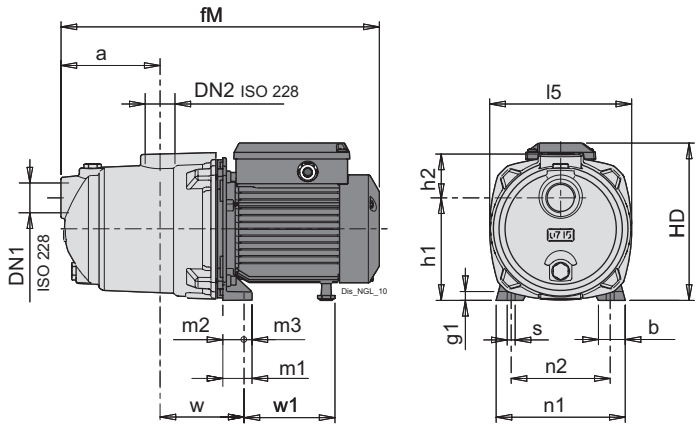


| TYPE | ISO 228 | | mm | | | | | | | | | | | | | | | | kg |
|---|---|---|---|---|---|---|---|---|---|---|---|---|---|---|---|---|---|---|---|
| | DN1 | DN2 | a | b | fM | g1 | h1 | h2 | HD | l5 | m1 | m2 | m3 | n1 | n2 | s | w | w1 | Weight |
| **NGL 2/80/A** | G 1 | G 1 | 113 | 30 | 388 | 10 | 116 | 61 | 193 | 161.00 | 33 | 25 | 8 | 146 | 113 | 9 | 95 | 119 | 11.2 |
| **NGL 3/100** | G 1 | G 1 | 113 | 30 | 388 | 10 | 116 | 61 | 193 | 161.00 | 33 | 25 | 8 | 146 | 113 | 9 | 95 | 119 | 11.1 |
| **NGL 4/110** | G 1 | G 1 | 113 | 30 | 388 | 10 | 116 | 61 | 193 | 161.00 | 33 | 25 | 8 | 146 | 113 | 9 | 95 | 119 | 13 |

| TYPE | ISO 228 | | mm | | | | | | | | | | | | | | | | kg |
|---|---|---|---|---|---|---|---|---|---|---|---|---|---|---|---|---|---|---|---|
| | DN1 | DN2 | a | b | fM | g1 | h1 | h2 | HD | l5 | m1 | m2 | m3 | n1 | n2 | s | w | w1 | Weight |
| **NGLM 2/80/A** | G 1 | G 1 | 113 | 30 | 388 | 10 | 116 | 61 | 193 | 161.00 | 33 | 25 | 8 | 146 | 113 | 9 | 95 | 119 | 12.2 |
| **NGLM 3/100** | G 1 | G 1 | 113 | 30 | 388 | 10 | 116 | 61 | 193 | 161.00 | 33 | 25 | 8 | 146 | 113 | 9 | 95 | 119 | 12.1 |
| **NGLM 4/110** | G 1 | G 1 | 113 | 30 | 388 | 10 | 116 | 61 | 193 | 161.00 | 33 | 25 | 8 | 146 | 113 | 9 | 95 | 119 | 13.1 |

# E-NGX

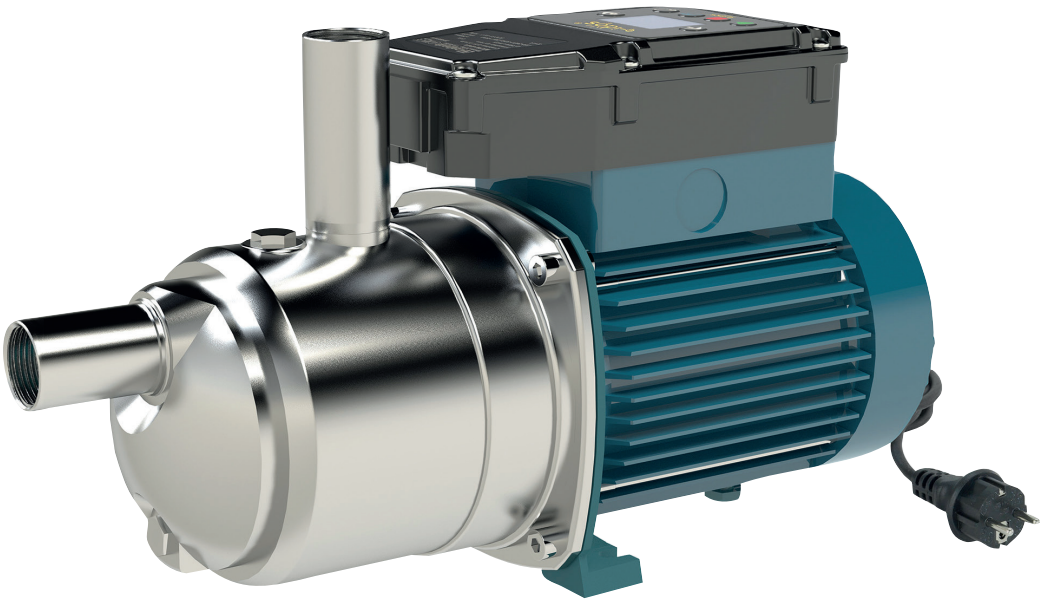

**Coverage chart n ≈ 2800 rpm**

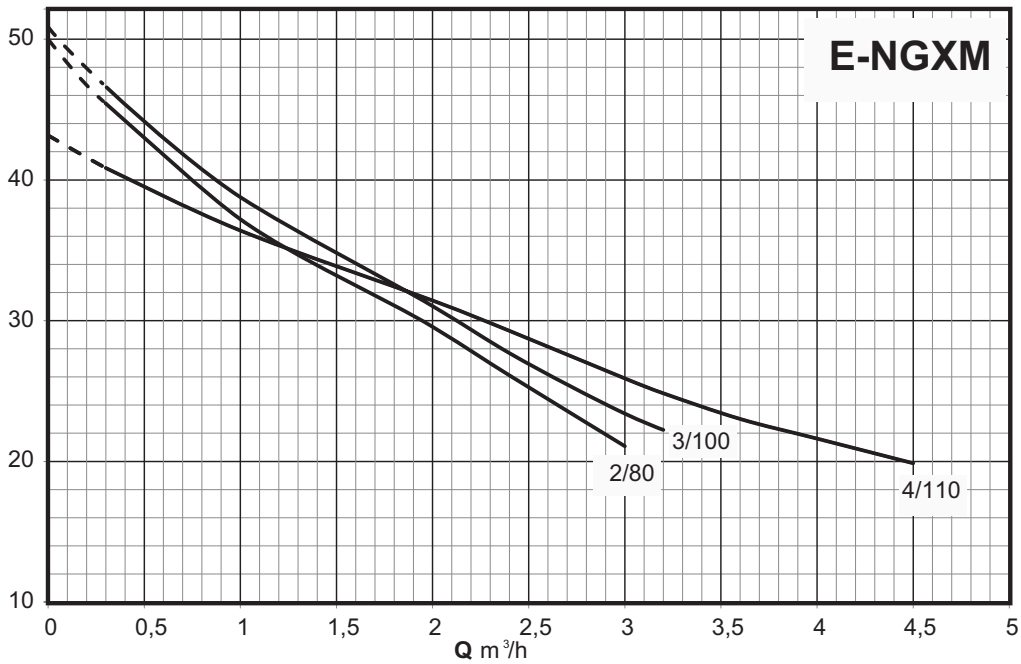


## Variable speed pressure with integrated control

# E-NGX

EASY TO INSTALL
Plug And play solution

ECONOMIC SAVING
High efficiency asynchronous motor 24 % less energy consumption compared to a standard pump

EASY TO USE
Equipped with programmable software and an analog pressure sensor, the product allows you to set the restart pressure. This is an ideal solution that reduces or eliminates the need for an expansion tank.

## Construction

Easy to install, compact and plug and play pressurized system with integrated pressure transducer for automatic control of starting/stopping of the pump when utilization points are opened/closed with a integrated non-return valve into the pump suction.
pumps:
E-NGX: version with self-priming pumps

## Applications

For water supply systems.
For domestic use, for garden use and irrigation.

## Features

high efficiency asynchronous motor
- capacitor less stressed in voltage
- uniform and lower motor temperature
- motor power control
- programmable re-start pressure
- programmable stop pressure
- no hydraulic losses due to the measuring devices
- voltage and current control
- monitoring of maximum starting current

## Protections

- dry-run protection
- overload control and overheating motor control
- pump blockage
- power supply control
- starts per hour control

## Operating conditions

Liquid temperature: 0 °C to +35 °C.
Ambient temperature up to 40° C.
Maximum permissible pressure in the pump casing: 8 bar.
Continuous duty.

## Motor

2-pole induction motor, 50 Hz (n ≈ 2900 rpm).
Single-phase 230 V ± 10%, with thermal protector.
Capacitor inside the terminal box.
H07RN-F cable, 3G1.5 mm2, length 1.5 m, with CEI-UNEL 47166 plug.
**IE2 efficiency class for single-phase motors.**
Insulation class F.
Protection IP X4.
Constructed in accordance with EN 60034-1, EN 60335-1, EN 60335-2-41.

## Designation

Example: E-NGXM 2/80-PCD
E = Electronic
NGX = Series
M = Single-phase version (no indication: three-phase)
2 = Progressive type number
80 = P1 nominal power input in kW
PCD = Constant Pressure Display

## Materials

| Components | Material |
|---|---|
| Pump casing | Chrome-nickel steel 1.4301 EN 10088 (AISI 304) |
| Casing cover | Chrome-nickel steel 1.4301 EN 10088 (AISI 304) |
| Pump shaft | Stainless Steel 1.4104 EN 10088 (AISI 430F) |
| Plug | Chrome-nickel steel 1.4305 EN 10088 (AISI 303) |
| Impeller | PPO-GF20 (Noryl) |
| Diffuser | PPO-GF20 (Noryl) |
| Ejector | PPO-GF20 (Noryl) |
| Mechanical seal | Carbon - Ceramic - NBR |

# E-NGX

## Performance n ≈ 2800 rpm

### Single-phase

| Model | 230V | P2 | | P1 | Q = Flow | | | | | | | | | | |
|---|---|---|---|---|---|---|---|---|---|---|---|---|---|---|---|
| | | | | | m³/h | 0 | 0,3 | 1 | 2 | 2,4 | 3 | 3.2 | 3,6 | 4 | 4,5 |
| | | | | | l/min | | 5 | 16,6 | 33,3 | 40 | 50 | 53.3 | 60 | 66,6 | 75 |
| | A | kW | HP | kW | H (m) = Total head | | | | | | | | | | |
| E-NGXM 2/80-PCD | 3,8 | 0,55 | 0,75 | 0,78 | | 50 | 45,5 | 37,2 | 29,6 | 26,1 | 21,1 | - | - | - | - |
| E-NGXM 3/100-PCD | 4,2 | 0,65 | 0,9 | 0,93 | | 50,9 | 46 | 38,8 | 31 | 27,4 | 23,2 | 22,2 | - | - | - |
| E-NGXM 4/110-PCD | 4,8 | 0,75 | 1 | 1,01 | | 43,2 | 40,8 | 36,4 | 31,4 | 29,3 | 25,9 | 24,8 | 23 | 21,6 | 19,9 |

**P1:** Maximum power input.
**P2:** Rated motor power output.
**H:** Total head in m

**Test results with clean cold water, without gas content.**
A safety margin of + 0.5 m is recommended for the NPSH value.
Tolerances according to UNI EN ISO 9906:2012

## Dimensions and weights

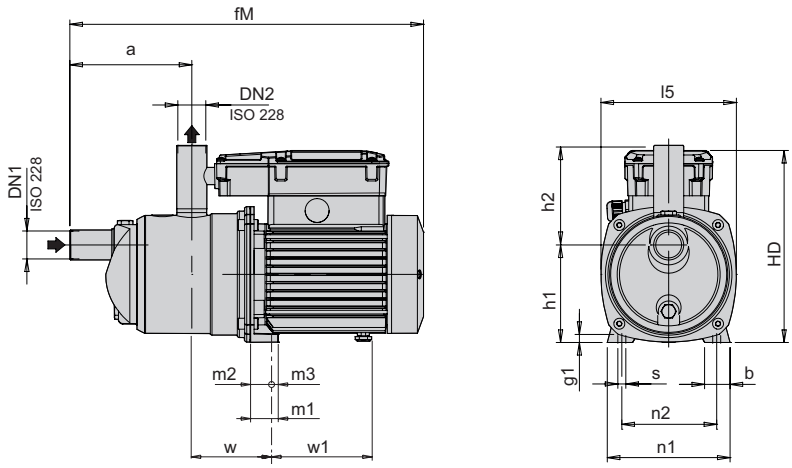


| TYPE | ISO 228 | | mm | | | | | | | | | | | | | | | kg |
|---|---|---|---|---|---|---|---|---|---|---|---|---|---|---|---|---|---|---|
| | DN1 | DN2 | a | b | fM | g1 | h1 | h2 | HD | l5 | m1 | m2 | m3 | n1 | n2 | s | w | Weight |
| **E-NGXM 2/80-PCD** | G 1 | G 1 | 145 | 30 | 420 | 10 | 116 | 119 | 228 | 161 | 33 | 25 | 8 | 146 | 112.5 | 9 | 95 | 10.1 |
| **E-NGXM 3/100-PCD** | G 1 | G 1 | 145 | 30 | 420 | 10 | 116 | 119 | 228 | 161 | 33 | 25 | 8 | 146 | 112.5 | 9 | 95 | 10.2 |
| **E-NGXM 4/110-PCD** | G 1 | G 1 | 145 | 30 | 420 | 10 | 116 | 119 | 228 | 161 | 33 | 25 | 8 | 146 | 112.5 | 9 | 95 | 11 |

# NGX

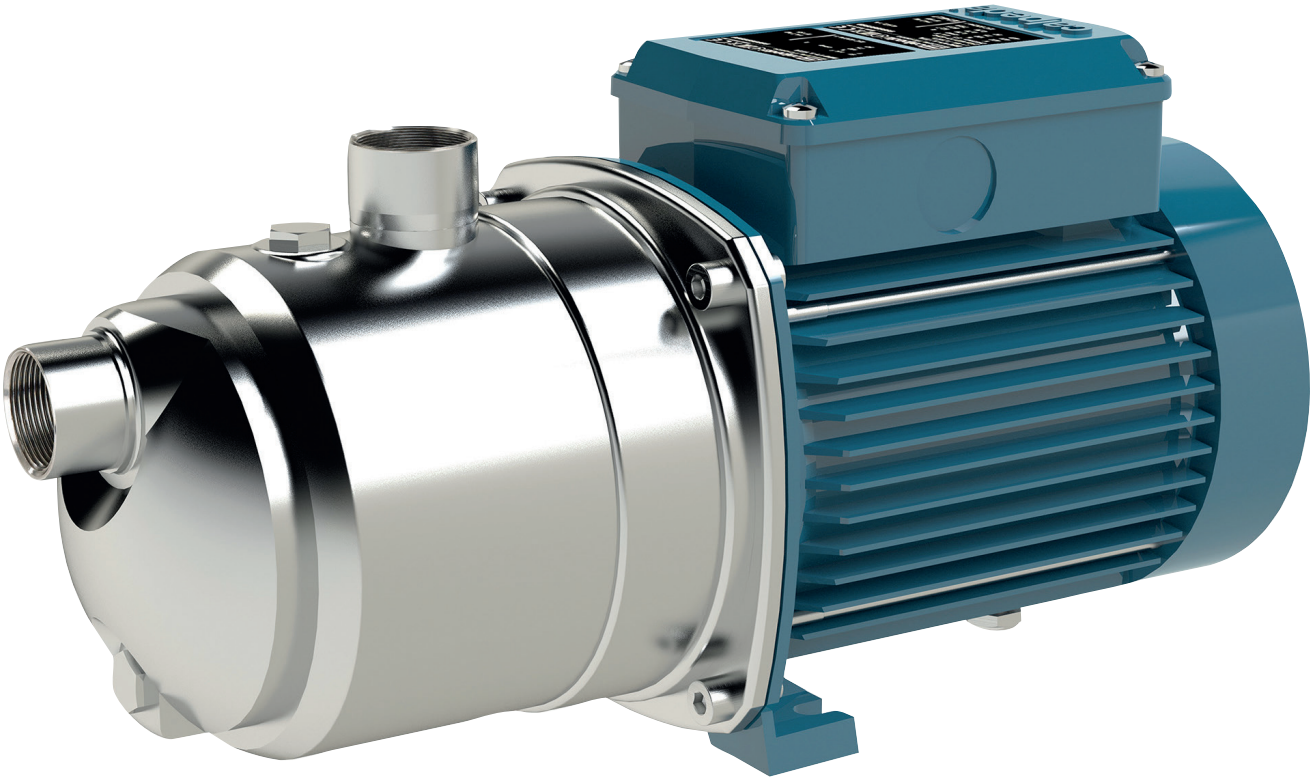

**Coverage chart n ≈ 2800 rpm**

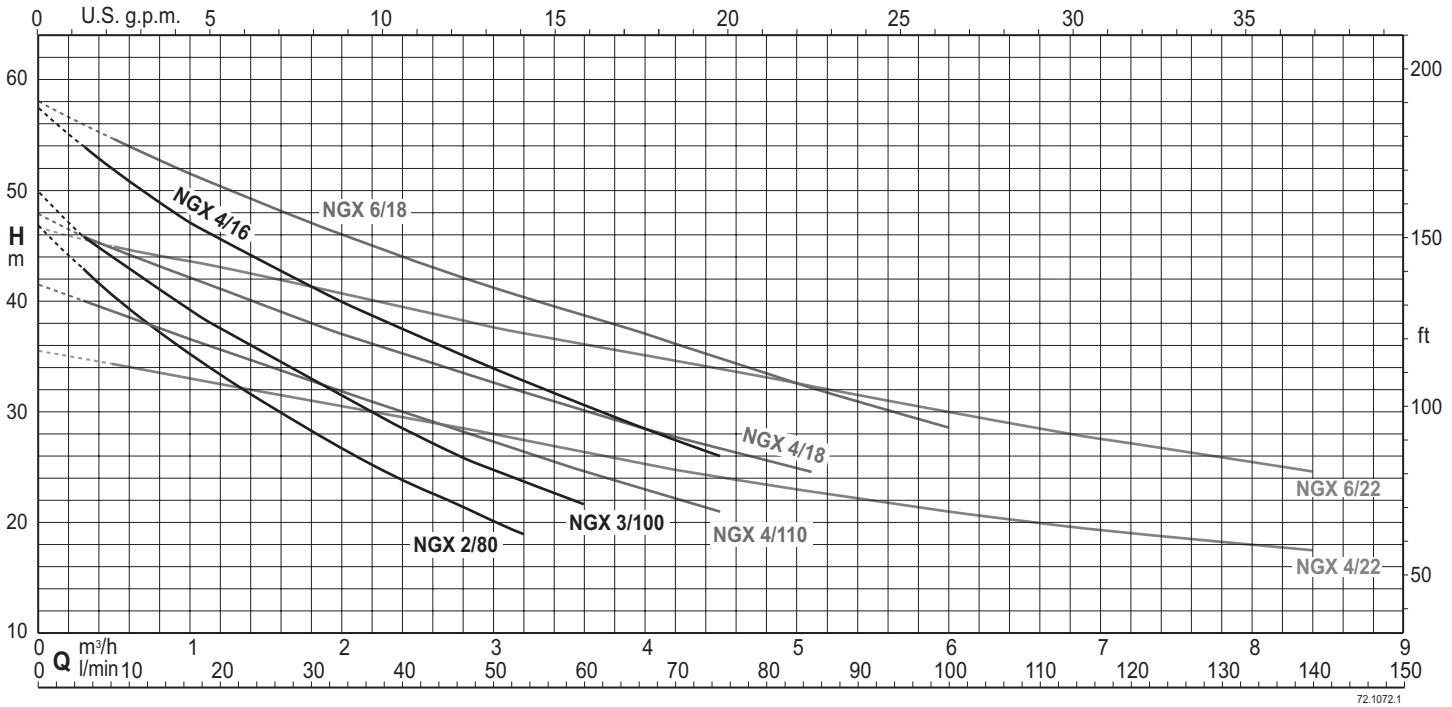


# Self-priming jet pumps

# NGX

## Construction

Close-coupled self-priming shallow well jet pumps with built-in ejector.
A high-quality pump for domestic water supply. Designed with environmental considerations, featuring a stainless steel casing.

## Applications

For drawing water out of a well.
For lifting water containing air or other gases.
For increasing network pressure (follow local specifications).
For increasing water pressure from flooded suction applications.
For garden use.
For washing with a jet of water.

## Operating conditions

Liquid temperature: 0 °C to +35 °C.
Ambient temperature up to 40° C.
Maximum permissible pressure in the pump casing: 8 bar.
Continuous duty (S3 60% for single-phase pump to 1,5 kW).

## Motor

2-pole induction motor, 50 Hz (n ≈ 2800 1/min).
**NGX:** three-phase 230/400 V ± 10%.
**NGXM:** single-phase **translation_not_found**
Capacitor inside the terminal box.
Insulation class F.
Protection IP54
**IE2 efficiency class for single-phase motors up to 1,1 kW.**
**IE3 efficiency class for three-phase motors (IE2 up to 0,65 kW).**
Constructed in accordance with EN 60034-1; EN 60034-30-1.
EN 60335-1, EN 60335-2-41.

## Special features on request

Other voltages.
Frequency 60 Hz (as per 60 Hz data sheet).
Brass impeller

## Designation

NGXM 6/18/A
NGX = Series
M = Single-phase version (no indication: three-phase)
6 = Progressive type number
18 · = Ejector type
/A = It refers to a revision

## Materials

| Component | Material |
|---|---|
| Pump casing | Chrome-nickel steel 1.4301 EN 10088 (AISI 304) |
| Casing cover | Chrome-nickel steel 1.4301 EN 10088 (AISI 304) |
| Impeller | Brass CW617N EN 12165 (Noryl PPO-GF20 for NGX 2/80, 3/100, 4/110) |
| Wear ring impeller-diffuser | Chrome-nickel steel 1.4301 EN 10088 (AISI 304) |
| Diffuser | Noryl PPO-GF20 |
| Ejector | Noryl PPO-GF20 |
| Shaft | Steel 1.4104 EN 10088 (AISI 430F) |
| | Steel 1.4305 EN 10088 (AISI 303). NGX 6 |
| Mechanical seal | Carbon - Ceramic - NBR |

# NGX

calpeda®

## Performance n ≈ 2800 rpm

### Single-phase

| | | | | | Q = Flow | | | | | | | | | | | | | | | | | | |
|---|---|---|---|---|---|---|---|---|---|---|---|---|---|---|---|---|---|---|---|---|---|---|---|
| | | | | | m³/h | 0 | 0,3 | 0,5 | 1 | 2 | 2,4 | 3 | 3.2 | 3,6 | 4 | 4,5 | 5 | 5,5 | 6 | 6,5 | 7 | 8 | 8,4 |
| Model | 230V | P2 | | P1 | l/min | | 5 | 8,33 | 16,6 | 33,3 | 40 | 50 | 53.3 | 60 | 66,6 | 75 | 83,3 | 91,6 | 100 | 108 | 117 | 133 | 140 |
| | A | kW | HP | kW | H (m) = Total head | | | | | | | | | | | | | | | | | | |
| NGXM 2/80/A | 4,5 | 0,55 | 0,75 | 0,78 | | 46,8 | 43 | 40,7 | 35,2 | 26,7 | 23,9 | 20,2 | 19,1 | - | - | - | - | - | - | - | - | - | - |
| NGXM 3/100 | 4,5 | 0,65 | 0,9 | 0,89 | | 50 | 45,9 | 44 | 39,4 | 31,3 | 28,5 | 24,8 | 23,7 | 21,7 | - | - | - | - | - | - | - | - | - |
| NGXM 4/110 | 5,7 | 0,75 | 1 | 1,01 | | 41,6 | 40 | 39 | 36,6 | 31,9 | 30 | 27,3 | 26,4 | 24,6 | 23 | 21,1 | - | - | - | - | - | - | - |
| NGXM 4/16 | 7 | 1,1 | 1,5 | 1,44 | | 57,5 | 54 | 52 | 47,3 | 40 | 37,5 | 34 | 32,9 | 30,7 | 28,5 | 26 | - | - | - | - | - | - | - |
| NGXM 4/18 | 7 | 1,1 | 1,5 | 1,44 | | 48 | 46 | 45 | 42,5 | 37 | 35 | 32,5 | 31,7 | 30,1 | 28,5 | 27 | 25 | - | - | - | - | - | - |
| NGXM 4/22 | 7 | 1,1 | 1,5 | 1,44 | | 35,5 | 34,8 | 34,3 | 33 | 30,5 | 29,5 | 28 | 27,5 | 26,4 | 25,3 | 24 | 23 | 22 | 21 | 20,3 | 19,5 | 18 | 17,5 |
| NGXM 6/18 | 9,2 | 1,5 | 2 | 2 | | 58 | - | 54,7 | 51,5 | 46 | 44 | 41,3 | 40,4 | 38,7 | 37 | 34,7 | 32,5 | 30,5 | 28,5 | - | - | - | - |
| NGXM 6/22 | 9,2 | 1,5 | 2 | 2 | | 46,5 | - | 45 | 43,5 | 40,5 | 39,3 | 37,5 | 37 | 36 | 35 | 33,5 | 32,5 | 31,2 | 30 | 28,5 | 27,5 | 25,5 | 24,5 |

### Three-phase

| | | | | | Q = Flow | | | | | | | | | | | | | | | | | | |
|---|---|---|---|---|---|---|---|---|---|---|---|---|---|---|---|---|---|---|---|---|---|---|---|
| | | | | | m³/h | 0 | 0,3 | 0,5 | 1 | 2 | 2,4 | 3 | 3.2 | 3,6 | 4 | 4,5 | 5 | 5,5 | 6 | 6,5 | 7 | 8 | 8,4 |
| Model | 230V | 400V | P2 | | l/min | | 5 | 8,33 | 16,6 | 33,3 | 40 | 50 | 53.3 | 60 | 66,6 | 75 | 83,3 | 91,6 | 100 | 108 | 117 | 133 | 140 |
| | A | | kW | HP | H (m) = Total head | | | | | | | | | | | | | | | | | | |
| NGX 2/80/A | 2,8 | 1,6 | 0,55 | 0,75 | | 46,8 | 43 | 40,7 | 35,2 | 26,7 | 23,9 | 20,2 | 19,1 | - | - | - | - | - | - | - | - | - | - |
| NGX 3/100 | 3 | 1,7 | 0,65 | 0,9 | | 50 | 45,9 | 44 | 39,4 | 31,3 | 28,5 | 24,8 | 23,7 | 21,7 | - | - | - | - | - | - | - | - | - |
| NGX 4/110 | 3,7 | 2,2 | 0,75 | 1 | | 41,6 | 40 | 39 | 36,6 | 31,9 | 30 | 27,3 | 26,4 | 24,6 | 23 | 21,1 | - | - | - | - | - | - | - |
| NGX 4/16 | 4,5 | 2,6 | 1,1 | 1,5 | | 57,5 | 54 | 52 | 47,3 | 40 | 37,5 | 34 | 32,9 | 30,7 | 28,5 | 26 | - | - | - | - | - | - | - |
| NGX 4/18 | 4,5 | 2,6 | 1,1 | 1,5 | | 48 | 46 | 45 | 42,5 | 37 | 35 | 32,5 | 31,7 | 30,1 | 28,5 | 27 | 25 | - | - | - | - | - | - |
| NGX 4/22 | 4,5 | 2,6 | 1,1 | 1,5 | | 35,5 | 34,8 | 34,3 | 33 | 30,5 | 29,5 | 28 | 27,5 | 26,4 | 25,3 | 24 | 23 | 22 | 21 | 20,3 | 19,5 | 18 | 17,5 |
| NGX 6/18/A | 7,5 | 4,3 | 1,5 | 2 | | 58 | - | 54,7 | 51,5 | 46 | 44 | 41,3 | 40,4 | 38,7 | 37 | 34,7 | 32,5 | 30,5 | 28,5 | - | - | - | - |
| NGX 6/22/A | 7,5 | 4,3 | 1,5 | 2 | | 46,5 | - | 45 | 43,5 | 40,5 | 39,3 | 37,5 | 37 | 36 | 35 | 33,5 | 32,5 | 31,2 | 30 | 28,5 | 27,5 | 25,5 | 24,5 |

**P1:** Maximum power input.
**P2:** Rated motor power output.
**Hs (m)** Aspiration height
Tolerances according to UNI EN ISO 9906:2012

# NGX

Curve caratteristiche con diverse altezze di aspirazi

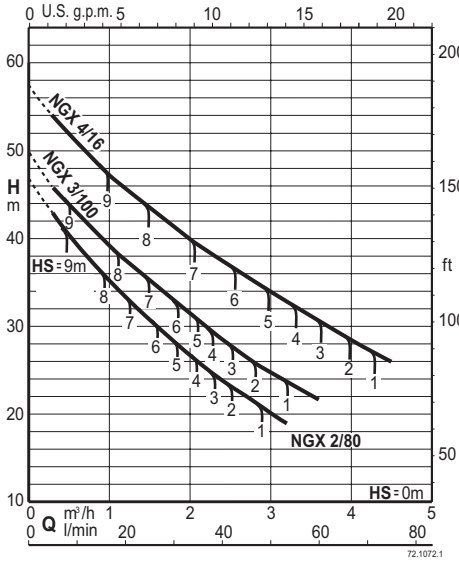


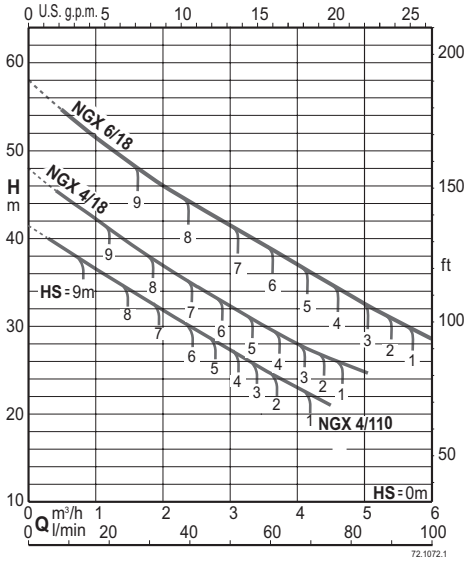


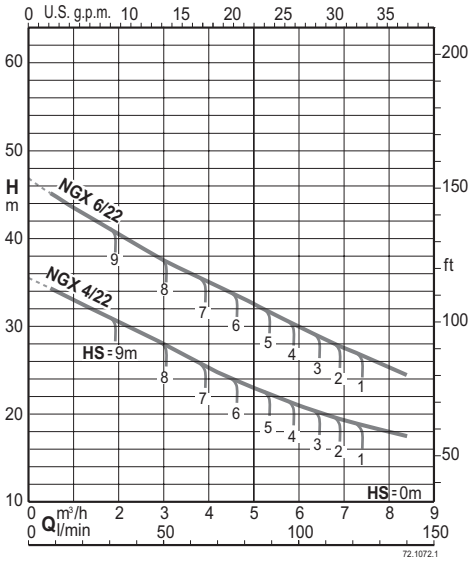


Self-priming capability
50 Hz (n ≈ 2800 1/min), H2O, T = 20°C, Pa = 1000 hPa (mbar)

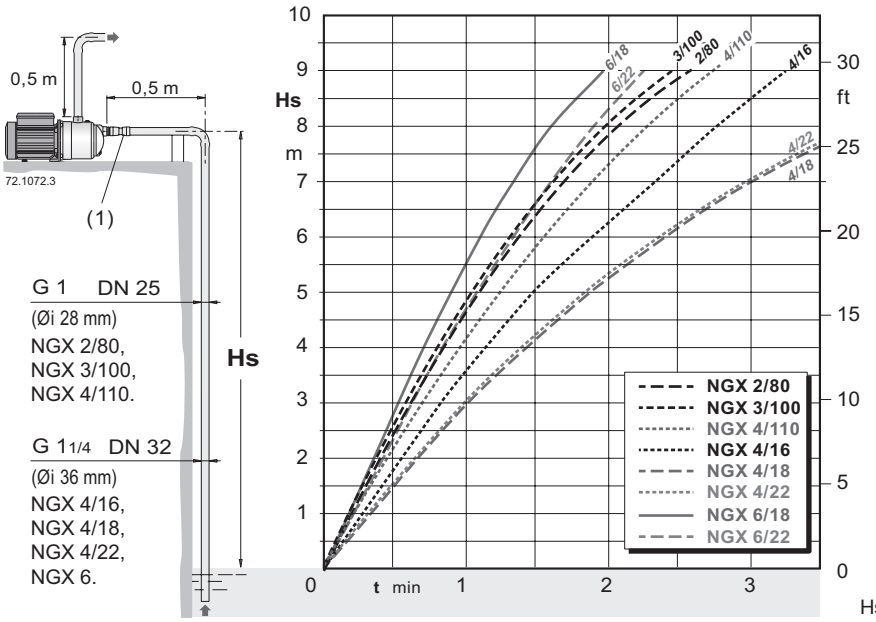


Hs (m): Aspiration height
t (min): Self-priming time
(1) Non-return valve

# NGX

calpeda®

## Dimensions and weights

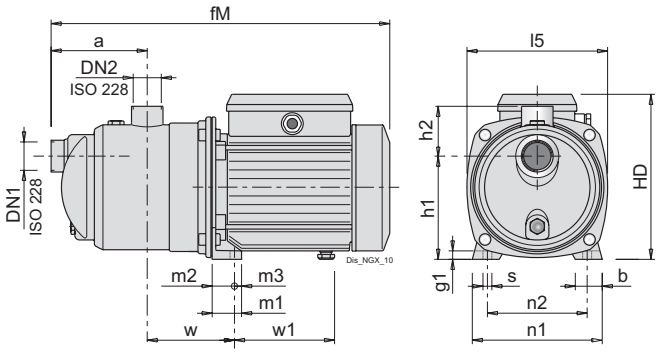


| TYPE | ISO 228 | | mm | | | | | | | | | | | | | | | | kg |
|---|---|---|---|---|---|---|---|---|---|---|---|---|---|---|---|---|---|---|---|
| | DN1 | DN2 | a | b | fM | g1 | h1 | h2 | HD | l5 | m1 | m2 | m3 | n1 | n2 | s | w | w1 | Weight |
| **NGXM 2/80/A** | G 1 | G 1 | 115 | 30 | 391 | 10 | 116 | 61 | 192 | 161.00 | 33 | 25 | 8 | 146 | 112 | 9 | 95 | 112 | 9.3 |
| **NGXM 3/100** | G 1 | G 1 | 115 | 30 | 391 | 10 | 116 | 61 | 192 | 161.00 | 33 | 25 | 8 | 146 | 112 | 9 | 95 | 112 | 9.3 |
| **NGXM 4/110** | G 1 | G 1 | 115 | 30 | 391 | 10 | 116 | 61 | 192 | 161.00 | 33 | 25 | 8 | 146 | 112 | 9 | 95 | 112 | 10.2 |
| **NGXM 4/16** | G 1 1/4 | G 1 | 140 | 33 | 462 | 11 | 152 | 68 | 225 | 213.5 | 37.5 | 28 | 9.5 | 185 | 155 | 9.5 | 113 | 147 | 14.4 |
| **NGXM 4/18** | G 1 1/4 | G 1 | 140 | 33 | 488.5 | 11 | 152 | 68 | 225 | 213.5 | 37.5 | 28 | 9.5 | 185 | 155 | 9.5 | 113 | 147 | 15 |
| **NGXM 4/22** | G 1 1/4 | G 1 | 140 | 33 | 488.5 | 11 | 152 | 68 | 225 | 213.5 | 37.5 | 28 | 9.5 | 185 | 155 | 9.5 | 113 | 147 | 14.7 |
| **NGXM 6/18** | G 1 1/4 | G 1 | 140 | 33 | 488.5 | 11 | 152 | 68 | 240 | 213.5 | 37.5 | 28 | 9.5 | 185 | 155 | 9.5 | 113 | 157.5 | 17.4 |
| **NGXM 6/22** | G 1 1/4 | G 1 | 140 | 33 | 488.5 | 11 | 152 | 68 | 240 | 213.5 | 37.5 | 28 | 9.5 | 185 | 155 | 9.5 | 113 | 157.5 | 17.4 |

| TYPE | ISO 228 | | mm | | | | | | | | | | | | | | | | kg |
|---|---|---|---|---|---|---|---|---|---|---|---|---|---|---|---|---|---|---|---|
| | DN1 | DN2 | a | b | fM | g1 | h1 | h2 | HD | l5 | m1 | m2 | m3 | n1 | n2 | s | w | w1 | Weight |
| **NGX 2/80/A** | G 1 | G 1 | 115 | 30 | 391 | 10 | 116 | 61 | 192 | 161.00 | 33 | 25 | 8 | 146 | 112 | 9 | 95 | 112 | 8.4 |
| **NGX 3/100** | G 1 | G 1 | 115 | 30 | 391 | 10 | 116 | 61 | 192 | 161.00 | 33 | 25 | 8 | 146 | 112 | 9 | 95 | 112 | 8.3 |
| **NGX 4/110** | G 1 | G 1 | 115 | 30 | 391 | 10 | 116 | 61 | 192 | 161.00 | 33 | 25 | 8 | 146 | 112 | 9 | 95 | 112 | 10.9 |
| **NGX 4/16** | G 1 1/4 | G 1 | 140 | 33 | 462 | 11 | 152 | 68 | 225 | 213.5 | 37.5 | 28 | 9.5 | 185 | 155 | 9.5 | 113 | 147 | 14.8 |
| **NGX 4/18** | G 1 1/4 | G 1 | 140 | 33 | 488.5 | 11 | 152 | 68 | 225 | 213.5 | 37.5 | 28 | 9.5 | 185 | 155 | 9.5 | 113 | 147 | 14.8 |
| **NGX 4/22** | G 1 1/4 | G 1 | 140 | 33 | 488.5 | 11 | 152 | 68 | 225 | 213.5 | 37.5 | 28 | 9.5 | 185 | 155 | 9.5 | 113 | 147 | 14.8 |
| **NGX 6/18/A** | G 1 1/4 | G 1 | 140 | 33 | 488.5 | 11 | 152 | 68 | 240 | 213.5 | 37.5 | 28 | 9.5 | 185 | 155 | 9.5 | 113 | 157.5 | 18.1 |
| **NGX 6/22/A** | G 1 1/4 | G 1 | 140 | 33 | 488.5 | 11 | 152 | 68 | 240 | 213.5 | 37.5 | 28 | 9.5 | 185 | 155 | 9.5 | 113 | 157.5 | 17.3 |

# NG

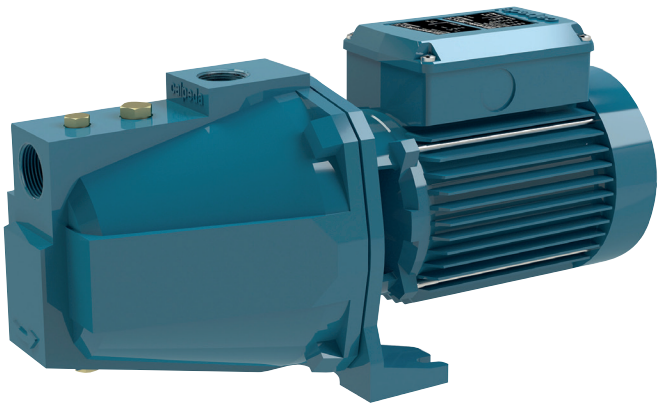

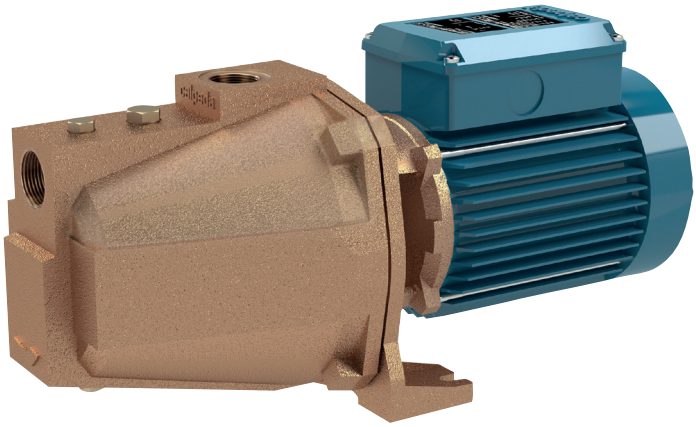

**Coverage chart n ≈ 2900 rpm**

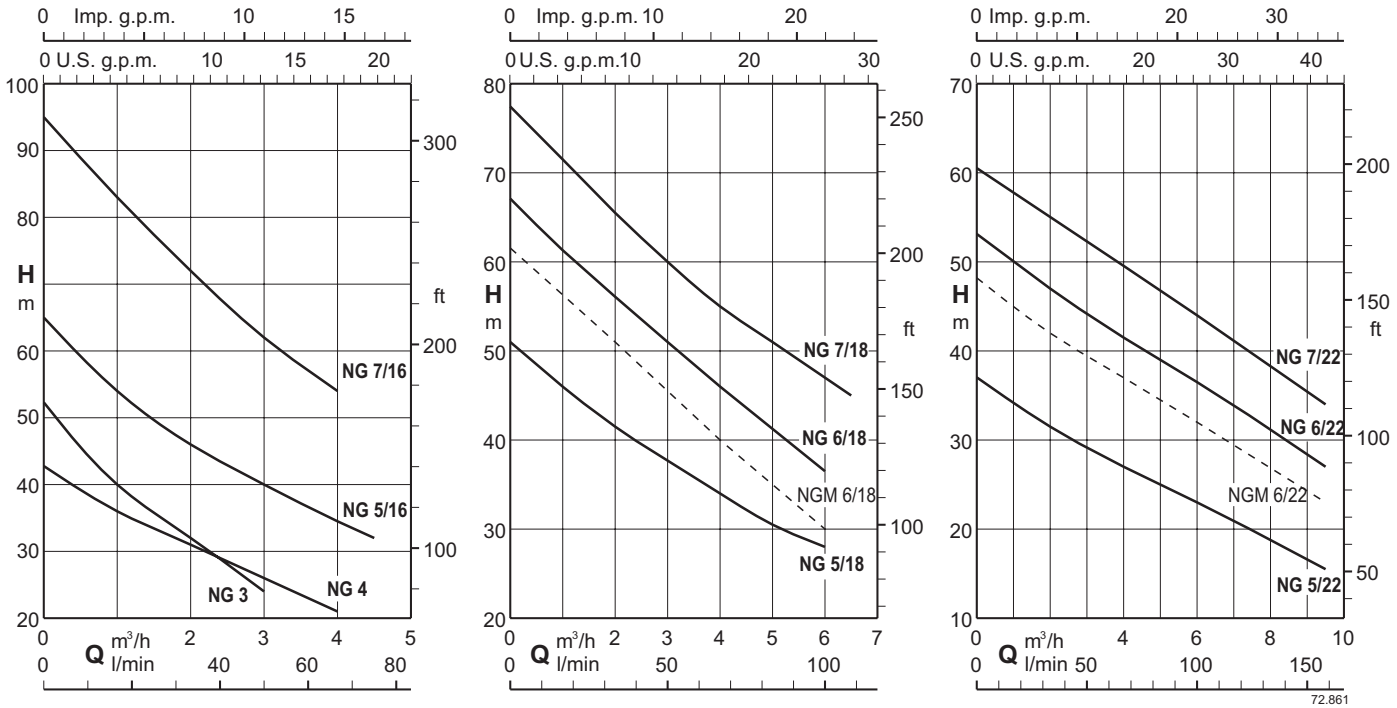


# Self-priming jet pumps

# NG

calpeda®

## Construction

Close-coupled self-priming shallow well jet pumps with built-in ejector.
NG: version with pump casing and lantern bracket in cast iron.
BNG: version with pump casing and lantern bracket in bronze.
The pumps are supplied fully painted.

## Applications

For drawing water out of a well.
For increasing network pressure (follow local specifications).
For clean liquids or slightly dirty surface water.
For garden use.
For washing with a jet of water.

## Operating conditions

Liquid temperature up to 40°C.
Ambient temperature up to 40° C.
Maximum permissible working pressure up to 10 bar.
Continuous duty (S3 60% for single-phase pump to 1,5 kW).

## Motor

2-pole induction motor, 50 Hz (n ≈ 2900 rpm).
**NG:** three-phase 230/400 V ± 10%.
**NGM:** single-phase 230 V ± 10%, with thermal protector.
Capacitor inside the terminal box.
Insulation class F.
Protection IP54
**IE2 efficiency class for single-phase motors up to 1,1 kW.**
**IE3 efficiency class for three-phase motors (IE2 up to 0,65 kW).**
Constructed in accordance with EN 60034-1.
EN 60335-1, EN 60335-2-41.

## Special features on request

Other voltages.
Frequency 60 Hz (as per 60 Hz data sheet).
Protection IP 55.
Special mechanical seal

## Designation

BNGM 5/16/A
B = Bronze version (no indication: the pump is in the Cast Iron version)
NG = Series
M = Single-phase version (no indication: three-phase)
5 = Progressive type number
16 = Diameter of Venturi body
/A = It refers to a revision

## Materials

| Components | NG | BNG |
|---|---|---|
| Pump casing | Cast iron GJL 200 EN 1561 | Bronze CC480K EN 1982 |
| Casing cover | Cast iron GJL 200 EN 1561 | Bronze CC480K EN 1982 |
| Diffuser plate | Cast iron GJL 200 EN 1561 | Bronze CC480K EN 1982 |
| Impeller | Brass CW617N EN 12167 | Brass CW617N EN 12167 |
| Shaft | Steel 1.4104 EN 10088 (AISI 430F). NG 3-4 | Stainless Steel 1.4401 EN 10088 (AISI 316) |
| Shaft | Steel 1.4305 EN 10088 (AISI 303). NG 5-6-7 | Stainless Steel 1.4401 EN 10088 (AISI 316) |
| Diffuser | Noryl PPO-GF20 | Noryl PPO-GF20 |
| Nozzle | Noryl PPO-GF20 | Noryl PPO-GF20 |
| Mechanical seal | Carbon - Ceramic - NBR | Carbon - Ceramic - NBR |

# NG

calpeda®

## Coverage chart n ≈ 2900 rpm

### Three-phase

| | | | | | | Q = Flow | | | | | | | | | | | | | | | | | | | |
|---|---|---|---|---|---|---|---|---|---|---|---|---|---|---|---|---|---|---|---|---|---|---|---|---|---|
| | | | | | | m³/h | 0 | 0,25 | 0,5 | 1 | 1,5 | 2 | 2,5 | 3 | 3,5 | 4 | 4,5 | 5 | 5,5 | 6 | 6,5 | 7 | 8 | 9 | 9,5 |
| Model | | 230V | 400V | P2 | | l/min | | 4,16 | 8,33 | 16,6 | 25 | 33,3 | 41,6 | 50 | 58,3 | 66,6 | 75 | 83,3 | 91,6 | 100 | 108 | 117 | 133 | 150 | 158 |
| | | A | | kW | HP | H (m) = Total head | | | | | | | | | | | | | | | | | | | |
| BNG | NG 3/A | 3 | 1,7 | 0,55 | 0,75 | | 52,1 | 49 | 45,5 | 40 | 36 | 32 | 28 | 24 | - | - | - | - | - | - | - | - | - | - | - |
| BNG | NG 4/B | 3,7 | 2,2 | 0,75 | 1 | | 45,8 | 41 | 39 | 36 | 33 | 31 | 29 | 26 | 24 | 21 | - | - | - | - | - | - | - | - | - |
| BNG | NG 5/16/A | 4,6 | 2,7 | 1,1 | 1,5 | | 64 | - | 59 | 54 | 50 | 46 | 43 | 40 | 37 | 34,5 | 32 | - | - | - | - | - | - | - | - |
| BNG | NG 5/18/A | 4,6 | 2,7 | 1,1 | 1,5 | | 53 | - | 48,5 | 46 | 43,5 | 41,5 | 39,5 | 38 | 35,5 | 34 | 32 | 30,5 | 29 | 28 | - | - | - | - | - |
| BNG | NG 5/22/A | 4,6 | 2,7 | 1,1 | 1,5 | | 36,5 | - | 35,5 | 34,5 | 33 | 31,5 | 30,5 | 29,5 | 28 | 27 | 26 | 25 | 23,5 | 23 | 21,5 | 20,5 | 18,5 | 16,5 | 15,5 |
| BNG | NG 6/18/A | 7,5 | 4,3 | 1,5 | 2 | | 67,3 | - | 64,5 | 62 | 59 | 56 | 54 | 51 | 48,5 | 46 | 43,5 | 41,5 | 39 | 36,5 | - | - | - | - | - |
| BNG | NG 6/22/A | 7,5 | 4,3 | 1,5 | 2 | | 53 | - | 51,5 | 50 | 48,5 | 47 | 46 | 44,5 | 43 | 41,5 | 40 | 39 | 37,5 | 36,5 | 35 | 33,5 | 31 | 28,5 | 27 |
| BNG | NG 7/16/B | 9,2 | 5,3 | 2,2 | 3 | | 95 | - | 89 | 83 | 77 | 72 | 67 | 62 | 58 | 54 | - | - | - | - | - | - | - | - | - |
| BNG | NG 7/18/B | 9,2 | 5,3 | 2,2 | 3 | | 77 | - | 74,5 | 71,5 | 68,5 | 65,5 | 63 | 60 | 57,5 | 55 | 53 | 51 | 49 | 47 | 45 | - | - | - | - |
| BNG | NG 7/22/B | 9,2 | 5,3 | 2,2 | 3 | | 60 | - | 59 | 57,5 | 56,5 | 55 | 54 | 52,5 | 51 | 50 | 48,5 | 47 | 45,5 | 44 | 42,5 | 41,5 | 38 | 35 | 34 |

### Single-phase

| | | | | | | Q = Flow | | | | | | | | | | | | | | | | | | | |
|---|---|---|---|---|---|---|---|---|---|---|---|---|---|---|---|---|---|---|---|---|---|---|---|---|---|
| | | | | | | m³/h | 0 | 0,25 | 0,5 | 1 | 1,5 | 2 | 2,5 | 3 | 3,5 | 4 | 4,5 | 5 | 5,5 | 6 | 6,5 | 7 | 8 | 9 | 9,5 |
| Model | | 230V | P2 | | P1 | l/min | | 4,16 | 8,33 | 16,6 | 25 | 33,3 | 41,6 | 50 | 58,3 | 66,6 | 75 | 83,3 | 91,6 | 100 | 108 | 117 | 133 | 150 | 158 |
| | | A | kW | HP | kW | H (m) = Total head | | | | | | | | | | | | | | | | | | | |
| BNGM | NGM 3/A | 4,5 | 0,55 | 0,75 | 0,78 | | 52,1 | 49 | 45,5 | 40 | 36 | 32 | 28 | 24 | - | - | - | - | - | - | - | - | - | - | - |
| BNGM | NGM 4/A | 5,7 | 0,75 | 1 | 1,01 | | 45,8 | 41 | 39 | 36 | 33 | 31 | 29 | 26 | 24 | 21 | - | - | - | - | - | - | - | - | - |
| BNGM | NGM 5/16E | 7,4 | 1,1 | 1,5 | 1,44 | | 64 | - | 59 | 54 | 50 | 46 | 43 | 40 | 37 | 34,5 | 32 | - | - | - | - | - | - | - | - |
| BNGM | NGM 5/18E | 7,4 | 1,1 | 1,5 | 1,44 | | 53 | - | 48,5 | 46 | 43,5 | 41,5 | 39,5 | 38 | 35,5 | 34 | 32 | 30,5 | 29 | 28 | - | - | - | - | - |
| BNGM | NGM 5/22E | 7,4 | 1,1 | 1,5 | 1,44 | | 36,5 | - | 35,5 | 34,5 | 33 | 31,5 | 30,5 | 29,5 | 28 | 27 | 26 | 25 | 23,5 | 23 | 21,5 | 20,5 | 18,5 | 16,5 | 15,5 |
| BNGM | NGM 6/18E | 9,2 | 1,5 | 2 | 2 | | 61,8 | - | 59 | 57 | 54 | 51 | 48 | 45 | 43 | 40 | 37,5 | 35 | 33 | 30 | - | - | - | - | - |
| BNGM | NGM 6/22E | 9,2 | 1,5 | 2 | 2 | | 48,5 | - | 47 | 45 | 43,5 | 42 | 41 | 40 | 38 | 37 | 36 | 35 | 33 | 32 | 31 | 30 | 27 | 24 | 23 |

**P1:** Maximum power input.
**P2:** Rated motor power output.
Tolerances according to UNI EN ISO 9906:2012

# NG

## Characteristic curves n ≈ 2900 rpm

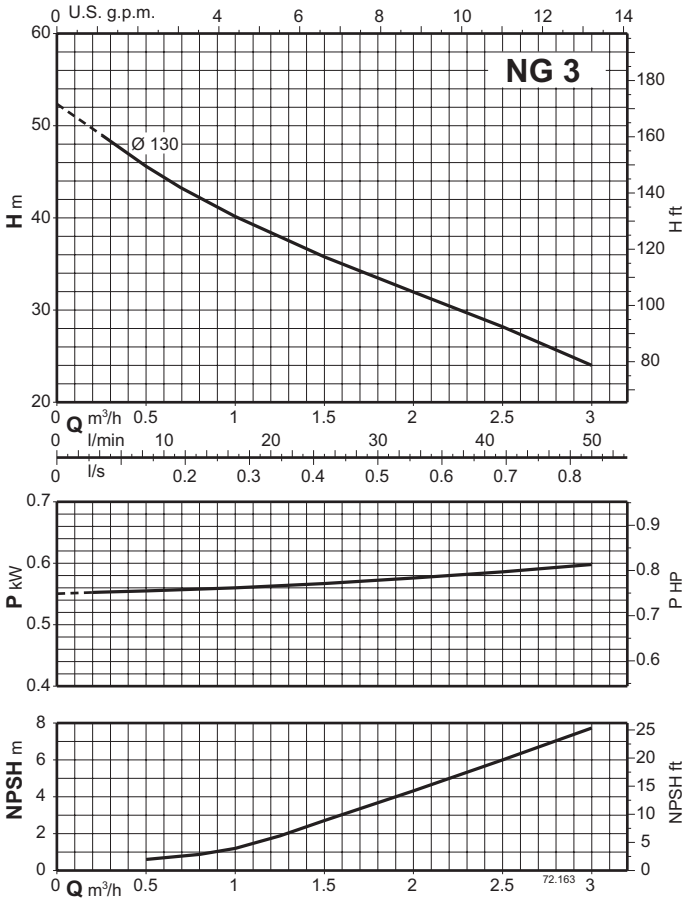


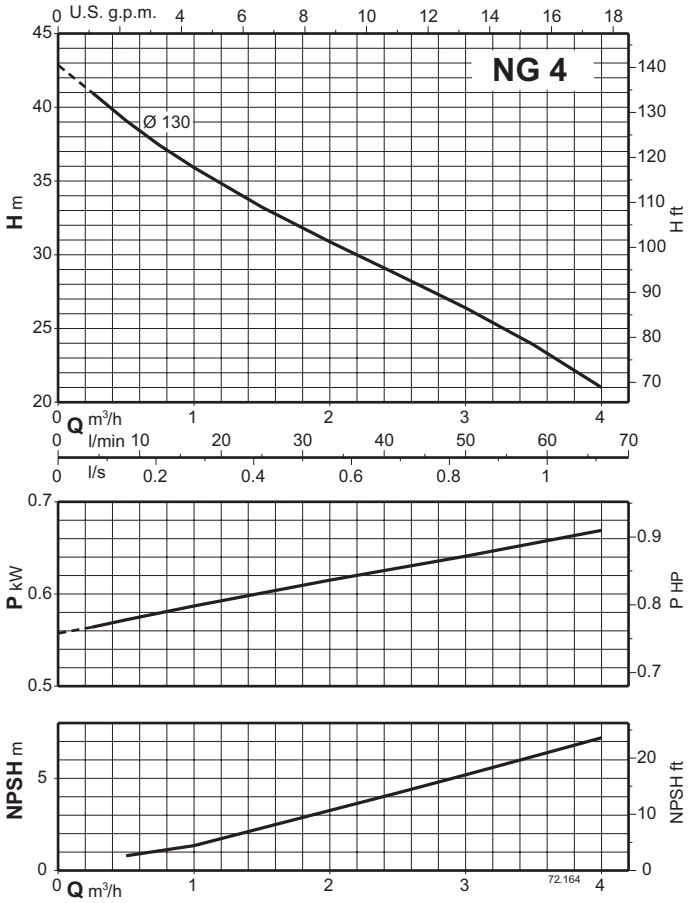

## Characteristic curves n ≈ 2900 rpm

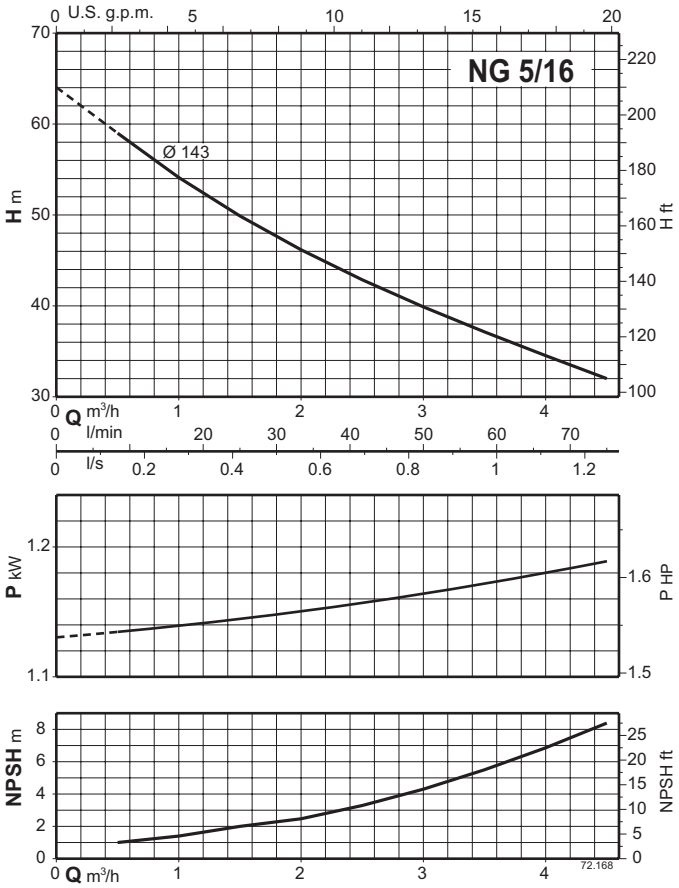


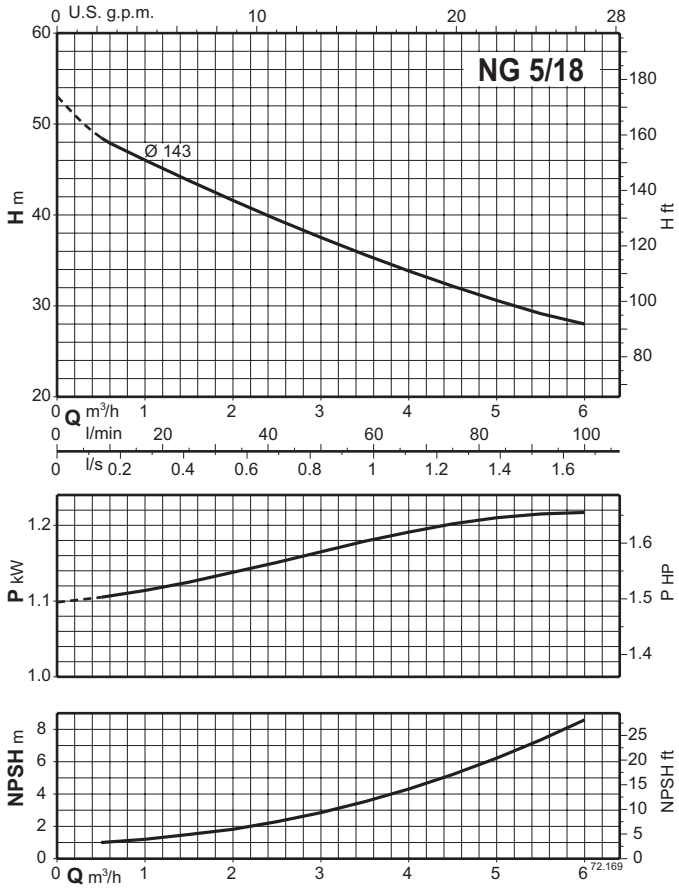


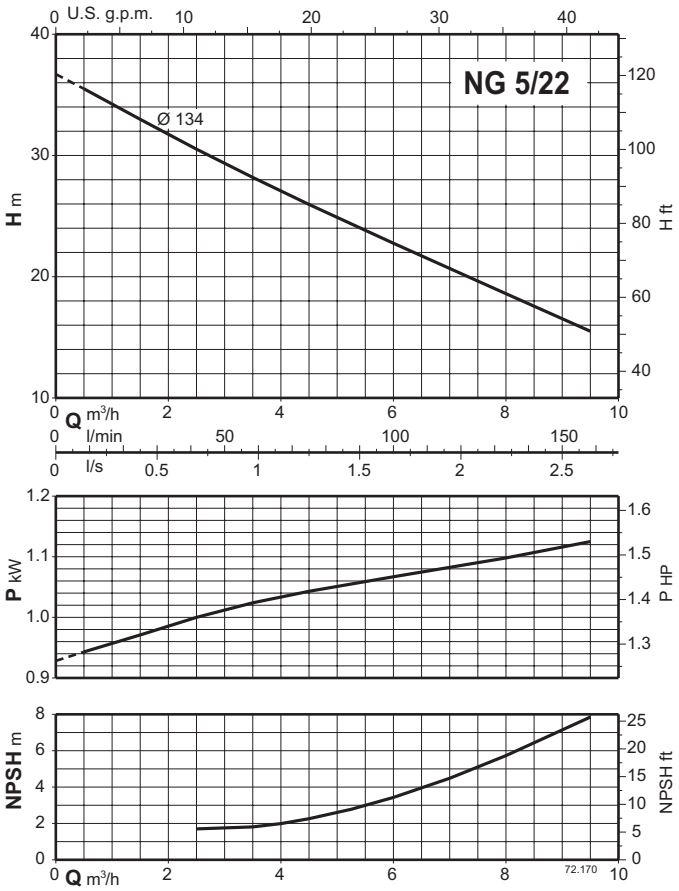

# NG

## Characteristic curves n ≈ 2900 rpm

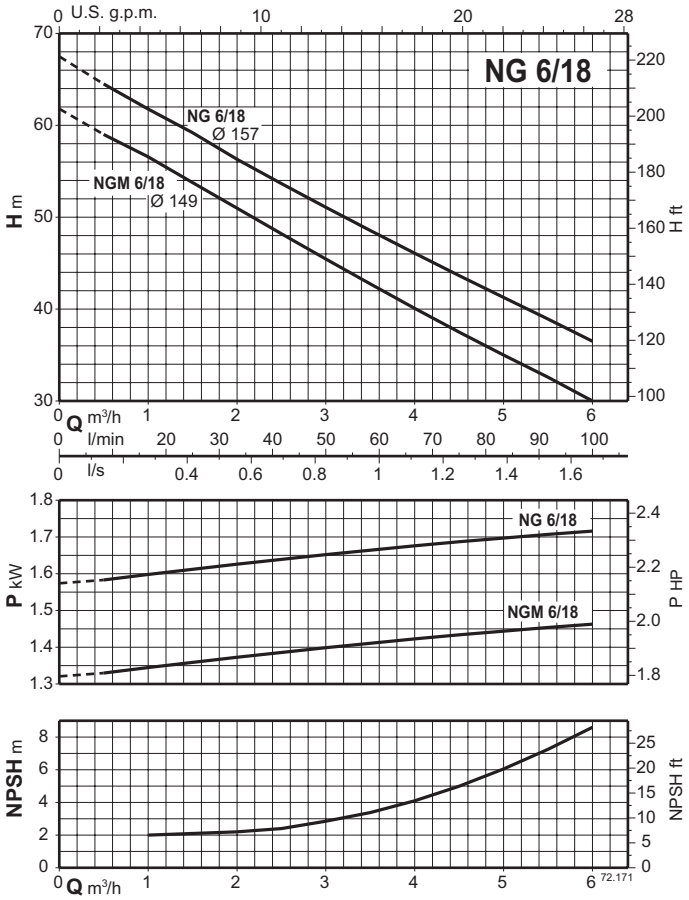


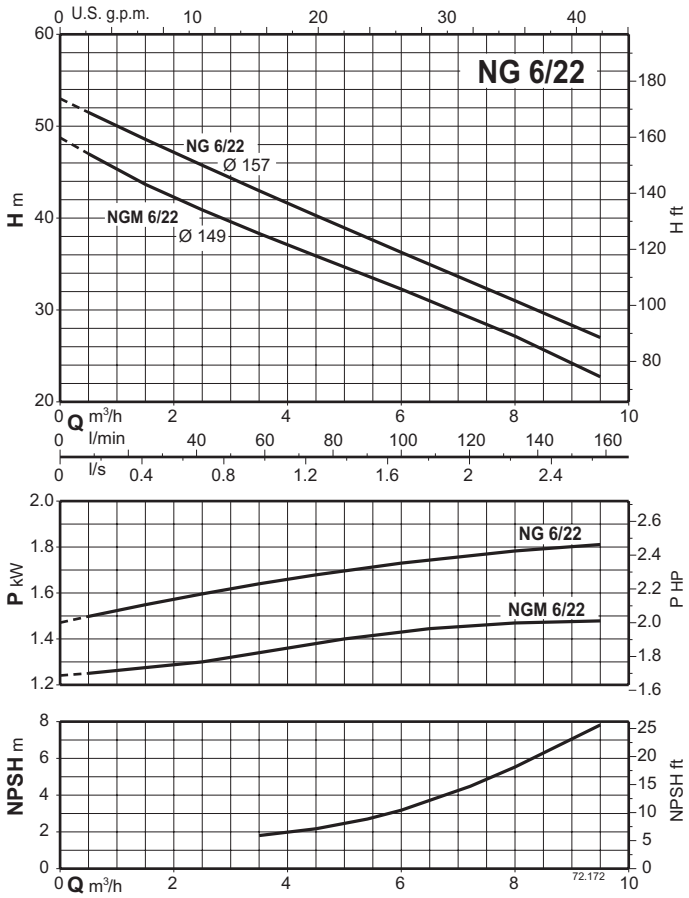

# NG

## Characteristic curves n ≈ 2900 rpm

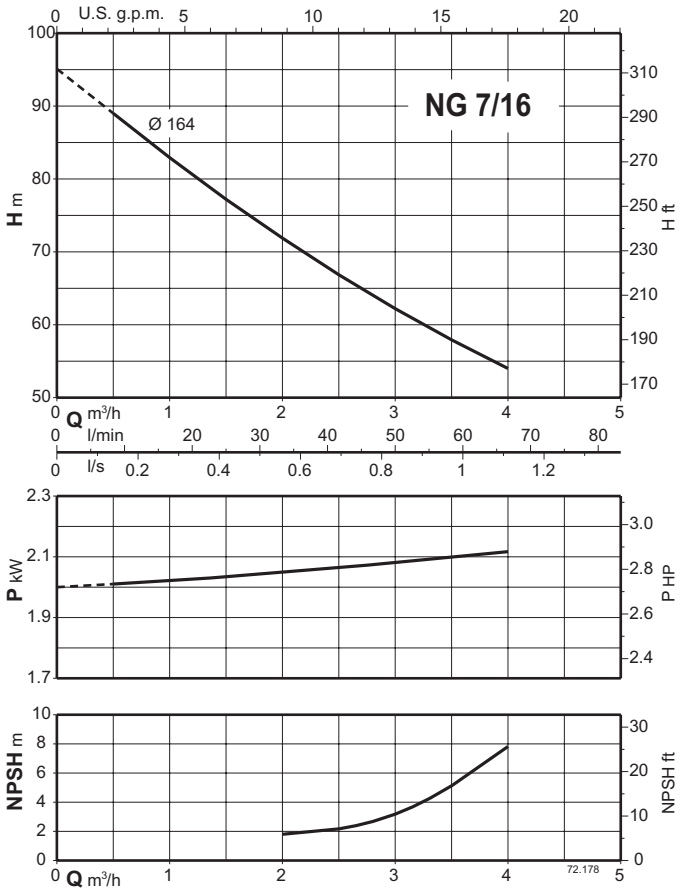


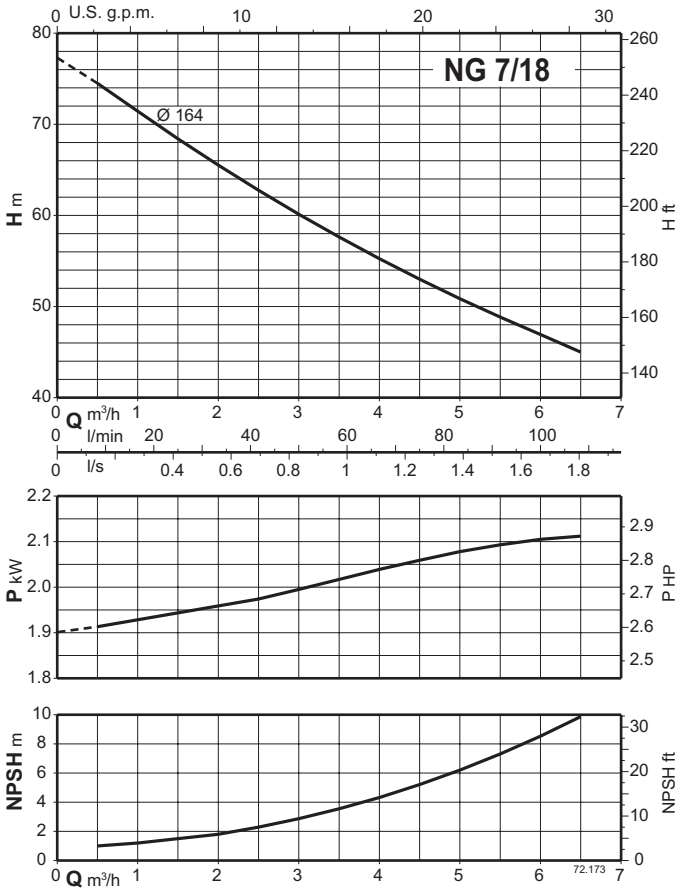


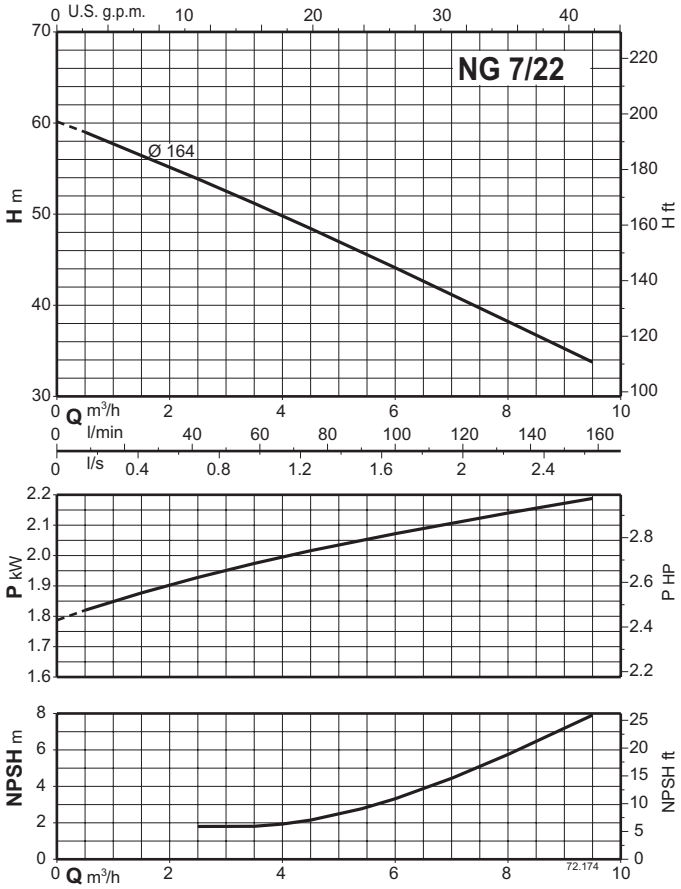

# NG

## Dimensions and weights

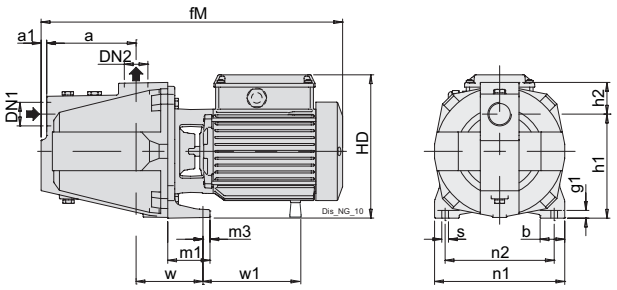


| TYPE | ISO 228 | | mm | | | | | | | | | | | | | | | kg |
|---|---|---|---|---|---|---|---|---|---|---|---|---|---|---|---|---|---|---|
| | DN1 | DN2 | a | a1 | b | fM | g1 | h1 | h2 | HD | m1 | m3 | n1 | n2 | s | w | w1 | Weight |
| NG 3/A | G 1 | G 1 | 127 | 8 | 35 | 430 | 11 | 150 | 43 | 207 | 60 | 8 | 185 | 155 | 9.5 | 100 | - | 17.3 |
| NG 4/B | G 1 | G 1 | 127 | 8 | 35 | 430 | 11 | 150 | 43 | 207 | 60 | 8 | 185 | 155 | 9.5 | 100 | - | 19.3 |
| NG 5/16/A | G 1 1/2 | G 1 | 160 | 10 | 40 | 560 | 11 | 165 | 57 | 240 | 60 | 10 | 215 | 175 | 11.5 | 115 | - | 28.1 |
| NG 5/18/A | G 1 1/2 | G 1 | 160 | 10 | 40 | 560 | 11 | 165 | 57 | 240 | 60 | 10 | 215 | 175 | 11.5 | 115 | - | 28.1 |
| NG 5/22/A | G 1 1/2 | G 1 | 160 | 10 | 40 | 560 | 11 | 165 | 57 | 240 | 60 | 10 | 215 | 175 | 11.5 | 115 | - | 28.1 |
| NG 6/18/A | G 1 1/2 | G 1 | 160 | 10 | 40 | 560 | 11 | 165 | 57 | 240 | 60 | 10 | 215 | 175 | 11.5 | 115 | - | 29.7 |
| NG 6/22/A | G 1 1/2 | G 1 | 160 | 10 | 40 | 560 | 11 | 165 | 57 | 240 | 60 | 10 | 215 | 175 | 11.5 | 115 | - | 29.7 |
| NG 7/16/B | G 1 1/2 | G 1 | 160 | 10 | 40 | 600 | 11 | 165 | 57 | 240 | 60 | 10 | 215 | 175 | 11.5 | 115 | 233 | 32.9 |
| NG 7/18/B | G 1 1/2 | G 1 | 160 | 10 | 40 | 600 | 11 | 165 | 57 | 240 | 60 | 10 | 215 | 175 | 11.5 | 115 | 233 | 32.9 |
| NG 7/22/B | G 1 1/2 | G 1 | 160 | 10 | 40 | 600 | 11 | 165 | 57 | 240 | 60 | 10 | 215 | 175 | 11.5 | 115 | 233 | 32.9 |

| TYPE | ISO 228 | | mm | | | | | | | | | | | | | | kg |
|---|---|---|---|---|---|---|---|---|---|---|---|---|---|---|---|---|---|
| | DN1 | DN2 | a | a1 | b | fM | g1 | h1 | h2 | HD | m1 | m3 | n1 | n2 | s | w | Weight |
| NGM 3/A | G 1 | G 1 | 127 | 8 | 35 | 430 | 11 | 150 | 43 | 207 | 60 | 8 | 185 | 155 | 9.5 | 100 | 18.5 |
| NGM 4/A | G 1 | G 1 | 127 | 8 | 35 | 430 | 11 | 150 | 43 | 207 | 60 | 8 | 185 | 155 | 9.5 | 100 | 19.4 |
| NGM 5/16E | G 1 1/2 | G 1 | 160 | 10 | 40 | 560 | 11 | 165 | 57 | 240 | 60 | 10 | 215 | 175 | 11.5 | 115 | 29.6 |
| NGM 5/18E | G 1 1/2 | G 1 | 160 | 10 | 40 | 560 | 11 | 165 | 57 | 240 | 60 | 10 | 215 | 175 | 11.5 | 115 | 29.7 |
| NGM 5/22E | G 1 1/2 | G 1 | 160 | 10 | 40 | 560 | 11 | 165 | 57 | 240 | 60 | 10 | 215 | 175 | 11.5 | 115 | 29.3 |
| NGM 6/18E | G 1 1/2 | G 1 | 160 | 10 | 40 | 560 | 11 | 165 | 57 | 240 | 60 | 10 | 215 | 175 | 11.5 | 115 | 29.6 |
| NGM 6/22E | G 1 1/2 | G 1 | 160 | 10 | 40 | 560 | 11 | 165 | 57 | 240 | 60 | 10 | 215 | 175 | 11.5 | 115 | 29.6 |

| TYPE | ISO 228 | | mm | | | | | | | | | | | | | | | kg |
|---|---|---|---|---|---|---|---|---|---|---|---|---|---|---|---|---|---|---|
| | DN1 | DN2 | a | a1 | b | fM | g1 | h1 | h2 | HD | m1 | m3 | n1 | n2 | s | w | w1 | Weight |
| BNG 3/A | G 1 | G 1 | 127 | 8 | 35 | 430 | 11 | 150 | 43 | 207 | 60 | 8 | 185 | 155 | 9.5 | 100 | - | 20.6 |
| BNG 4/B | G 1 | G 1 | 127 | 8 | 35 | 430 | 11 | 150 | 43 | 207 | 60 | 8 | 185 | 155 | 9.5 | 100 | - | 22.3 |
| BNG 5/16/A | G 1 1/2 | G 1 | 160 | 10 | 40 | 560 | 11 | 165 | 57 | 240 | 60 | 10 | 215 | 175 | 11.5 | 115 | - | 32.1 |
| BNG 5/18/A | G 1 1/2 | G 1 | 160 | 10 | 40 | 560 | 11 | 165 | 57 | 240 | 60 | 10 | 215 | 175 | 11.5 | 115 | - | 32.1 |
| BNG 5/22/A | G 1 1/2 | G 1 | 160 | 10 | 40 | 560 | 11 | 165 | 57 | 240 | 60 | 10 | 215 | 175 | 11.5 | 115 | - | 32.1 |
| BNG 6/18/A | G 1 1/2 | G 1 | 160 | 10 | 40 | 560 | 11 | 165 | 57 | 240 | 60 | 10 | 215 | 175 | 11.5 | 115 | - | 33.4 |
| BNG 6/22/A | G 1 1/2 | G 1 | 160 | 10 | 40 | 560 | 11 | 165 | 57 | 240 | 60 | 10 | 215 | 175 | 11.5 | 115 | - | 33.4 |
| BNG 7/16/B | G 1 1/2 | G 1 | 160 | 10 | 40 | 600 | 11 | 165 | 57 | 240 | 60 | 10 | 215 | 175 | 11.5 | 115 | 233 | 36.6 |
| BNG 7/18/B | G 1 1/2 | G 1 | 160 | 10 | 40 | 600 | 11 | 165 | 57 | 240 | 60 | 10 | 215 | 175 | 11.5 | 115 | 233 | 36.6 |
| BNG 7/22/B | G 1 1/2 | G 1 | 160 | 10 | 40 | 600 | 11 | 165 | 57 | 240 | 60 | 10 | 215 | 175 | 11.5 | 115 | 233 | 36.6 |

| TYPE | ISO 228 | | mm | | | | | | | | | | | | | | kg |
|---|---|---|---|---|---|---|---|---|---|---|---|---|---|---|---|---|---|
| | DN1 | DN2 | a | a1 | b | fM | g1 | h1 | h2 | HD | m1 | m3 | n1 | n2 | s | w | Weight |
| BNGM 3/A | G 1 | G 1 | 127 | 8 | 35 | 430 | 11 | 150 | 43 | 207 | 60 | 8 | 185 | 155 | 9.5 | 100 | 21.6 |
| BNGM 4/A | G 1 | G 1 | 127 | 8 | 35 | 430 | 11 | 150 | 43 | 207 | 60 | 8 | 185 | 155 | 9.5 | 100 | 22.4 |
| BNGM 5/16E | G 1 1/2 | G 1 | 160 | 10 | 40 | 560 | 11 | 165 | 57 | 240 | 60 | 10 | 215 | 175 | 11.5 | 115 | 34 |
| BNGM 5/18E | G 1 1/2 | G 1 | 160 | 10 | 40 | 560 | 11 | 165 | 57 | 240 | 60 | 10 | 215 | 175 | 11.5 | 115 | 34 |
| BNGM 5/22E | G 1 1/2 | G 1 | 160 | 10 | 40 | 560 | 11 | 165 | 57 | 240 | 60 | 10 | 215 | 175 | 11.5 | 115 | 34 |
| BNGM 6/18E | G 1 1/2 | G 1 | 160 | 10 | 40 | 560 | 11 | 165 | 57 | 240 | 60 | 10 | 215 | 175 | 11.5 | 115 | 34 |
| BNGM 6/22E | G 1 1/2 | G 1 | 160 | 10 | 40 | 560 | 11 | 165 | 57 | 240 | 60 | 10 | 215 | 175 | 11.5 | 115 | 34 |

## Examples of installations

Positive suction head operation

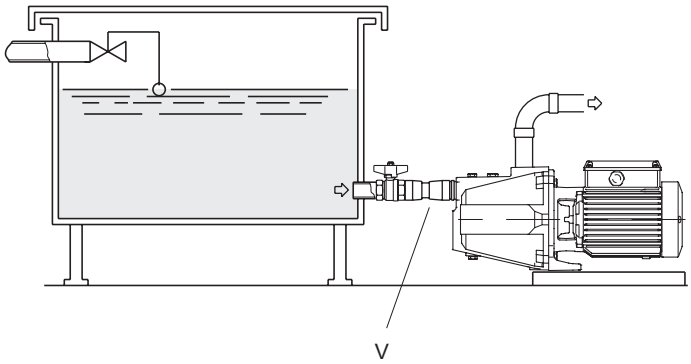


Operation with suction lift

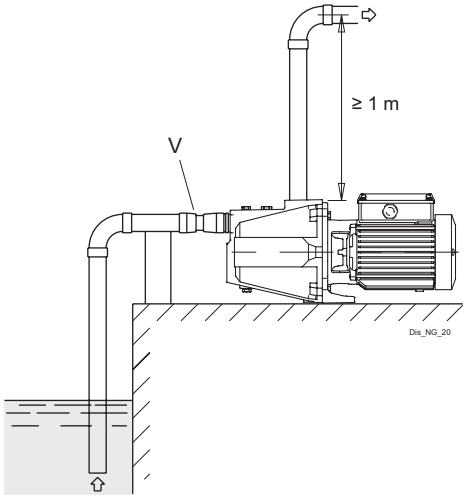


Check valve

# MXA

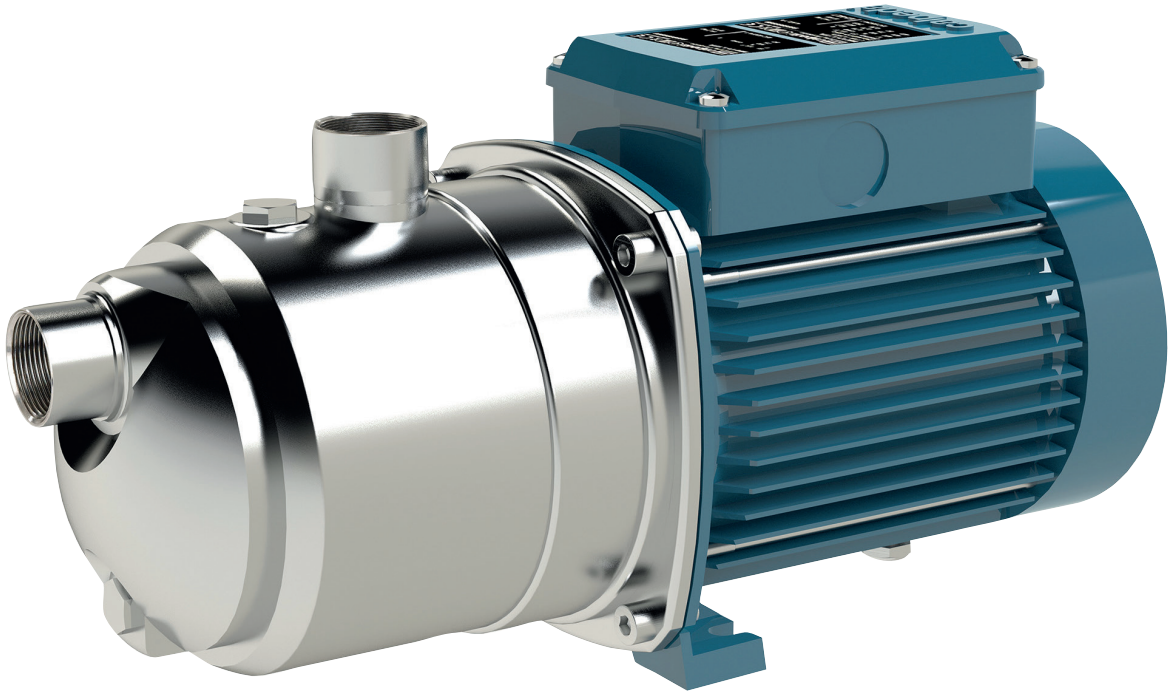

**Coverage chart n ≈ 2800 rpm**

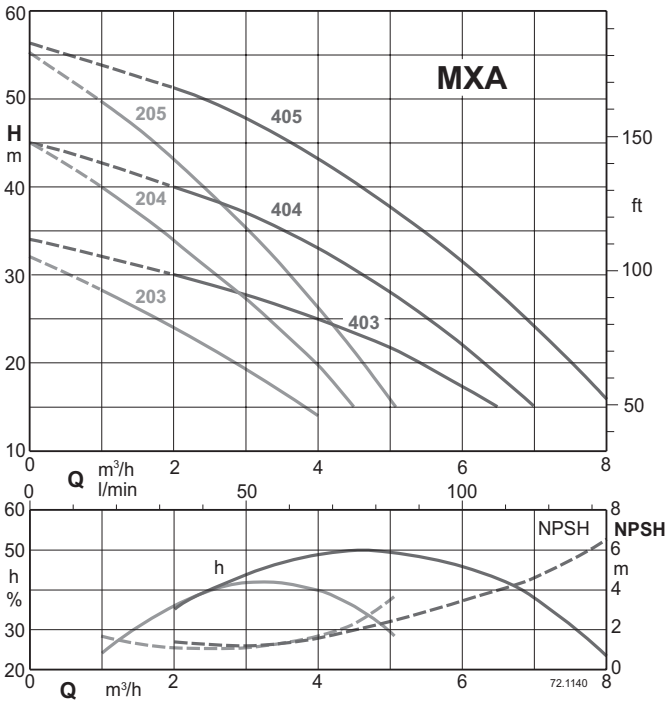


H2O, T = 20°C,
Pa = 1000 hPa (mbar)
50 Hz (n ≈ 2800 1/min)

| Hs (m) ≤ | h (mm) | | | | | |
|---|---|---|---|---|---|---|
| | 203 | 204 | 205 | 403 | 404 | 405 |
| 2 | 100 | 100 | 500 | 100 | 100 | 500 |
| 4 | 200 | 200 | 500 | 450 | 450 | 500 |
| 6 | 450 | 450 | 500 | 600 | 600 | 600 |
| 8 | 600 | 600 | 600 | 600 | 600 | 600 |

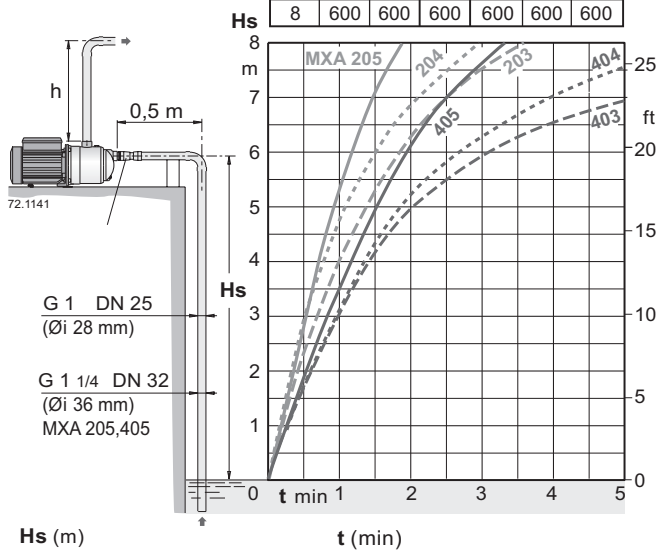


# Horizontal multi-stage self-priming close coupled pumps

# MXA

calpeda®

## Construction

Horizontal multi-stage, self-priming, close coupled pump.
Single-piece barrel casing in chrome-nickel stainless steel, with front suction port above pumps axis and radial delivery at top.
Stages in Noryl.

## Applications

For water supply systems.
For domestic use, for garden use and irrigation.

## Operating conditions

Liquid temperature: 0 °C to +35 °C.
Ambient temperature up to 40° C.
Suction lift up to 8 m.
Maximum permissible pressure in the pump casing: 8 bar.
Continuous service (S3 60% for 1.5 kW single-phase pumps).

## Motor

2-pole induction motor, 50 Hz (n ≈ 2800 1/min).
**MXA:** three-phase 230/400 V ± 10%.
**MXAM:** single-phase 230 V ± 10%, with thermal protector.
Capacitor inside the terminal box.
Insulation class F.
Protection IP54
**IE2 efficiency class for single-phase motors up to 1,1 kW.**
**IE3 efficiency class for three-phase motors (IE2 up to 0,65 kW).**
Constructed in accordance with EN 60034-1; EN 60034-30-1.
EN 60335-1, EN 60335-2-41.

## Special features on request

Other voltages.
Frequency 60 Hz (as per 60 Hz data sheet).
IP protection: IP55

## Designation

MXAM 204/A
MXA = Series
M = Single-phase version (no indication: three-phase)
2 = Rated flow in m3/h
04 = Number of impellers
/A = It refers to a revision

## Materials

| Component | Material |
|---|---|
| Pump casing | Chrome-nickel steel 1.4301 EN 10088 (AISI 304) |
| Casing cover | Chrome-nickel steel 1.4301 EN 10088 (AISI 304) |
| Shaft | Steel 1.4104 EN 10088 (AISI 430F) |
| Plug | Chrome-nickel steel 1.4305 EN 10088 (AISI 303) |
| Suction casing | Noryl PPO-GF20 |
| Stage casing | Noryl PPO-GF20 |
| Impeller | Noryl PPO-GF20 |
| Mechanical seal | Carbon - Ceramic - NBR |

# MXA

calpeda®

## Coverage chart n ≈ 2900 rpm

### Single-phase

| | | | | | Q = Flow | | | | | | | |
|---|---|---|---|---|---|---|---|---|---|---|---|---|
| | | | | | m³/h | 0 | 1 | 2 | 3 | 4 | 4,5 | 5 |
| Model | 230V | P2 | | P1 | l/min | | 16,6 | 33,3 | 50 | 66,6 | 75 | 83,3 |
| | A | kW | HP | kW | H (m) = Total head | | | | | | | |
| MXAM 203 | 3 | 0,37 | 0,5 | 0,57 | | 32 | 28 | 24 | 19 | 14 | - | - |
| MXAM 204/A | 4,5 | 0,55 | 0,75 | 0,78 | | 45 | 40 | 34 | 27 | 20 | 15 | - |
| MXAM 205/A | 5,7 | 0,75 | 1 | 1,01 | | 55,5 | 50 | 43 | 35,5 | 26,5 | 21,5 | 15,5 |

### Three-phase

| | | | | | Q = Flow | | | | | | | |
|---|---|---|---|---|---|---|---|---|---|---|---|---|
| | | | | | m³/h | 0 | 1 | 2 | 3 | 4 | 4,5 | 5 |
| Model | 230V | 400V | P2 | | l/min | | 16,6 | 33,3 | 50 | 66,6 | 75 | 83,3 |
| | A | | kW | HP | H (m) = Total head | | | | | | | |
| MXA 203 | 2,4 | 1,4 | 0,37 | 0,5 | | 32 | 28 | 24 | 19 | 14 | - | - |
| MXA 204/A | 2,8 | 1,6 | 0,55 | 0,75 | | 45 | 40 | 34 | 27 | 20 | 15 | - |
| MXA 205/B | 3,7 | 2,2 | 0,75 | 1 | | 55,5 | 50 | 43 | 35,5 | 26,6 | 21,4 | 15,5 |

### Single-phase

| | | | | | Q = Flow | | | | | | | | | |
|---|---|---|---|---|---|---|---|---|---|---|---|---|---|---|
| | | | | | m³/h | 0 | 2 | 3 | 4 | 5 | 6 | 6,5 | 7 | 8 |
| Model | 230V | P2 | | P1 | l/min | | 33,3 | 50 | 66,6 | 83,3 | 100 | 108 | 117 | 133 |
| | A | kW | HP | kW | H (m) = Total head | | | | | | | | | |
| MXAM 403/A | 4,5 | 0,55 | 0,75 | 0,78 | | 34 | 30 | 28 | 25 | 22 | 17 | 15 | - | - |
| MXAM 404/A | 5,7 | 0,75 | 1 | 1,01 | | 45 | 40 | 37 | 33 | 28 | 22 | 19 | 15 | - |
| MXAM 405/A | 7 | 1,1 | 1,5 | 1,44 | | 56 | 51 | 47,5 | 42,5 | 36,5 | 30 | 26,5 | 23 | 14 |

### Three-phase

| | | | | | Q = Flow | | | | | | | | | |
|---|---|---|---|---|---|---|---|---|---|---|---|---|---|---|
| | | | | | m³/h | 0 | 2 | 3 | 4 | 5 | 6 | 6,5 | 7 | 8 |
| Model | 230V | 400V | P2 | | l/min | | 33,3 | 50 | 66,6 | 83,3 | 100 | 108 | 117 | 133 |
| | A | | kW | HP | H (m) = Total head | | | | | | | | | |
| MXA 403/A | 2,8 | 1,6 | 0,55 | 0,75 | | 34 | 30 | 28 | 25 | 22 | 17 | 15 | - | - |
| MXA 404/B | 3,5 | 2 | 0,75 | 1 | | 45 | 40 | 37 | 33 | 28 | 22 | 19 | 15 | - |
| MXA 405/A | 4,5 | 2,6 | 1,1 | 1,5 | | 56 | 51 | 47,5 | 42,5 | 36,5 | 30 | 26,5 | 23 | 14 |

**P1:** Maximum power input.
**P2:** Rated motor power output.
**Test results with clean cold water, without gas content.**
A safety margin of + 0.5 m is recommended for the NPSH value.
For flow rates greater than 4 m³/h use a G1 1/4 suction pipe (DN 32).
Tolerances according to UNI EN ISO 9906:2012

# MXA

## Dimensions and weights

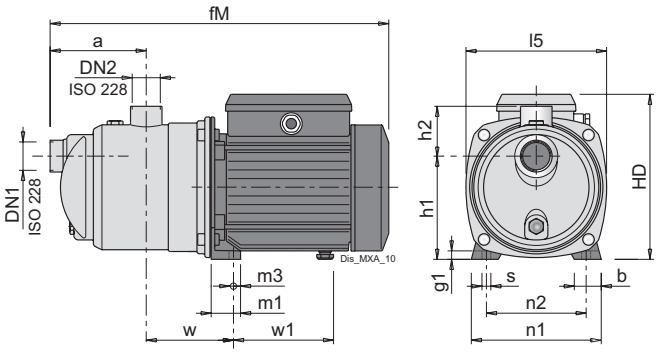


| TYPE | ISO 228 | | mm | | | | | | | | | | | | | | | kg |
|---|---|---|---|---|---|---|---|---|---|---|---|---|---|---|---|---|---|---|
| | DN1 | DN2 | a | b | fM | g1 | h1 | h2 | HD | l5 | m1 | m3 | n1 | n2 | s | w | w1 | Weight |
| **MXA 203** | G 1 | G 1 | 115 | 30 | 362 | 10 | 116 | 61 | 176 | 161 | 33 | 8 | 146 | 112 | 9 | 102 | 102 | 6.8 |
| **MXA 204/A** | G 1 | G 1 | 115 | 30 | 691 | 10 | 116 | 61 | 192 | 161 | 33 | 8 | 146 | 112 | 9 | 112 | 112 | 8.9 |
| **MXA 205/B** | G 1 1/4 | G 1 | 140 | 33 | 462 | 11 | 152 | 68 | 225 | 213.5 | 37.5 | 9.5 | 185 | 155 | 9.5 | 147 | 147 | 12.8 |
| **MXA 403/A** | G 1 | G 1 | 115 | 30 | 391 | 10 | 116 | 61 | 192 | 161 | 33 | 8 | 146 | 112 | 9 | 112 | 112 | 8.8 |
| **MXA 404/B** | G 1 | G 1 | 115 | 30 | 391 | 10 | 116 | 61 | 192 | 161 | 33 | 8 | 146 | 112 | 9 | 112 | 112 | 10.8 |
| **MXA 405/A** | G 1 | G 1 | 140 | 33 | 462 | 11 | 152 | 68 | 225 | 213.5 | 37.5 | 9.5 | 185 | 155 | 9.5 | 147 | 147 | 14.5 |

| TYPE | ISO 228 | | mm | | | | | | | | | | | | | | | kg |
|---|---|---|---|---|---|---|---|---|---|---|---|---|---|---|---|---|---|---|
| | DN1 | DN2 | a | b | fM | g1 | h1 | h2 | HD | l5 | m1 | m3 | n1 | n2 | s | w | w1 | Weight |
| **MXAM 203** | G 1 | G 1 | 115 | 30 | 362 | 10 | 116 | 61 | 176 | 161 | 33 | 8 | 146 | 112 | 9 | 102 | 102 | 6.8 |
| **MXAM 204/A** | G 1 | G 1 | 115 | 30 | 691 | 10 | 116 | 61 | 192 | 161 | 33 | 8 | 146 | 112 | 9 | 112 | 112 | 10 |
| **MXAM 205/A** | G 1 1/4 | G 1 | 140 | 33 | 462 | 11 | 152 | 68 | 225 | 213.5 | 37.5 | 9.5 | 185 | 155 | 9.5 | 147 | 147 | 12.8 |
| **MXAM 403/A** | G 1 | G 1 | 115 | 30 | 391 | 10 | 116 | 61 | 192 | 161 | 33 | 8 | 146 | 112 | 9 | 112 | 112 | 9.9 |
| **MXAM 404/A** | G 1 | G 1 | 115 | 30 | 391 | 10 | 116 | 61 | 192 | 161 | 33 | 8 | 146 | 112 | 9 | 112 | 112 | 10.9 |
| **MXAM 405/A** | G 1 | G 1 | 140 | 33 | 462 | 11 | 152 | 68 | 225 | 213.5 | 37.5 | 9.5 | 185 | 155 | 9.5 | 147 | 147 | 14.6 |

ed. 03/2025

# GM 5-9

**Coverage chart n ≈ 2800 rpm**

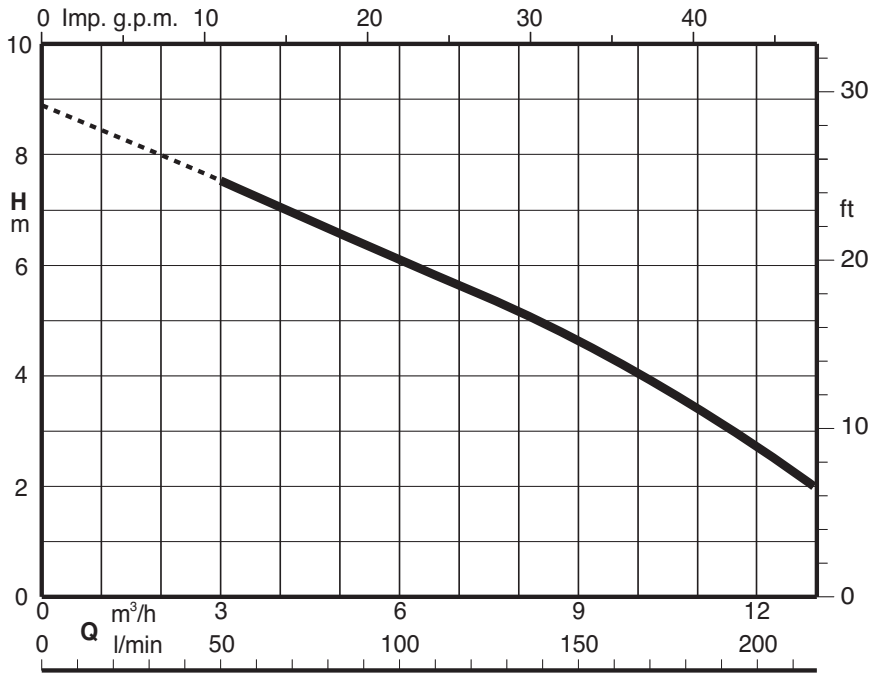


# Submersible drainage pump

# GM 5-9

## Construction

Submersible drainage pump constructed with composite polymers developed especially for this product.
Double shaft seal with oil chamber.
Compact in size yet delivering excellent performance, this pump is suitable for a wide range of applications, with flow rates of up to 217 liters per minute. It is equipped with a float switch for automatic start and stop.
With float switch for automatic start and stop.

## Applications

For clean water with suspended solids up to a diameter of 5 mm.
For draining flooded rooms or tanks.
Water extraction from ponds, flowing streams, or pits for rainwater collection.
For irrigation.

## Operating conditions

Maximum liquid temperature for prolonged use: 35 °C (with immersed motor).
Immersion depth: 5 m max.

## Motor

2-pole induction motor, 50 Hz (n ≈ 2800 1/min).
Single-phase 230 V ± 10%, with thermal protector.
Incorporated capacitor
Cable H05RN-F, 3G0,75 mm2: with plug, length 10 m, 245IEC57, according to EN 60335-2-41 for pumps up to 10 kg.
Insulation class F.
Protection IP 68.

## Materials

| Components | Materials |
|---|---|
| Pump casing | PP+GF30 |
| Impeller | PA66+GF30 |
| motor jacket | Chrome-nickel steel 1.4301 EN 10088 (AISI 304) |
| Pump jacket | PP+GF30 |
| Filter | PP+GF30 |
| Handle | PP+GF30 |
| Shaft | Steel C45E EN 10083-2 |
| Mechanical seal | Graphite/Ceramic/NBR |

## Performance n ≈ 2800 rpm

### Single-phase

| | | | | | Q = Flow | | | | | | | |
|---|---|---|---|---|---|---|---|---|---|---|---|---|
| | | | | | m³/h | 0 | 1,2 | 3 | 6 | 9 | 12 | 13 |
| Model | 230V | P2 | | P1 | l/min | | 20 | 50 | 100 | 150 | 200 | 217 |
| | A | kW | HP | kW | H (m) = Total head | | | | | | | |
| GM 5-9 | 2,4 | 0,33 | 0,45 | 0,55 | | 8,9 | 8,2 | 7,6 | 6,1 | 4,7 | 2,8 | 2 |

**P1:** Maximum power input.
**P2:** Rated motor power output.
**H:** Total head in m

## Dimensions and weights

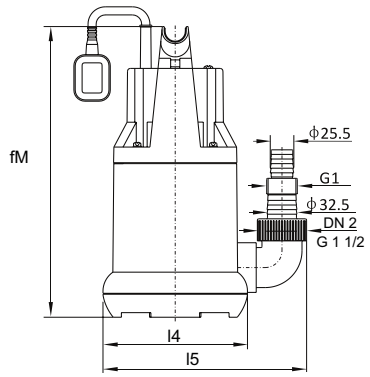


| TYPE | | mm | | | | | kg |
|---|---|---|---|---|---|---|---|
| | DN2 | fM | l4 | l5 | Lmax | Lmin | Weight |
| **GM 5-9** | G 1 1/2 | 316 | 157 | 222 | 340 | 120 | 4.7 |

## Examples of installations

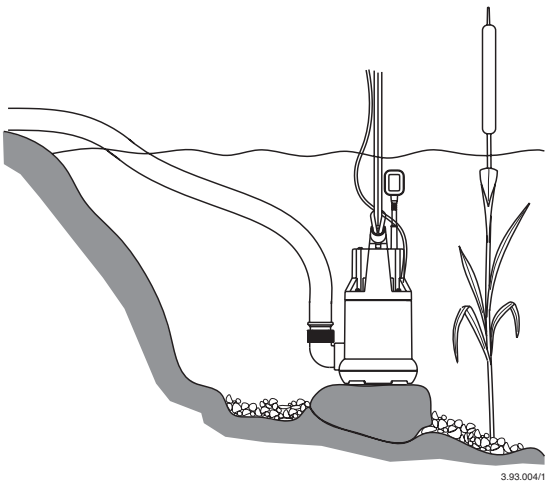


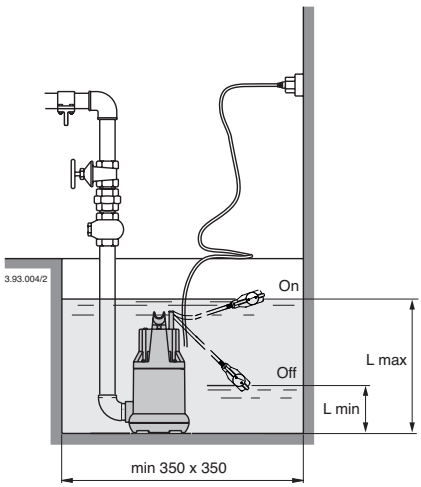

ed. 03/2025

# GM 10-8

**Coverage chart n ≈ 2900 rpm**

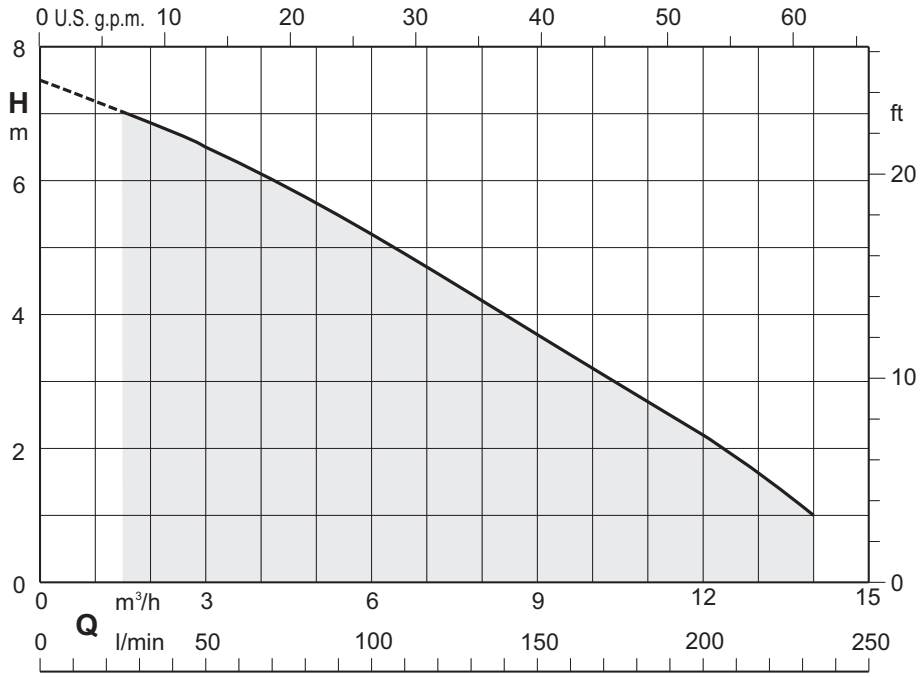


# Submersible drainage pump

# GM 10-8

## Construction

Submersible drainage pump constructed with composite polymers developed especially for this product.
Double shaft seal with oil chamber.
Compact in size yet delivering excellent performance, this pump is suitable for a wide range of applications,
Equipped with float switch for automatic start and stop.

## Applications

For clean or slightly dirty water.
For draining flooded rooms or tanks.
Water extraction from ponds, flowing streams, or pits for rainwater collection.
For irrigation.
For use outdoor, the power supply cable shall have a length not less than 10 m.

## Operating conditions

Maximum liquid temperature for prolonged use: 35 °C (with immersed motor).
Immersion depth: 5 m max (with suitable cable length).
Continuous duty.

## Motor

2-pole induction motor, 50 Hz (n ≈ 2900 rpm).
Single-phase 230 V ± 10%, with thermal protector.
Incorporated capacitor
H05RN-F cable, 3G0.75 mm2, length 5 m, with CEI-UNEL 47166 plug.
Insulation class F.
Protection IP X8.
Double impregnation humidity-proof dry winding.

## Materials

| Components | Materials |
|---|---|
| Pump casing | PP+30FV Polypropylene |
| Cover | PP+30FV Polypropylene |
| Impeller | PPO-GF20 (Noryl) |
| motor jacket | Chrome-nickel steel 1.4301 EN 10088 (AISI 304) |
| Jacket cover | Chrome-nickel steel 1.4301 EN 10088 (AISI 304) |
| Handle | Polypropylene (with frame made of AISI 304) |
| Shaft | Steel 1.4104 EN 10088 (AISI 430) |
| Mechanical seal | Alumina/Carbon/NBR |
| Seal lubrication oil | Oil for food/pharmaceutical machinery |

## Special features on request

Other voltages.
Frequency 60 Hz (as per 60 Hz data sheet).
Other mechanical seal.
Vertical magnetic float switch.
Without float switch.
With elbow on discharge port.

## Designation

Example: GM 10-8
GM = Series
M = Single-phase
10 = Solids passage diameter
8 = Total head in m indoors

## Coverage chart n ≈ 2900 rpm

### Single-phase

| | | | | | Q = Flow | | | | | | | |
|---|---|---|---|---|---|---|---|---|---|---|---|---|
| | | | | | m³/h | 0 | 1,2 | 3 | 6 | 9 | 12 | 14 |
| Model | 230V | P2 | | P1 | l/min | | 20 | 50 | 100 | 150 | 200 | 233 |
| | A | kW | HP | kW | H (m) = Total head | | | | | | | |
| GM 10-8 | 2 | 0,25 | 0,34 | 0,4 | | 7,5 | 7 | 6,4 | 5,2 | 3,8 | 2,2 | 1 |

**P1:** Maximum power input.
**P2:** Rated motor power output.
**H:** Total head in m

# GM 10-8

## Dimensions and weights

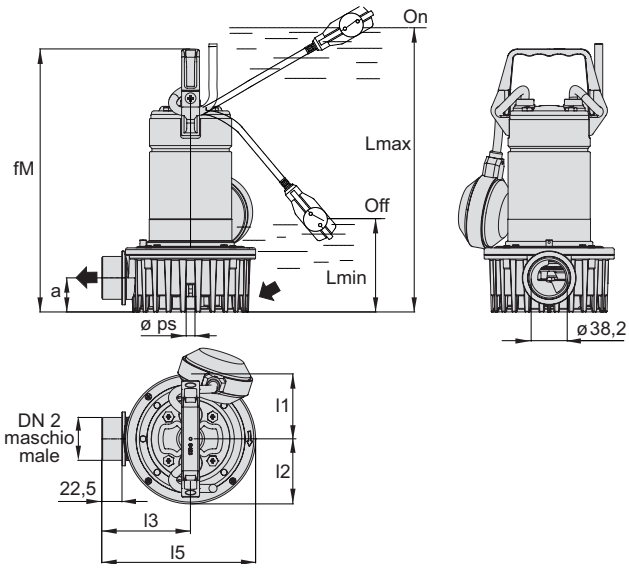


| TYPE | ISO 228 | mm | | | | | | | | |
|---|---|---|---|---|---|---|---|---|---|---|
| | DN2 | a | fM | l1 | l2 | l5 | l5 | Lmax | Lmin | ps |
| **GM 10-8** | G1 1/2 | 38 | 293.4 | 72.5 | 72.5 | 99 | 171,5 | 370 | 110 | 10 |

## Installation examples with vertical magnetic float switch

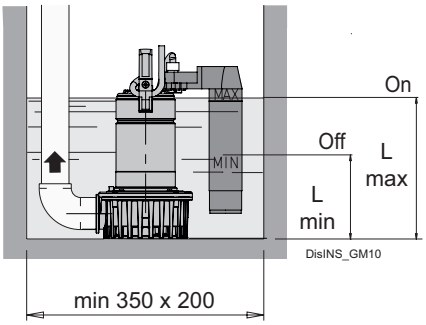


| TYPE | ISO 228 | mm | | | | | | | | |
|---|---|---|---|---|---|---|---|---|---|---|
| | DN2 | a | fM | l1 | l2 | l5 | l5 | Lmax | Lmin | ps |
| **GM 10-8 GF** | G1 1/2 | 38 | 293.4 | 72.5 | 72.5 | 99 | 171,5 | 218 | 128 | 10 |

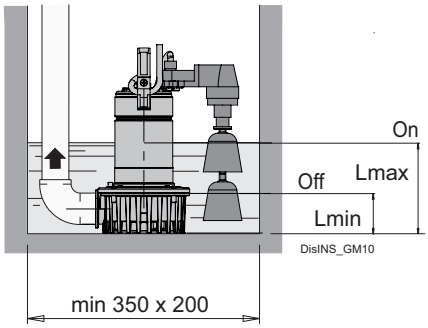


| TYPE | ISO 228 | mm | | | | | | | | |
|---|---|---|---|---|---|---|---|---|---|---|
| | DN2 | a | fM | l1 | l2 | l5 | l5 | Lmax | Lmin | ps |
| **GM 10-8 GFA** | G1 1/2 | 38 | 293.4 | 72.5 | 72.5 | 99 | 171,5 | 142 | 62 | 10 |

## Examples of installations

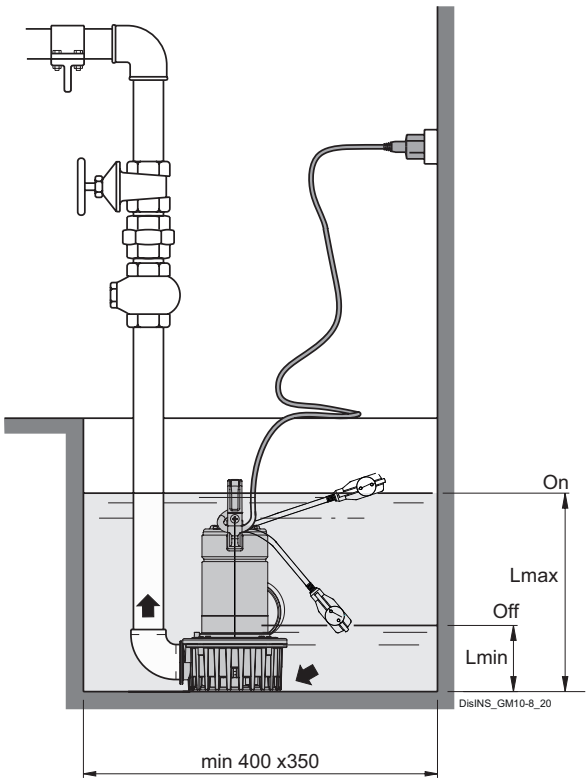

ed. 03/2025

# GXR, GXV

(patented system)

**Coverage chart n ≈ 2900 rpm**

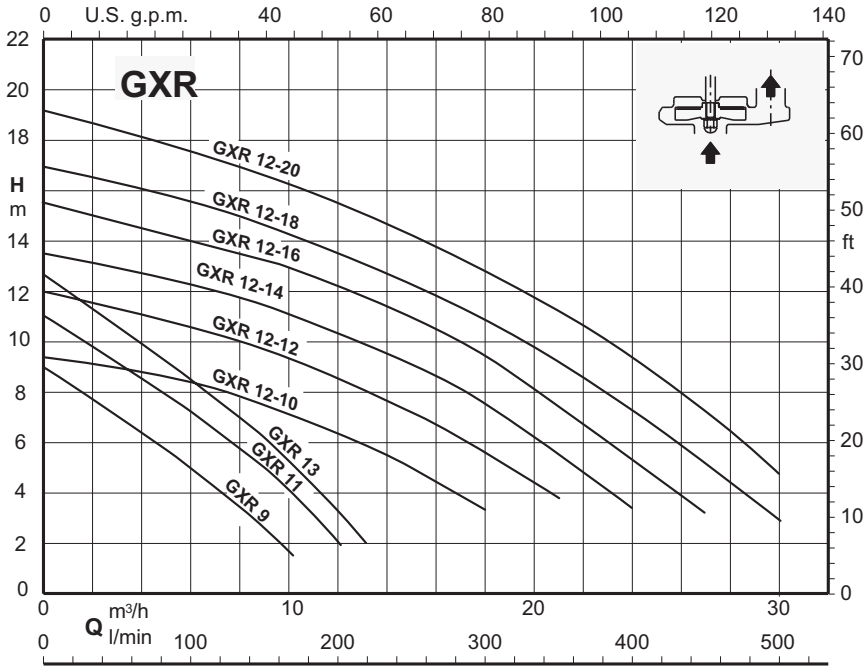


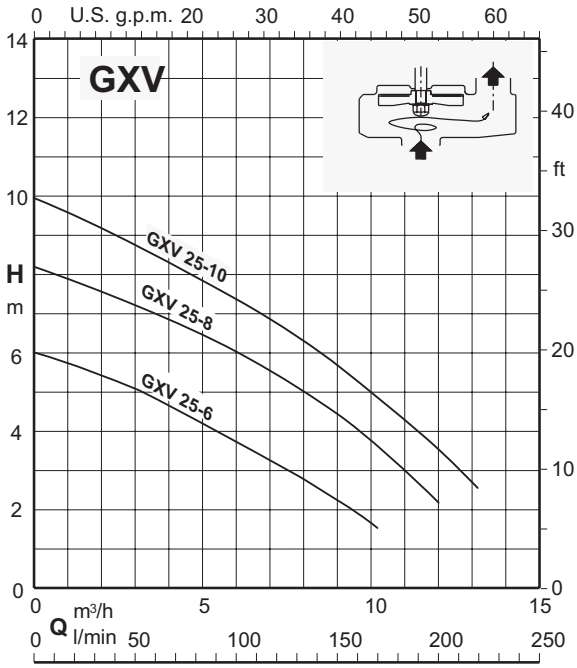


# Stainless steel submersible pumps

# GXR, GXV

calpeda®

## Construction

Single-impeller submersible pumps in chrome-nickel stainless steel, with vertical delivery port.
GXR: with open impeller.
GXV: with free-flow (vortex) impeller.
Motor cooled by the pumped water passing between the motor jacket and the external jacket.
Double shaft seal with oil chamber.

## Applications

GXR:
Clean water with suspended solids up to a diameter of 10 mm (12 mm for GXR 12..).
draining flooded rooms or tanks.
Extraction of water from ponds, streams or pits and for rainwater collection.
GXV:
For clean or slightly dirty water, containing solids up to 25 mm grain size.
Particularly suitable for liquids with a high solid content.
For outdoor use a power supply cable of not less than 10 m should be used in accordance EN 60 335-2-41.

## Operating conditions

Liquid temperature up to 50°C (40°C for GXR 12..).
Maximum immersion depth: 5 m.
Minimum water level with float: GXR = 70 mm, GXV = 130 mm.
Minimum water level manual operation: GXR = 15 mm, GXV = 30 mm.
Continuous duty.

## Motor

2-pole induction motor, 50 Hz (n ≈ 2900 rpm).
**GXR, GXV:** three-phase 230 V ± 10%;
400V ± 10%;
**GXRM, GXVM:** single-phase 230 V ± 10%,
with float switch and thermal protector.
Incorporated capacitor.
Insulation class F.
Protection IP X8 (for continuous immersion)
Double impregnation humidity-proof dry winding.
Constructed in accordance with EN 60034-1.

## Special features on request

Other voltages.
Frequency 60 Hz (as per 60 Hz data sheet).
Other mechanical seal.
Cable length 10 m (20 m for GXR 12..).
Vertical magnetic float switch.
Motor suitable for operation with frequency converter.
Three-phase pumps with built-in switch and float.

## Designation

Example: GXVLM 25-10
GX = Series
**V** = Vortex impeller R with open impeller.
L = AISI 316L vesion (no code = AISI 304 vesion)
M = Single-phase (no indication: three-phase)
**25** = Solids passage diameter
10 = Total head in m indoors

## Materials

| **Components** | **GX materials... AISI 304** | **Materials GXVL 25-10 AISI 316** |
|---|---|---|
| Pump casing | Chrome-nickel steel 1.4301 EN 10088 (AISI 304) | Stainless Steel 1.4404 EN 10088 (AISI 316L) |
| Filter | Chrome-nickel steel 1.4301 EN 10088 (AISI 304) | Stainless Steel 1.4404 EN 10088 (AISI 316L) |
| Impeller | Chrome-nickel steel 1.4301 EN 10088 (AISI 304) | Stainless Steel 1.4404 EN 10088 (AISI 316L) |
| motor jacket | Chrome-nickel steel 1.4301 EN 10088 (AISI 304) | Stainless Steel 1.4404 EN 10088 (AISI 316L) |
| Pump jacket | Chrome-nickel steel 1.4301 EN 10088 (AISI 304) | Stainless Steel 1.4404 EN 10088 (AISI 316L) |
| Handle | Polypropylene | Polypropylene |
| Shaft | 1.4305 EN 10088 steel (AISI 303)<br>1.4301 EN 10088 steel (AISI 304) for GRR 12 | Stainless Steel 1.4404 EN 10088 (AISI 316L) |
| Mechanical seal | Alumina-Carbon-NBR | Alumina-Carbon-NBR |
| Seal lubrication oil | Oil for food/pharmaceutical machinery | Oil for food/pharmaceutical machinery |

| Pump type | Power supply cable | | | | Float switch | |
|---|---|---|---|---|---|---|
| | Cable material | Section | length | plug CEI-UNEL 47166 | Cable material | Section |
| GXRM 9 | H05RN-F | 3G0,75 mm2 | 5 m | YES | H07RN-F | 3G1 mm2 |
| GXVM 25-6 | H05RN-F | 3G0,75 mm2 | 5 m | YES | H07RN-F | 3G1 mm2 |
| GXRM 11, 13 | H07RN-F | 3G1 mm2 | 5 m | YES | H07RN-F | 3G1 mm2 |
| GXVM 25-8, 25-10 | H07RN-F | 3G1 mm2 | 5 m | YES | H07RN-F | 3G1 mm2 |
| GXRM 12-10,12,14,16 | H07RN-F | 3G1 mm2 | 10 m | YES | H07RN-F | 3G1 mm2 |
| GXRM 12-18 | H07RN-F | 3G1,5 mm2 | 10 m | YES | H07RN-F | 3G1 mm2 |
| GXRM 12-20 | H07RN-F | 3G2,5 mm2 | 10 m | YES | H07RN-F | 3G1 mm2 |
| GXR 9 | H05RN-F | 4G0,75 mm2 | 5 m | NO | NO | - |
| GXV 25-6 | H05RN-F | 4G0,75 mm2 | 5 m | NO | NO | - |
| GXR 11, 13 | H07RN-F | 4G1 mm2 | 5 m | NO | NO | - |
| GXV 25-8, 25-10 | H07RN-F | 4G1 mm2 | 5 m | NO | NO | - |
| GXR 12 | H07RN-F | 4G1 mm2 | 10 m | NO | NO | - |

# GXR, GXV

calpeda®

## Coverage chart n ≈ 2900 rpm

### Three-phase

| | | | | Q = Flow | | | | | | | | | | |
|---|---|---|---|---|---|---|---|---|---|---|---|---|---|---|
| | | | | m³/h | 0 | 1,2 | 3 | 4,5 | 6 | 7,5 | 9 | 10,2 | 12 | 13,2 |
| Model | 400V | P2 | | l/min | | 20 | 50 | 75 | 100 | 125 | 150 | 170 | 200 | 220 |
| | A | kW | HP | H (m) = Total head | | | | | | | | | | |
| GXR 9 | 0,9 | 0,25 | 0,34 | | 9 | 8,3 | 7 | 6 | 4,8 | 3,6 | 2,5 | 1,7 | - | - |
| GXR 11 | 1,3 | 0,37 | 0,5 | | 11 | 10,4 | 9,5 | 8,5 | 7,5 | 6,5 | 5,3 | 4,2 | 2,2 | - |
| GXR 13 | 1,6 | 0,45 | 0,6 | | 12,7 | 11,7 | 10,7 | 9,7 | 8,5 | 7,3 | 6,3 | 5,2 | 3,2 | 2 |

### Single-phase

| | | | | | | | Q = Flow | | | | | | | | | | |
|---|---|---|---|---|---|---|---|---|---|---|---|---|---|---|---|---|---|
| | | | | | | | m³/h | 0 | 1,2 | 3 | 4,5 | 6 | 7,5 | 9 | 10,2 | 12 | 13,2 |
| Model | 230V | Capacitor | | P2 | | P1 | l/min | | 20 | 50 | 75 | 100 | 125 | 150 | 170 | 200 | 220 |
| | A | Vc | uf | kW | HP | kW | H (m) = Total head | | | | | | | | | | |
| GXRM 9 | 2,5 | 450 | 8 | 0,25 | 0,34 | 0,5 | | 9 | 8,3 | 7 | 6 | 4,8 | 3,6 | 2,5 | 1,7 | - | - |
| GXRM 11 | 3,5 | 450 | 12,5 | 0,37 | 0,5 | 0,7 | | 11 | 10,4 | 9,5 | 8,5 | 7,5 | 6,5 | 5,3 | 4,2 | 2,2 | - |
| GXRM 13 | 4,5 | 450 | 16 | 0,45 | 0,6 | 0,95 | | 12,7 | 11,7 | 10,7 | 9,7 | 8,5 | 7,3 | 6,3 | 5,2 | 3,2 | 2 |

### Three-phase

| | | | | Q = Flow | | | | | | | | | | |
|---|---|---|---|---|---|---|---|---|---|---|---|---|---|---|
| | | | | m³/h | 0 | 1,2 | 3 | 4,5 | 6 | 7,5 | 9 | 10,2 | 12 | 13,2 |
| Model | 400V | P2 | | l/min | | 20 | 50 | 75 | 100 | 125 | 150 | 170 | 200 | 220 |
| | A | kW | HP | H (m) = Total head | | | | | | | | | | |
| GXV 25-6 | 0,9 | 0,25 | 0,34 | | 6 | 5,7 | 5,2 | 4,5 | 3,8 | 3 | 2,2 | 1,5 | - | - |
| GXV 25-8 | 1,3 | 0,37 | 0,5 | | 8,2 | 7,8 | 7,2 | 6,7 | 6,1 | 5,4 | 4,5 | 3,6 | 2,2 | - |
| GXV 25-10 | 1,6 | 0,45 | 0,6 | | 10 | 9,5 | 8,7 | 8 | 7,3 | 6,5 | 5,7 | 4,9 | 3,7 | 2,6 |

### Single-phase

| | | | | | | | Q = Flow | | | | | | | | | | |
|---|---|---|---|---|---|---|---|---|---|---|---|---|---|---|---|---|---|
| | | | | | | | m³/h | 0 | 1,2 | 3 | 4,5 | 6 | 7,5 | 9 | 10,2 | 12 | 13,2 |
| Model | 230V | Capacitor | | P2 | | P1 | l/min | | 20 | 50 | 75 | 100 | 125 | 150 | 170 | 200 | 220 |
| | A | Vc | uf | kW | HP | kW | H (m) = Total head | | | | | | | | | | |
| GXVM 25-6 | 2,5 | 450 | 8 | 0,25 | 0,34 | 0,5 | | 6 | 5,7 | 5,2 | 4,5 | 3,8 | 3 | 2,2 | 1,5 | - | - |
| GXVM 25-8 | 3,5 | 450 | 12,5 | 0,37 | 0,5 | 0,7 | | 8,2 | 7,8 | 7,2 | 6,7 | 6,1 | 5,4 | 4,5 | 3,6 | 2,2 | - |
| GXVM 25-10 | 4,5 | 450 | 16 | 0,45 | 0,6 | 0,95 | | 10 | 9,5 | 8,7 | 8 | 7,3 | 6,5 | 5,7 | 4,9 | 3,7 | 2,6 |

### Three-phase

| | | | | Q = Flow | | | | | | | | | | |
|---|---|---|---|---|---|---|---|---|---|---|---|---|---|---|
| | | | | m³/h | 0 | 1,2 | 3 | 4,5 | 6 | 7,5 | 9 | 10,2 | 12 | 13,2 |
| Model | 400V | P2 | | l/min | | 20 | 50 | 75 | 100 | 125 | 150 | 170 | 200 | 220 |
| | A | kW | HP | H (m) = Total head | | | | | | | | | | |
| GXVL 25-10 | 1,6 | 0,45 | 0,6 | | 10 | 9,5 | 8,7 | 8 | 7,3 | 6,5 | 5,7 | 4,9 | 3,7 | 2,6 |

### Single-phase

| | | | | | | | Q = Flow | | | | | | | | | | |
|---|---|---|---|---|---|---|---|---|---|---|---|---|---|---|---|---|---|
| | | | | | | | m³/h | 0 | 1,2 | 3 | 4,5 | 6 | 7,5 | 9 | 10,2 | 12 | 13,2 |
| Model | 230V | Capacitor | | P2 | | P1 | l/min | | 20 | 50 | 75 | 100 | 125 | 150 | 170 | 200 | 220 |
| | A | Vc | uf | kW | HP | kW | H (m) = Total head | | | | | | | | | | |
| GXVLM 25-10 | 4,5 | 450 | 16 | 0,45 | 0,6 | 0,95 | | 10 | 9,5 | 8,7 | 8 | 7,3 | 6,5 | 5,7 | 4,9 | 3,7 | 2,6 |

**P1:** Maximum power input.
**P2:** Rated motor power output.
Head and power values valid for liquids with density ρ = 1,0 kg/dm3 and kinematic viscosity ν = max 20 mm2/sec. Total head in m

# GXR, GXV

## Coverage chart n ≈ 2900 rpm

### Three-phase

| | | | | Q = Flow | | | | | | | | | | | |
|---|---|---|---|---|---|---|---|---|---|---|---|---|---|---|---|
| | | | | m³/h | 0 | 3 | 6 | 9 | 12 | 15 | 18 | 21 | 24 | 27 | 30 |
| Model | 400V | P2 | | l/min | | 50 | 100 | 150 | 200 | 250 | 300 | 350 | 400 | 450 | 500 |
| | A | kW | HP | H (m) = Total head | | | | | | | | | | | |
| GXR 12-10 | 1,5 | 0,45 | 0,6 | | 9,3 | 9 | 8,3 | 7,5 | 6,3 | 5 | 3,3 | - | - | - | - |
| GXR 12-12 | 1,9 | 0,55 | 0,75 | | 12 | 11,3 | 10,6 | 9,6 | 8,5 | 7,2 | 5,6 | 3,7 | - | - | - |
| GXR 12-14 | 2,2 | 0,75 | 1 | | 13,5 | 13 | 12,2 | 11,4 | 10,4 | 9 | 7,5 | 5,6 | 3,3 | - | - |
| GXR 12-16 | 2,8 | 0,9 | 1,2 | | 15,5 | 14,7 | 14 | 13,2 | 12,2 | 11 | 9,4 | 7,5 | 5,4 | 3,2 | - |
| GXR 12-18 | 3,3 | 1,1 | 1,5 | | 17 | 16,3 | 15,5 | 14,6 | 13,5 | 12,3 | 10,8 | 9,2 | 7,3 | 5,2 | 3 |
| GXR 12-20 | 4 | 1,5 | 2 | | 19,2 | 18,4 | 17,5 | 16,5 | 15,5 | 14,2 | 12,8 | 11,2 | 9,3 | 7,2 | 4,7 |

### Single-phase

| | | | | | | | Q = Flow | | | | | | | | | | | |
|---|---|---|---|---|---|---|---|---|---|---|---|---|---|---|---|---|---|---|
| | | | | | | | m³/h | 0 | 3 | 6 | 9 | 12 | 15 | 18 | 21 | 24 | 27 | 30 |
| Model | 230V | Capacitor | | P2 | | P1 | l/min | | 50 | 100 | 150 | 200 | 250 | 300 | 350 | 400 | 450 | 500 |
| | A | Vc | uf | kW | HP | kW | H (m) = Total head | | | | | | | | | | | |
| GXRM 12-10 | 4 | 450 | 12,5 | 0,45 | 0,6 | 0,85 | | 9,3 | 9 | 8,3 | 7,5 | 6,3 | 5 | 3,3 | - | - | - | - |
| GXRM 12-12 | 5,2 | 450 | 16 | 0,55 | 0,75 | 1,1 | | 12 | 11,3 | 10,6 | 9,6 | 8,5 | 7,2 | 5,6 | 3,7 | - | - | - |
| GXRM 12-14 | 6 | 450 | 20 | 0,75 | 1 | 1,3 | | 13,5 | 13 | 12,2 | 11,4 | 10,4 | 9 | 7,5 | 5,6 | 3,3 | - | - |
| GXRM 12-16 | 7,4 | 450 | 25 | 0,9 | 1,2 | 1,6 | | 15,5 | 14,7 | 14 | 13,2 | 12,2 | 11 | 9,4 | 7,5 | 5,4 | 3,2 | - |
| GXRM 12-18 | 9,5 | 450 | 30 | 1,1 | 1,5 | 2 | | 17 | 16,3 | 15,5 | 14,6 | 13,5 | 12,3 | 10,8 | 9,2 | 7,3 | 5,2 | 3 |
| GXRM 12-20 | 13 | 450 | 35 | 1,5 | 2 | 2,2 | | 19,2 | 18,4 | 17,5 | 16,5 | 15,5 | 14,2 | 12,8 | 11,2 | 9,3 | 7,2 | 4,7 |

**P1:** Maximum power input.
**P2:** Rated motor power output.
Head and power values valid for liquids with density ρ = 1,0 kg/dm3 and kinematic viscosity ν = max 20 mm2/sec. Total head in m

# GXR, GXV

## Dimensions and weights

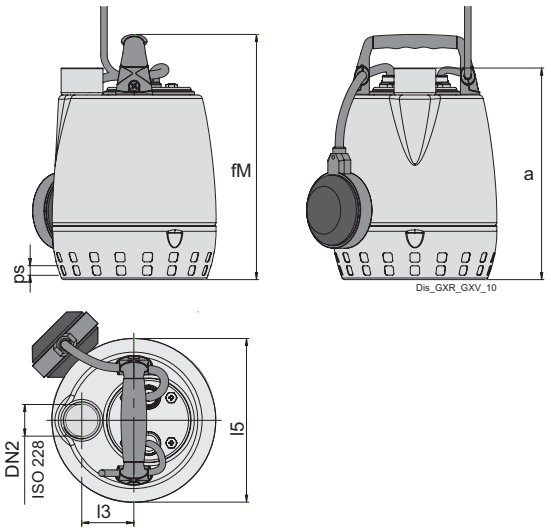


| TYPE | ISO 228 | mm | | | | | kg |
|---|---|---|---|---|---|---|---|
| | DN2 | a | fM | l5 | l5 | ps | Weight |
| GXR 9 | G 1 1/4 | 230 | 265 | 56 | 176 | 10 | 5.2 |
| GXR 11 | G 1 1/4 | 265 | 300 | 56 | 176 | 10 | 6.5 |
| GXR 13 | G 1 1/4 | 265 | 300 | 56 | 176 | 10 | 7.2 |

| TYPE | ISO 228 | mm | | | | | kg |
|---|---|---|---|---|---|---|---|
| | DN2 | a | fM | l5 | l5 | ps | Weight |
| GXRM 9 | G 1 1/4 | 230 | 265 | 56 | 176 | 10 | 5.3 |
| GXRM 11 | G 1 1/4 | 265 | 300 | 56 | 176 | 10 | 6.5 |
| GXRM 13 | G 1 1/4 | 265 | 300 | 56 | 176 | 10 | 7.2 |

**weights** with cable length: 5 m

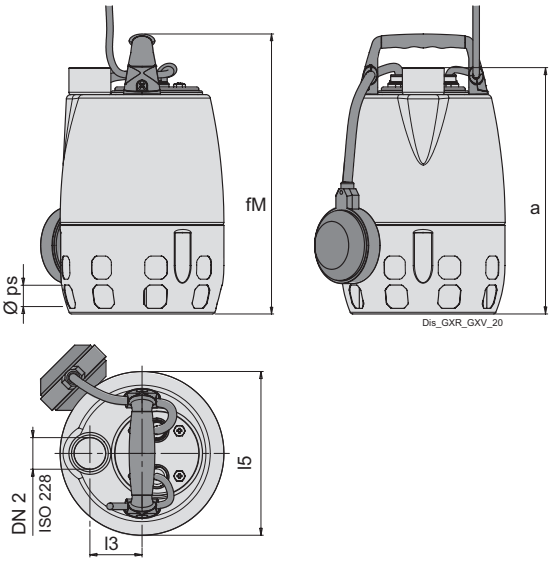


| TYPE | ISO 228 | mm | | | | | kg |
|---|---|---|---|---|---|---|---|
| | DN2 | a | fM | l5 | l5 | ps | Weight |
| GXV 25-6 | G1 1/4 | 267 | 302 | 56 | 176 | 25 | 5.3 |
| GXV 25-8 | G1 1/4 | 302 | 337 | 56 | 176 | 25 | 6.6 |
| GXV 25-10 | G1 1/4 | 302 | 337 | 56 | 176 | 25 | 7.3 |
| GXVL 25-10 | G1 1/4 | 302 | 337 | 56 | 176 | 25 | 7 |

| TYPE | ISO 228 | mm | | | | | kg |
|---|---|---|---|---|---|---|---|
| | DN2 | a | fM | l5 | l5 | ps | Weight |
| GXVM 25-6 | G1 1/4 | 267 | 302 | 56 | 176 | 25 | 5.3 |
| GXVM 25-8 | G1 1/4 | 302 | 337 | 56 | 176 | 25 | 6.8 |
| GXVM 25-10 | G1 1/4 | 302 | 337 | 56 | 176 | 25 | 7.3 |
| GXVLM 25-10 | G1 1/4 | 302 | 337 | 56 | 176 | 25 | 7 |

**weights** with cable length: 5 m

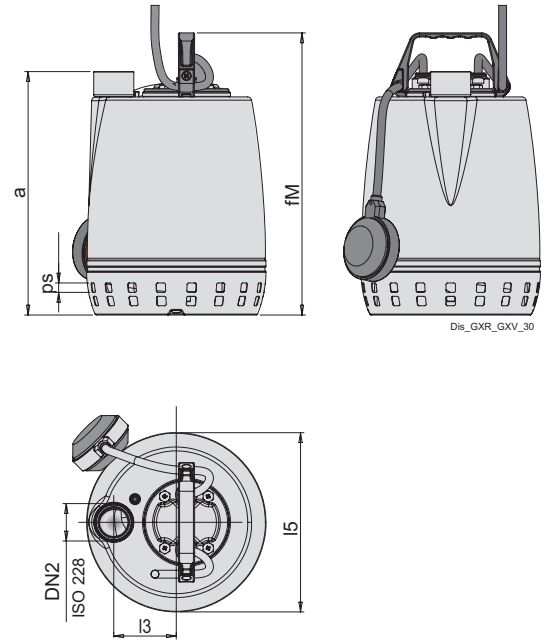


| TYPE | ISO 228 | mm | | | | | kg |
|---|---|---|---|---|---|---|---|
| | DN2 | a | fM | l5 | l5 | ps | Weight |
| GXR 12-10 | G 1 1/2 | 310 | 360 | 80 | 228 | 12 | 10.3 |
| GXR 12-12 | G 1 1/2 | 325 | 375 | 80 | 228 | 12 | 11.4 |
| GXR 12-14 | G 1 1/2 | 350 | 400 | 80 | 228 | 12 | 12.5 |
| GXR 12-16 | G 1 1/2 | 350 | 400 | 80 | 228 | 12 | 12.6 |
| GXR 12-18 | G 1 1/2 | 370 | 420 | 80 | 228 | 12 | 14.3 |
| GXR 12-20 | G 1 1/2 | 400 | 450 | 80 | 228 | 12 | 15.5 |

| TYPE | ISO 228 | mm | | | | | kg |
|---|---|---|---|---|---|---|---|
| | DN2 | a | fM | l5 | l5 | ps | Weight |
| GXRM 12-10 | G 1 1/2 | 310 | 360 | 80 | 228 | 12 | 11.3 |
| GXRM 12-12 | G 1 1/2 | 325 | 375 | 80 | 228 | 12 | 12.5 |
| GXRM 12-14 | G 1 1/2 | 350 | 400 | 80 | 228 | 12 | 13.7 |
| GXRM 12-16 | G 1 1/2 | 350 | 400 | 80 | 228 | 12 | 14.5 |
| GXRM 12-18 | G 1 1/2 | 370 | 420 | 80 | 228 | 12 | 16.4 |
| GXRM 12-20 | G 1 1/2 | 400 | 450 | 80 | 228 | 12 | 19 |

**weights** With cable length: 10 m

# GXR, GXV

## Examples of installations

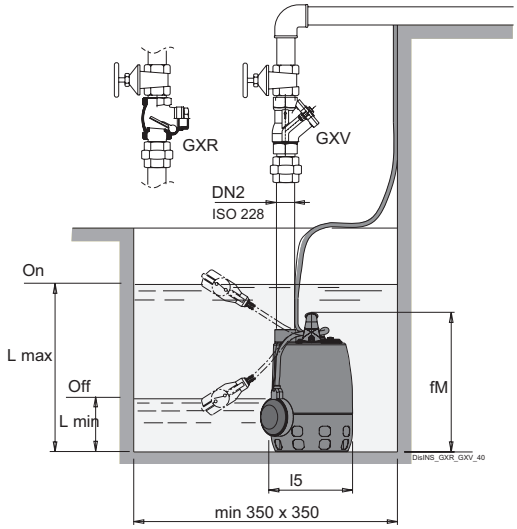


| TYPE | ISO 228 | mm | | | | kg |
|---|---|---|---|---|---|---|
| | DN2 | fM | l5 | Lmax | Lmin | Weight |
| GXRM 9 | G 1 1/4 | 265 | 176 | 340 | 70 | 5.3 |
| GXRM 11 | G 1 1/4 | 300 | 176 | 340 | 70 | 6.5 |
| GXRM 13 | G 1 1/4 | 300 | 176 | 340 | 70 | 7.2 |

| TYPE | ISO 228 | mm | | | | kg |
|---|---|---|---|---|---|---|
| | DN2 | fM | l5 | Lmax | Lmin | Weight |
| GXVM 25-6 | G1 1/4 | 302 | 176 | 375 | 130 | 5.3 |
| GXVM 25-8 | G1 1/4 | 337 | 176 | 375 | 130 | 6.8 |
| GXVM 25-10 | G1 1/4 | 337 | 176 | 375 | 130 | 7.3 |
| GXVLM 25-10 | G1 1/4 | 337 | 176 | 375 | 130 | 7 |

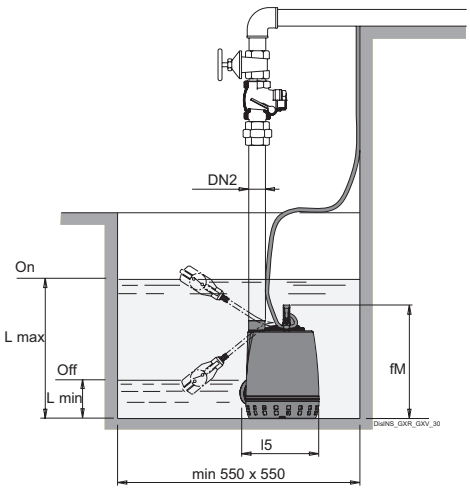


| TYPE | ISO 228 | mm | | | | kg |
|---|---|---|---|---|---|---|
| | DN2 | fM | l5 | Lmin | ps | Weight |
| GXRM 12-10 | G 1 1/2 | 360 | 228 | 175 | 12 | 11.3 |
| GXRM 12-12 | G 1 1/2 | 375 | 228 | 190 | 12 | 12.5 |
| GXRM 12-14 | G 1 1/2 | 400 | 228 | 215 | 12 | 13.7 |
| GXRM 12-16 | G 1 1/2 | 400 | 228 | 215 | 12 | 14.5 |
| GXRM 12-18 | G 1 1/2 | 420 | 228 | 235 | 12 | 16.4 |
| GXRM 12-20 | G 1 1/2 | 450 | 228 | 265 | 12 | 19 |

## Installation examples with vertical magnetic float switch

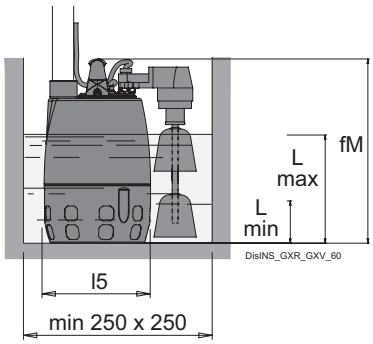


| TYPE | | mm | | | | kg |
|---|---|---|---|---|---|---|
| | DN2 | fM | l5 | Lmax | Lmin | Weight |
| GXVM 25-6 GFA | G1 1/4 | 302 | 176 | 150 | 70 | 5.3 |
| GXVM 25-8 GFA | G1 1/4 | 337 | 176 | 185 | 70 | 6.6 |
| GXVM 25-10 GFA | G1 1/4 | 337 | 176 | 185 | 70 | 7.3 |

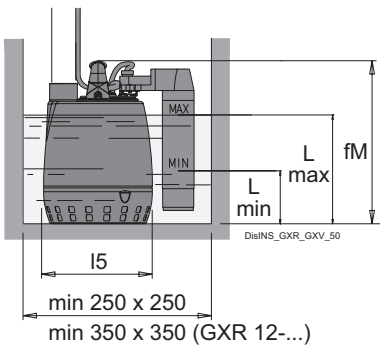


| TYPE | | mm | | | | kg |
|---|---|---|---|---|---|---|
| | DN2 | fM | l5 | Lmax | Lmin | Weight |
| GXRM 9 GF | G 1 1/4 | 265 | 176 | 190 | 100 | 5.5 |
| GXRM 11 GF | G 1 1/4 | 300 | 176 | 225 | 135 | 6.9 |
| GXRM 13 GF | G 1 1/4 | 300 | 176 | 225 | 135 | 7.4 |
| GXRM 12-10 GF | G 1 1/2 | 360 | 228 | 180 | 270 | 11.5 |
| GXRM 12-12 GF | G 1 1/2 | 375 | 228 | 195 | 285 | 12.6 |
| GXRM 12-14 GF | G 1 1/2 | 400 | 228 | 220 | 310 | 13.9 |
| GXRM 12-16 GF | G 1 1/2 | 400 | 228 | 220 | 310 | 15.3 |

# GX ZERO

**Coverage chart n ≈ 2900 rpm**

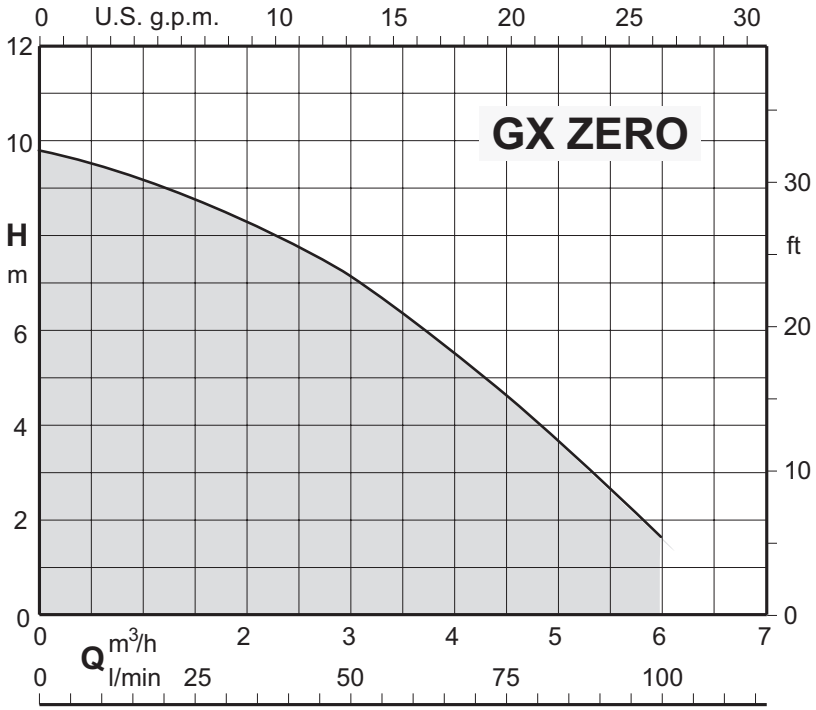


# Submersible clean water pumps

# GX ZERO

## Construction

Single-impeller submersible pumps in chrome-nickel stainless steel, with vertical delivery port and suction non-return valve.
Suction capability up to 1 mm from the bottom.
Motor cooled by the pumped water passing between the motor jacket and the external jacket.
Double shaft seal with oil chamber.
The pump is equipped with a suction non-return valve, which allows for manual relocation of the pump to various points within the room during operation. This feature ensures the pump can draw water down to 1 mm without losing its prime.

## Applications

For clean water containing solids up to 3 mm grain size.
Draining flooded rooms or tanks.
Water extraction from ponds, flowing streams, or pits for rainwater collection.

## Operating conditions

Liquid temperature up to 35° C.
Maximum immersion depth: 5 m.
Minimum manual emptying level 1 mm.
Continuous duty.

## Motor

2-pole induction motor, 50 Hz (n ≈ 2900 rpm).
**GX ZERO:** three-phase 230 V ± 10%;
400V ± 10%;
H05RN-F cable, 4G0.75 mm2, length 10 m, without plug.
**GXM ZERO:** single-phase 230 V ± 10%,
with thermal protector.
Incorporated capacitor.
H05RN-F cable, 3G0.75 mm2, length 10 m, with CEI-UNEL 47166 plug.
Insulation class F.
Protection IP X8 (for continuous immersion)
Double impregnation humidity-proof dry winding.
Constructed in accordance with EN 60034-1.

## Special features on request

Other voltages.
Frequency 60 Hz (as per 60 Hz data sheet).
Other mechanical seal.
Motor suitable for operation with frequency converter.

## Designation

Example: GXM ZERO
GX = Series
M = Single-phase (without three-phase indication)
ZERO = Pump type

## Materials

| Components | Materials |
|---|---|
| Pump casing | PA66-50FV (Noryl) |
| Filter | Polypropylene |
| Impeller | PPO-GF20 (Noryl) |
| valve | NBR / Chrome-nickel steel AISI 304 |
| motor jacket | Chrome-nickel steel 1.4301 EN 10088 (AISI 304) |
| Pump jacket | Chrome-nickel steel 1.4301 EN 10088 (AISI 304) |
| Handle | Polypropylene |
| Shaft | Chrome-nickel steel 1.4305 EN 10088 (AISI 303) |
| Mechanical seal | Alumina-Carbon-NBR |
| Seal lubrication oil | Oil for food/pharmaceutical machinery |

# GX ZERO

## Coverage chart n ≈ 2900 rpm

### Three-phase

| | | | | Q = Flow | | | | | | |
|---|---|---|---|---|---|---|---|---|---|---|
| | | | | m³/h | 0 | 1,2 | 2,25 | 3 | 4,5 | 6 |
| Model | 400V | P2 | | l/min | | 20 | 37,5 | 50 | 75 | 100 |
| | A | kW | HP | H (m) = Total head | | | | | | |
| GX ZERO | 0,9 | 0,25 | 0,34 | | 9,8 | 9 | 8,1 | 7,1 | 4,5 | 1,6 |

### Single-phase

| | | | | | | | Q = Flow | | | | | | |
|---|---|---|---|---|---|---|---|---|---|---|---|---|---|
| | | | | | | | m³/h | 0 | 1,2 | 2,25 | 3 | 4,5 | 6 |
| Model | 230V | Capacitor | | P2 | | P1 | l/min | | 20 | 37,5 | 50 | 75 | 100 |
| | A | Vc | uf | kW | HP | kW | H (m) = Total head | | | | | | |
| GXM ZERO | 2,5 | 450 | 8 | 0,25 | 0,34 | 0,5 | | 9,8 | 9 | 8,1 | 7,1 | 4,5 | 1,6 |

**P1:** Maximum power input.
**P2:** Rated motor power output.
**Head and power values valid for liquids with density ρ = 1,0 kg/dm3 and kinematic viscosity v = max 20 mm2/sec.** Total head in m

## Dimensions and weights

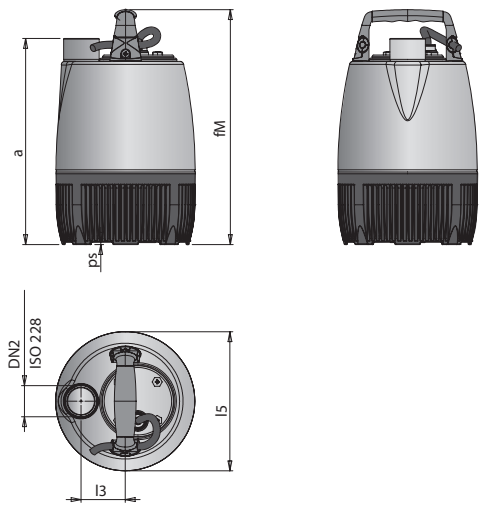


## Examples of installations

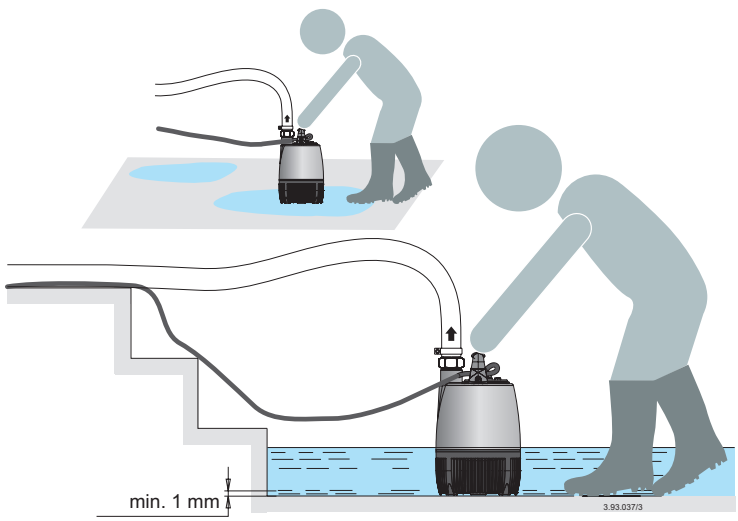


| TYPE | ISO 228 | mm | | | | | kg |
|---|---|---|---|---|---|---|---|
| | DN2 | a | fM | l5 | l5 | ps | Weight |
| GXM ZERO | G 1 1/4 | 261 | 297 | 56 | 176 | 3 | 5.4 |

**weights** With cable length: 10 m

# GQR

(patented system)

**Coverage chart n ≈ 2900 rpm**

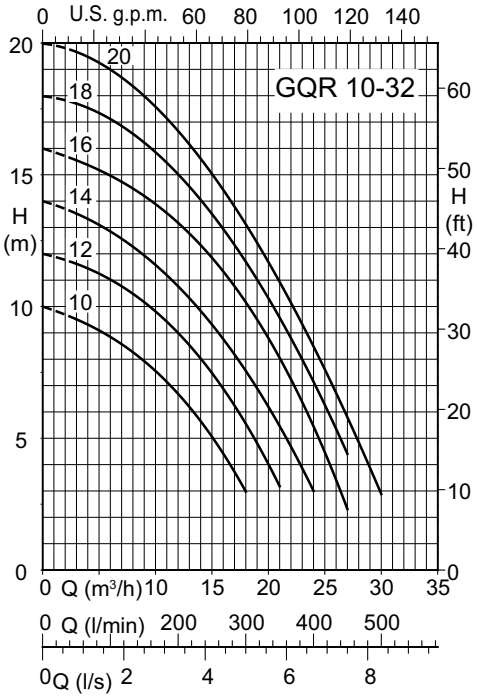


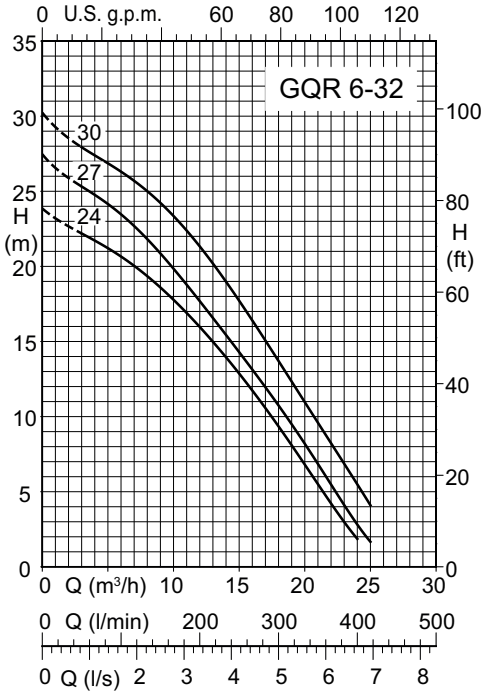


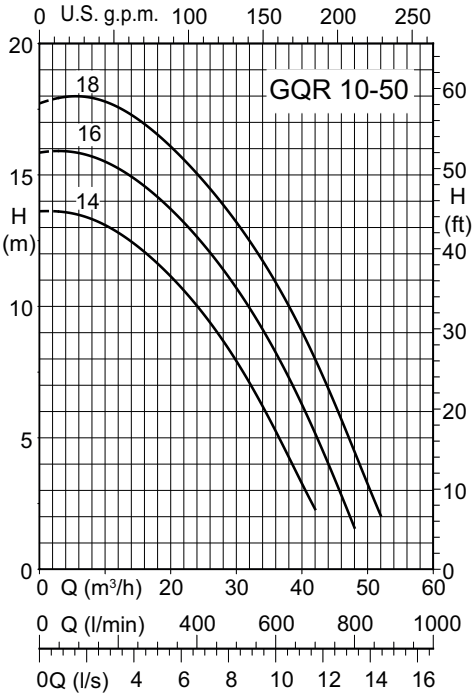


# Submersible drainage pumps

# GQR

## Construction

Single-impeller submersible drainage pump, with open impeller.
**GQR:** with threaded vertical delivery port (G1 1/2).
**GQR 10 32:** with horizontal flanged and threaded delivery port (DN 32, PN 6 - G 1 1/2).
**GQR 10 50:** with horizontal flanged and threaded delivery port (DN 50, PN 10 - G 2).
Double mechanical shaft seal with interposed oil chamber, to protect against dry-running.

## Applications

For clean water with suspended solids up to a diameter of 6, 10 mm.
Emptying of flooded rooms or tanks.
Extraction of water from ponds, flowing water or pits for collection of rain water.
For irrigation purposes.

## Operating conditions

Liquid temperature up to 35° C.
Maximum immersion depth: 5 m.
Continuous duty (with submerged motor).

## Motor

2-pole induction motor, 50Hz (n ≈ 2900 1/min).
GQR: three-phase 230V ± 10%
400V ± 10%
Cable: H07RN-F, 4G1 mm2, length 10 m, without plug.
GQRM: single-phase 230V ± 10%
with float switch and thermal protector.
Incorporated capacitor
Cable: H07RN-F, 3G1 mm² (3G1x1,5 mm² for 1.5 kW), length 10 m, with plug CEI-UNEL 47166.
Insulation class F.
Protection IP X8 (for continuous immersion).
Triple impregnation humidity-proof dry winding
- Constructed in accordance with EN 60034-1
EN 60335-1, EN 60335-2-41.

## Special features on request

Other voltages.
Frequency 60 Hz (as per 60 Hz data sheet).
Other mechanical seal.
Cable length 20 m.
With switch and fixed float (magnetic).
Motor set up for operation with inverter.
Three-phase pumps with built-in switch and float.

## Designation

**GQRM 10 32-12**
**GQ** = Series
**R** = with open impeller.
**M** = Single-phase (no indication: three-phase)
**10** = Free passage
**32** = Delivery port diameter in mm (value for flanged pumps only)
**12** = Max. head

## Materials

| Components | Materials |
|---|---|
| Pump casing | Cast iron GJL 200 EN 1561 |
| Impeller | Cast iron GJL 200 EN 1561 |
| Filter | Chrome-nickel steel 1.4301 EN 10088 (AISI 304) |
| motor jacket | Chrome-nickel steel 1.4301 EN 10088 (AISI 304) |
| Jacket cover | Chrome-nickel steel 1.4301 EN 10088 (AISI 304) |
| Casing cover | Chrome-nickel steel 1.4301 EN 10088 (AISI 304) |
| Handle | Polypropylene (with frame made of 1.4301 EN 10088 (AISI 304) |
| Shaft | Chrome-nickel steel 1.4301 EN 10088 (AISI 304) for GQR 6-32.. (AISI 303) |
| Upper mechanical seal | Ceramic / Carbon / NBR |
| Lower mechanical seal | Ceramic / Carbon / NBR |
| Seal lubrication oil | Oil for food/pharmaceutical machinery |

# GQR

calpeda

## Coverage chart n ≈ 2900 rpm

### Three-phase

| | | | | Q = Flow | | | | | | | | | | | |
|---|---|---|---|---|---|---|---|---|---|---|---|---|---|---|---|
| | | | | m³/h | 0 | 3 | 6 | 9 | 12 | 15 | 18 | 21 | 24 | 27 | 30 |
| Model | 400V | P2 | | l/min | | 50 | 100 | 150 | 200 | 250 | 300 | 350 | 400 | 450 | 500 |
| | A | kW | HP | H (m) = Total head | | | | | | | | | | | |
| GQR 10-10 | 1,2 | 0,45 | 0,6 | | 10 | 9,5 | 8,8 | 8 | 6,7 | 5 | 3 | - | - | - | - |
| GQR 10-12 | 1,4 | 0,55 | 0,75 | | 12 | 11,6 | 11 | 10,2 | 9 | 7,5 | 5,5 | 3,2 | - | - | - |
| GQR 10-14 | 1,6 | 0,75 | 1 | | 14 | 13,5 | 12,8 | 12 | 10,8 | 9,3 | 7,5 | 5,5 | 3 | - | - |
| GQR 10-16 | 2,3 | 0,9 | 1,2 | | 16 | 15,5 | 15 | 14,2 | 13,2 | 11,8 | 10,2 | 8 | 5,5 | 2,3 | - |
| GQR 10-18 | 2,8 | 1,1 | 1,5 | | 18 | 17,5 | 17 | 16,2 | 15 | 13,7 | 11,8 | 9,4 | 7 | 4,3 | - |
| GQR 10-20 | 3,8 | 1,5 | 2 | | 20 | 19,5 | 18,8 | 18 | 16,8 | 15,2 | 13,2 | 10,8 | 8,4 | 5,7 | 3 |

### Single-phase

| | | | | | | | Q = Flow | | | | | | | | | | | |
|---|---|---|---|---|---|---|---|---|---|---|---|---|---|---|---|---|---|---|
| | | | | | | | m³/h | 0 | 3 | 6 | 9 | 12 | 15 | 18 | 21 | 24 | 27 | 30 |
| Model | 230V | Capacitor | | P2 | | P1 | l/min | | 50 | 100 | 150 | 200 | 250 | 300 | 350 | 400 | 450 | 500 |
| | A | Vc | uf | kW | HP | kW | H (m) = Total head | | | | | | | | | | | |
| GQRM 10-10 | 3,1 | 450 | 12,5 | 0,45 | 0,6 | 0,7 | | 10 | 9,5 | 8,8 | 8 | 6,7 | 5 | 3 | - | - | - | - |
| GQRM 10-12 | 3,6 | 450 | 16 | 0,55 | 0,75 | 1 | | 12 | 11,6 | 11 | 10,2 | 9 | 7,5 | 5,5 | 3,2 | - | - | - |
| GQRM 10-14 | 4,5 | 450 | 16 | 0,75 | 1 | 1 | | 14 | 13,5 | 12,8 | 12 | 10,8 | 9,3 | 7,5 | 5,5 | 3 | - | - |
| GQRM 10-16 | 6 | 450 | 25 | 0,9 | 1,2 | 1,3 | | 16 | 15,5 | 15 | 14,2 | 13,2 | 11,8 | 10,2 | 8 | 5,5 | 2,3 | - |
| GQRM 10-18 | 8 | 450 | 30 | 1,1 | 1,5 | 1,7 | | 18 | 17,5 | 17 | 16,2 | 15 | 13,7 | 11,8 | 9,4 | 7 | 4,3 | - |
| GQRM 10-20 | 13 | 450 | 35 | 1,5 | 2 | 2,2 | | 20 | 19,5 | 18,8 | 18 | 16,8 | 15,2 | 13,2 | 10,8 | 8,4 | 5,7 | 3 |

### Three-phase

| | | | | Q = Flow | | | | | | | | | | | | | | | | |
|---|---|---|---|---|---|---|---|---|---|---|---|---|---|---|---|---|---|---|---|---|
| | | | | m³/h | 0 | 3 | 6 | 9 | 12 | 15 | 18 | 21 | 24 | 25 | 27 | 30 | 36 | 42 | 48 | 52 |
| Model | 400V | P2 | | l/min | | 50 | 100 | 150 | 200 | 250 | 300 | 350 | 400 | 416 | 450 | 500 | 600 | 700 | 800 | 867 |
| | A | kW | HP | H (m) = Total head | | | | | | | | | | | | | | | | |
| GQR 10-32-10 | 1,2 | 0,45 | 0,6 | | 10 | 9,5 | 8,8 | 8 | 6,7 | 5 | 3 | - | - | - | - | - | - | - | - | - |
| GQR 10-32-12 | 1,4 | 0,55 | 0,75 | | 12 | 11,6 | 11 | 10,2 | 9 | 7,5 | 5,5 | 3,2 | - | - | - | - | - | - | - | - |
| GQR 10-32-14 | 1,6 | 0,75 | 1 | | 14 | 13,5 | 12,8 | 12 | 10,8 | 9,3 | 7,5 | 5,5 | 3 | - | - | - | - | - | - | - |
| GQR 10-32-16 | 2,3 | 0,9 | 1,2 | | 16 | 15,5 | 15 | 14,2 | 13,2 | 11,8 | 10,2 | 8 | 5,5 | 4,5 | 2,3 | - | - | - | - | - |
| GQR 10-32-18 | 2,8 | 1,1 | 1,5 | | 18 | 17,5 | 17 | 16,2 | 15 | 13,7 | 11,8 | 9,4 | 7 | 6,1 | 4,3 | - | - | - | - | - |
| GQR 10-32-20 | 3,8 | 1,5 | 2 | | 20 | 19,5 | 18,8 | 18 | 16,8 | 15,2 | 13,2 | 10,8 | 8,4 | 7,5 | 5,7 | 3 | - | - | - | - |
| GQR 6-32-24 | 3.8 | 1,1 | 1,5 | | 23,9 | 22,2 | 20,7 | 18,6 | 16 | 12,9 | 9,4 | 5,5 | 1,9 | - | - | - | - | - | - | - |
| GQR 6-32-27 | 4.5 | 1.5 | 2 | | 27,1 | 25,3 | 23,5 | 20,9 | 17,7 | 14,3 | 10,7 | 6,9 | 2,8 | 1,7 | - | - | - | - | - | - |
| GQR 6-32-30 | 5,6 | 1.8 | 2.5 | | 30,2 | 27,9 | 26,3 | 24,2 | 21,3 | 17,7 | 13,7 | 9,6 | 5,5 | 4,1 | - | - | - | - | - | - |
| GQR 10-50-14 | 3 | 1,1 | 1,5 | | 13,7 | 13,6 | 13,5 | 13,2 | 12,8 | 12,3 | 11,6 | 10,9 | 10 | 9,7 | 9 | 7,9 | 5,3 | 2,3 | - | - |
| GQR 10-50-16 | 4.5 | 1,5 | 2 | | 15,8 | 15,9 | 15,8 | 15,6 | 15,3 | 14,8 | 14,2 | 13,5 | 12,6 | 12,4 | 11,7 | 10,7 | 8,2 | 5,2 | 1,6 | - |
| GQR 10-50-18 | 5 | 2 | 2,7 | | 17,7 | 17,9 | 18 | 17,9 | 17,6 | 17,1 | 16,5 | 15,8 | 15,1 | 14,8 | 14,2 | 13,2 | 10,9 | 8 | 4,5 | 2 |

### Single-phase

| | | | | | | | Q = Flow | | | | | | | | | | | | | | | |
|---|---|---|---|---|---|---|---|---|---|---|---|---|---|---|---|---|---|---|---|---|---|---|
| | | | | | | | m³/h | 0 | 3 | 6 | 9 | 12 | 15 | 18 | 21 | 24 | 25 | 27 | 30 | 36 | 42 | 48 |
| Model | 230V | Capacitor | | P2 | | P1 | l/min | | 50 | 100 | 150 | 200 | 250 | 300 | 350 | 400 | 417 | 450 | 500 | 600 | 700 | 800 |
| | A | Vc | uf | kW | HP | kW | H (m) = Total head | | | | | | | | | | | | | | | |
| GQRM 10-32-10 | 3,1 | 450 | 12,5 | 0,45 | 0,6 | 0,7 | | 10 | 9,5 | 8,8 | 8 | 6,7 | 5 | 3 | - | - | - | - | - | - | - | - |
| GQRM 10-32-12 | 3,6 | 450 | 16 | 0,55 | 0,75 | 1 | | 12 | 11,6 | 11 | 10,2 | 9 | 7,5 | 5,5 | 3,2 | - | - | - | - | - | - | - |
| GQRM 10-32-14 | 4,5 | 450 | 16 | 0,75 | 1 | 1 | | 14 | 13,5 | 12,8 | 12 | 10,8 | 9,3 | 7,5 | 5,5 | 3 | - | - | - | - | - | - |
| GQRM 10-32-16 | 6 | 450 | 25 | 0,9 | 1,2 | 1,3 | | 16 | 15,5 | 15 | 14,2 | 13,2 | 11,8 | 10,2 | 8 | 5,5 | 4,5 | 2,3 | - | - | - | - |
| GQRM 10-32-18 | 8 | 450 | 30 | 1,1 | 1,5 | 1,7 | | 18 | 17,5 | 17 | 16,2 | 15 | 13,7 | 11,8 | 9,4 | 7 | 6,1 | 4,3 | - | - | - | - |
| GQRM 10-32-20 | 12 | 450 | 35 | 1,5 | 2 | 2,2 | | 20 | 19,5 | 18,8 | 18 | 16,8 | 15,2 | 13,2 | 10,8 | 8,4 | 7,5 | 5,7 | 3 | - | - | - |
| GQRM 6-32-24 | 9.5 | 450 | 30 | 1,1 | 1,5 | 1,84 | | 23,9 | 22,2 | 20,7 | 18,6 | 16 | 12,9 | 9,4 | 5,5 | 1,9 | - | - | - | - | - | - |
| GQRM 6-32-27 | 12 | 450 | 35 | 1.5 | 2 | 2,3 | | 27,1 | 25,3 | 23,5 | 20,9 | 17,7 | 14,3 | 10,7 | 6,9 | 2,8 | 1,7 | - | - | - | - | - |
| GQRM 10-50-14 | 8 | 450 | 30 | 1,1 | 1,5 | 2 | | 13,7 | 13,6 | 13,5 | 13,2 | 12,8 | 12,3 | 11,6 | 10,9 | 10 | 9,7 | 9 | 7,9 | 5,3 | 2,3 | - |
| GQRM 10-50-16 | 13 | 450 | 35 | 1,5 | 2 | 2,4 | | 15,8 | 15,9 | 15,8 | 15,6 | 15,3 | 14,8 | 14,2 | 13,5 | 12,6 | 12,4 | 11,7 | 10,7 | 8,2 | 5,2 | 1,6 |

**P1:** Maximum power input.
**P2:** Rated motor power output.
**Head and power values valid for liquids with density ρ = 1,0 kg/dm3 and kinematic viscosity ν = max 20 mm2/sec.** Total head in m

## Dimensions and weights

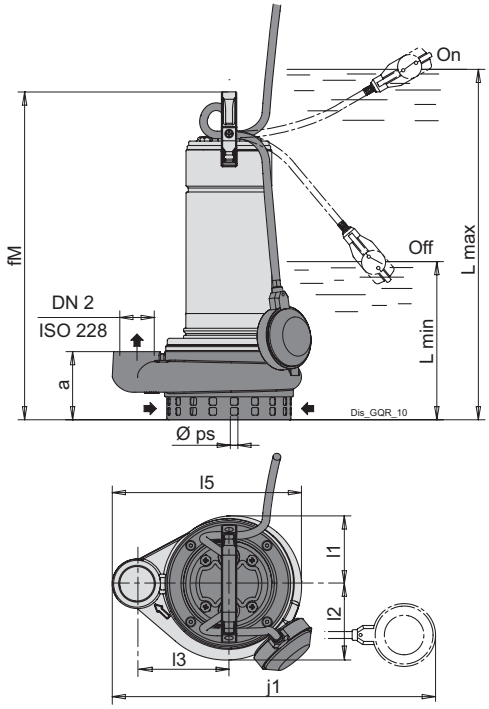


| TYPE | ISO 228 | mm | | | | | | | | kg |
|---|---|---|---|---|---|---|---|---|---|---|
| | DN2 | a | fM | l1 | l2 | l5 | l5 | Lmin | ps | Weight |
| GQR 10-10 | G1 1/2 | 90 | 390 | 89 | 100 | 120 | 247 | 205 | 10 | 12.8 |
| GQR 10-12 | G1 1/2 | 90 | 405 | 89 | 100 | 120 | 247 | 220 | 10 | 14.3 |
| GQR 10-14 | G1 1/2 | 90 | 405 | 89 | 100 | 120 | 247 | 220 | 10 | 14.3 |
| GQR 10-16 | G1 1/2 | 90 | 430 | 89 | 100 | 120 | 247 | 245 | 10 | 16 |
| GQR 10-18 | G1 1/2 | 90 | 450 | 89 | 100 | 120 | 247 | 265 | 10 | 17.5 |
| GQR 10-20 | G1 1/2 | 90 | 450 | 89 | 100 | 120 | 247 | 265 | 10 | 18.3 |

**L min:** = Minimum immersion depth

| TYPE | ISO 228 | mm | | | | | | | | | | kg |
|---|---|---|---|---|---|---|---|---|---|---|---|---|
| | DN2 | a | fM | j1 | l1 | l2 | l5 | l5 | Lmax | Lmin | ps | Weight |
| GQRM 10-10 | G1 1/2 | 90 | 390 | 430 | 89 | 100 | 120 | 247 | 410 | 205 | 10 | 13.8 |
| GQRM 10-12 | G1 1/2 | 90 | 405 | 430 | 89 | 100 | 120 | 247 | 425 | 220 | 10 | 15.5 |
| GQRM 10-14 | G1 1/2 | 90 | 430 | 430 | 89 | 100 | 120 | 247 | 425 | 220 | 10 | 15.5 |
| GQRM 10-16 | G1 1/2 | 90 | 430 | 430 | 89 | 100 | 120 | 247 | 450 | 245 | 10 | 17 |
| GQRM 10-18 | G1 1/2 | 90 | 450 | 430 | 89 | 100 | 120 | 247 | 470 | 265 | 10 | 19 |
| GQRM 10-20 | G1 1/2 | 90 | 480 | 430 | 89 | 100 | 120 | 247 | 500 | 295 | 10 | 20.3 |

**weights** With cable length: 10 m

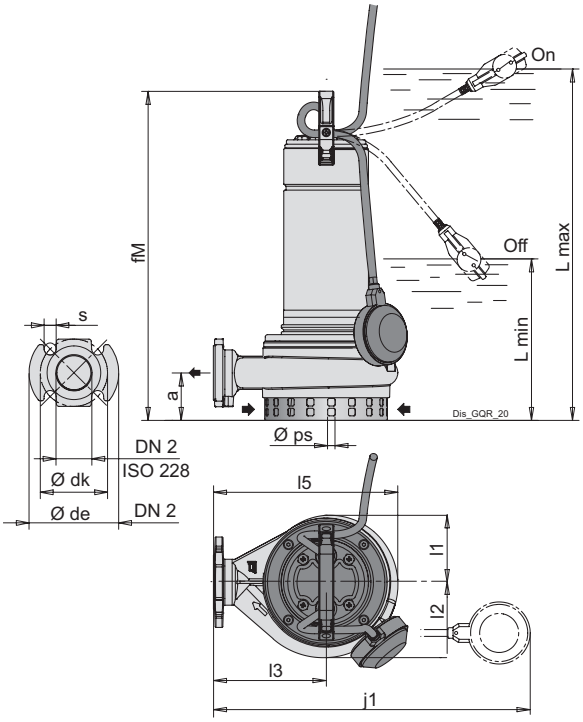


| TYPE | | mm | | | | | | | | | | | kg |
|---|---|---|---|---|---|---|---|---|---|---|---|---|---|
| | DN2 | a | de | dk | fM | l1 | l2 | l5 | l5 | Lmin | ps | s | Weight |
| GQR 10-32-10 | G1 1/2 (DN32 PN6) | 62 | 120 | 90 | 395 | 89 | 100 | 150 | 245 | 210 | 10 | 16 | 13.4 |
| GQR 10-32-12 | G1 1/2 (DN32 PN6) | 62 | 120 | 90 | 410 | 89 | 100 | 150 | 245 | 225 | 10 | 16 | 14.5 |
| GQR 10-32-14 | G1 1/2 (DN32 PN6) | 62 | 120 | 90 | 410 | 89 | 100 | 150 | 245 | 225 | 10 | 16 | 14.5 |
| GQR 10-32-16 | G1 1/2 (DN32 PN6) | 62 | 120 | 90 | 435 | 89 | 100 | 150 | 245 | 250 | 10 | 16 | 15.5 |
| GQR 10-32-18 | G1 1/2 (DN32 PN6) | 62 | 120 | 90 | 455 | 89 | 100 | 150 | 245 | 270 | 10 | 16 | 17.2 |
| GQR 10-32-20 | G1 1/2 (DN32 PN6) | 62 | 120 | 90 | 485 | 89 | 100 | 150 | 245 | 300 | 10 | 16 | 18.7 |
| GQR 6-32-24 | G1 1/2 (DN32 PN6) | 75 | 120 | 90 | 498.5 | 91 | 99 | 160 | 254 | 305 | 6 | 16 | - |
| GQR 6-32-27 | G1 1/2 (DN32 PN6) | 75 | 120 | 90 | 498.5 | 91 | 99 | 160 | 254 | 305 | 6 | 16 | - |
| GQR 6-32-30 | G1 1/2 (DN32 PN6) | 75 | 120 | 90 | 518.5 | 91 | 99 | 160 | 254 | 335 | 6 | 16 | - |
| GQR 10-50-14 | G2 (DN50 PN10) | 62 | 165 | 125 | 457 | 90 | 108 | 150 | 248 | 272 | 10 | 19 | - |
| GQR 10-50-16 | G2 (DN50 PN10) | 62 | 165 | 125 | 457 | 90 | 108 | 150 | 248 | 272 | 10 | 19 | - |
| GQR 10-50-18 | G2 (DN50 PN10) | 62 | 165 | 125 | 487 | 90 | 108 | 150 | 248 | 302 | 10 | 19 | - |

**L min:** = Minimum immersion depth

| TYPE | | mm | | | | | | | | | | | | | kg |
|---|---|---|---|---|---|---|---|---|---|---|---|---|---|---|---|
| | DN2 | a | de | dk | fM | j1 | l1 | l2 | l5 | l5 | L max | L min | ps | s | Weight |
| GQRM 10-32-10 | G1 1/2 (DN32 PN6) | 62 | 120 | 90 | 395 | 430 | 89 | 100 | 150 | 245 | 415 | 210 | 10 | 16 | 14.5 |
| GQRM 10-32-12 | G1 1/2 (DN32 PN6) | 62 | 120 | 90 | 410 | 430 | 89 | 100 | 150 | 245 | 430 | 225 | 10 | 16 | 15.6 |
| GQRM 10-32-14 | G1 1/2 (DN32 PN6) | 62 | 120 | 90 | 410 | 430 | 89 | 100 | 150 | 245 | 430 | 225 | 10 | 16 | 15.5 |
| GQRM 10-32-16 | G1 1/2 (DN32 PN6) | 62 | 120 | 90 | 435 | 430 | 89 | 100 | 150 | 245 | 455 | 250 | 10 | 16 | 17.7 |
| GQRM 10-32-18 | G1 1/2 (DN32 PN6) | 62 | 120 | 90 | 455 | 430 | 89 | 100 | 150 | 245 | 475 | 270 | 10 | 16 | 19.2 |
| GQRM 10-32-20 | G1 1/2 (DN32 PN6) | 62 | 120 | 90 | 485 | 430 | 89 | 100 | 150 | 245 | 505 | 300 | 10 | 16 | 21.3 |
| GQRM 6-32-24 | G1 1/2 (DN32 PN6) | 75 | 120 | 90 | 498.5 | 430 | 91 | 99 | 160 | 254 | 574 | 314 | 6 | 16 | - |
| GQRM 6-32-27 | G1 1/2 (DN32 PN6) | 75 | 120 | 90 | 518.5 | 430 | 91 | 99 | 160 | 254 | 594 | 334 | 6 | 16 | - |
| GQRM 10-50-14 | G2 (DN50 PN10) | 62 | 165 | 125 | 457 | 430 | 90 | 108 | 150 | 248 | 532 | 272 | 10 | 19 | - |
| GQRM 10-50-16 | G2 (DN50 PN10) | 62 | 165 | 125 | 487 | 430 | 90 | 108 | 150 | 248 | 562 | 302 | 10 | 19 | - |

**weights** With cable length: 10 m

# GQR

## Installation examples

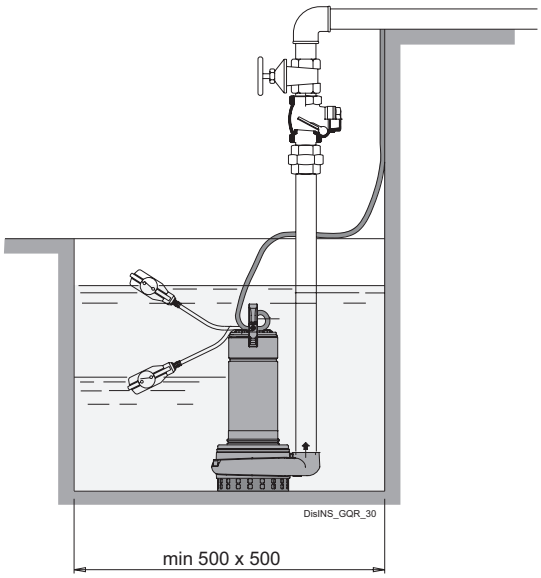


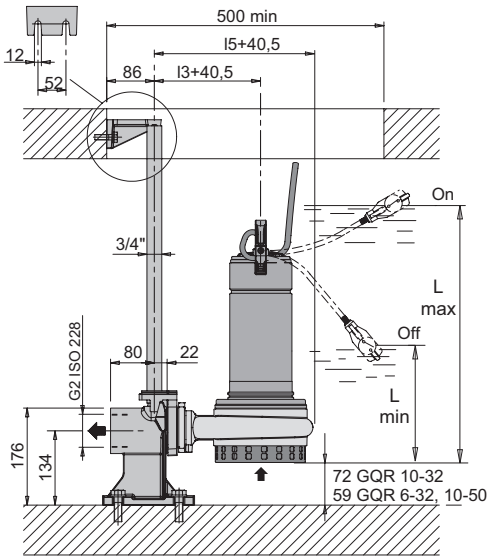


## Installation examples with vertical magnetic float switch

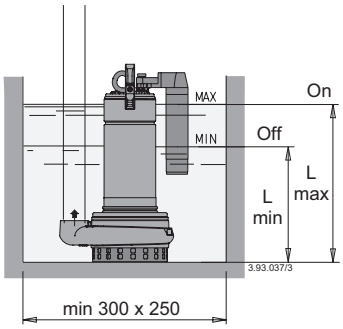


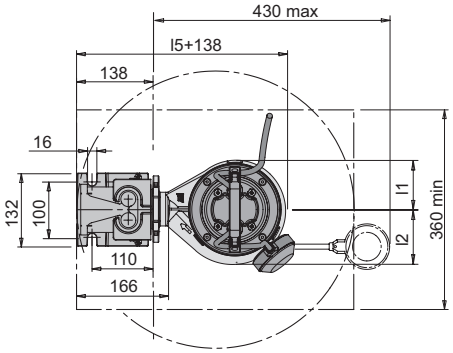


| TYPE | | mm | | kg |
|---|---|---|---|---|
| | DN2 | Lmax | Lmin | Weight |
| GQRM 10-10 GF | G1 1/2 | 410 | 205 | 14.1 |
| GQRM 10-12 GF | G1 1/2 | 425 | 220 | 15 |
| GQRM 10-14 GF | G1 1/2 | 425 | 220 | 15.5 |
| GQRM 10-16 GF | G1 1/2 | 450 | 245 | 17.4 |
| GQRM 10-18 GF | G1 1/2 | 470 | 265 | 19 |

## Examples of installations

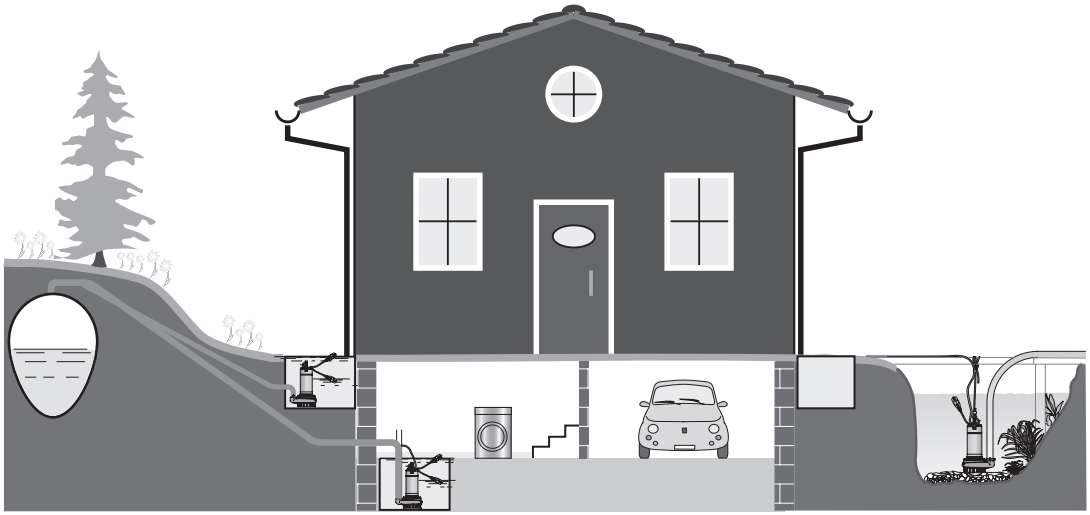

ed. 03/2025

# GX 40

(patented system)

**Coverage chart n ≈ 2900 rpm**

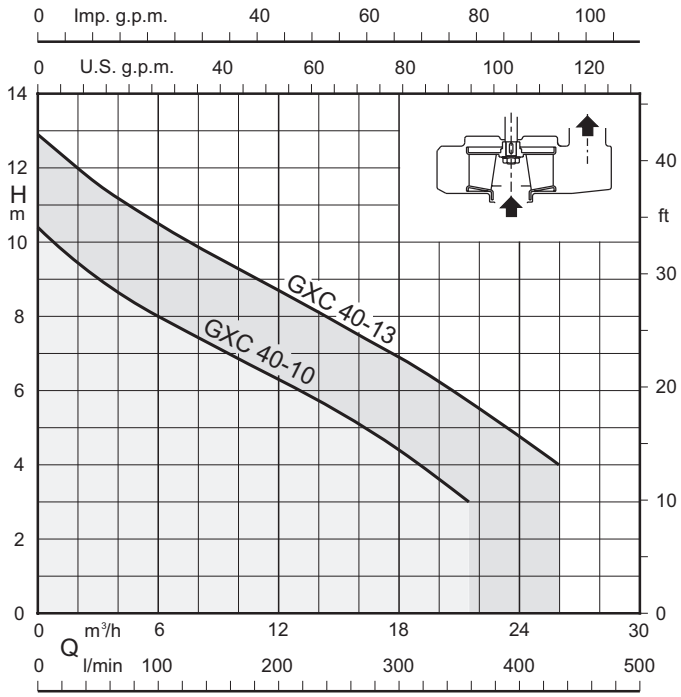


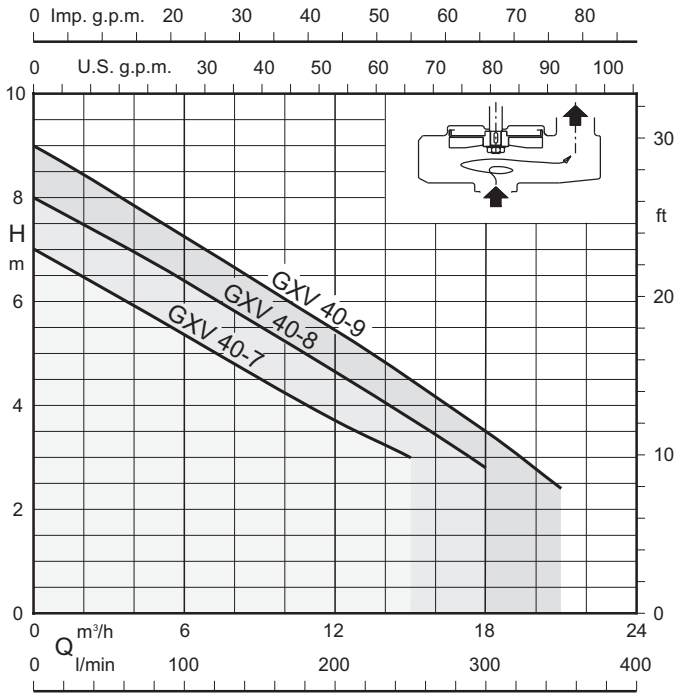


72.918-N

# Stainless steel submersible pumps sewage and drainage

# GX 40

## Construction

Single-impeller submersible pumps in chrome-nickel stainless steel, with vertical delivery port.
GXC: with two-passage impeller.
GXV: with free-flow (vortex) impeller
Double shaft seal with interposed oil chamber.

## Applications

Clean and dirty water, also containing solids up to 35 mm grain size.
The GXV free-flow impeller construction is particularly suitable for liquids with a high solid content or with filamentous particles.
This construction (with smooth surfaces in rolled-stainless steel and easy access for cleaning) is also suitable for certain uses in the food industry.

## Operating conditions

Liquid temperature up to 35° C.
Maximum immersion depth: 5 m.
Maximum immersion depth: 5 m.
Continuous duty (with submerged motor).

## Motor

2-pole induction motor, 50 Hz (n ≈ 2900 rpm).
**GXC, GXV:** three-phase 230 V ± 10%;
400V ± 10%;
H07RN-F cable, 3G1 mm², length 10 m, with CEI-UNEL 74166 plug.
**GXRM, GXVM:** single-phase 230 V ± 10%,
with float switch and thermal protector.
Incorporated capacitor.
Cable: H07RN-F, 3G1 mm2, length 10 m, with plug CEI-UNEL 47166.
Insulation class F.
Protection IP X8 (for continuous immersion)
Triple impregnation humidity-proof dry winding.
Constructed in accordance with EN 60034-1, EN 60335-1, EN 60335-2-41.

## Special features on request

Other voltages.
Frequency 60 Hz (as per 60 Hz data sheet).
Other mechanical seal.
Cable length 20 m.
Motor suitable for operation with frequency converter.
Three-phase pumps with incorporated float switch.

## Designation

Example: GXCM 40-7
GX = Series
C = Two-passage impeller
V = Free-flow impeller (wortex impeller)
M = Single-phase (without three-phase indication)
40 = Delivery port diameter in mm
7 = Total head in m indoors

## Materials

| Components | Materials |
|---|---|
| Pump casing | Chrome-nickel steel 1.4301 EN 10088 (AISI 304) |
| Impeller | Chrome-nickel steel 1.4301 EN 10088 (AISI 304) |
| motor jacket | Chrome-nickel steel 1.4301 EN 10088 (AISI 304) |
| Jacket cover | Chrome-nickel steel 1.4301 EN 10088 (AISI 304) |
| Casing cover | Chrome-nickel steel 1.4301 EN 10088 (AISI 304) |
| Handle | Polypropylene (with frame 1.4301 EN 10088 (AISI 304)) |
| Shaft | Chrome-nickel steel 1.4301 EN 10088 (AISI 304) |
| Upper mechanical seal | Ceramic / Carbon / NBR |
| Lower mechanical seal | Ceramic / Carbon / NBR |
| Seal lubrication oil | Oil for food/pharmaceutical machinery |

# GX 40

calpeda®

## Coverage chart n ≈ 2900 rpm

### Three-phase

| | | | | Q = Flow | | | | | | | | | | |
|---|---|---|---|---|---|---|---|---|---|---|---|---|---|---|
| | | | | m³/h | 0 | 3 | 6 | 9 | 12 | 15 | 18 | 21 | 24 | 26 |
| Model | 400V | P2 | | l/min | | 50 | 100 | 150 | 200 | 250 | 300 | 350 | 400 | 433 |
| | A | kW | HP | H (m) = Total head | | | | | | | | | | |
| GXC 40-10 | 1,6 | 0,55 | 0,75 | | 10,4 | 9 | 8 | 7,1 | 6,3 | 5,4 | 4,4 | 3,2 | - | - |
| GXC 40-13 | 2,3 | 0,9 | 1,2 | | 12,9 | 11,6 | 10,5 | 9,5 | 8,7 | 7,8 | 6,9 | 5,9 | 4,7 | 4 |

### Three-phase

| | | | | Q = Flow | | | | | | | | |
|---|---|---|---|---|---|---|---|---|---|---|---|---|
| | | | | m³/h | 0 | 3 | 6 | 9 | 12 | 15 | 18 | 21 |
| Model | 400V | P2 | | l/min | | 50 | 100 | 150 | 200 | 250 | 300 | 350 |
| | A | kW | HP | H (m) = Total head | | | | | | | | |
| GXV 40-7 | 1,6 | 0,55 | 0,75 | | 7 | 6,2 | 5,4 | 4,6 | 3,7 | 3 | - | - |
| GXV 40-8 | 2,2 | 0,75 | 1 | | 8 | 7,2 | 6,4 | 5,5 | 4,6 | 3,7 | 2,8 | - |
| GXV 40-9 | 2,3 | 0,9 | 1,2 | | 9 | 8,1 | 7,2 | 6,3 | 5,4 | 4,5 | 3,5 | 2,4 |

### Single-phase

| | | | | | | | Q = Flow | | | | | | | | | | |
|---|---|---|---|---|---|---|---|---|---|---|---|---|---|---|---|---|---|
| | | | | | | | m³/h | 0 | 3 | 6 | 9 | 12 | 15 | 18 | 21 | 24 | 26 |
| Model | 230V | Capacitor | | P2 | | P1 | l/min | | 50 | 100 | 150 | 200 | 250 | 300 | 350 | 400 | 433 |
| | A | Vc | uf | kW | HP | kW | H (m) = Total head | | | | | | | | | | |
| GXCM 40-10 | 4,6 | 450 | 16 | 0,55 | 0,75 | 1 | | 10,4 | 9 | 8 | 7,1 | 6,3 | 5,4 | 4,4 | 3,2 | - | - |
| GXCM 40-13 | 6,6 | 450 | 25 | 0,9 | 1,2 | 1,45 | | 12,9 | 11,6 | 10,5 | 9,5 | 8,7 | 7,8 | 6,9 | 5,9 | 4,7 | 4 |

### Single-phase

| | | | | | | | Q = Flow | | | | | | | | |
|---|---|---|---|---|---|---|---|---|---|---|---|---|---|---|---|
| | | | | | | | m³/h | 0 | 3 | 6 | 9 | 12 | 15 | 18 | 21 |
| Model | 230V | Capacitor | | P2 | | P1 | l/min | | 50 | 100 | 150 | 200 | 250 | 300 | 350 |
| | A | Vc | uf | kW | HP | kW | H (m) = Total head | | | | | | | | |
| GXVM 40-7 | 4,6 | 450 | 16 | 0,55 | 0,75 | 1 | | 7 | 6,2 | 5,4 | 4,6 | 3,7 | 3 | - | - |
| GXVM 40-8 | 5,4 | 450 | 25 | 0,75 | 1 | 1,1 | | 8 | 7,2 | 6,4 | 5,5 | 4,6 | 3,7 | 2,8 | - |
| GXVM 40-9 | 6 | 450 | 25 | 0,9 | 1,2 | 1,3 | | 9 | 8,1 | 7,2 | 6,3 | 5,4 | 4,5 | 3,5 | 2,4 |

**P1:** Maximum power input.
**P2:** Rated motor power output.
**Head and power values valid for liquids with density ρ = 1,0 kg/dm3 and kinematic viscosity v = max 20 mm2/sec.** Total head in m

# GX 40

calpeda®

## Dimensions and weights

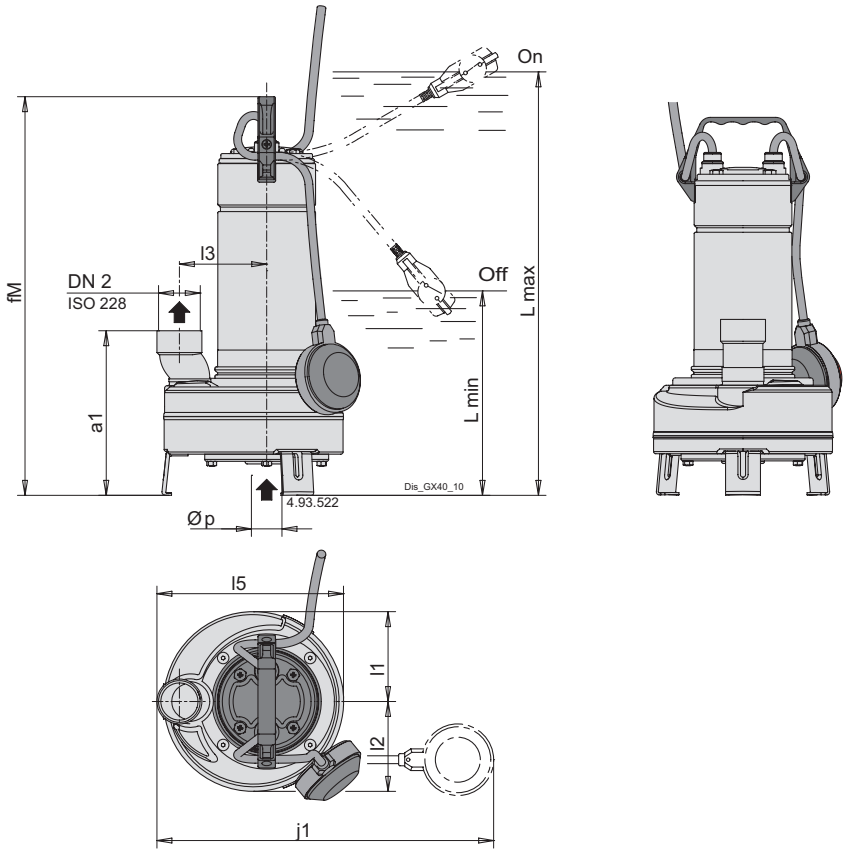


| TYPE | ISO 228 | mm | | | | | | | kg |
|---|---|---|---|---|---|---|---|---|---|
| | DN2 | a1 | fM | l1 | l2 | l5 | l5 | p | Weight |
| **GXV 40-7** | G1 1/2 | 190 | 433 | 103 | 103 | 100 | 215 | 35 | 10 |
| **GXV 40-8** | G1 1/2 | 190 | 458 | 103 | 103 | 100 | 215 | 35 | 11 |
| **GXV 40-9** | G1 1/2 | 190 | 458 | 103 | 103 | 100 | 215 | 35 | 11.1 |

| TYPE | ISO 228 | mm | | | | | | | | | | kg |
|---|---|---|---|---|---|---|---|---|---|---|---|---|
| | DN2 | a1 | fM | j1 | l1 | l2 | l5 | l5 | Lmax | Lmin | p | Weight |
| **GXVM 40-7** | G1 1/2 | 190 | 433 | 405 | 103 | 103 | 100 | 215 | 508 | 248 | 35 | 11.2 |
| **GXVM 40-8** | G1 1/2 | 190 | 458 | 405 | 103 | 103 | 100 | 215 | 533 | 273 | 35 | 13 |
| **GXVM 40-9** | G1 1/2 | 190 | 458 | 405 | 103 | 103 | 100 | 215 | 533 | 273 | 35 | 13 |

| TYPE | ISO 228 | mm | | | | | | | kg |
|---|---|---|---|---|---|---|---|---|---|
| | DN2 | a1 | fM | l1 | l2 | l5 | l5 | p | Weight |
| **GXC 40-10** | G1 1/2 | 190 | 433 | 103 | 103 | 100 | 215 | 35 | 11 |
| **GXC 40-13** | G1 1/2 | 190 | 458 | 103 | 103 | 100 | 215 | 35 | 11.3 |

| TYPE | ISO 228 | mm | | | | | | | | | | kg |
|---|---|---|---|---|---|---|---|---|---|---|---|---|
| | DN2 | a1 | fM | j1 | l1 | l2 | l5 | l5 | Lmax | Lmin | p | Weight |
| **GXCM 40-10** | G1 1/2 | 190 | 433 | 405 | 103 | 103 | 100 | 215 | 508 | 248 | 35 | 11.5 |
| **GXCM 40-13** | G1 1/2 | 190 | 458 | 405 | 103 | 103 | 100 | 215 | 533 | 273 | 35 | 13.3 |

**weights** With cable length: 10 m

# GX 40

## Examples of installations

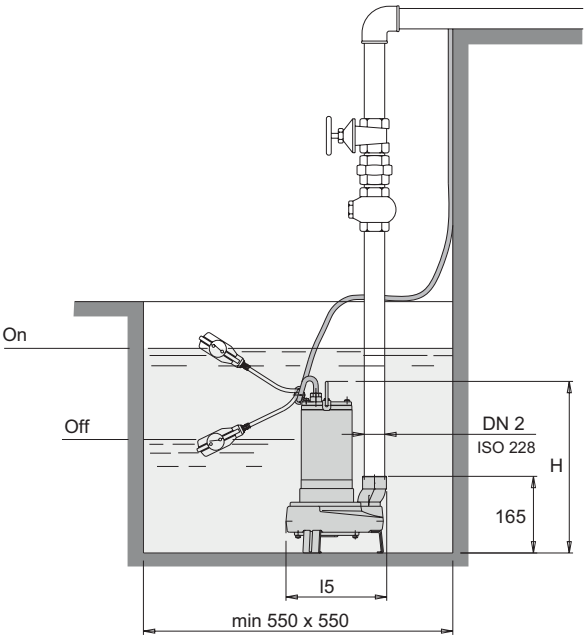


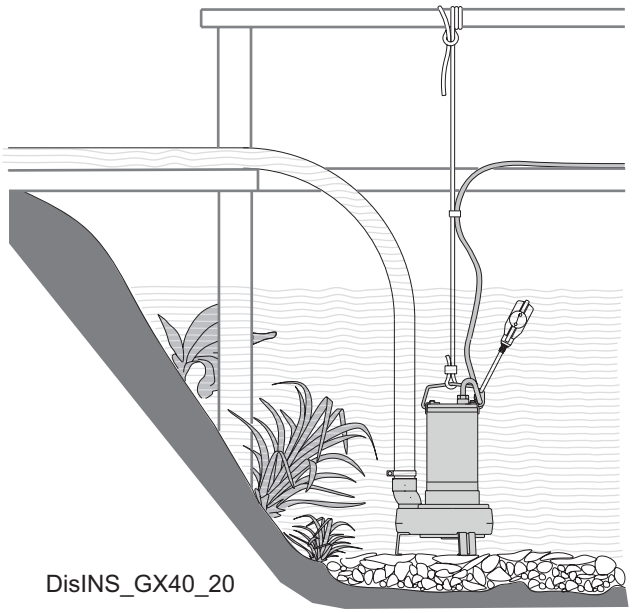


## Example of connection

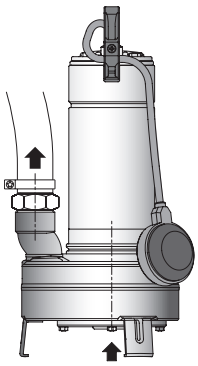

Pump with hosetail seat and clamp (locally available)

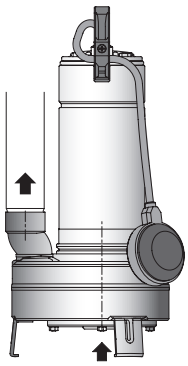

Pump with pipe screwed into the delivery port

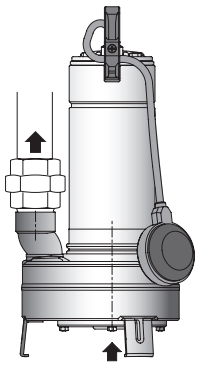

Pump with pipe and union (locally available)

ed. 03/2025

# GQV, GQS

(patented system)

**Coverage chart n ≈ 2900 rpm**

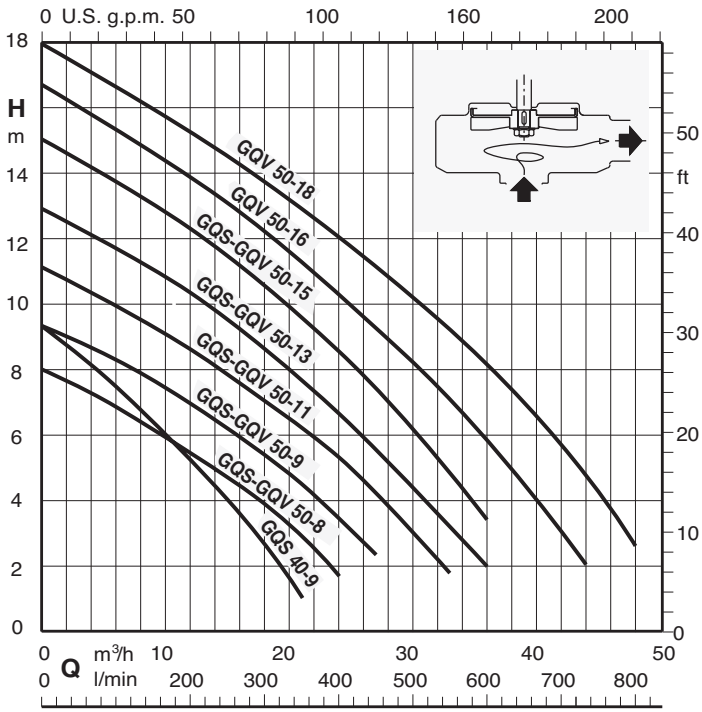


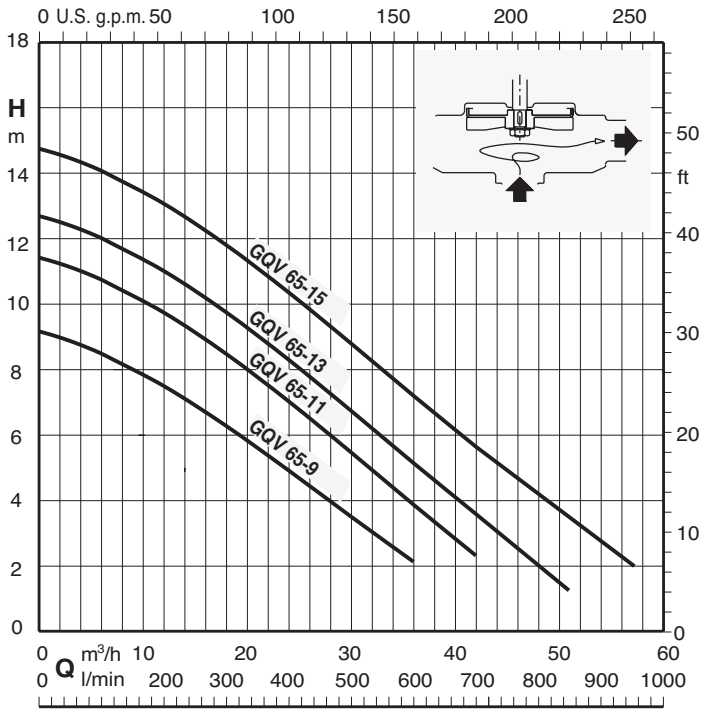


# Submersible sewage and drainage pumps

# GQV, GQS

## Construction

Single-impeller submersible pumps, with free-flow (vortex) impeller.
**GQS:** with threaded vertical delivery port G 1 1/2" or G 2".
**GQV:** with threaded horizontal delivery port G 2" or G 2 1/2" and flanged DN 50 or DN 65.
Double mechanical shaft seal with interposed oil chamber, to protect against dry-running.

## Applications

For civil and industrial wastewater that is not aggressive to the pump materials, for dirty water even with solids with a diameter of 40, 50, 65 mm.
Emptying of flooded rooms or tanks.
Water extraction from ponds, flowing streams, or pits for rainwater collection.

## Operating conditions

Liquid temperature up to 35° C.
Steam pH: 6-11.
Maximum immersion depth: 5 m.
Minimum immersion depth:
- 200 mm for GQS 40
- 275 mm for GQS, GQV 50.
- 355 mm for GQV 65.

Continuous duty (with submerged motor).

## Motor

2-pole induction motor, 50Hz (n ≈ 2900 1/min).
**GQS, GQV:** three-phase 230V ± 10%
400V ± 10%
Cable: H07RN-F, 4G1 mm2, length 10 m, without plug.
**GQSM, GQVM:** single-phase 230V ± 10%
with float switch and thermal protector.
Incorporated capacitor
Cable: H07RN-F, 3G1 mm2, length 10 m, with plug CEI-UNEL 47166.
Insulation class F.
Protection IP X8 (for continuous immersion).
Dry winding with triple moisture-resistant impregnation (double for GQS 40).
Constructed in accordance with EN 60034-1, EN 60335-1, EN 60335-2-41.

## Special features on request

Other voltages.
Frequency 60 Hz (as per 60 Hz data sheet).
Other mechanical seal.
Cable length 20 m.
Motor set up for operation with inverter.
Three-phase pumps with built-in switch and float.

## Designation

Example: GQSM 40-9
GQ = Series
S = Vertical Vortex impeller V = Horizontal Vortex impeller
M = Single-phase (no indication: three-phase)
40 = Free passage diameter in mm
9 = Total head in m indoors

## Materials

| Components | Materials |
|---|---|
| Pump casing | Cast iron GJL 200 EN 1561 |
| Impeller | Cast iron GJL 200 EN 1561, Steel 1.4301 EN 10088 (AISI 304) for GQS 40 |
| motor jacket | Chrome-nickel steel 1.4301 EN 10088 (AISI 304) |
| Jacket cover | Chrome-nickel steel 1.4301 EN 10088 (AISI 304) |
| Casing cover | Chrome-nickel steel 1.4301 EN 10088 (AISI 304) |
| Handle | Polypropylene (with frame made of 1.4301 EN 10088 (AISI 304)) |
| Shaft | Steel 1.4301 EN 10088 (AISI 304), Steel 1.4305 EN 10088 (AISI 303) for GQS 40 |
| Upper mechanical seal | Ceramic / Carbon / NBR (not present for GQS 40) |
| Lower mechanical seal | Ceramic / Carbon / NBR |
| Seal lubrication oil | Oil for food/pharmaceutical machinery |

# GQV, GQS

calpeda

## Coverage chart n ≈ 2900 rpm

### Three-phase

| | | | | Q = Flow | | | | | | | | | |
|---|---|---|---|---|---|---|---|---|---|---|---|---|---|
| | | | | m³/h | 0 | 1,5 | 3 | 6 | 9 | 12 | 15 | 18 | 21 |
| Model | 400V | P2 | | l/min | | 25 | 50 | 100 | 150 | 200 | 250 | 300 | 350 |
| | A | kW | HP | H (m) = Total head | | | | | | | | | |
| GQS 40-9 | 1,6 | 0,45 | 0,6 | | 9,3 | 8,8 | 8,3 | 7,3 | 6,3 | 5,2 | 3,8 | 2,3 | 0,9 |

| | | | | Q = Flow | | | | | | | | | | | | | | | | | |
|---|---|---|---|---|---|---|---|---|---|---|---|---|---|---|---|---|---|---|---|---|---|
| | | | | m³/h | 0 | 3 | 6 | 9 | 12 | 15 | 18 | 21 | 24 | 27 | 30 | 33 | 36 | 39 | 42 | 44 | 48 |
| Model | 400V | P2 | | l/min | | 50 | 100 | 150 | 200 | 250 | 300 | 350 | 400 | 450 | 500 | 550 | 600 | 650 | 700 | 733 | 800 |
| | A | kW | HP | H (m) = Total head | | | | | | | | | | | | | | | | | |
| GQS 50-8 | 1,5 | 0,55 | 0,75 | | 8 | 7,4 | 6,9 | 6,3 | 5,6 | 4,8 | 4 | 3 | 1,8 | - | - | - | - | - | - | - | - |
| GQV 50-8 | 1,5 | 0,55 | 0,75 | | 8 | 7,4 | 6,9 | 6,3 | 5,6 | 4,8 | 4 | 3 | 1,8 | - | - | - | - | - | - | - | - |
| GQS 50-9 | 1,8 | 0,75 | 1 | | 9,3 | 8,8 | 8,3 | 7,7 | 7 | 6,2 | 5,3 | 4,3 | 3,2 | 2,2 | - | - | - | - | - | - | - |
| GQV 50-9 | 1,8 | 0,75 | 1 | | 9,3 | 8,8 | 8,3 | 7,7 | 7 | 6,2 | 5,3 | 4,3 | 3,2 | 2,2 | - | - | - | - | - | - | - |
| GQS 50-11 | 2,3 | 0,9 | 1,2 | | 11 | 10,5 | 10 | 9,3 | 8,6 | 7,8 | 7 | 6,2 | 5,2 | 4,2 | 3 | 1,8 | - | - | - | - | - |
| GQV 50-11 | 2,3 | 0,9 | 1,2 | | 11 | 10,5 | 10 | 9,3 | 8,6 | 7,8 | 7 | 6,2 | 5,2 | 4,2 | 3 | 1,8 | - | - | - | - | - |
| GQS 50-13 | 3 | 1,1 | 1,5 | | 12,8 | 12,2 | 11,6 | 11 | 10,3 | 9,5 | 8,6 | 7,7 | 6,7 | 5,7 | 4,5 | 3,3 | 2 | - | - | - | - |
| GQV 50-13 | 3 | 1,1 | 1,5 | | 12,8 | 12,2 | 11,6 | 11 | 10,3 | 9,5 | 8,6 | 7,7 | 6,7 | 5,7 | 4,5 | 3,3 | 2 | - | - | - | - |
| GQS 50-15 | 4 | 1,5 | 2 | | 15 | 14,4 | 13,7 | 13 | 12,2 | 11,3 | 10,4 | 9,5 | 8,5 | 7,4 | 6,2 | 4,8 | 3,5 | - | - | - | - |
| GQV 50-15 | 4 | 1,5 | 2 | | 15 | 14,4 | 13,7 | 13 | 12,2 | 11,3 | 10,4 | 9,5 | 8,5 | 7,4 | 6,2 | 4,8 | 3,5 | - | - | - | - |
| GQV 50-16 | 5 | 2 | 2,7 | | 16 | 16 | 15,3 | 14,5 | 13,7 | 12,9 | 12 | 11,1 | 10,2 | 9,2 | 8,2 | 7,1 | 5,9 | 4,6 | 3,1 | 2 | - |
| GQV 50-18 | 7,5 | 2,6 | 3,5 | | 18 | 17,4 | 16,7 | 16 | 15,3 | 14,5 | 13,8 | 12,9 | 12,1 | 11,2 | 10,3 | 9,3 | 8,2 | 7,1 | 5,8 | 4,8 | 2,6 |

| | | | | Q = Flow | | | | | | | | | | | | |
|---|---|---|---|---|---|---|---|---|---|---|---|---|---|---|---|---|
| | | | | m³/h | 0 | 6 | 12 | 18 | 24 | 30 | 36 | 42 | 48 | 51 | 54 | 57 |
| Model | 400V | P2 | | l/min | | 100 | 200 | 300 | 400 | 500 | 600 | 700 | 800 | 850 | 900 | 950 |
| | A | kW | HP | H (m) = Total head | | | | | | | | | | | | |
| GQV 65-9 | 3 | 1,1 | 1,5 | | 9,1 | 8,5 | 7,5 | 6,3 | 4,9 | 3,5 | 2,1 | - | - | - | - | - |
| GQV 65-11 | 4 | 1,5 | 2 | | 11,4 | 10,7 | 9,7 | 8,5 | 7 | 5,5 | 3,9 | 2,3 | - | - | - | - |
| GQV 65-13 | 5 | 2 | 2,7 | | 13 | 11,9 | 11 | 10 | 8,8 | 7,6 | 6,1 | 4,3 | 2,3 | 1,2 | - | - |
| GQV 65-15 | 7,5 | 2,6 | 3,5 | | 15 | 13,9 | 13 | 12 | 10,9 | 9,8 | 8,5 | 7 | 5 | 3,9 | 2,8 | 2 |

### Single-phase

| | | | | | | | Q = Flow | | | | | | | | | |
|---|---|---|---|---|---|---|---|---|---|---|---|---|---|---|---|---|
| | | | | | | | m³/h | 0 | 1,5 | 3 | 6 | 9 | 12 | 15 | 18 | 21 |
| Model | 230V | Capacitor | | P2 | | P1 | l/min | | 25 | 50 | 100 | 150 | 200 | 250 | 300 | 350 |
| | A | Vc | uf | kW | HP | kW | H (m) = Total head | | | | | | | | | |
| GQSM 40-9 | 4,5 | 450 | 20 | 0,45 | 0,6 | 0,95 | | 9,3 | 8,8 | 8,3 | 7,3 | 6,3 | 5,2 | 3,8 | 2,3 | 0,9 |

| | | | | | | | Q = Flow | | | | | | | | | | | | | |
|---|---|---|---|---|---|---|---|---|---|---|---|---|---|---|---|---|---|---|---|---|
| | | | | | | | m³/h | 0 | 3 | 6 | 9 | 12 | 15 | 18 | 21 | 24 | 27 | 30 | 33 | 36 |
| Model | 230V | Capacitor | | P2 | | P1 | l/min | | 50 | 100 | 150 | 200 | 250 | 300 | 350 | 400 | 450 | 500 | 550 | 600 |
| | A | Vc | uf | kW | HP | kW | H (m) = Total head | | | | | | | | | | | | | |
| GQSM 50-8 | 4,3 | 450 | 16 | 0,55 | 0,75 | 0,95 | | 8 | 7,4 | 6,9 | 6,3 | 5,6 | 4,8 | 4 | 3 | 1,8 | - | - | - | - |
| GQVM 50-8 | 4,3 | 450 | 16 | 0,55 | 0,75 | 0,95 | | 8 | 7,4 | 6,9 | 6,3 | 5,6 | 4,8 | 4 | 3 | 1,8 | - | - | - | - |
| GQSM 50-9 | 4,8 | 450 | 16 | 0,75 | 1 | 1,1 | | 9,3 | 8,8 | 8,3 | 7,7 | 7 | 6,2 | 5,3 | 4,3 | 3,2 | 2,2 | - | - | - |
| GQVM 50-9 | 4,8 | 450 | 16 | 0,75 | 1 | 1,1 | | 9,3 | 8,8 | 8,3 | 7,7 | 7 | 6,2 | 5,3 | 4,3 | 3,2 | 2,2 | - | - | - |
| GQSM 50-11 | 6,6 | 450 | 25 | 0,9 | 1,2 | 1,45 | | 11 | 10,5 | 10 | 9,3 | 8,6 | 7,8 | 7 | 6,2 | 5,2 | 4,2 | 3 | 1,8 | - |
| GQVM 50-11 | 6,6 | 450 | 25 | 0,9 | 1,2 | 1,45 | | 11 | 10,5 | 10 | 9,3 | 8,6 | 7,8 | 7 | 6,2 | 5,2 | 4,2 | 3 | 1,8 | - |
| GQSM 50-13 | 8,4 | 450 | 30 | 1,1 | 1,5 | 1,8 | | 12,8 | 12,2 | 11,6 | 11 | 10,3 | 9,5 | 8,6 | 7,7 | 6,7 | 5,7 | 4,5 | 3,3 | 2 |
| GQVM 50-13 | 8,4 | 450 | 30 | 1,1 | 1,5 | 1,8 | | 12,8 | 12,2 | 11,6 | 11 | 10,3 | 9,5 | 8,6 | 7,7 | 6,7 | 5,7 | 4,5 | 3,3 | 2 |
| GQSM 50-15 | 13 | 450 | 35 | 1,5 | 2 | 2,2 | | 15 | 14,4 | 13,7 | 13 | 12,2 | 11,3 | 10,4 | 9,5 | 8,5 | 7,4 | 6,2 | 4,8 | 3,5 |
| GQVM 50-15 | 13 | 450 | 35 | 1,5 | 2 | 2,2 | | 15 | 14,4 | 13,7 | 13 | 12,2 | 11,3 | 10,4 | 9,5 | 8,5 | 7,4 | 6,2 | 4,8 | 3,5 |

| | | | | | | | Q = Flow | | | | | | | | |
|---|---|---|---|---|---|---|---|---|---|---|---|---|---|---|---|
| | | | | | | | m³/h | 0 | 6 | 12 | 18 | 24 | 30 | 36 | 42 |
| Model | 230V | Capacitor | | P2 | | P1 | l/min | | 100 | 200 | 300 | 400 | 500 | 600 | 700 |
| | A | Vc | uf | kW | HP | kW | H (m) = Total head | | | | | | | | |
| GQVM 65-9 | 8,4 | 450 | 30 | 1,1 | 1,5 | 1,8 | | 9,1 | 8,5 | 7,5 | 6,3 | 4,9 | 3,5 | 2,1 | - |
| GQVM 65-11 | 12 | 450 | 35 | 1,5 | 2 | 2,2 | | 11,4 | 10,7 | 9,7 | 8,5 | 7 | 5,5 | 3,9 | 2,3 |

**P1:** Maximum power input. **P2:** Rated motor power output.
Head and power values valid for liquids with density ρ = 1,0 kg/dm3 and kinematic viscosity ν = max 20 mm2/sec. Total head in m

# GQV, GQS

## Dimensions and weights

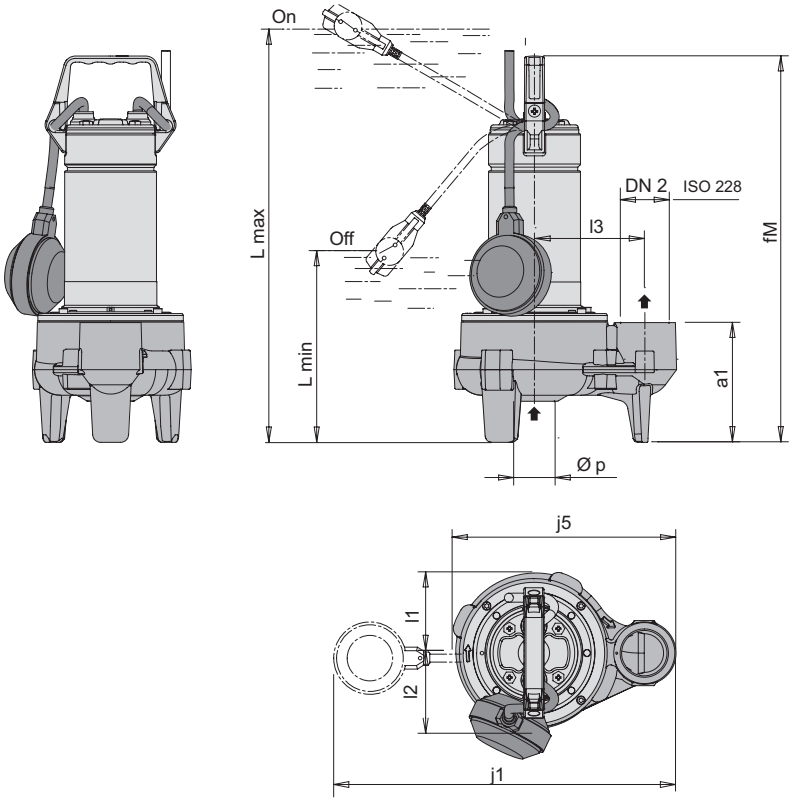


| TYPE | ISO 228 | mm | | | | | | | kg |
|---|---|---|---|---|---|---|---|---|---|
| | DN2 | a1 | fM | j5 | l1 | l2 | l5 | p | Weight |
| **GQS 40-9** | G1 1/2 | 120 | 385 | 222 | 78 | 81 | 110 | 40 | 10 |

| TYPE | ISO 228 | mm | | | | | | | | | | kg |
|---|---|---|---|---|---|---|---|---|---|---|---|---|
| | DN2 | a1 | fM | j1 | j5 | l1 | l2 | l5 | Lmax | Lmin | p | Weight |
| **GQSM 40-9** | G1 1/2 | 120 | 385 | 410 | 222 | 78 | 81 | 110 | 460 | 200 | 40 | 10.9 |

| TYPE | ISO 228 | mm | | | | | | | kg |
|---|---|---|---|---|---|---|---|---|---|
| | DN2 | a1 | fM | j5 | l1 | l2 | l5 | p | Weight |
| **GQS 50-8** | G 2 | 145 | 460 | 264 | 89 | 94 | 130 | 50 | 14.8 |
| **GQS 50-9** | G 2 | 145 | 460 | 264 | 89 | 94 | 130 | 50 | 15 |
| **GQS 50-11** | G 2 | 145 | 485 | 264 | 89 | 94 | 130 | 50 | 15.8 |
| **GQS 50-13** | G 2 | 145 | 505 | 264 | 89 | 94 | 130 | 50 | 17.8 |
| **GQS 50-15** | G 2 | 145 | 505 | 264 | 89 | 94 | 130 | 50 | 19.3 |

| TYPE | ISO 228 | mm | | | | | | | | | | kg |
|---|---|---|---|---|---|---|---|---|---|---|---|---|
| | DN2 | a1 | fM | j1 | j5 | l1 | l2 | l5 | Lmax | Lmin | p | Weight |
| **GQSM 50-8** | G 2 | 145 | 460 | 452 | 264 | 89 | 94 | 130 | 535 | 275 | 50 | 15.8 |
| **GQSM 50-9** | G 2 | 145 | 460 | 452 | 264 | 89 | 94 | 130 | 535 | 275 | 50 | 16 |
| **GQSM 50-11** | G 2 | 145 | 485 | 452 | 264 | 89 | 94 | 130 | 560 | 300 | 50 | 18.1 |
| **GQSM 50-13** | G 2 | 145 | 505 | 452 | 264 | 89 | 94 | 130 | 580 | 320 | 50 | 19.2 |
| **GQSM 50-15** | G 2 | 145 | 535 | 452 | 264 | 89 | 94 | 130 | 610 | 350 | 50 | 21.3 |

**weights** With cable length: 10 m

# GQV, GQS

## Dimensions and weights

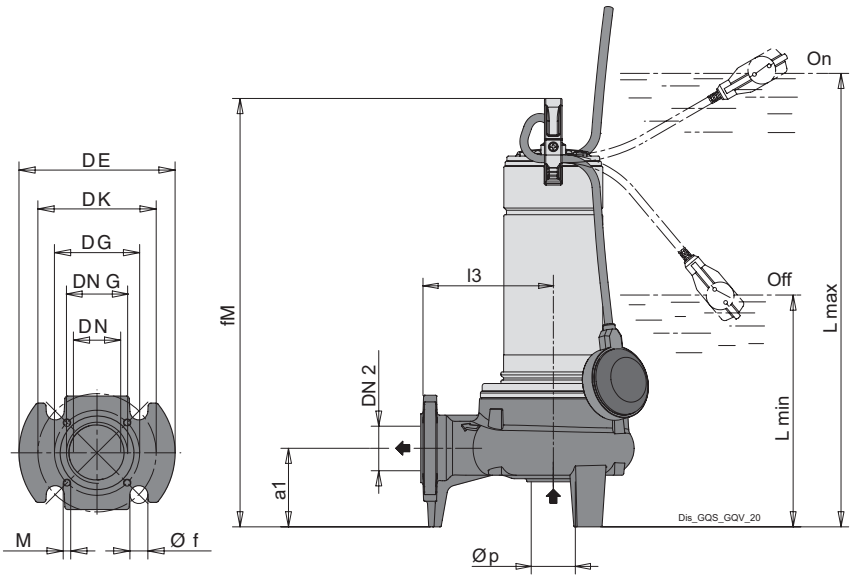


| DN | DN G | DE | DK | N. | Ø f | DG | N. | M |
|---|---|---|---|---|---|---|---|---|
| 50 | G 2 | 165 | 125 | 4 | 19 | 90 | 4 | M8 |
| 65 | G 21/2 | 185 | 145 | 4 | 19 | 118 | 4 | M8 |

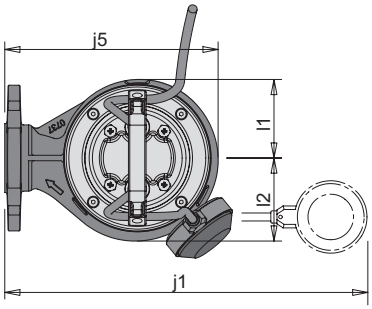


| TYPE | | mm | | | | | | | | kg |
|---|---|---|---|---|---|---|---|---|---|---|
| | DN2 | a1 | fM | l1 | l2 | l5 | l5 | p | s | Weight |
| **GQV 50-8** | G 2 (DN50) | 90 | 460 | 89 | 94 | 150 | 242 | 50 | 19 (M8) | 15 |
| **GQV 50-9** | G 2 (DN50) | 90 | 460 | 89 | 94 | 150 | 242 | 50 | 19 (M8) | 15.2 |
| **GQV 50-11** | G 2 (DN50) | 90 | 485 | 89 | 94 | 150 | 242 | 50 | 19 (M8) | 16 |
| **GQV 50-13** | G 2 (DN50) | 90 | 505 | 89 | 94 | 150 | 242 | 50 | 19 (M8) | 18 |
| **GQV 50-15** | G 2 (DN50) | 90 | 505 | 89 | 94 | 150 | 242 | 50 | 19 (M8) | 19.8 |
| **GQV 50-16** | G 2 (DN50) | 90 | 592 | 89 | 94 | 150 | 242 | 50 | 19 (M8) | - |
| **GQV 50-18** | G 2 (DN50) | 90 | 642 | 89 | 94 | 150 | 242 | 50 | 19 (M8) | - |
| **GQV 65-9** | G 2 1/2 (DN65) | 110 | 540 | 100 | 105 | 150 | 253 | 65 | 19 (M8) | 20.2 |
| **GQV 65-11** | G 2 1/2 (DN65) | 110 | 540 | 100 | 105 | 150 | 253 | 65 | 19 (M8) | 21.6 |
| **GQV 65-13** | G 2 1/2 (DN65) | 110 | 621 | 99.4 | 104.6 | 150 | 253 | 65 | 19 (M8) | - |
| **GQV 65-15** | G 2 1/2 (DN65) | 110 | 671 | 99.4 | 104.4 | 150 | 253 | 65 | 19 (M8) | - |

| TYPE | | mm | | | | | | | | | | | kg |
|---|---|---|---|---|---|---|---|---|---|---|---|---|---|
| | DN2 | a1 | fM | j1 | l1 | l2 | l5 | l5 | Lmax | Lmin | p | s | Weight |
| **GQVM 50-8** | G 2 (DN50) | 90 | 460 | 430 | 89 | 94 | 150 | 242 | 535 | 275 | 50 | 19 (M8) | 16 |
| **GQVM 50-9** | G 2 (DN50) | 90 | 460 | 430 | 89 | 94 | 150 | 242 | 535 | 275 | 50 | 19 (M8) | 16.2 |
| **GQVM 50-11** | G 2 (DN50) | 90 | 485 | 430 | 89 | 94 | 150 | 242 | 560 | 300 | 50 | 19 (M8) | 17.4 |
| **GQVM 50-13** | G 2 (DN50) | 90 | 505 | 430 | 89 | 94 | 150 | 242 | 580 | 320 | 50 | 19 (M8) | 19.4 |
| **GQVM 50-15** | G 2 (DN50) | 90 | 535 | 430 | 89 | 94 | 150 | 242 | 610 | 350 | 50 | 19 (M8) | 21.5 |
| **GQVM 65-9** | G 2 1/2 (DN65) | 110 | 540 | 430 | 100 | 105 | 150 | 253 | 615 | 355 | 65 | 19 (M8) | 21.7 |
| **GQVM 65-11** | G 2 1/2 (DN65) | 110 | 570 | 430 | 100 | 105 | 150 | 253 | 645 | 385 | 65 | 19 (M8) | 24.2 |

**weights** With cable length: 10 m

# GQV, GQS

## Examples of installations

**GQV 50...**

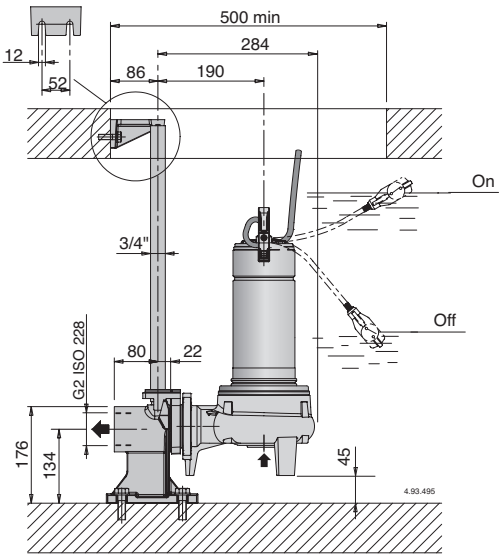


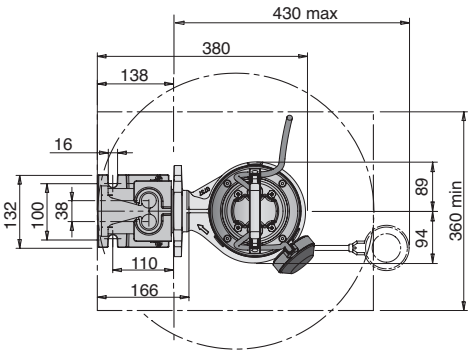


**GQV 65...**

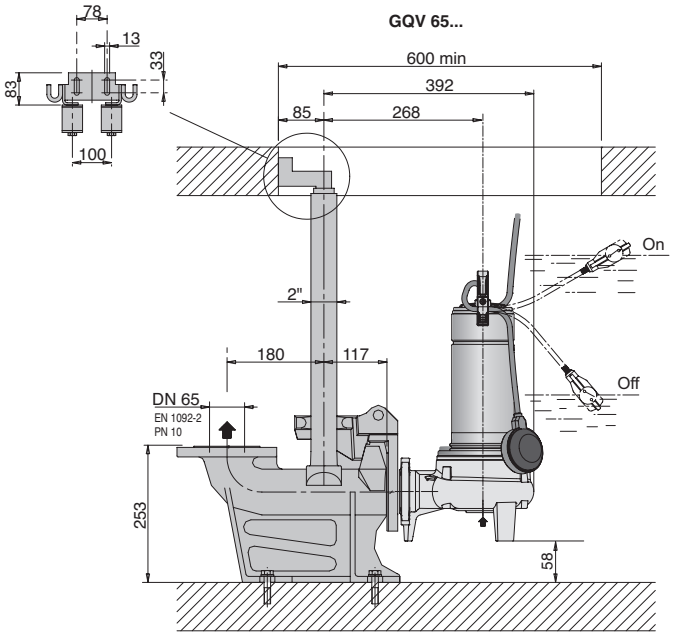


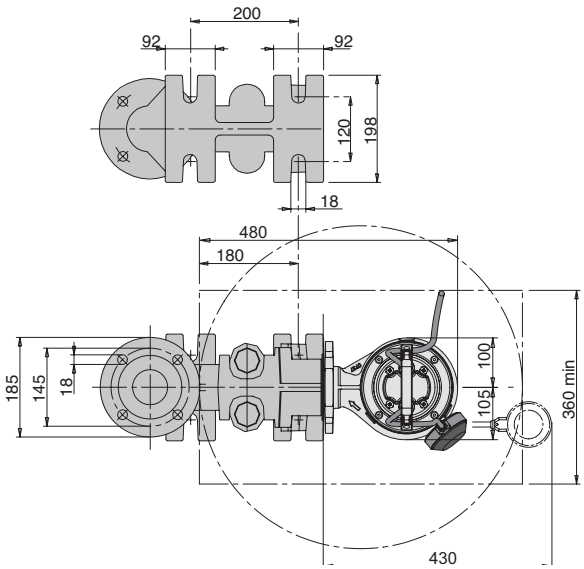


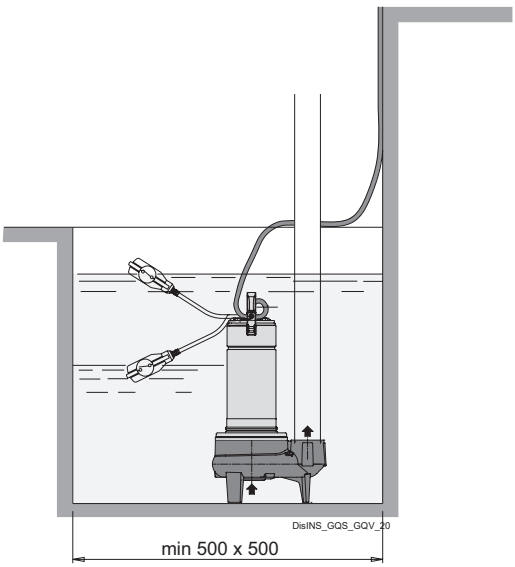


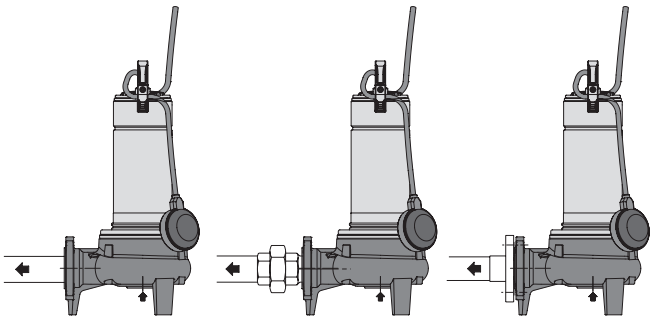

Pump with threaded ports: pipes screwed into the ports

Pump with threaded ports: pipes with union couplings (locally available)

Pump with flanged port: pipe with counterflange

# GQN

(patented system)

**Coverage chart n ≈ 2900 rpm**

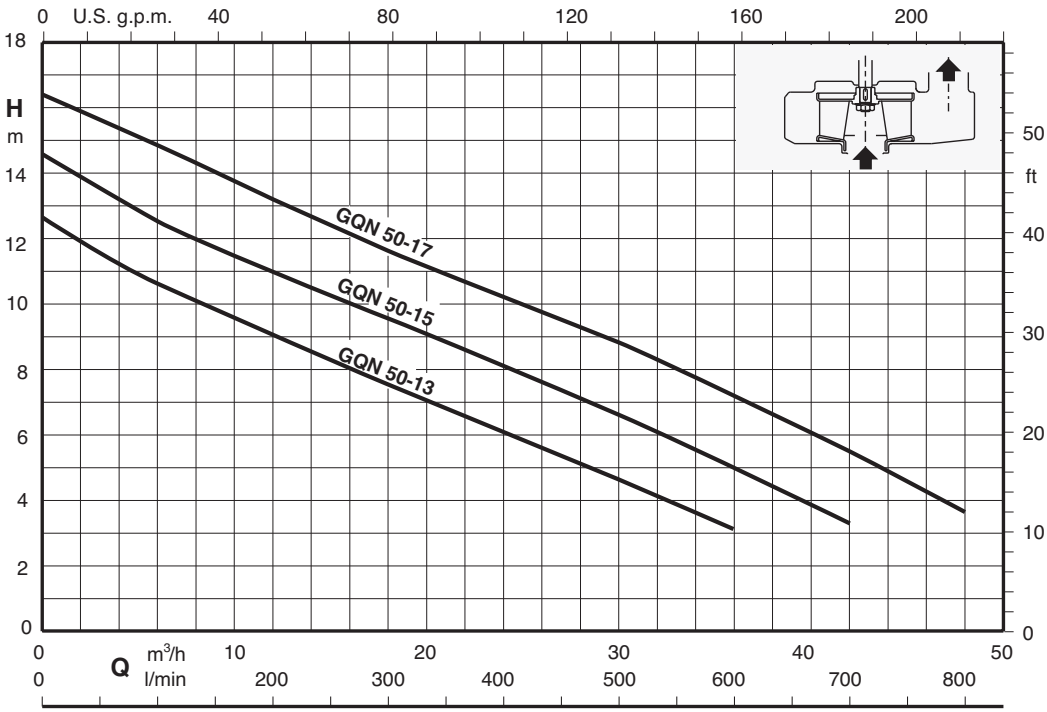


# Submersible sewage and drainage pumps

# GQN

## Construction

Single-impeller submersible pumps, (with two-passage) with channels impeller and vertical threaded delivery port (G 2”).
**Double mechanical shaft seal with interposed oil chamber, to protect against dry-running.**

## Applications

For civil and industrial wastewater that is not aggressive to the pump materials, for dirty water even with solids with a diameter of 50 mm.
Emptying of flooded rooms or tanks.
Water extraction from ponds, flowing streams, or pits for rainwater collection.

## Operating conditions

Maximum liquid temperature: 35 °C
pH value: 6-11.
Immersion depth: 5 m max
Minimum immersion depth: 275 mm.
Continuous duty (with submerged motor).

## Motor

2-pole induction motor, 50Hz (n ≈ 2900 1/min).
**GQN:** three-phase 230V ± 10%
400V ± 10%
Cable: H07RN-F, 4G1 mm2, length 10 m, without plug.
**GQNM:** single-phase 230V ± 10%
with float switch and thermal protector.
Incorporated capacitor
Cable: H07RN-F, 3G1 mm2, length 10 m, with plug CEI-UNEL 47166.
Insulation class F.
Protection IP X8 (for continuous immersion).
Triple impregnation humidity-proof dry winding
Constructed in accordance with EN 60034-1, EN 60335-1, EN 60335-2-41.

## Special features on request

Other voltages.
Frequency 60 Hz (as per 60 Hz data sheet).
Cable length 20 m.
Motor suitable for operation with frequency converter.
Three-phase pumps with incorporated float switch.

## Designation

Example: GQNM 50-15
GQ = Series
N = channels impeller
M = Single-phase (without three-phase indication)
50 = Free passage diameter in mm
15 = Total head in m indoors

## Materials

| Components | Materials |
|---|---|
| Pump casing | Cast iron GJL 200 EN 1561 |
| Impeller | Cast iron GJL 200 EN 1561 |
| motor jacket | Chrome-nickel steel 1.4301 EN 10088 (AISI 304) |
| Jacket cover | Chrome-nickel steel 1.4301 EN 10088 (AISI 304) |
| Casing cover | Chrome-nickel steel 1.4301 EN 10088 (AISI 304) |
| Handle | Polypropylene (with frame made of 1.4301 EN 10088 (AISI 304)) |
| Shaft | Chrome-nickel steel 1.4301 EN 10088 (AISI 304) |
| Upper mechanical seal | Ceramic / Carbon / NBR |
| Lower mechanical seal | Ceramic / Carbon / NBR |
| Seal lubrication oil | Oil for food/pharmaceutical machinery |

# GQN

calpeda®

## Coverage chart n ≈ 2900 rpm

### Three-phase

| | | | | Q = Flow | | | | | | | | | | |
|---|---|---|---|---|---|---|---|---|---|---|---|---|---|---|
| | | | | m³/h | 0 | 3 | 6 | 12 | 18 | 24 | 30 | 36 | 42 | 48 |
| Model | 400V | P2 | | l/min | | 50 | 100 | 200 | 300 | 400 | 500 | 600 | 700 | 800 |
| | A | kW | HP | H (m) = Total head | | | | | | | | | | |
| GQN 50-13 | 2,3 | 0,9 | 1,2 | | 12,7 | 11,6 | 10,6 | 8,9 | 7,7 | 6,3 | 4,7 | 3,1 | - | - |
| GQN 50-15 | 3,3 | 1,1 | 1,5 | | 14,7 | 13,5 | 12,6 | 10,9 | 9,6 | 8,3 | 6,7 | 5 | 3,2 | - |
| GQN 50-17 | 4,5 | 1,5 | 2 | | 16,4 | 15,7 | 14,9 | 13,2 | 11,7 | 10,3 | 8,9 | 7,3 | 5,5 | 3,6 |

### Single-phase

| | | | | | | | Q = Flow | | | | | | | | | | |
|---|---|---|---|---|---|---|---|---|---|---|---|---|---|---|---|---|---|
| | | | | | | | m³/h | 0 | 3 | 6 | 12 | 18 | 24 | 30 | 36 | 42 | 48 |
| Model | 230V | Capacitor | | P2 | | P1 | l/min | | 50 | 100 | 200 | 300 | 400 | 500 | 600 | 700 | 800 |
| | A | Vc | uf | kW | HP | kW | H (m) = Total head | | | | | | | | | | |
| GQNM 50-13 | 6,6 | 450 | 25 | 0,9 | 1,2 | 1,45 | | 12,7 | 11,6 | 10,6 | 8,9 | 7,7 | 6,3 | 4,7 | 3,1 | - | - |
| GQNM 50-15 | 8,4 | 450 | 30 | 1,1 | 1,5 | 1,8 | | 14,7 | 13,5 | 12,6 | 10,9 | 9,6 | 8,3 | 6,7 | 5 | 3,2 | - |
| GQNM 50-17 | 12 | 450 | 35 | 1,5 | 2 | 2,2 | | 16,4 | 15,7 | 14,9 | 13,2 | 11,7 | 10,3 | 8,9 | 7,3 | 5,5 | 3,6 |

**P2:** Rated motor power output.
**P1:** Maximum power input.
**Head and power values valid for liquids with density ρ = 1,0 kg/dm3 and kinematic viscosity v = max 20 mm2/sec.** Total head in m

# GQN

## Dimensions and weights

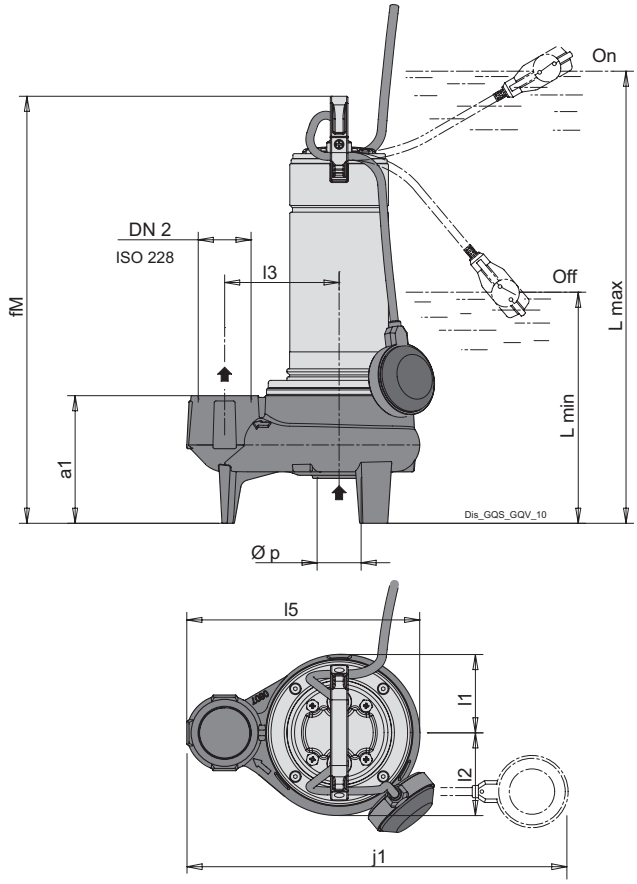


## Installation examples

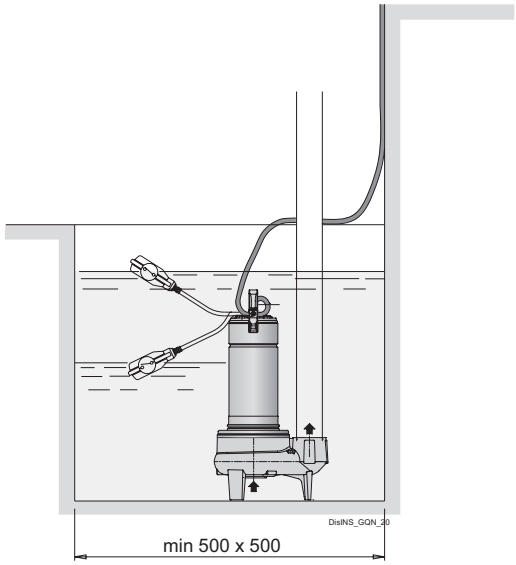


| TYPE | | mm | | | | | | | | kg |
|---|---|---|---|---|---|---|---|---|---|---|
| | DN2 | a1 | fM | j1 | l1 | l2 | l5 | l5 | p | Weight |
| **GQN 50-13** | G 2 (DN50) | 152.5 | 493 | 452 | 92 | 104 | 130 | 272 | 50 | 16.4 |
| **GQN 50-15** | G 2 (DN50) | 152.5 | 513 | 452 | 92 | 104 | 130 | 272 | 50 | 18.2 |
| **GQN 50-17** | G 2 (DN50) | 152.5 | 513 | 452 | 92 | 104 | 130 | 272 | 50 | 19 |

| TYPE | | mm | | | | | | | | | | kg |
|---|---|---|---|---|---|---|---|---|---|---|---|---|
| | DN2 | a1 | fM | j1 | l1 | l2 | l5 | l5 | Lmax | Lmin | p | Weight |
| **GQNM 50-13** | G 2 (DN50) | 152.5 | 493 | 452 | 92 | 104 | 130 | 272 | 568 | 308 | 50 | 18.5 |
| **GQNM 50-15** | G 2 (DN50) | 152.5 | 513 | 452 | 92 | 104 | 130 | 272 | 588 | 328 | 50 | 19.6 |
| **GQNM 50-17** | G 2 (DN50) | 152.5 | 543 | 452 | 92 | 104 | 130 | 272 | 618 | 358 | 50 | 22.3 |

**weights** With cable length: 10 m

## Examples of installations

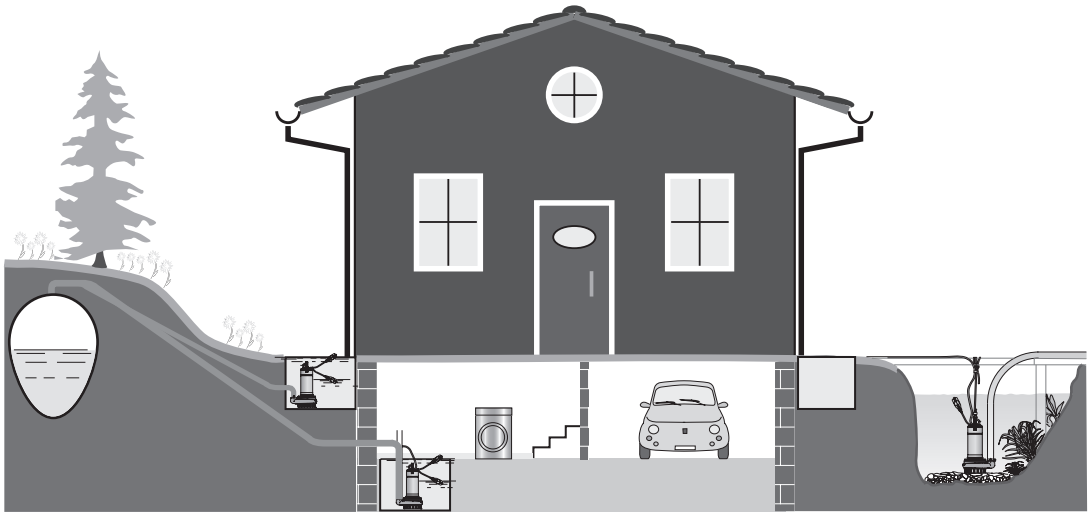

# GM 50

**Coverage chart n ≈ 2900 rpm**

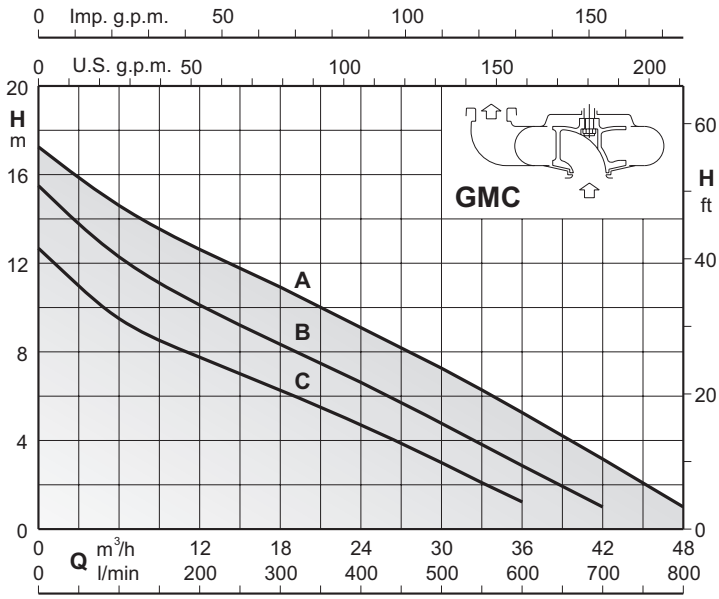


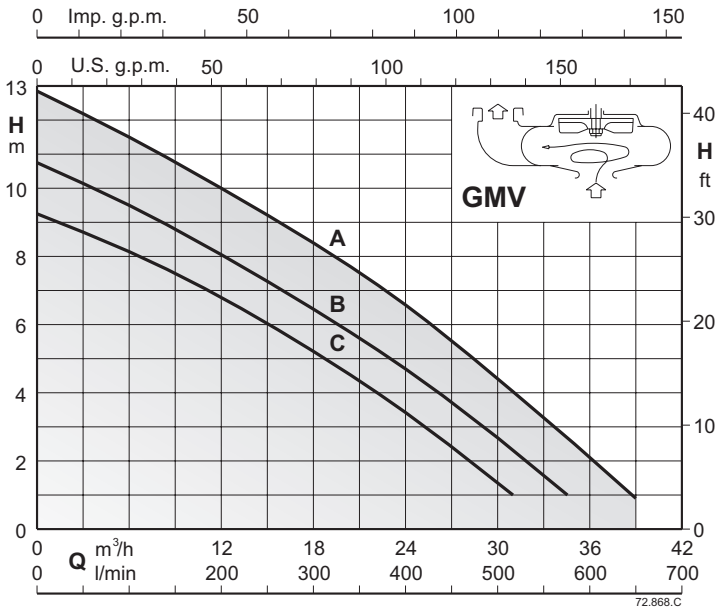


# Submersible sewage and drainage pumps

# GM 50

## Construction

Close coupled electric submersible pumps.
**GMC:**with single-channel impeller.
**GMV:**with free-flow (vortex) impeller
Double seal on the shaft, with interposed oil chamber, protected against dry running.

## Applications

For civil and industrial wastewater that is not aggressive to the pump materials, for dirty water even with solids with a diameter of 45 mm for GMC and 50 mm for GMV.

## Operating conditions

Maximum liquid temperature: 35 °C
pH value: 6-11.
Maximum immersion depth: 10 m (with suitable cable length).
Continuous duty (with submerged motor).

## Motor

2-pole induction motor, 50Hz (n ≈ 2900 1/min).
**GMC, GMV:** three-phase 230V ± 10%
400V ± 10%
2 built-in thermal protectors to be connected to a control box.
H07RN-F cable, 4G1.5 mm²+2x0.5 mm², length 10 m, without plug.
**GMCM, GMVM:** single-phase 230V ± 10%
with float switch and thermal protector.
Incorporated capacitor
H07RN-F cable, 3G1.5 mm², length 10 m, with CEI-UNEL 47166 plug.
Insulation class F.
Protection IP X8 (for continuous immersion).
Triple impregnation humidity-proof dry winding
Constructed in accordance with EN 60034-1, EN 60335-1, EN 60335-2-41.

## Special features on request

Other voltages.
Frequency 60 Hz (as per 60 Hz data sheet).
Motor suitable for operation with frequency converter.

## Designation

Example: GMCM 50-65C
GM = Series
C = with single-channel impeller. V Free-flow impeller (wortex impeller)
M = Single-phase (no indication: three-phase indication)
50 = Delivery port diameter in mm
65 = Delivery port diameter in mm (value for flanged pumps only)
C = Impeller diameter

## Materials

| Components | Materials |
|---|---|
| Pump casing | Cast iron GJL 200 EN 1561 |
| Casing cover | Cast iron GJL 200 EN 1561 |
| Impeller | Cast iron GJL 200 EN 1561 |
| Motor housing | Cast iron GJL 200 EN 1561 |
| Motor cover | Cast iron GJL 200 EN 1561 |
| Shaft | Steel 1.4104 EN 10088 (AISI 430F) |
| Upper mechanical seal | Ceramic / Carbon / NBR |
| Lower mechanical seal | Silicon carbide / Silicon carbide / NBR |
| Seal lubrication oil | Oil for food/pharmaceutical machinery |

# GM 50

## Coverage chart n ≈ 2900 rpm

### Three-phase

| | | | | Q = Flow | | | | | | | | | |
|---|---|---|---|---|---|---|---|---|---|---|---|---|---|
| | | | | m³/h | 0 | 6 | 12 | 18 | 24 | 30 | 36 | 42 | 48 |
| Model | 400V | P2 | | l/min | | 100 | 200 | 300 | 400 | 500 | 600 | 700 | 800 |
| | A | kW | HP | H (m) = Total head | | | | | | | | | |
| GMC 50/CE | 1,9 | 0,75 | 1 | | 12,8 | 9,5 | 8 | 6,5 | 5 | 3 | 1 | - | - |
| GMC 50-65C | 1,9 | 0,75 | 1 | | 12,8 | 9,5 | 8 | 6,5 | 5 | 3 | 1 | - | - |
| GMC 50/BE | 2,7 | 1,1 | 1,5 | | 15,5 | 12,5 | 10 | 8,5 | 6,5 | 5 | 3 | 1 | - |
| GMC 50-65B | 2,7 | 1,1 | 1,5 | | 15,5 | 12,5 | 10 | 8,5 | 6,5 | 5 | 3 | 1 | - |
| GMC 50/AE | 3,8 | 1,5 | 2 | | 17,3 | 14,5 | 12,5 | 11 | 9 | 7,5 | 5,5 | 3 | 1 |
| GMC 50-65A | 3,8 | 1,5 | 2 | | 17,3 | 14,5 | 12,5 | 11 | 9 | 7,5 | 5,5 | 3 | 1 |

### Single-phase

| | | | | | | | Q = Flow | | | | | | | | |
|---|---|---|---|---|---|---|---|---|---|---|---|---|---|---|---|
| | | | | | | | m³/h | 0 | 6 | 12 | 18 | 24 | 30 | 36 | 42 |
| Model | 230V | Capacitor | | P2 | | P1 | l/min | | 100 | 200 | 300 | 400 | 500 | 600 | 700 |
| | A | Vc | uf | kW | HP | kW | H (m) = Total head | | | | | | | | |
| GMCM 50/CE | 4,5 | 450 | 16 | 0,75 | 1 | 1,1 | | 12,8 | 9,5 | 8 | 6,5 | 5 | 3 | 1 | - |
| GMCM 50-65C | 4,5 | 450 | 16 | 0,75 | 1 | 1,1 | | 12,8 | 9,5 | 8 | 6,5 | 5 | 3 | 1 | - |
| GMCM 50/BE | 6,5 | 450 | 25 | 1,1 | 1,5 | 1,5 | | 15,5 | 12,5 | 10 | 8,5 | 6,5 | 5 | 3 | 1 |
| GMCM 50-65B | 6,5 | 450 | 25 | 1,1 | 1,5 | 1,5 | | 15,5 | 12,5 | 10 | 8,5 | 6,5 | 5 | 3 | 1 |

### Three-phase

| | | | | Q = Flow | | | | | | | | |
|---|---|---|---|---|---|---|---|---|---|---|---|---|
| | | | | m³/h | 0 | 6 | 12 | 18 | 24 | 30 | 35 | 39 |
| Model | 400V | P2 | | l/min | | 100 | 200 | 300 | 400 | 500 | 583 | 650 |
| | A | kW | HP | H (m) = Total head | | | | | | | | |
| GMV 50/CE | 1,9 | 0,75 | 1 | | 9,2 | 8 | 7 | 5 | 3,5 | 1,5 | - | - |
| GMV 50-65C | 1,9 | 0,75 | 1 | | 9,2 | 8 | 7 | 5 | 3,5 | 1,5 | - | - |
| GMV 50/BE | 2,7 | 1,1 | 1,5 | | 10,7 | 9,5 | 8 | 6,5 | 4,5 | 2,5 | 1 | - |
| GMV 50-65B | 2,7 | 1,1 | 1,5 | | 10,7 | 9,5 | 8 | 6,5 | 4,5 | 2,5 | 1 | - |
| GMV 50/AE | 3,8 | 1,5 | 2 | | 12,9 | 11,5 | 10 | 8,5 | 6,5 | 4,3 | 2,5 | 1 |
| GMV 50-65A | 3,8 | 1,5 | 2 | | 12,9 | 11,5 | 10 | 8,5 | 6,5 | 4,3 | 2,5 | 1 |

### Single-phase

| | | | | | | | Q = Flow | | | | | | | |
|---|---|---|---|---|---|---|---|---|---|---|---|---|---|---|
| | | | | | | | m³/h | 0 | 6 | 12 | 18 | 24 | 30 | 35 |
| Model | 230V | Capacitor | | P2 | | P1 | l/min | | 100 | 200 | 300 | 400 | 500 | 583 |
| | A | Vc | uf | kW | HP | kW | H (m) = Total head | | | | | | | |
| GMVM 50/CE | 4,5 | 450 | 16 | 0,75 | 1 | 1,1 | | 9,2 | 8 | 7 | 5 | 3,5 | 1,5 | - |
| GMVM 50-65C | 4,5 | 450 | 16 | 0,75 | 1 | 1,1 | | 9,2 | 8 | 7 | 5 | 3,5 | 1,5 | - |
| GMVM 50/BE | 6,5 | 450 | 25 | 1,1 | 1,5 | 1,5 | | 10,7 | 9,5 | 8 | 6,5 | 4,5 | 2,5 | 1 |
| GMVM 50-65B | 6,5 | 450 | 25 | 1,1 | 1,5 | 1,5 | | 10,7 | 9,5 | 8 | 6,5 | 4,5 | 2,5 | 1 |

**P1:** Maximum power input.
**P2:** Rated motor power output.
**Head and power values valid for liquids with density ρ = 1,0 kg/dm3 and kinematic viscosity v = max 20 mm2/sec.** Total head in m

# GM 50

## Dimensions and weights

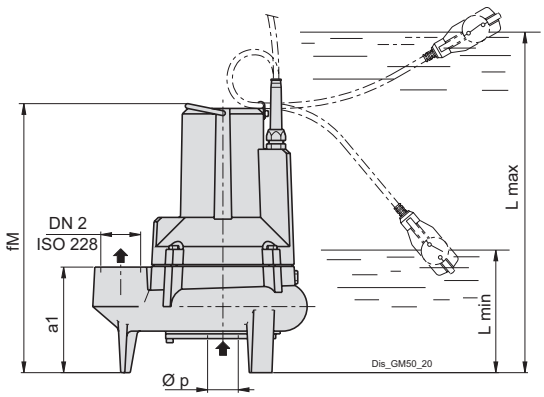


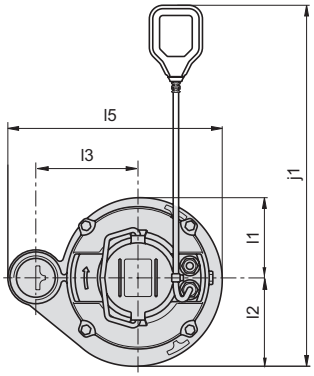


| TYPE | ISO 228 | mm | | | | | | | kg |
|---|---|---|---|---|---|---|---|---|---|
| | DN2 | a1 | fM | l1 | l2 | l5 | l5 | p | Weight |
| **GMV 50/CE** | G 2 | 155 | 395 | 118 | 130 | 150 | 315 | 45 | 26.5 |
| **GMV 50/BE** | G 2 | 155 | 395 | 118 | 130 | 150 | 315 | 45 | 27.5 |
| **GMV 50/AE** | G 2 | 155 | 395 | 118 | 130 | 150 | 315 | 45 | 29.1 |

| TYPE | ISO 228 | mm | | | | | | | | | | kg |
|---|---|---|---|---|---|---|---|---|---|---|---|---|
| | DN2 | a1 | fM | j1 | l1 | l2 | l5 | l5 | Lmax | Lmin | p | Weight |
| **GMVM 50/CE** | G 2 | 155 | 395 | 530 | 118 | 130 | 150 | 315 | 500 | 180 | 45 | 27.2 |
| **GMVM 50/BE** | G 2 | 155 | 395 | 530 | 118 | 130 | 150 | 315 | 500 | 180 | 45 | 29 |

| TYPE | ISO 228 | mm | | | | | | kg |
|---|---|---|---|---|---|---|---|---|
| | DN2 | a1 | fM | l1 | l2 | l5 | l5 | p | Weight |
| **GMC 50/CE** | G 2 | 155 | 395 | 118 | 130 | 150 | 315 | 45 | 27.3 |
| **GMC 50/BE** | G 2 | 155 | 395 | 118 | 130 | 150 | 315 | 45 | 28.6 |
| **GMC 50/AE** | G 2 | 155 | 395 | 118 | 130 | 150 | 315 | 45 | 30.2 |

| TYPE | ISO 228 | mm | | | | | | | | | | kg |
|---|---|---|---|---|---|---|---|---|---|---|---|---|
| | DN2 | a1 | fM | j1 | l1 | l2 | l5 | l5 | Lmax | Lmin | p | Weight |
| **GMCM 50/CE** | G 2 | 155 | 395 | 530 | 118 | 130 | 150 | 315 | 500 | 180 | 45 | 28 |
| **GMCM 50/BE** | G 2 | 155 | 395 | 530 | 118 | 130 | 150 | 315 | 500 | 180 | 45 | 31 |

**weights** With cable length: 10 m

# GM 50

## Dimensions and weights

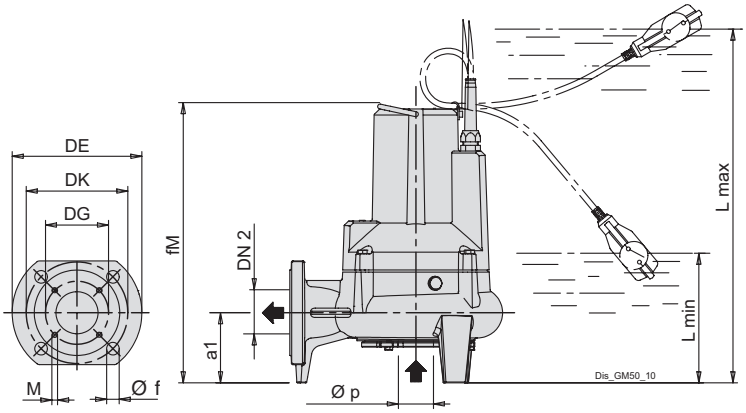


| DN | DE | DK | N. | Ø f | DG | N. | M |
|---|---|---|---|---|---|---|---|
| 65 | 185 | 145 | 4 | 18 | 118 | 4 | M8 |

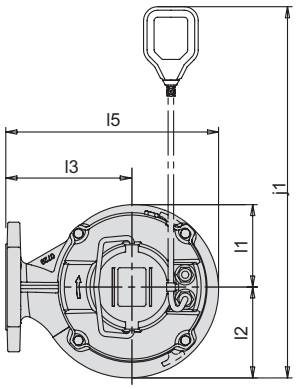


| TYPE | | mm | | | | | | | | kg |
|---|---|---|---|---|---|---|---|---|---|---|
| | DN2 | a1 | fM | h2 | l1 | l2 | l5 | l5 | p | Weight |
| **GMV 50-65C** | 65 | 100 | 400 | - | 118 | 130 | 180 | 304 | 50 | 27.2 |
| **GMV 50-65B** | 65 | 100 | 400 | 180 | 118 | 130 | 180 | 304 | 50 | 28.1 |
| **GMV 50-65A** | 65 | 100 | 400 | 180 | 118 | 130 | 180 | 304 | 50 | 29.8 |

| TYPE | | mm | | | | | | | | | | | kg |
|---|---|---|---|---|---|---|---|---|---|---|---|---|---|
| | DN2 | a1 | fM | h2 | j1 | l1 | l2 | l5 | l5 | Lmax | Lmin | p | Weight |
| **GMVM 50-65C** | 65 | 100 | 400 | 180 | 530 | 118 | 130 | 180 | 304 | 505 | 85 | 50 | 29.4 |
| **GMVM 50-65B** | 65 | 100 | 400 | 180 | 530 | 118 | 130 | 180 | 304 | 505 | 85 | 50 | 29.7 |

| TYPE | | mm | | | | | | | | kg |
|---|---|---|---|---|---|---|---|---|---|---|
| | DN2 | a1 | fM | h2 | l1 | l2 | l5 | l5 | p | Weight |
| **GMC 50-65C** | 65 | 100 | 400 | 180 | 118 | 130 | 180 | 304 | 45 | 28 |
| **GMC 50-65B** | 65 | 100 | 400 | 180 | 118 | 130 | 180 | 304 | 45 | 29.1 |
| **GMC 50-65A** | 65 | 100 | 400 | 180 | 118 | 130 | 180 | 304 | 45 | 30.7 |

| TYPE | | mm | | | | | | | | | | | kg |
|---|---|---|---|---|---|---|---|---|---|---|---|---|---|
| | DN2 | a1 | fM | h2 | j1 | l1 | l2 | l5 | l5 | Lmax | Lmin | p | Weight |
| **GMCM 50-65C** | 65 | 100 | 400 | 180 | 530 | 118 | 130 | 180 | 304 | 505 | 85 | 45 | 28.7 |
| **GMCM 50-65B** | 65 | 100 | 400 | 180 | 530 | 118 | 130 | 180 | 304 | 505 | 85 | 45 | 30.6 |

**weights** With cable length: 10 m

# GM 50

## Dimensions with duck foot coupling

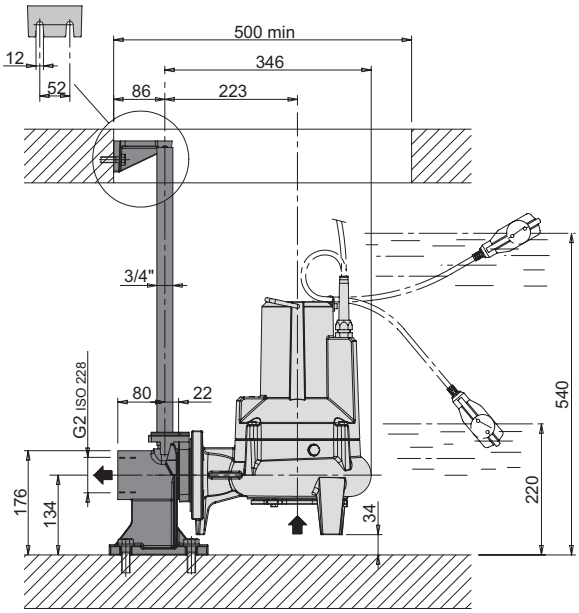


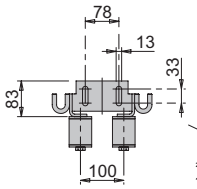


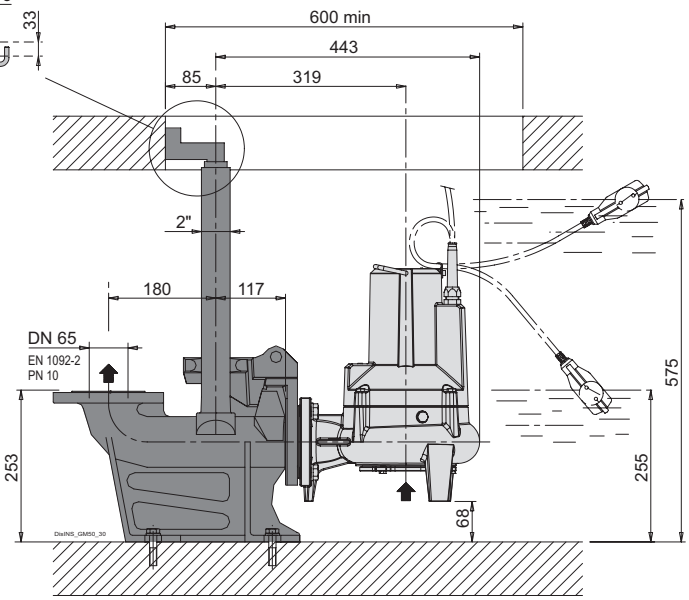


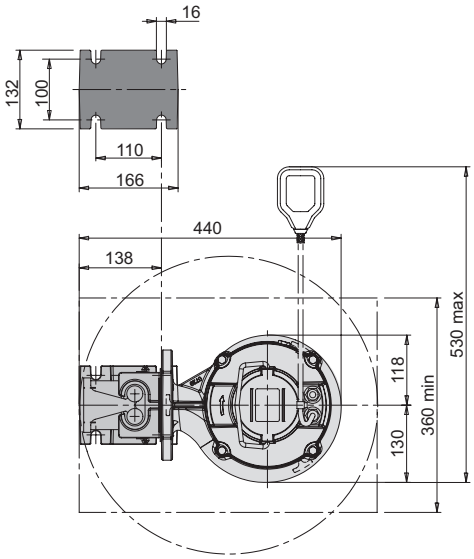


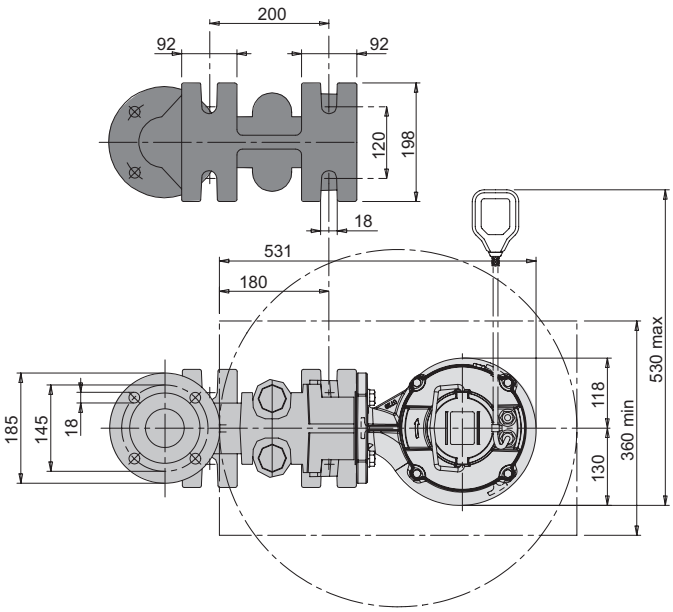

ed. 03/2025

# GQG

(patented system)

**Coverage chart n ≈ 2900 rpm**

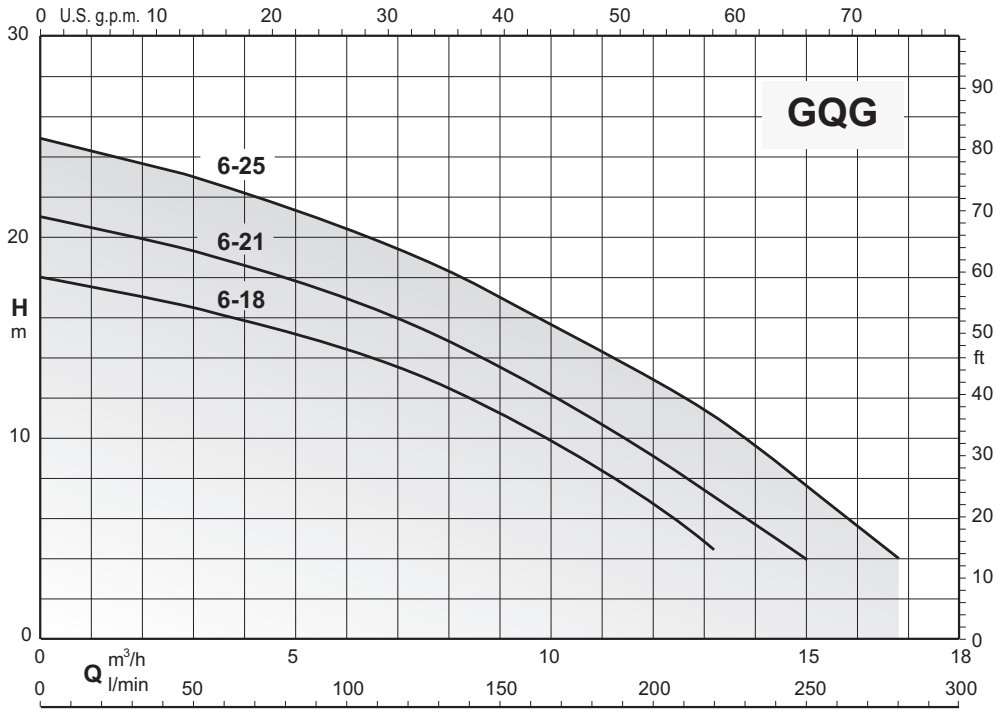


# Submersible pumps with high power grinder

# GQG

calpeda®

## Construction

Submersible pumps with high-power grinding system, with threaded horizontal delivery port G 1 1/2 and flanged DN 32 PN 6.
Double mechanical shaft seal with interposed oil chamber, to protect against dry-running.

## Applications

To move water containing long filamentary materials, paper or textile material.
They are particularly suitable for use in domestic, residential and industrial installations
Solid passage Ø 6 mm

## Operating conditions

Maximum liquid temperature: 35 °C
Immersion depth: 5 m max
Minimum immersion depth: 300 mm.
Continuous duty (with submerged motor).

## Motor

2-pole induction motor, 50Hz (n ≈ 2900 1/min).
**GQG:** three-phase 230V ± 10%
400V ± 10%
**GQGM:** single-phase 230V ± 10%
With switch and float, thermal protector and control panel with starting capacitors.
H07RN-F cable, 4G1 mm², (4G1.5 mm² for GMGM 6-25), length 10 m.
Insulation class F.
Protection IP X8 (for continuous immersion).
Triple impregnation humidity-proof dry winding
Constructed in accordance with EN 60034-1, EN 60335-1, EN 60335-2-41.

## Special features on request

Other voltages.
Frequency 60 Hz (as per 60 Hz data sheet).
Other mechanical seal.
Cable length 20 m.
Vertical magnetic float switch.
Three-phase pumps with incorporated float switch.

## Designation

Example: GQGM 6-21
GQ = Series
G = Submersible pumps with high power grinder
M = Single-phase (no indication: three-phase)
6 = Passage of solids Ø mm
21 = Total head in m indoors

## Materials

| Components | Materials |
|---|---|
| Pump casing | Cast iron GJL 200 EN 1561 |
| Impeller | Cast iron GJL 200 EN 1561 |
| Casing cover | Cast iron GJL 200 EN 1561 |
| Rotating blade | Steel 1.4125 EN 10088 (AISI 440C) |
| Fixed cutting blade | Steel 1.4125 EN 10088 (AISI 440C) |
| motor jacket | Chrome-nickel steel 1.4301 EN 10088 (AISI 304) |
| Jacket cover | Chrome-nickel steel 1.4301 EN 10088 (AISI 304) |
| Handle | Polypropylene (with frame made of 1.4301 EN 10088 (AISI 304)) |
| Shaft | Chrome-nickel steel 1.4305 EN 10088 (AISI 303) |
| Upper mechanical seal | Ceramic / Carbon / NBR |
| Lower mechanical seal | Ceramic / Carbon / NBR |
| Seal lubrication oil | Oil for food/pharmaceutical machinery |

## Coverage chart n ≈ 2900 rpm

### Three-phase

| | | | | Q = Flow | | | | | | | | |
|---|---|---|---|---|---|---|---|---|---|---|---|---|
| | | | | m³/h | 0 | 3 | 6 | 9 | 12 | 13,2 | 15 | 16,8 |
| Model | 400V | P2 | | l/min | | 50 | 100 | 150 | 200 | 220 | 250 | 280 |
| | A | kW | HP | H (m) = Total head | | | | | | | | |
| GQG 6-18 | 2,3 | 0,9 | 1,2 | | 18 | 16,5 | 14,5 | 11,2 | 6,5 | 4,5 | - | - |
| GQG 6-21 | 2,8 | 1,1 | 1,5 | | 21 | 19,2 | 17 | 13,5 | 9 | 7 | 4 | - |
| GQG 6-25 | 3,8 | 1,5 | 2 | | 25 | 23 | 20,5 | 17 | 13 | 11 | 7,8 | 4 |

### Single-phase

| | | | | | | | Q = Flow | | | | | | | | |
|---|---|---|---|---|---|---|---|---|---|---|---|---|---|---|---|
| | | | | | | | m³/h | 0 | 3 | 6 | 9 | 12 | 13,2 | 15 | 16,8 |
| Model | 230V | Capacitor | | P2 | | P1 | l/min | | 50 | 100 | 150 | 200 | 220 | 250 | 280 |
| | A | Vc | uf | kW | HP | kW | H (m) = Total head | | | | | | | | |
| GQGM 6-18 | 7 | 450 | 30+80 | 0,9 | 1,2 | 1,3 | | 18 | 16,5 | 14,5 | 11,2 | 6,5 | 4,5 | - | - |
| GQGM 6-21 | 7,5 | 450 | 30+80 | 1,1 | 1,5 | 1,5 | | 21 | 19,2 | 17 | 13,5 | 9 | 7 | 4 | - |
| GQGM 6-25 | 9,5 | 450 | 30+80 | 1,5 | 2 | 2 | | 25 | 23 | 20,5 | 17 | 13 | 11 | 7,8 | 4 |

**P1:** Maximum power input.
**P2:** Rated motor power output.
**ρ:** Density 1000kg/m³
**υ:** Kinematic viscosity max 20 mm2/sec.

# GQG

## Dimensions and weights

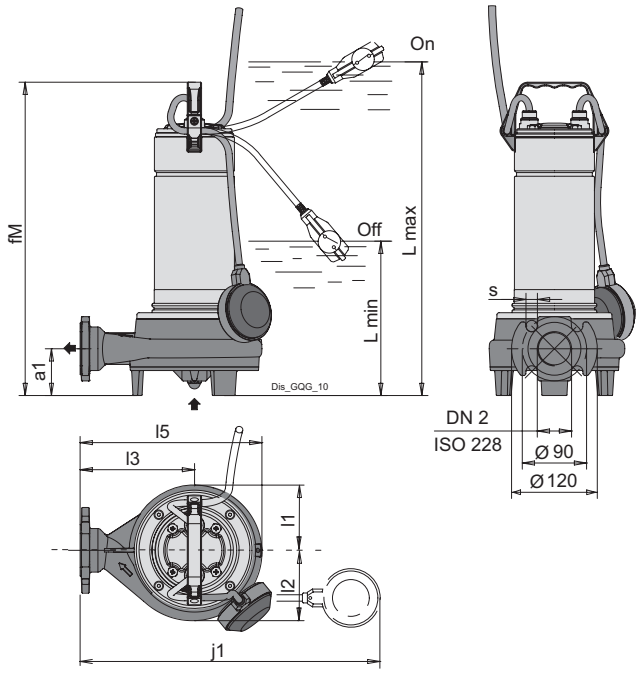


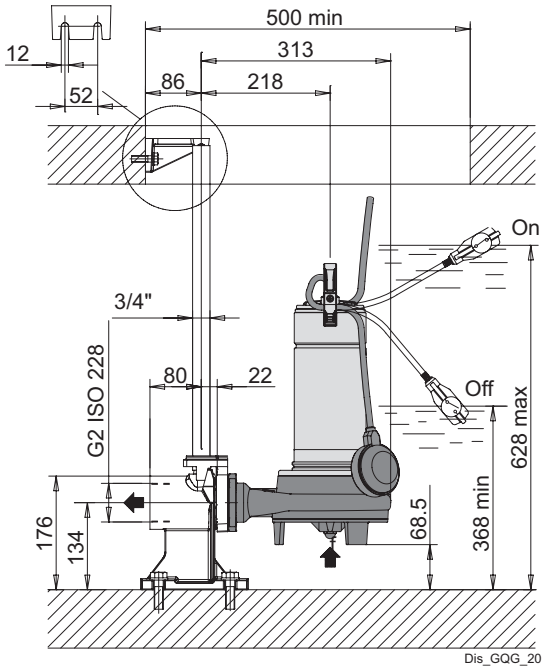


GQGM
Control with box starting capacitors

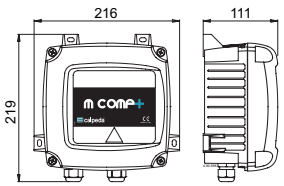


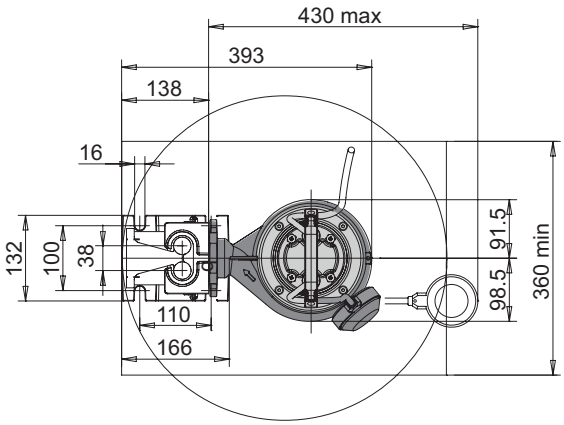


| TYPE | ISO 228 | mm | | | | | | | kg |
|---|---|---|---|---|---|---|---|---|---|
| | DN2 | a1 | fM | h2 | l1 | l2 | l5 | s | Weight |
| **GQG 6-18** | G1 1/2 (DN32) | 65 | 485 | 160 | 91 | 99 | 255 | 16 | 18.4 |
| **GQG 6-21** | G1 1/2 (DN32) | 65 | 485 | 160 | 91 | 99 | 255 | 16 | 18.6 |
| **GQG 6-25** | G1 1/2 (DN32) | 65 | 485 | 160 | 91 | 99 | 255 | 16 | 18.7 |

| TYPE | ISO 228 | mm | | | | | | | | | kg |
|---|---|---|---|---|---|---|---|---|---|---|---|
| | DN2 | a1 | fM | h2 | l1 | l2 | l5 | Lmax | Lmin | s | Weight |
| **GQGM 6-18** | G1 1/2 (DN32) | 65 | 485 | 160 | 91 | 99 | 255 | 560 | 300 | 16 | 21.8 |
| **GQGM 6-21** | G1 1/2 (DN32) | 65 | 485 | 160 | 91 | 99 | 255 | 560 | 300 | 16 | 21.8 |
| **GQGM 6-25** | G1 1/2 (DN32) | 65 | 485 | 160 | 91 | 99 | 255 | 560 | 300 | 16 | 22 |

**weights** With cable length: 10 m

# GK

calpeda®

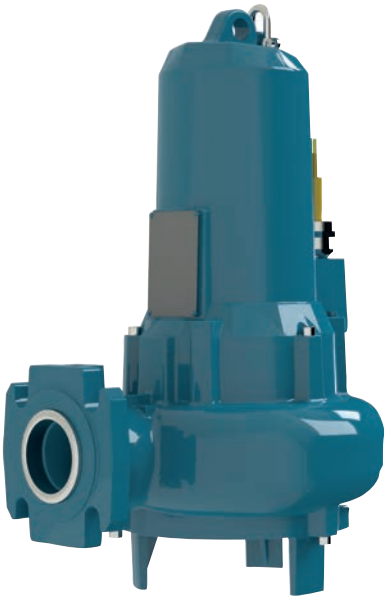

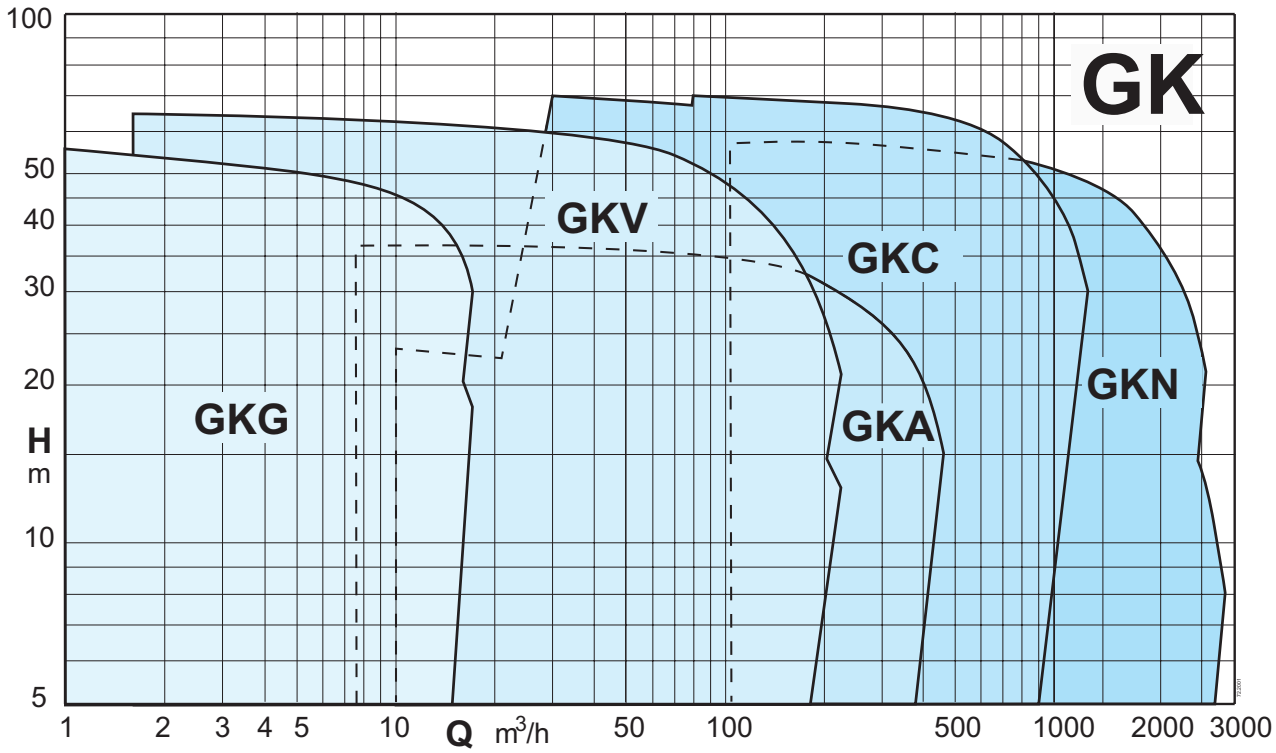


# Submersible pumps

# GK

Electric pumps of the GK series feature three different hydraulics with the following characteristics.

*Page*

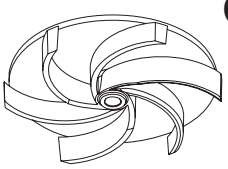

## GKV

**RETRACTED VORTEX IMPELLER**
The impeller offers reliability against clogging due to the feature of wide through passages, and a good resistance to wear thanks to the absence of shimming. The versatility of use compensates for this impellers somewhat lower efficiency. The impeller can be reduced in dimension to offer different characteristics.
For water containing a large amount of solids and long fibre, sewage with a high gas and sludge content.

*Page*

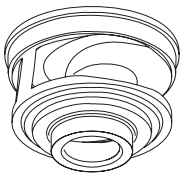

## GKC

**SINGLE-CHANNEL IMPELLER**
It offers reliability against clogging and features wide through sections and a good resistance to wear, low mechanical action on the fluid, high hydraulic efficiency.
Particularly suitable for clean water, water containing solid and fibrous solids, cloacal water, sewage and sludge.
Low vibrations thanks to the dynamically balanced impeller.

*Page*

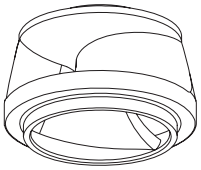

## GKN

**DOUBLE CHANNEL IMPELLER**
It offers reliability against clogging and features wide through sections and a good resistance to wear, low mechanical action on the fluid, high hydraulic efficiency.
Particularly suitable for clean water, water containing solid and fibrous solids, cloacal water, sewage and sludge.
Low vibrations thanks to the dynamically balanced impeller.

*Page*

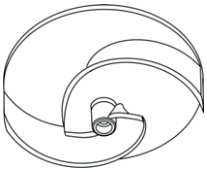

## GKA

**OPEN TWIN BLADE IMPELLER**
It offers reliability against clogging and features and a good resistance to wear, low mechanical action on the fluid, high hydraulic efficiency.
Particularly suitable for clean water, water containing solid and fibrous solids, cloacal water, sewage and sludge.
Low vibrations thanks to the dynamically balanced impeller.

*Page*

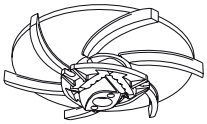

## GKG

**SHREDDER**
Made of very hard stainless steel, the shape of the shredder ensures long-life and fade-free shredding capacity.
Waste water disposal from gas stations, community housing and neighbourhoods.
No particular tools are required to replace this part.

# GK

The electric submersible sewage pumps have been specially designed to operate submerged in the pumped fluid.
The hydraulic section is close coupled to the electric motor making the pumping unit compact, easy to install and reliable in operation.
The pumps are essential in depuration systems and are widely used in the sewage handling facilities of industry and local communities.
The GK series electric pumps are designed to pump sewage containing gas, compacted solids and long fibrous material.
The pumps can be supplied for fixed or submersible installation with base frame.
The design has paid particular attention to achieving a good overall efficiency to ensure that the pumps are as cheap as possible to run.

**MOTOR**
Asynchronous, three-phase with squirrel-cage rotor.
The motor is cooled by the fluid in which it is submerged or by a forced cooling system.
The motor is separated from the pump by a large chamber partially filled with oil
that acts as a lubricant for the mechanical seals and as a heat exchanger.
Ensure compliance with the minimum head value given with the dimensions of each individual electric pump in order to ensure that the motor is correctly cooled, the exception being made for motors with forced cooling.

**SUPPORTS**
The shaft of the motor, on the extension of which the impeller is mounted, is guided by two bearings prelubricated with grease; the lower one supports the axial thrust.
The rotating assembly is very compact, with a short overhung pump shaft which reduces bearing loads and ensures reliability and long life.

**MECHANICAL SEALS**
The double mechanical seal (mounted in series) is a dual protection safeguarding the electric motor.
If the seal on the pump side becomes faulty, the motor will not be damaged thanks to the second seal on the motor side.
These seals are made of particularly suitable materials able to withstand heavy-duty conditions; the pump side seal is made with abrasionproof materials.

**SAFE OPERATION**
- The conductivity sensor in the oil chamber warns if there is water and transmits the relative signal to the appropriately preset electric panel.
This checks that the mechanical seals on the pump side operate correctly.
- The motor is equipped with thermal probes connected in series in the stator winding.
Should over-temperature conditions occur, the probes automatically cut off the power.

## STANDARD INSTALLATIONS

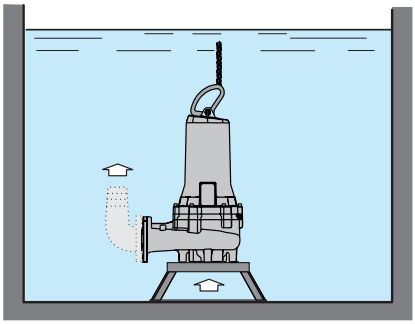

**Mobile and emergency immersed installation with support foot**
Version only recommended with electric pump installed on a solid and flat support surface and with flexible delivery pipe, particularly suitable for:
- all occasional or exceptional uses
- use on site or where mobility is required
- renovation of existing stations with architectural constraints.

The support frame, flexible delivery pipe bend, chain, etc. are available.

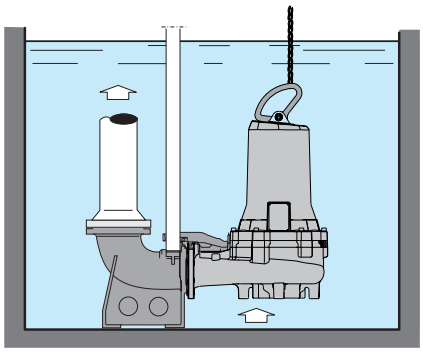

**Fixed installation with guide chute and automatic coupling base.**
It is the most suitable installation for fixed lifting stations. No special building infrastructures are required and the system is easy to build. The quick coupling allows quick and easy extraction and subsequent repositioning
of the electric pump in the tank, allowing ordinary maintenance or exceptional interventions to be performed in complete safety without having to enter the collection tank. The coupling foot, guide pipes, chain, etc. are available for this installation.

**IN A DRY CHAMBER**
It is the horizontal or vertical installation that requires a dry chamber, adjacent to the liquid collection tank, to house the electric pump unit.
Compared to traditional non-submersible machines, it has maximum operating safety and absence of risks even in the event that the dry chamber is submerged in liquid. Support stands are available.

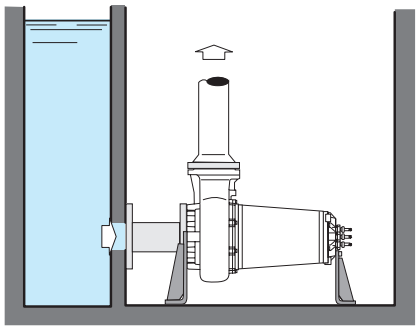

**HORIZONTAL**
With outlet vent pointing upwards. The electric pump is attached with support brackets.
This arrangement requires a limited number of special pieces. The suction is horizontal and the delivery is vertical with a limited overall height.

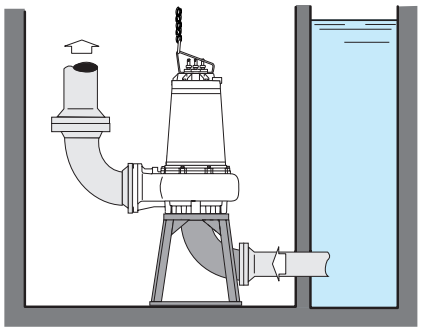

**VERTICAL**
This arrangement allows for maximum ease of inspection and maintenance, the suction and delivery are horizontal and it ensures minimum overall dimensions in plan configuration.

ed. 07/2025

# GKV

calpeda®

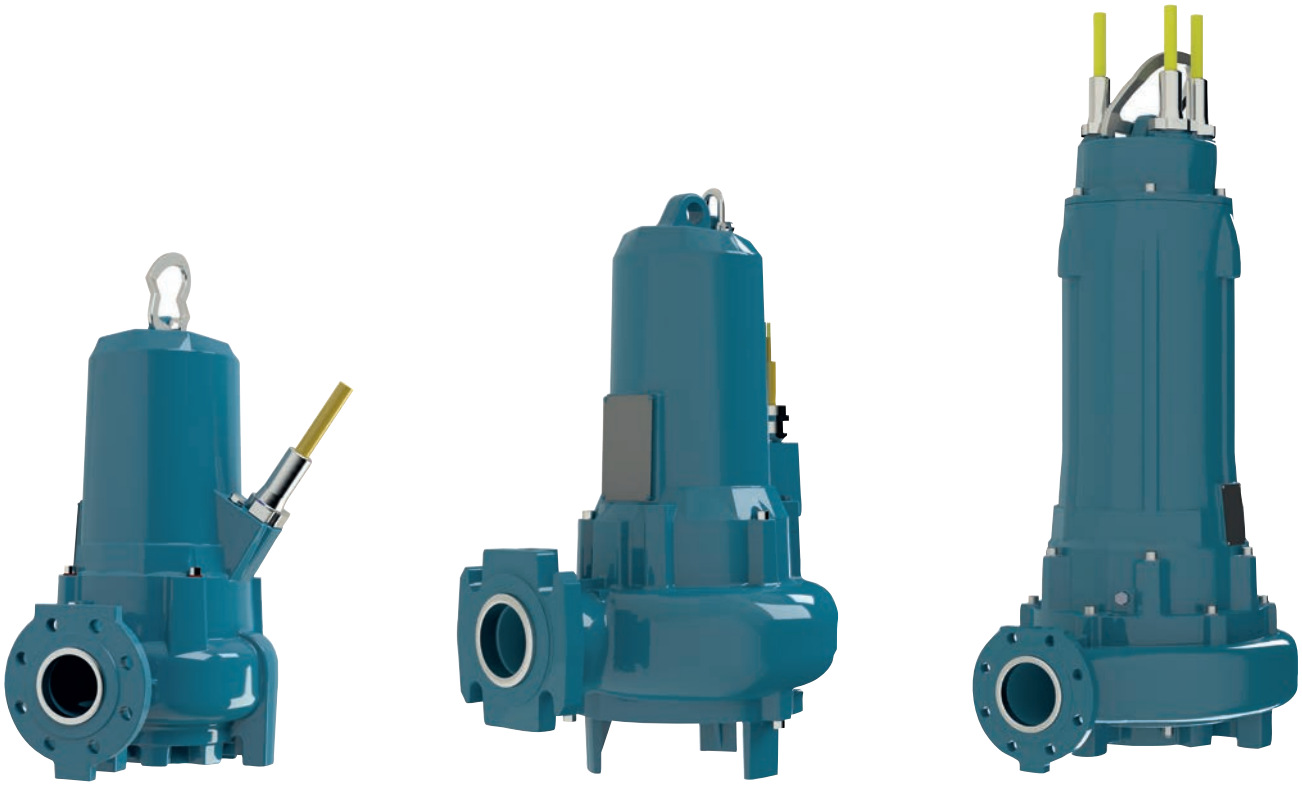

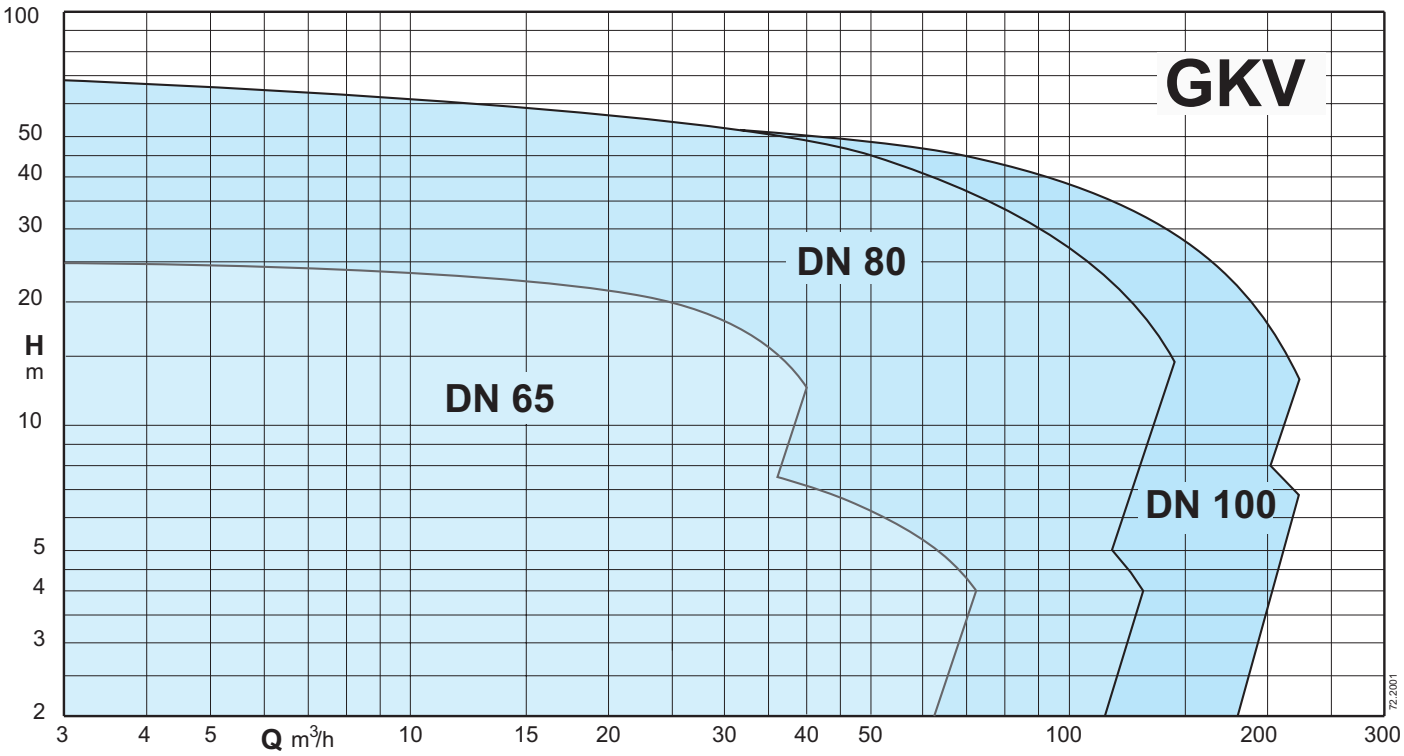


## Submersible pumps with vortex impeller

# GKV

calpeda®

## Construction

Submersible pumps with vortex impeller.
The impeller offers reliability against clogging due to the feature of wide through passages, and a good resistance to wear thanks to the absence of shimming.
The versatility of use compensates for this impellers somewhat lower efficiency.
The impeller can be reduced in dimension to offer different characteristics.
Delivery port DN 65-80-100.

## Applications

For waste water and sewage with suspended bodies and with the presence of filamentous bodies, they are particularly suitable for the emptying of wells or primary collection tanks and septic tanks in domestic, residential and industrial installations.
Solid passage from 40 to 100mm

## Operating conditions

Liquid temperature: from 0°C to +40°C.
Maximum immersion depth: 20m (with cable of suitable length).
Maximum working pressure: 80 m.w.c.
pH of the liquid to be lifted: 4 ÷ 10
Continuous service (with water at minimum immersion level).

## Materials

Pump casing: cast iron EN-GJL250 UNI-EN 1561-11
Impeller: cast iron EN-GJL250 UNI-EN 1561-11
Motor casing: cast iron EN-GJL250 UNI-EN 1561-11
Shaft: stainless steel X20Cr13 (AISI420)
Motor side mechanical seal: graphite/ceramic
Pump side mechanical seal: silicon carbide/ceramic

## Motor

Induction motor with 2, 4 or 6 poles, 50Hz.
Three-phase version: 400V ± 10%up to 4.8 kW
400/690V ± 10%from 5.8 kW
Isolation class: H
Degree of protection: IP 68
Max number of starts per hour:
- 20 up to 5 kW
- 15 up to 10 kW
- 10 for higher powers

Cable: length 10m
Direction of rotation: clockwise top view
Motor suitable for operation with frequency converter.

## Special features on request

(Check feasibility according to the model with our Technical Sales Office).
ATEX versions complying with EN60079-0 - EN60079-1 type I M2 Ex db h I Mb, II 2G Ex db h IIB T4 Gb.
Impeller in stainless steel AISI 316 or bronze.
Bronze impeller seat ring.
Cable length up to 40 m
Other mechanical seal.
Higher or lower liquid or ambient temperatures.
Ceramic coating.
Internal anti-erosion coating, external anti-corrosion.

## Designation

GKV4 65-55D-0021F-X
GK = Series
V = Vortex impeller
4 = Number of poles
65 = Delivery port diameter in mm
55 = Free passage in mm
D = Impeller trim
0021 = Motor size (P2 = 2,1 kW)
F = Size of electric motor flanging
X = Versione ATEX

## Technical data

| TYPE | Version | Dry chamber version | | Probes | | Cable | | Class | Duck foot coupling | Submersible pump rest | Dry chamber pump rest | Dry chamber pump support |
|---|---|---|---|---|---|---|---|---|---|---|---|---|
| | ATEX | Vertical | Horizontal | thermal | conductivity | NSSHOU-J | H07RN-F | Isolation /Efficiency | | | | |
| GKV4 65-55G-0016F | o | – | – | o | o | – | • | H / IE3 | SAK 65-65-2 | - | - | - |
| GKV4 65-55D-0021F | o | – | – | o | o | – | • | H / IE3 | SAK 65-65-2 | - | - | - |
| GKV4 65-55A-0026F | o | – | – | o | o | – | • | H / IE3 | SAK 65-65-2 | - | - | - |
| GKV2 65-40L-0020F | o | – | – | o | o | – | • | H / IE3 | SAK 65-65-2 | - | - | - |
| GKV2 65-40G-0025F | o | – | – | o | o | – | • | H / IE3 | SAK 65-65-2 | - | - | - |
| GKV2 65-40A-0031F | o | – | – | o | o | – | • | H / IE3 | SAK 65-65-2 | - | - | - |
| GKV2 65-40D-0031F | o | – | – | o | o | – | • | H / IE3 | SAK 65-65-2 | - | - | - |
| GKV6 80-80P-0015H | o | # | # | • | • | • | – | H / IE3 | SAK 80-80-2 | APK 80 | APCK 80 | SOK80/N3 |
| GKV6 80-80M-0015H | o | # | # | • | • | • | – | H / IE3 | SAK 80-80-2 | APK 80 | APCK 80 | SOK80/N3 |
| GKV6 80-80I-0015H | o | # | # | • | • | • | – | H / IE3 | SAK 80-80-2 | APK 80 | APCK 80 | SOK80/N3 |
| GKV6 80-80E-0015H | o | # | # | • | • | • | – | H / IE3 | SAK 80-80-2 | APK 80 | APCK 80 | SOK80/N3 |
| GKV6 80-80A-0015H | o | # | # | • | • | • | – | H / IE3 | SAK 80-80-2 | APK 80 | APCK 80 | SOK80/N3 |
| GKV4 80-80P-0016H | o | # | # | • | • | • | – | H / IE3 | SAK 80-80-2 | APK 80 | APCK 80 | SOK80/N3 |
| GKV4 80-80M-0016H | o | # | # | • | • | • | – | H / IE3 | SAK 80-80-2 | APK 80 | APCK 80 | SOK80/N3 |
| GKV4 80-80I-0021H | o | # | # | • | • | • | – | H / IE3 | SAK 80-80-2 | APK 80 | APCK 80 | SOK80/N3 |
| GKV4 80-80H-0029H | o | # | # | • | • | • | – | H / IE3 | SAK 80-80-2 | APK 80 | APCK 80 | SOK80/N3 |
| GKV4 80-80E-0037H | o | # | # | • | • | • | – | H / IE3 | SAK 80-80-2 | APK 80 | APCK 80 | SOK80/N3 |
| GKV4 80-80C-0046H | o | # | # | • | • | • | – | H / IE3 | SAK 80-80-2 | APK 80 | APCK 80 | SOK80/N3 |
| GKV4 80-80A-0058H | o | # | # | • | • | • | – | H / IE3 | SAK 80-80-2 | APK 80 | APCK 80 | SOK80/N3 |
| GKV2 80-80V-0048H | o | # | # | • | • | • | – | H / IE3 | SAK 80-80-2 | APK 80 | APCK 80 | SOK80/N3 |
| GKV2 80-80X-0048H | o | # | # | • | • | • | – | H / IE3 | SAK 80-80-2 | APK 80 | APCK 80 | SOK80/N3 |
| GKV2 80-80Z-0048H | o | # | # | • | • | • | – | H / IE3 | SAK 80-80-2 | APK 80 | APCK 80 | SOK80/N3 |
| GKV2 80-80N-0065H | o | # | # | • | • | • | – | H / IE3 | SAK 80-80-2 | APK 80 | APCK 80 | SOK80/N3 |
| GKV2 80-80P-0065H | o | # | # | • | • | • | – | H / IE3 | SAK 80-80-2 | APK 80 | APCK 80 | SOK80/N3 |
| GKV2 80-80Q-0065H | o | # | # | • | • | • | – | H / IE3 | SAK 80-80-2 | APK 80 | APCK 80 | SOK80/N3 |
| GKV2 80-80R-0065H | o | # | # | • | • | • | – | H / IE3 | SAK 80-80-2 | APK 80 | APCK 80 | SOK80/N3 |
| GKV2 80-80T-0065H | o | # | # | • | • | • | – | H / IE3 | SAK 80-80-2 | APK 80 | APCK 80 | SOK80/N3 |
| GKV2 80-80W-0048H | o | # | # | • | • | • | – | H / IE3 | SAK 80-80-2 | APK 80 | APCK 80 | SOK80/N3 |
| GKV2 80-80W-0065H | o | # | # | • | • | • | – | H / IE3 | SAK 80-80-2 | APK 80 | APCK 80 | SOK80/N3 |

• = Standard  o = Optional  # = Version with oil chamber
- = Not present

# = In case of operation in a dry chamber or with a low level of the pumped liquid, it is necessary to introduce the cooling oil according to the quantities indicated in the use and maintenance manual

# GKV

calpeda®

## Technical data

| TYPE | Version | Dry chamber version | | Probes | | Cable | | Class | Duck foot coupling | Submersible pump rest | Dry chamber pump rest | Dry chamber pump support |
|---|---|---|---|---|---|---|---|---|---|---|---|---|
| | ATEX | Vertical | Horizontal | thermal | conductivity | NSSHOU-J | H07RN-F | Isolation | | | | |
| GKV2 80-80W-0090H | o | # | # | • | • | • | – | H / IE3 | SAK 80-80-2 | APK 80 | APCK 80 | SOK80/N3 |
| GKV2 80-80T-0090H | o | # | # | • | • | • | – | H / IE3 | SAK 80-80-2 | APK 80 | APCK 80 | SOK80/N3 |
| GKV2 80-80R-0090H | o | # | # | • | • | • | – | H / IE3 | SAK 80-80-2 | APK 80 | APCK 80 | SOK80/N3 |
| GKV2 80-80Q-0090H | o | # | # | • | • | • | – | H / IE3 | SAK 80-80-2 | APK 80 | APCK 80 | SOK80/N3 |
| GKV2 80-80P-0090H | o | # | # | • | • | • | – | H / IE3 | SAK 80-80-2 | APK 80 | APCK 80 | SOK80/N3 |
| GKV2 80-80N-0090H | o | # | # | • | • | • | – | H / IE3 | SAK 80-80-2 | APK 80 | APCK 80 | SOK80/N3 |
| GKV2 80-80R-0125L | o | # | # | • | • | • | – | H / IE3 | SAK 80-80-2 | APK 80 | APCK 80 | SOK80/N3 |
| GKV2 80-80P-0165L | o | # | # | • | • | • | – | H / IE3 | SAK 80-80-2 | APK 80 | APCK 80 | SOK80/N3 |
| GKV2 80-80L-0165L | o | # | # | • | • | • | – | H / IE3 | SAK 80-80-2 | APK 80 | APCK 80 | SOK80/N3 |
| GKV2 80-80G-0165L | o | # | # | • | • | • | – | H / IE3 | SAK 80-80-2 | APK 80 | APCK 80 | SOK80/N3 |
| GKV2 80-80D-0165L | o | # | # | • | • | • | – | H / IE3 | SAK 80-80-2 | APK 80 | APCK 80 | SOK80/N3 |
| GKV2 80-80A-0165L | o | # | # | • | • | • | – | H / IE3 | SAK 80-80-2 | APK 80 | APCK 80 | SOK80/N3 |
| GKV6 100-100E-0040L | o | # | # | • | • | • | – | H / IE3 | SAK 100-100-2A | APK 100 | APCK 100 | SOK100/N3 |
| GKV6 100-100C-0040L | o | # | # | • | • | • | – | H / IE3 | SAK 100-100-2A | APK 100 | APCK 100 | SOK100/N3 |
| GKV6 100-100A-0040L | o | # | # | • | • | • | – | H / IE3 | SAK 100-100-2A | APK 100 | APCK 100 | SOK100/N3 |
| GKV4 100-100R-0021H | o | # | # | • | • | • | – | H / IE3 | SAK 100-100-2A | APK 100 | APCK 100 | SOK100/N3 |
| GKV4 100-100N-0029H | o | # | # | • | • | • | – | H / IE3 | SAK 100-100-2A | APK 100 | APCK 100 | SOK100/N3 |
| GKV4 100-100L-0037H | o | # | # | • | • | • | – | H / IE3 | SAK 100-100-2A | APK 100 | APCK 100 | SOK100/N3 |
| GKV4 100-100F-0046H | o | # | # | • | • | • | – | H / IE3 | SAK 100-100-2A | APK 100 | APCK 100 | SOK100/N3 |
| GKV4 100-100A-0058H | o | # | # | • | • | • | – | H / IE3 | SAK 100-100-2A | APK 100 | APCK 100 | SOK100/N3 |
| GKV4 100-100E-0075L | o | # | # | • | • | • | – | H / IE3 | SAK 100-100-2A | APK 100 | APCK 100 | SOK100/N3 |
| GKV4 100-100C-0105L | o | # | # | • | • | • | – | H / IE3 | SAK 100-100-2A | APK 100 | APCK 100 | SOK100/N3 |
| GKV4 100-100A-0125L | o | # | # | • | • | • | – | H / IE3 | SAK 100-100-2A | APK 100 | APCK 100 | SOK100/N3 |
| GKV2 100-80L-0260N | o | # | – | • | • | • | – | H / IE3 | SAK 100-100-2A | APK 100A | APCK 100 | - |
| GKV2 100-80I-0260N | o | # | – | • | • | • | – | H / IE3 | SAK 100-100-2A | APK 100A | APCK 100 | - |
| GKV2 100-80H-0350N | o | # | – | • | • | • | – | H / IE3 | SAK 100-100-2A | APK 100A | APCK 100 | - |
| GKV2 100-80G-0350N | o | # | – | • | • | • | – | H / IE3 | SAK 100-100-2A | APK 100A | APCK 100 | - |
| GKV2 100-80F-0350N | o | # | – | • | • | • | – | H / IE3 | SAK 100-100-2A | APK 100A | APCK 100 | - |
| GKV2 100-80E-0350N | o | # | – | • | • | • | – | H / IE3 | SAK 100-100-2A | APK 100A | APCK 100 | - |
| GKV2 100-80D-0350N | o | # | – | • | • | • | – | H / IE3 | SAK 100-100-2A | APK 100A | APCK 100 | - |

• = Standard
- = Not present
o = Optional
# = Version with oil chamber
# = In case of operation in a dry chamber or with a low level of the pumped liquid, it is necessary to introduce the cooling oil according to the quantities indicated in the use and maintenance manual

# GKV

calpeda®

## Performance

### n ≈ 1450 1/min

| | | | Q = Flow | | | | | | | | | | | | | | |
|---|---|---|---|---|---|---|---|---|---|---|---|---|---|---|---|---|---|
| | | | m³/h | 0 | 2,9 | 3,6 | 7,2 | 10,8 | 14,4 | 18 | 21,5 | 25,2 | 28,8 | 32,4 | 36 | 54 | 72 |
| Model | 400V | P2 | l/min | 0 | 48,33 | 60 | 120 | 180 | 240 | 300 | 358 | 420 | 480 | 540 | 600 | 900 | 1200 |
| | A | kW | H (m) = Total head | | | | | | | | | | | | | | |
| GKV4 65-55G-0016F | 3,7 | 1,6 | | 7,8 | 7,7 | 7,7 | 7,5 | 7,3 | 7,1 | 6,9 | 6,6 | 6,3 | 5,9 | 5,5 | 5,1 | 2,7 | - |
| GKV4 65-55D-0021F | 5,1 | 2,1 | | 9,3 | 9,1 | 9,1 | 8,9 | 8,6 | 8,4 | 8,1 | 7,9 | 7,6 | 7,4 | 7,1 | 6,8 | 4,8 | - |
| GKV4 65-55A-0026F | 5,8 | 2,6 | | 10,6 | 10,5 | 10,4 | 10,2 | 10 | 9,9 | 9,7 | 9,4 | 9,2 | 8,9 | 8,7 | 8,4 | 6,5 | 4,1 |

### n ≈ 2850 1/min

| | | | Q = Flow | | | | | | | | | | | | | | | | |
|---|---|---|---|---|---|---|---|---|---|---|---|---|---|---|---|---|---|---|---|
| | | | m³/h | 0 | 2,2 | 2,5 | 2,9 | 3,2 | 3,6 | 7,2 | 10,8 | 14,4 | 18 | 21,5 | 25,2 | 28,8 | 32,4 | 36 | 39,6 |
| Model | 400V | P2 | l/min | | 36,66 | 41,66 | 48,33 | 53,33 | 60 | 120 | 180 | 240 | 300 | 358 | 420 | 480 | 540 | 600 | 660 |
| | A | kW | H (m) = Total head | | | | | | | | | | | | | | | | |
| GKV2 65-40L-0020F | 4,1 | 2 | | 15,8 | 15 | 14,9 | 14,7 | 14,6 | 14,5 | 13,3 | 12,4 | 11,6 | 10,8 | 10,1 | 9,3 | 8,6 | 7,8 | 7 | 6,2 |
| GKV2 65-40G-0025F | 5,5 | 2,5 | | 17,4 | 16,9 | 16,8 | 16,7 | 16,6 | 16,6 | 15,7 | 14,9 | 14,2 | 13,5 | 12,8 | 12,1 | 11,3 | 10,4 | 9,5 | 8,5 |
| GKV2 65-40A-0031F | 5,6 | 3,1 | | 26,8 | - | - | - | - | - | 24,5 | 23,4 | 22,3 | 21,2 | 20,1 | 18,9 | - | - | - | - |
| GKV2 65-40D-0031F | 5,6 | 3,1 | | 22,7 | 22 | 21,9 | 21,8 | 21,7 | 21,6 | 20,6 | 19,6 | 18,6 | 17,7 | 16,8 | 15,9 | 14,8 | 13,8 | 12,7 | 11,6 |

### n ≈ 950 1/min

| | | | Q = Flow | | | | | | | | | | | | | | | |
|---|---|---|---|---|---|---|---|---|---|---|---|---|---|---|---|---|---|---|
| | | | m³/h | 0 | 2,2 | 2,9 | 3,6 | 7,2 | 10,8 | 14,4 | 18 | 21,5 | 25,2 | 28,8 | 32,4 | 36 | 54 | 72 |
| Model | 400V | P2 | l/min | | 36,66 | 48,33 | 60 | 120 | 180 | 240 | 300 | 358 | 420 | 480 | 540 | 600 | 900 | 1200 |
| | A | kW | H (m) = Total head | | | | | | | | | | | | | | | |
| GKV6 80-80P-0015H | 3,4 | 1,5 | | 3,1 | 3,1 | 3,1 | 3 | 2,9 | 2,7 | 2,5 | 2,2 | 2 | 1,7 | 1,4 | 1 | 0,6 | - | - |
| GKV6 80-80M-0015H | 3,4 | 1,5 | | 4,1 | 4 | 4 | 4 | 3,8 | 3,6 | 3,4 | 3,2 | 2,9 | 2,7 | 2,4 | 2,1 | 1,8 | - | - |
| GKV6 80-80I-0015H | 3,4 | 1,5 | | 4,7 | 4,6 | 4,6 | 4,6 | 4,4 | 4,3 | 4,1 | 3,9 | 3,7 | 3,4 | 3,2 | 2,9 | 2,7 | 1,4 | - |
| GKV6 80-80E-0015H | 3,4 | 1,5 | | 6,1 | 6 | 6 | 6 | 5,8 | 5,6 | 5,4 | 5,2 | 5 | 4,8 | 4,6 | 4,4 | 4,2 | 2,9 | 1,4 |
| GKV6 80-80A-0015H | 3,4 | 1,5 | | 7,6 | 7,5 | 7,4 | 7,4 | 7,2 | 7 | 6,7 | 6,5 | 6,3 | 6,1 | 5,9 | 5,7 | 5,4 | 4,2 | 2,7 |

### n ≈ 1450 1/min

| | | | | | | Q = Flow | | | | | | | | | | | | | |
|---|---|---|---|---|---|---|---|---|---|---|---|---|---|---|---|---|---|---|---|
| | | | | | | m³/h | 0 | 2,9 | 3,6 | 7,2 | 14,4 | 21,5 | 28,8 | 36 | 54 | 72 | 90 | 108 | 126 |
| Model | 400V | 400V | 690V | P2 | P2 | l/min | 0 | 48,33 | 60 | 120 | 240 | 358 | 480 | 600 | 900 | 1200 | 1500 | 1800 | 2100 |
| | A | A | A | kW | HP | | H (m) = Total head | | | | | | | | | | | | |
| GKV4 80-80P-0016H | 3,4 | - | - | 1,6 | - | | 6,9 | 6,8 | 6,8 | 6,6 | 6,1 | 5,4 | 4,6 | 3,7 | - | - | - | - | - |
| GKV4 80-80M-0016H | 3,4 | - | - | 1,6 | - | | 9,4 | 9,2 | 9,1 | 8,9 | 8,3 | 7,8 | 7,2 | 6,4 | 4,3 | - | - | - | - |
| GKV4 80-80I-0021H | 5,0 | - | - | 2,1 | - | | 10,9 | 10,8 | 10,7 | 10,5 | 10 | 9,5 | 8,8 | 8,1 | 6,2 | 4,1 | - | - | - |
| GKV4 80-80H-0029H | 6,1 | - | - | 2,9 | - | | 12,4 | 12,2 | 12,2 | 11,9 | 11,4 | 10,9 | 10,2 | 9,6 | 7,7 | 5,6 | 3,3 | - | - |
| GKV4 80-80E-0037H | 7,7 | - | - | 3,7 | 5 | | 14,1 | 13,9 | 13,8 | 13,5 | 12,9 | 12,3 | 11,7 | 11,1 | 9,6 | 7,7 | 5,6 | 3 | - |
| GKV4 80-80C-0046H | 9,5 | - | - | 4,6 | - | | 15,7 | 15,5 | 15,5 | 15,2 | 14,6 | 14 | 13,4 | 12,7 | 11,1 | 9,4 | 7,6 | 5,7 | - |
| GKV4 80-80A-0058H | - | 11,9 | 6,9 | 5,8 | - | | 17,3 | 17 | 16,9 | 16,6 | 15,8 | 15 | 14,3 | 13,6 | 12,1 | 10,5 | 8,7 | 6,5 | 4,2 |

### n ≈ 2850 1/min

| | | | | | Q = Flow | | | | | | | | | | | | | | | | |
|---|---|---|---|---|---|---|---|---|---|---|---|---|---|---|---|---|---|---|---|---|---|
| | | | | | m³/h | 0 | 1,4 | 2,2 | 2,9 | 3,6 | 7,2 | 10,8 | 14,4 | 18 | 21,5 | 25,2 | 28,8 | 32,4 | 36 | 54 | 72 |
| Model | 400V | | 690V | P2 | l/min | 0 | 23,33 | 36,66 | 48,33 | 60 | 120 | 180 | 240 | 300 | 358 | 420 | 480 | 540 | 600 | 900 | 1200 |
| | A | | | kW | | H (m) = Total head | | | | | | | | | | | | | | | |
| GKV2 80-80V-0048H | 8,9 | - | - | 4,8 | | 19,5 | 19,5 | 19,4 | 19,4 | 19,4 | 19,1 | 18,8 | 18,3 | 17,9 | 17,3 | 16,8 | 16,2 | 15,6 | 15 | - | - |
| GKV2 80-80X-0048H | 8,9 | - | - | 4,8 | | 17 | 17 | 16,9 | 16,9 | 16,9 | 16,6 | 16,2 | 15,8 | 15,4 | 15 | 14,5 | 14,1 | 13,6 | 13,1 | 10,5 | - |
| GKV2 80-80Z-0048H | 8,9 | - | - | 4,8 | | 14 | 14 | 13,9 | 13,9 | 13,9 | 13,6 | 13,3 | 12,9 | 12,5 | 12 | 11,5 | 11 | 10,5 | 9,9 | 6,6 | - |
| GKV2 80-80W-0048H | 8,9 | - | - | 4,8 | | 25,1 | 25 | 24,9 | 24,8 | 24,8 | 24,4 | 24 | 23,5 | 23,1 | 22,5 | 22 | 21,3 | 20,6 | - | - | - |
| GKV2 80-80N-0065H | - | 11,9 | 6,9 | 6,5 | | 34,9 | 34,8 | 34,8 | 34,8 | 34,8 | 34,6 | 34,2 | 33,5 | 32,6 | 31,7 | - | - | - | - | - | - |
| GKV2 80-80P-0065H | - | 11,9 | 6,9 | 6,5 | | 28,8 | 28,6 | 28,5 | 28,4 | 28,3 | 27,9 | 27,5 | 27,1 | 26,6 | 26,2 | 25,7 | 25,1 | 24,5 | 23,9 | - | - |
| GKV2 80-80Q-0065H | - | 11,9 | 6,9 | 6,5 | | 33,1 | 33,1 | 33,1 | 33,1 | 33 | 32,7 | 32,2 | 31,7 | 31,1 | 30,5 | 29,9 | 29,4 | - | - | - | - |
| GKV2 80-80R-0065H | - | 11,9 | 6,9 | 6,5 | | 30,9 | 30,8 | 30,7 | 30,7 | 30,6 | 30,3 | 30 | 29,5 | 28,9 | 28,3 | 27,6 | 27 | 26,3 | 25,5 | - | - |
| GKV2 80-80T-0065H | - | 11,9 | 6,9 | 6,5 | | 26,7 | 26,6 | 26,6 | 26,6 | 26,5 | 26,2 | 25,9 | 25,4 | 24,9 | 24,3 | 23,7 | 23,1 | 22,4 | 21,7 | 18,2 | - |
| GKV2 80-80W-0065H | - | 11,9 | 6,9 | 6,5 | | 25,6 | 25,5 | 25,5 | 25,5 | 25,4 | 25,1 | 24,7 | 24,2 | 23,6 | 23 | 22,4 | 21,7 | 21,1 | 20,4 | 16,6 | 12,3 |

# GKV

calpeda

## Performance

### n ≈ 2850 1/min

| Model | 400V | 690V | P2 | Q = Flow | | | | | | | | | | | | | | | | |
|---|---|---|---|---|---|---|---|---|---|---|---|---|---|---|---|---|---|---|---|---|
| | | | | m³/h | 0 | 1,4 | 2,2 | 2,9 | 3,2 | 3,6 | 7,2 | 14,4 | 21,5 | 28,8 | 36 | 54 | 72 | 90 | 108 | 126 | 144 |
| | | | | l/min | | 23,33 | 36,66 | 48,33 | 53,33 | 60 | 120 | 240 | 358 | 480 | 600 | 900 | 1200 | 1500 | 1800 | 2100 | 2400 |
| | A | | kW | H (m) = Total head | | | | | | | | | | | | | | | | | |
| GKV2 80-80W-0090H | 16,3 | 9,4 | 9 | | 25,5 | - | - | - | 25,2 | 25,2 | 24,9 | 24 | 22,9 | 21,6 | 20,3 | 16,9 | 13,5 | 10,4 | 7,6 | 4,9 | - |
| GKV2 80-80T-0090H | 16,3 | 9,4 | 9 | | 26,6 | - | - | - | 26,3 | 26,3 | 25,9 | 25,1 | 24 | 22,9 | 21,6 | 18 | 14,5 | 11,2 | 8,3 | - | - |
| GKV2 80-80R-0090H | 16,3 | 9,4 | 9 | | 30,7 | - | - | - | 30,4 | 30,4 | 30,1 | 29,2 | 28 | 26,8 | 25,4 | 21,6 | 17,7 | 13,9 | 10,3 | - | - |
| GKV2 80-80Q-0090H | 16,3 | 9,4 | 9 | | 33 | - | - | - | 32,7 | 32,7 | 32,3 | 31,4 | 30,2 | 28,8 | 27,2 | 23,1 | 19 | 15 | - | - | - |
| GKV2 80-80P-0090H | 16,3 | 9,4 | 9 | | 28,7 | - | - | - | 28,4 | 28,4 | 28,1 | 27,2 | 26,2 | 25 | 23,6 | 19,9 | 16 | 12,5 | 9,4 | - | - |
| GKV2 80-80N-0090H | 16,3 | 9,4 | 9 | | 34,9 | - | - | - | 34,8 | 34,7 | 34,5 | 33,5 | 32 | 30,4 | 28,9 | 25,6 | - | - | - | - | - |
| GKV2 80-80R-0125L | 22,4 | 12,9 | 12,5 | | 33,3 | 33,2 | 33,1 | 33,1 | - | 33 | 32,7 | 31,9 | 31 | 29,9 | 28,7 | 25,3 | 21,5 | 17,8 | 14,3 | 11,2 | 8,4 |
| GKV2 80-80P-0165L | 31 | 17,9 | 16,5 | | 41,8 | 41,7 | 41,7 | 41,6 | - | 41,6 | 41,5 | 40,7 | 39,6 | 38,3 | 36,9 | 33,2 | 29,3 | 25,5 | 21,8 | 18,1 | 14,1 |
| GKV2 80-80L-0165L | 31 | 17,9 | 16,5 | | 47,7 | 47,6 | 47,6 | 47,6 | - | 47,5 | 47,3 | 46,5 | 45,5 | 44,3 | 43 | 39,7 | 36,5 | 33,1 | - | - | - |
| GKV2 80-80G-0165L | 31 | 17,9 | 16,5 | | 55,2 | 55,2 | 55,1 | 55,1 | - | 55,1 | 54,9 | 54,2 | 53,1 | 51,7 | 50,3 | 46,6 | - | - | - | - | - |
| GKV2 80-80D-0165L | 31 | 17,9 | 16,5 | | 61,5 | 61,4 | 61,4 | 61,3 | - | 61,2 | 60,8 | 59,8 | 58,2 | 56,1 | 53,7 | - | - | - | - | - | - |
| GKV2 80-80A-0165L | 31 | 17,9 | 16,5 | | 67,7 | 67,6 | 67,5 | 67,4 | - | 67,3 | 66,7 | 65,2 | - | - | - | - | - | - | - | - | - |

### n ≈ 950 1/min

| Model | 400V | P2 | Q = Flow | | | | | | | | | | | | |
|---|---|---|---|---|---|---|---|---|---|---|---|---|---|---|---|
| | | | m³/h | 0 | 7,2 | 14,4 | 21,5 | 28,8 | 36 | 54 | 72 | 90 | 108 | 126 | 144 |
| | | | l/min | | 120 | 240 | 358 | 480 | 600 | 900 | 1200 | 1500 | 1800 | 2100 | 2400 |
| | A | kW | H (m) = Total head | | | | | | | | | | | | |
| GKV6 100-100E-0040L | 9 | 4 | | 7,3 | 7,1 | 6,9 | 6,6 | 6,3 | 6 | 5,2 | 4,2 | 3,1 | 1,7 | - | - |
| GKV6 100-100C-0040L | 9 | 4 | | 8,3 | 8,1 | 7,9 | 7,7 | 7,4 | 7,2 | 6,4 | 5,5 | 4,5 | 3,3 | 2,1 | 0,7 |
| GKV6 100-100A-0040L | 9 | 4 | | 10,1 | 9,8 | 9,5 | 9,2 | 8,9 | 8,6 | 7,9 | 7,2 | 6,4 | 5,4 | 4,3 | 2,9 |

### n ≈ 1450 1/min

| Model | 400V | | 690V | P2 | Q = Flow | | | | | | | | | | | | | | | | |
|---|---|---|---|---|---|---|---|---|---|---|---|---|---|---|---|---|---|---|---|---|---|
| | | | | | m³/h | 0 | 7,2 | 14,4 | 21,5 | 28,8 | 36 | 45 | 54 | 63 | 72 | 81 | 90 | 99 | 108 | 117 | 126 |
| | | | | | l/min | 0 | 120 | 240 | 358 | 480 | 600 | 750 | 900 | 1050 | 1200 | 1350 | 1500 | 1650 | 1800 | 1950 | 2100 |
| | A | | | kW | H (m) = Total head | | | | | | | | | | | | | | | | |
| GKV4 100-100R-0021H | 5,0 | - | - | 2,1 | | 7,4 | 7,2 | 7 | 6,8 | 6,5 | 6,1 | 5,7 | 5,1 | 4,5 | 3,8 | 3,1 | 2,4 | - | - | - | - |
| GKV4 100-100N-0029H | 6,1 | - | - | 2,9 | | 8,8 | 8,6 | 8,3 | 8,1 | 7,8 | 7,5 | 7,1 | 6,6 | 6 | 5,3 | 4,6 | 3,8 | 2,9 | 2 | - | - |
| GKV4 100-100L-0037H | 7,7 | - | - | 3,7 | | 10 | 9,7 | 9,4 | 9,2 | 8,9 | 8,5 | 8,1 | 7,5 | 6,9 | 6,3 | 5,7 | 5 | 4,4 | 3,8 | 3,1 | 2,3 |
| GKV4 100-100F-0046H | 9,5 | - | - | 4,6 | | 11,6 | 11,5 | 11,3 | 11,1 | 10,7 | 10,4 | 9,9 | 9,3 | 8,8 | 8,3 | 7,7 | 7,1 | 6,5 | 5,9 | 5,2 | - |
| GKV4 100-100A-0058H | - | 11,9 | 6,9 | 5,8 | | 15 | 14,5 | 14,1 | 13,8 | 13,4 | 13,1 | 12,6 | 12,2 | 11,8 | 11,3 | 10,8 | 10,3 | 9,7 | 9,1 | - | - |

### n ≈ 1450 1/min

| Model | 400V | 690V | P2 | Q = Flow | | | | | | | | | | | | | |
|---|---|---|---|---|---|---|---|---|---|---|---|---|---|---|---|---|---|
| | | | | m³/h | 0 | 10,8 | 18 | 36 | 54 | 72 | 90 | 108 | 126 | 144 | 162 | 180 | 216 |
| | | | | l/min | | 180 | 300 | 600 | 900 | 1200 | 1500 | 1800 | 2100 | 2400 | 2700 | 3000 | 3600 |
| | A | | kW | H (m) = Total head | | | | | | | | | | | | | |
| GKV4 100-100E-0075L | 15,3 | 8,8 | 7,5 | | 16,6 | 16,4 | 16,2 | 15,2 | 14 | 12,7 | 11,2 | 9,7 | 8,2 | 6,7 | 5,2 | - | - |
| GKV4 100-100C-0105L | 20 | 11,5 | 10,5 | | 18,8 | 18,5 | 18,2 | 17,2 | 16,1 | 14,9 | 13,6 | 12,2 | 10,8 | 9,4 | 7,8 | 6,1 | - |
| GKV4 100-100A-0125L | 24 | 13,9 | 12,5 | | 23 | 22,4 | 22,1 | 21,1 | 20 | 18,9 | 17,7 | 16,5 | 15,3 | 13,9 | 12,6 | 11,1 | 7,9 |

### n ≈ 2850 1/min

| Model | 400V | 690V | P2 | Q = Flow | | | | | | | | | | | | | | | | |
|---|---|---|---|---|---|---|---|---|---|---|---|---|---|---|---|---|---|---|---|---|
| | | | | m³/h | 0 | 7,2 | 14,4 | 21,5 | 28,8 | 36 | 54 | 72 | 90 | 108 | 126 | 144 | 162 | 180 | 198 | 216 |
| | | | | l/min | | 120 | 240 | 358 | 480 | 600 | 900 | 1200 | 1500 | 1800 | 2100 | 2400 | 2700 | 3000 | 3300 | 3600 |
| | A | | kW | H (m) = Total head | | | | | | | | | | | | | | | | |
| GKV2 100-80L-0260N | 44,6 | 25,7 | 26 | | 29,2 | 28,8 | 28,3 | 27,8 | 27,3 | 26,7 | 25,2 | 23,5 | 21,7 | 19,7 | 17,6 | 15,3 | 12,9 | 10,4 | 7,9 | - |
| GKV2 100-80I-0260N | 44,6 | 25,7 | 26 | | 35,4 | 35 | 34,7 | 34,2 | 33,8 | 33,3 | 31,8 | 30,2 | 28,3 | 26,2 | 23,9 | 21,5 | 19 | 16,3 | - | - |
| GKV2 100-80H-0350N | 57,8 | 33,4 | 35 | | 40,6 | 40,1 | 39,6 | 39,1 | 38,6 | 38,1 | 36,8 | 35,4 | 33,8 | 32,1 | 30,1 | 27,8 | 25,4 | 22,7 | 19,8 | 16,8 |
| GKV2 100-80G-0350N | 57,8 | 33,4 | 35 | | 45,5 | 45,1 | 44,6 | 44,2 | 43,7 | 43,2 | 41,9 | 40,3 | 38,5 | 36,5 | 34,3 | 32 | 29,4 | 26,7 | - | - |
| GKV2 100-80F-0350N | 57,8 | 33,4 | 35 | | 49,7 | 49,3 | 48,9 | 48,5 | 48,1 | 47,6 | 46,1 | 44,3 | 42,2 | 40 | 37,6 | 34,9 | - | - | - | - |
| GKV2 100-80E-0350N | 57,8 | 33,4 | 35 | | 53,4 | 53,1 | 52,7 | 52,3 | 51,9 | 51,4 | 50 | 48,3 | 46,2 | 43,9 | 41,5 | - | - | - | - | - |
| GKV2 100-80D-0350N | 57,8 | 33,4 | 35 | | 56,3 | 56 | 55,7 | 55,3 | 54,9 | 54,4 | 52,9 | 51,1 | 49 | 46,6 | - | - | - | - | - | - |

# GKV

## Characteristic curves

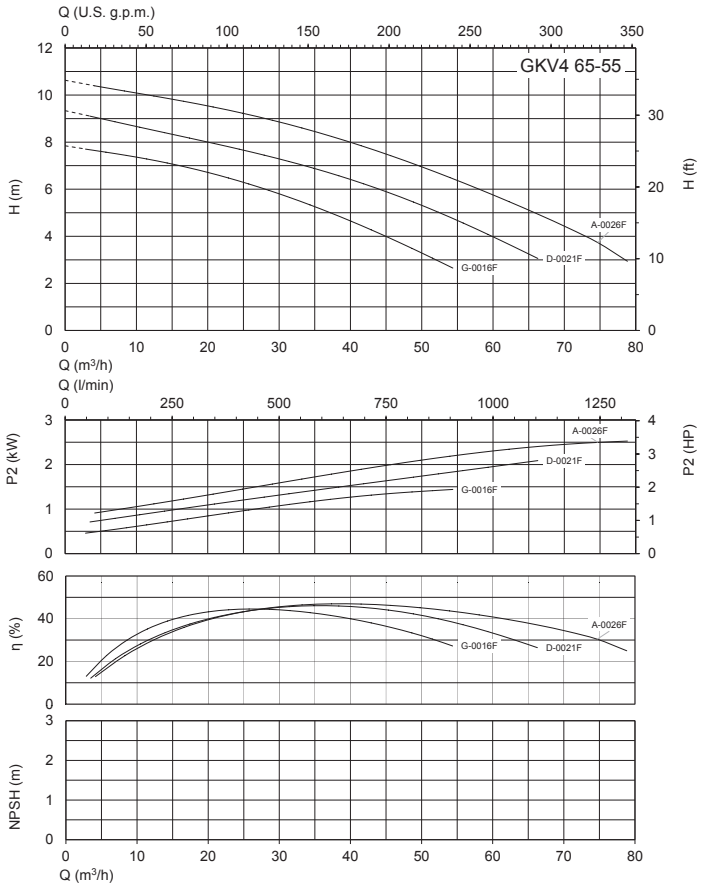


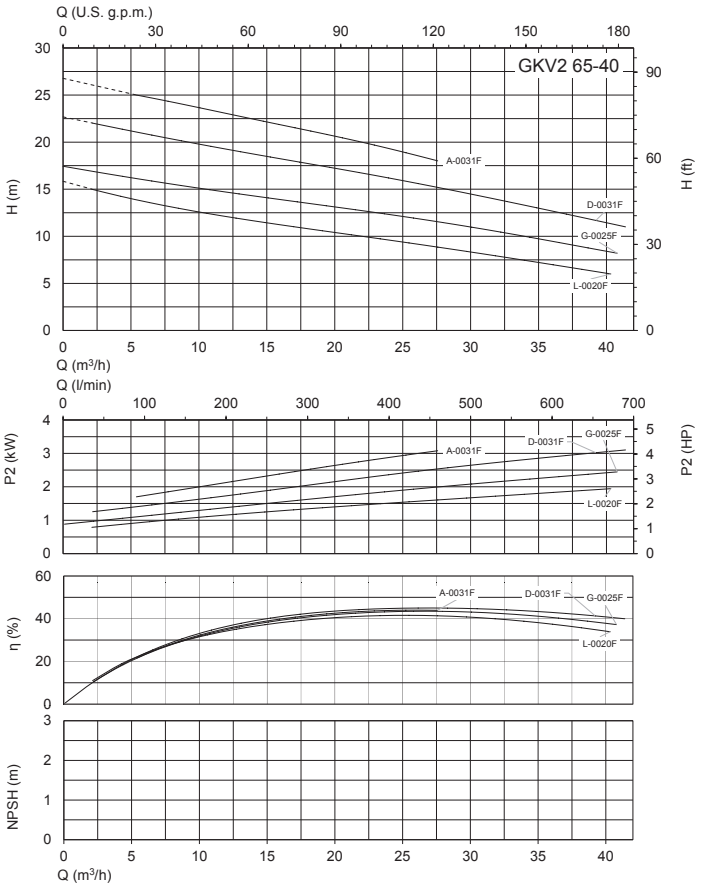


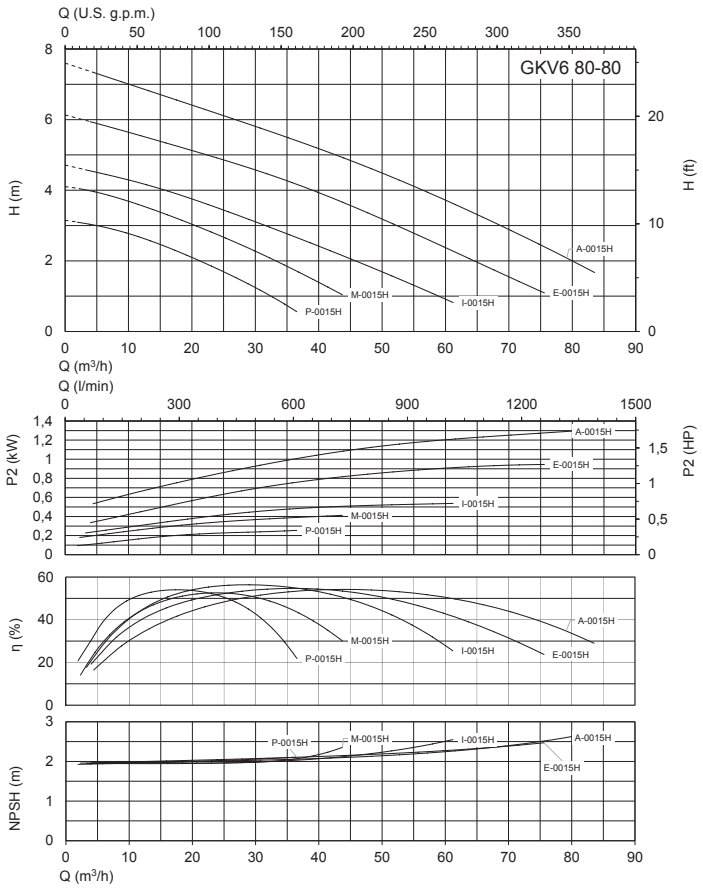


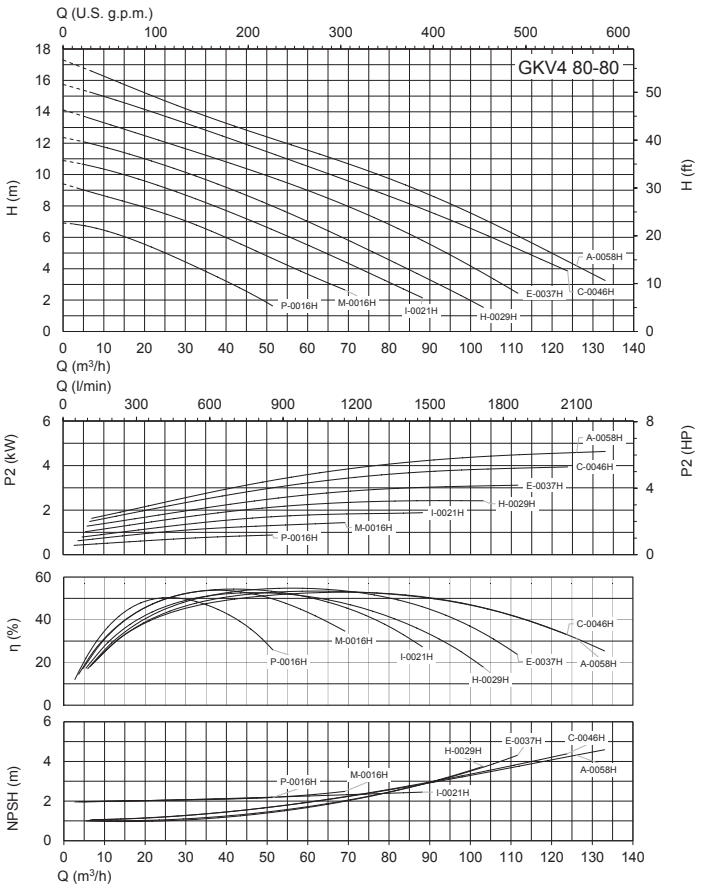

# GKV

## Characteristic curves

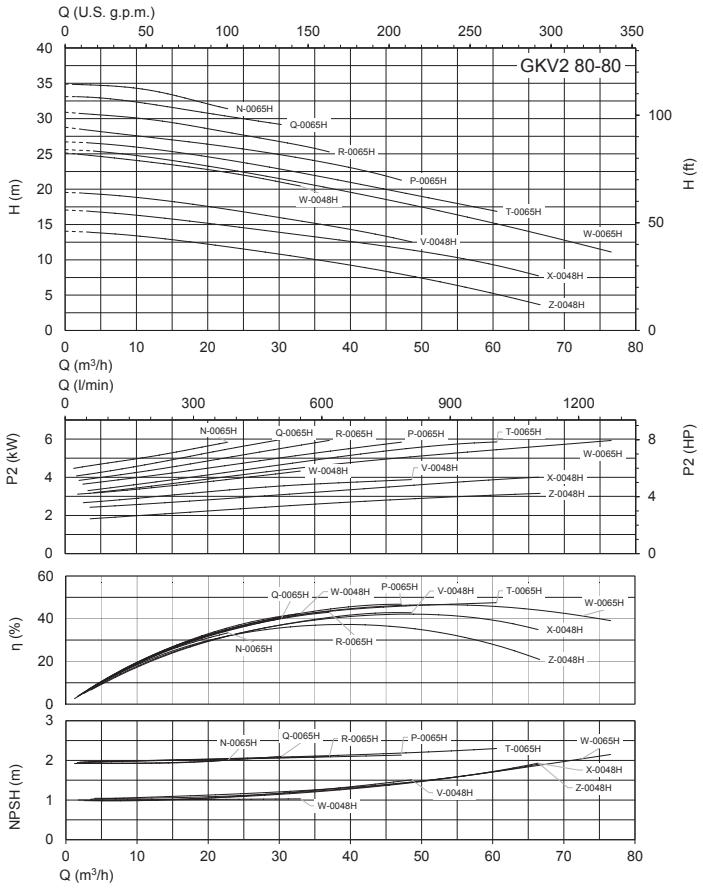


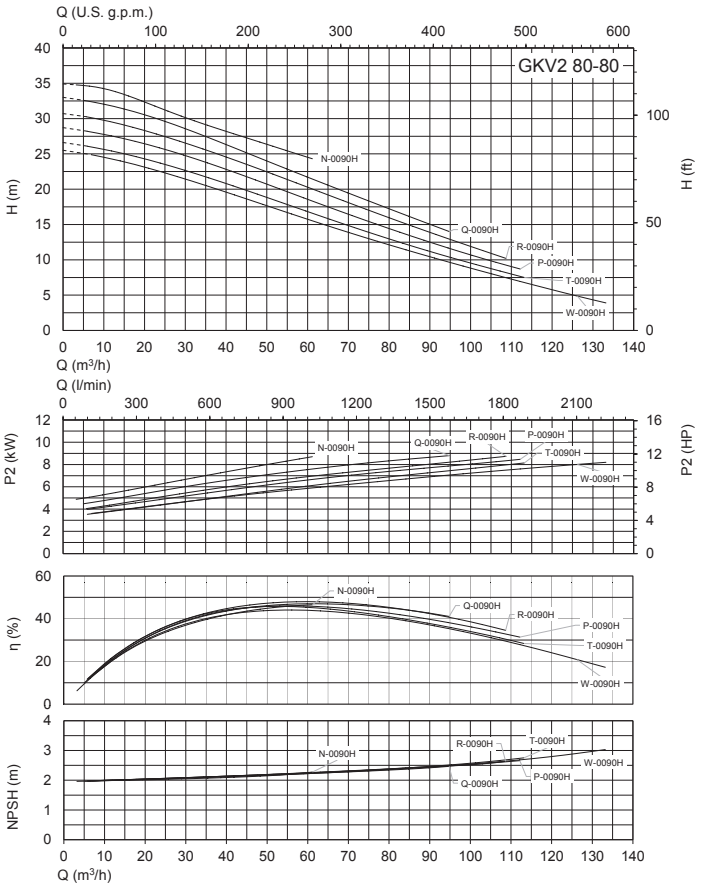


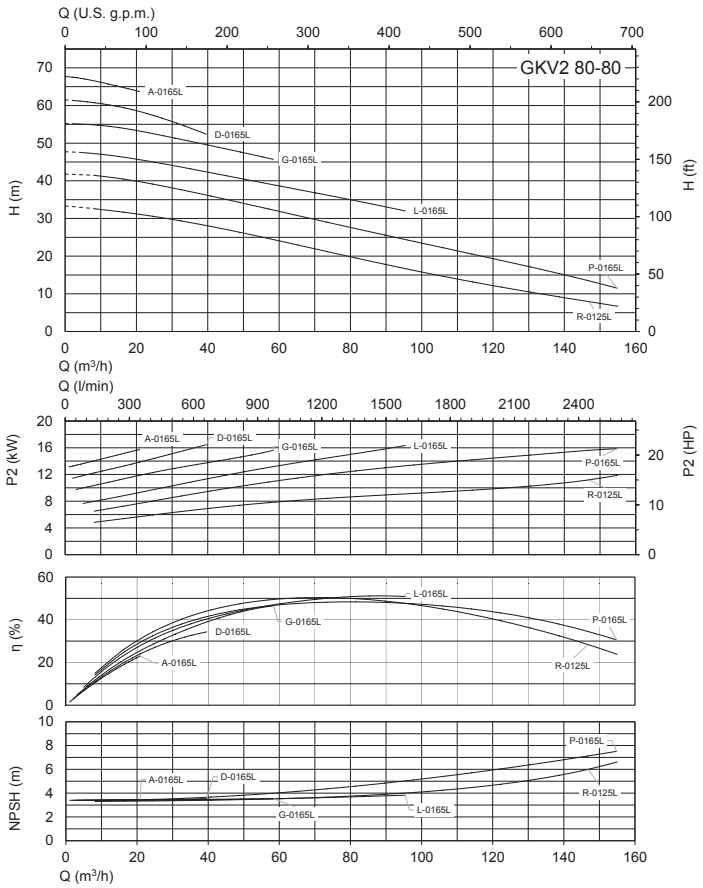

# GKV

## Characteristic curves

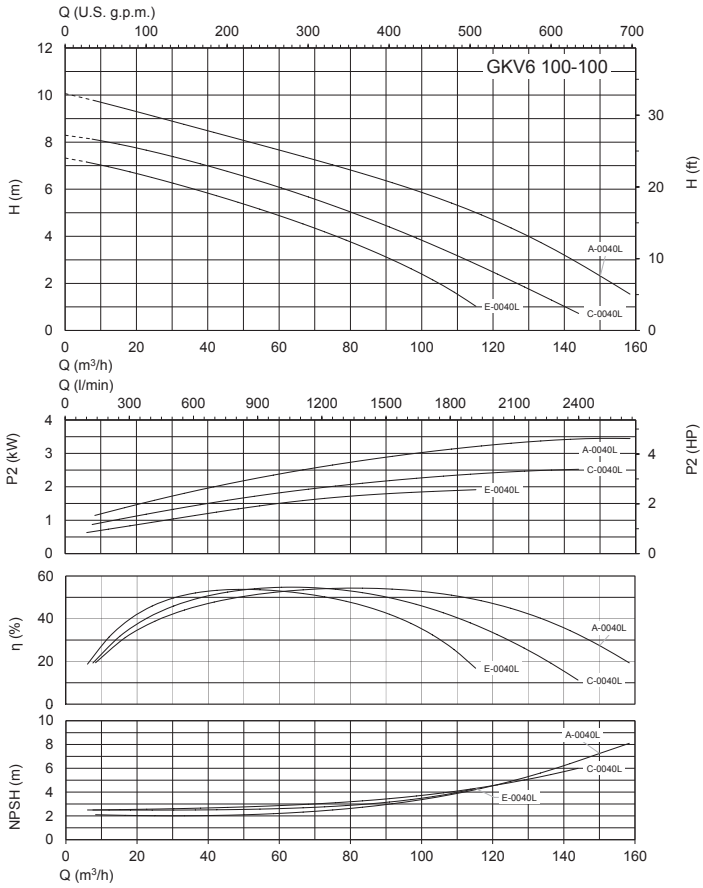


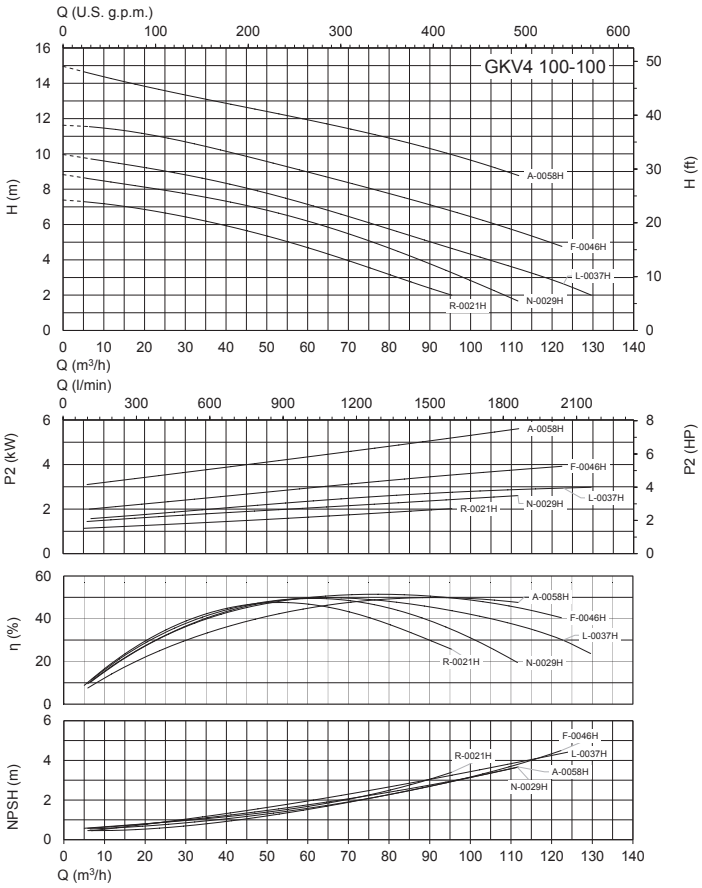


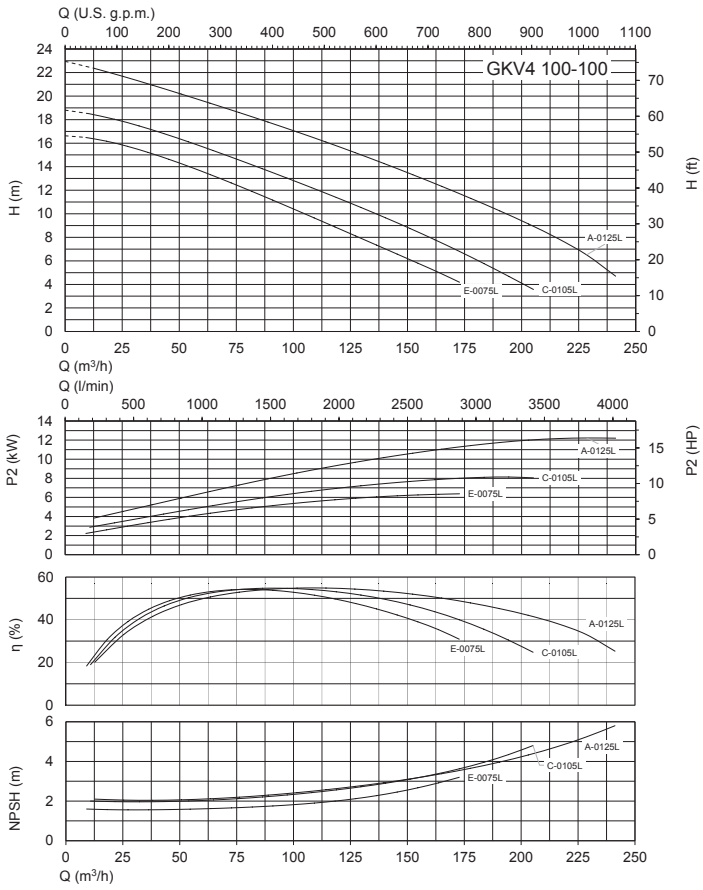


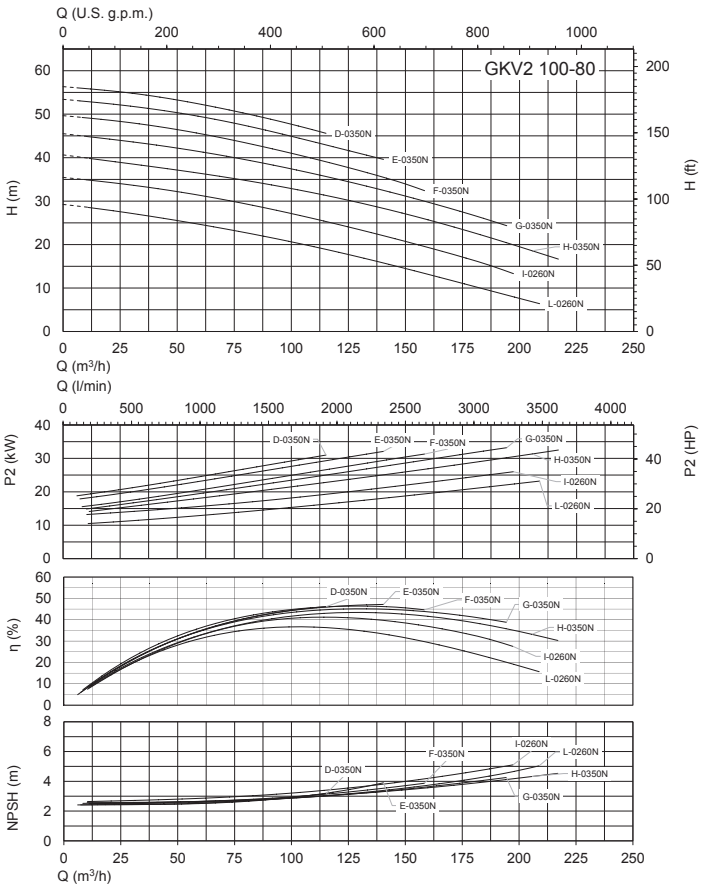

# GKV

## Dimensions and weight

**Duck foot coupling**

**SAK**

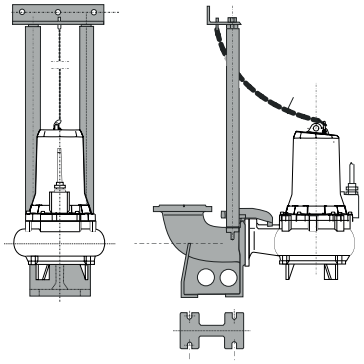

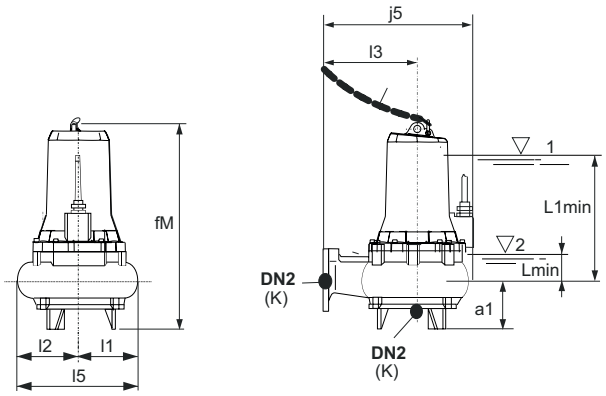


| TYPE | | mm | | | | | | | | | | Kg |
|---|---|---|---|---|---|---|---|---|---|---|---|---|
| | DN2 | a1 | fM | j5 | K | l1 | l2 | l3 | l5 | L1min | Lmin | Weight |
| GKV4 65-55G-0016F | 65 | 140 | 565.6 | 373 | 16 | 148 | 148 | 225 | 296 | 255 | 90 | 63 |
| GKV4 65-55D-0021F | 65 | 140 | 565.6 | 373 | 16 | 148 | 148 | 225 | 296 | 255 | 90 | 63 |
| GKV4 65-55A-0026F | 65 | 140 | 565.6 | 373 | 16 | 148 | 148 | 225 | 296 | 255 | 90 | 66 |
| GKV2 65-40L-0020F | 65 | 107.5 | 529.6 | 363 | 16 | 113 | 113 | 225 | 226 | 282.5 | 92.5 | 54 |
| GKV2 65-40G-0025F | 65 | 107.5 | 529.6 | 370 | 16 | 113 | 113 | 225 | 226 | 282.5 | 92.5 | 56 |
| GKV2 65-40A-0031F | 65 | 107.5 | 533.6 | 370 | 16 | 113 | 113 | 225 | 226 | 282.5 | 92.5 | 61 |
| GKV2 65-40D-0031F | 65 | 107.5 | 533.6 | 370 | 16 | 113 | 113 | 225 | 226 | 282.5 | 92.5 | 60 |

L1min = Minimum submergence depth for motor without casing with continuous duty S1 (NPSHR permitting)
Lmin = Minimum submergence depth for motor without casing with intermittent duty S3 (NPSHR permitting)

# GKV

## Dimensions and weight

**Duck foot coupling**

**SAK**

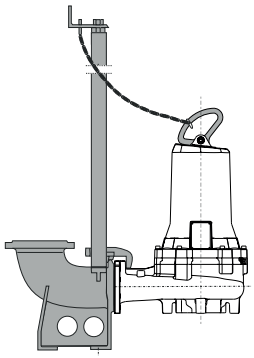

**Submersible pump rest**

**APK**

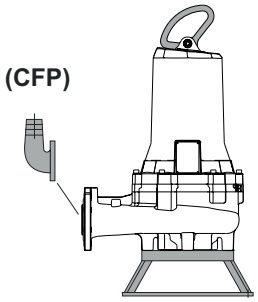


**Dry chamber pump rest**

**APCK**

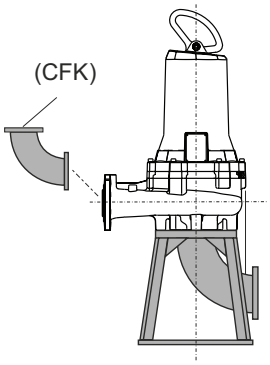


**Dry chamber pump support**

**SOK**

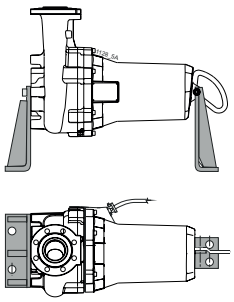

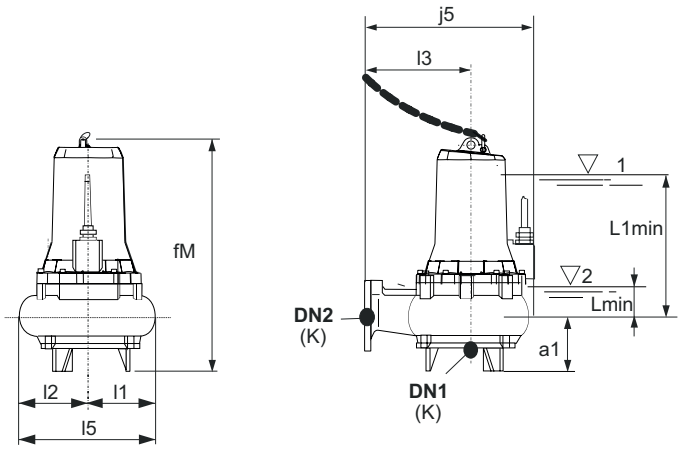


| TYPE | | | mm | | | | | | | | | | Kg |
|---|---|---|---|---|---|---|---|---|---|---|---|---|---|
| | DN1 | DN2 | a1 | fM | j5 | K | l1 | l2 | l3 | l5 | L1min | Lmin | Weight |
| GKV6 80-80P-0015H | 80 | 80 | 92 | 638.3 | 392 | 16 | 204.5 | 146 | 245 | 350.5 | 315 | 97 | 83.6 |
| GKV6 80-80M-0015H | 80 | 80 | 92 | 638.3 | 392 | 16 | 204.5 | 146 | 245 | 350.5 | 315 | 97 | 84.5 |
| GKV6 80-80I-0015H | 80 | 80 | 92 | 638.3 | 392 | 16 | 204.5 | 146 | 245 | 350.5 | 315 | 97 | 81.6 |
| GKV6 80-80E-0015H | 80 | 80 | 92 | 638.3 | 392 | 16 | 204.5 | 146 | 245 | 350.5 | 315 | 97 | 86.6 |
| GKV6 80-80A-0015H | 80 | 80 | 92 | 638.3 | 392 | 16 | 204.5 | 146 | 245 | 350.5 | 315 | 97 | 82.7 |
| GKV4 80-80P-0016H | 80 | 80 | 92 | 638.3 | 392 | 16 | 204.5 | 146 | 245 | 350.5 | 315 | 97 | 87.8 |
| GKV4 80-80M-0016H | 80 | 80 | 92 | 638.3 | 392 | 16 | 204.5 | 146 | 245 | 350.5 | 315 | 97 | 88.7 |
| GKV4 80-80I-0021H | 80 | 80 | 92 | 638.3 | 392 | 16 | 204.5 | 146 | 245 | 350.5 | 315 | 97 | 90.2 |
| GKV4 80-80H-0029H | 80 | 80 | 92 | 638.3 | 392 | 16 | 204.5 | 146 | 245 | 350.5 | 315 | 97 | 89 |
| GKV4 80-80E-0037H | 80 | 80 | 92 | 707.4 | 392 | 16 | 221 | 146 | 245 | 367 | 349 | 97 | 109.5 |
| GKV4 80-80C-0046H | 80 | 80 | 92 | 707.4 | 392 | 16 | 221 | 146 | 245 | 367 | 349 | 97 | 109.7 |
| GKV4 80-80A-0058H | 80 | 80 | 92 | 707.4 | 392 | 16 | 221 | 146 | 245 | 367 | 349 | 97 | 109 |

L1min = Minimum submergence depth for motor without casing with continuous duty S1 (NPSHR permitting)
Lmin = Minimum submergence depth for motor without casing with intermittent duty S3 (NPSHR permitting)

# GKV

## Dimensions and weight

**Duck foot coupling**

**SAK**

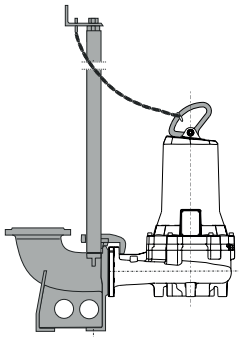

**Submersible pump rest**

**APK**

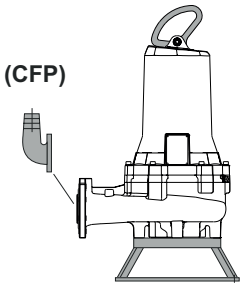


**Dry chamber pump rest**

**APCK**

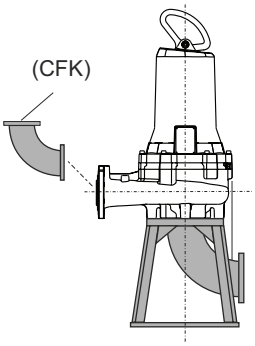


**Dry chamber pump support**

**SOK**

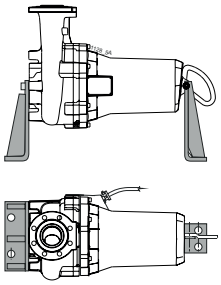

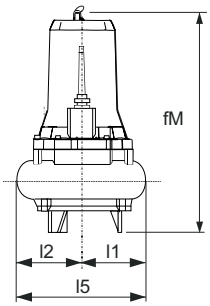


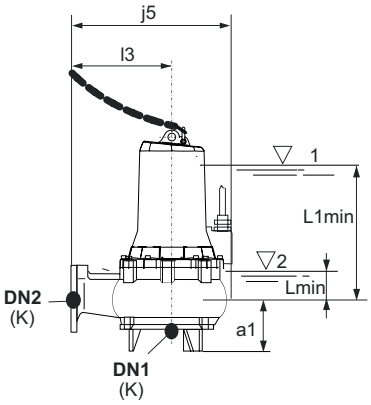


| TYPE | | | mm | | | | | | | | | | Kg |
|---|---|---|---|---|---|---|---|---|---|---|---|---|---|
| | DN1 | DN2 | a1 | fM | j5 | K | l1 | l2 | l3 | l5 | L1min | Lmin | Weight |
| GKV2 80-80V-0048H | 80 | 80 | 92 | 638.3 | 392 | 16 | 204.5 | 146 | 245 | 350.5 | 349 | 97 | 92.8 |
| GKV2 80-80X-0048H | 80 | 80 | 92 | 638.3 | 392 | 16 | 204.5 | 146 | 245 | 350.5 | 349 | 97 | 92.7 |
| GKV2 80-80Z-0048H | 80 | 80 | 92 | 638.3 | 392 | 16 | 204.5 | 146 | 245 | 350.5 | 349 | 97 | 92.5 |
| GKV2 80-80N-0065H | 80 | 80 | 92 | 707.4 | 392 | 16 | 221 | 146 | 245 | 367 | 349 | 97 | 112.8 |
| GKV2 80-80P-0065H | 80 | 80 | 92 | 707.4 | 392 | 16 | 221 | 146 | 245 | 367 | 349 | 97 | 112.4 |
| GKV2 80-80Q-0065H | 80 | 80 | 92 | 707.4 | 392 | 16 | 221 | 146 | 245 | 367 | 349 | 97 | 113 |
| GKV2 80-80R-0065H | 80 | 80 | 92 | 707.4 | 392 | 16 | 221 | 146 | 245 | 367 | 349 | 97 | 112.6 |
| GKV2 80-80T-0065H | 80 | 80 | 92 | 707.4 | 392 | 16 | 221 | 146 | 245 | 367 | 349 | 97 | 108 |
| GKV2 80-80W-0048H | 80 | 80 | 92 | 638.3 | 392 | 16 | 204.5 | 146 | 245 | 350.5 | 349 | 97 | 90 |
| GKV2 80-80W-0065H | 80 | 80 | 92 | 707.4 | 392 | 16 | 221 | 146 | 245 | 367 | 349 | 97 | 105 |
| GKV2 80-80W-0090H | 80 | 80 | 92 | 707.4 | 392 | 16 | 221 | 146 | 245 | 367 | 349 | 97 | - |
| GKV2 80-80T-0090H | 80 | 80 | 92 | 707.4 | 392 | 16 | 221 | 146 | 245 | 367 | 349 | 97 | - |
| GKV2 80-80R-0090H | 80 | 80 | 92 | 707.4 | 392 | 16 | 221 | 146 | 245 | 367 | 349 | 97 | - |
| GKV2 80-80Q-0090H | 80 | 80 | 92 | 707.4 | 392 | 16 | 221 | 146 | 245 | 367 | 349 | 97 | - |
| GKV2 80-80P-0090H | 80 | 80 | 92 | 707.4 | 392 | 16 | 221 | 146 | 245 | 367 | 349 | 97 | - |
| GKV2 80-80N-0090H | 80 | 80 | 92 | 707.4 | 392 | 16 | 221 | 146 | 245 | 367 | 349 | 97 | 108 |
| GKV2 80-80R-0125L | 80 | 80 | 99 | 775 | 543 | 16 | 225.5 | 165 | 370 | 390.5 | 446 | 98 | 144.2 |
| GKV2 80-80P-0165L | 80 | 80 | 99 | 777.4 | 543 | 16 | 236.5 | 165 | 370 | 401.5 | 446 | 98 | 169 |
| GKV2 80-80L-0165L | 80 | 80 | 99 | 777.4 | 543 | 16 | 236.5 | 165 | 370 | 401.5 | 446 | 98 | 169.1 |
| GKV2 80-80G-0165L | 80 | 80 | 99 | 777.4 | 543 | 16 | 236.5 | 165 | 370 | 401.5 | 446 | 98 | 169.4 |
| GKV2 80-80D-0165L | 80 | 80 | 99 | 777.4 | 543 | 16 | 236.5 | 165 | 370 | 401.5 | 446 | 98 | 169.7 |
| GKV2 80-80A-0165L | 80 | 80 | 99 | 777.4 | 543 | 16 | 236.5 | 165 | 370 | 401.5 | 446 | 98 | 163 |

L1min = Minimum submergence depth for motor without casing with continuous duty S1 (NPSHR permitting)
Lmin = Minimum submergence depth for motor without casing with intermittent duty S3 (NPSHR permitting)

# GKV

## Dimensions and weight

**Duck foot coupling**

**SAK**

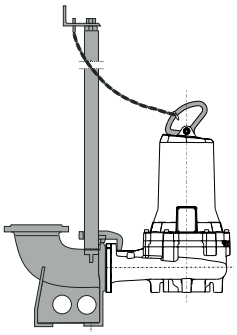

**Submersible pump rest**

**APK**

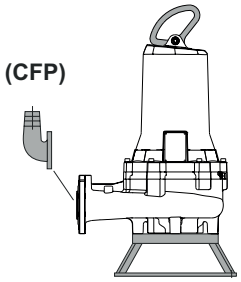


**Dry chamber pump rest**

**APCK**

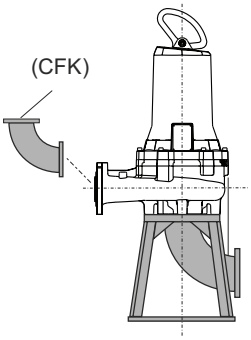


**Dry chamber pump support**

**SOK**

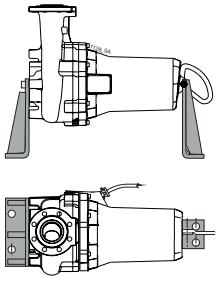

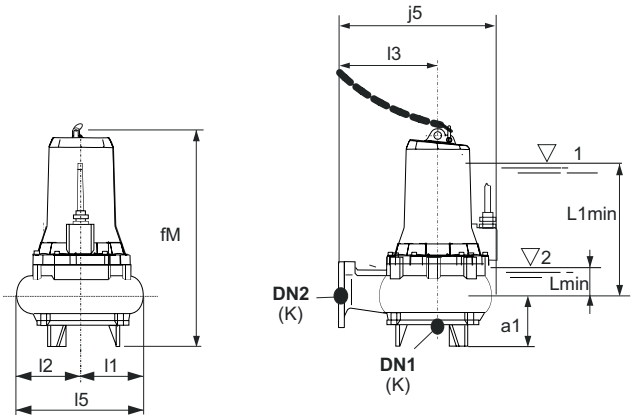


| TYPE | | | mm | | | | | | | | | | Kg |
|---|---|---|---|---|---|---|---|---|---|---|---|---|---|
| | DN1 | DN2 | a1 | fM | j5 | K | l1 | l2 | l3 | l5 | L1min | Lmin | Weight |
| GKV6 100-100E-0040L | 100 | 100 | 112 | 798 | 473 | 16 | 225.5 | 178.5 | 295 | 404 | 468 | 106 | 139.9 |
| GKV6 100-100C-0040L | 100 | 100 | 112 | 798 | 473 | 16 | 225.5 | 178.5 | 295 | 404 | 468 | 106 | 140.3 |
| GKV6 100-100A-0040L | 100 | 100 | 112 | 798 | 473 | 16 | 225.5 | 178.5 | 295 | 404 | 468 | 106 | 140.9 |
| GKV4 100-100R-0021H | 100 | 100 | 112 | 668.3 | 434 | 16 | 204.5 | 171 | 263 | 375.5 | 326 | 106 | 96.6 |
| GKV4 100-100N-0029H | 100 | 100 | 112 | 668.3 | 434 | 16 | 204.5 | 171 | 263 | 375.5 | 326 | 106 | 96.8 |
| GKV4 100-100L-0037H | 100 | 100 | 112 | 737.4 | 434 | 16 | 221 | 171 | 263 | 392 | 361 | 106 | 103 |
| GKV4 100-100F-0046H | 100 | 100 | 112 | 737.4 | 434 | 16 | 221 | 171 | 263 | 392 | 361 | 106 | 111.7 |
| GKV4 100-100A-0058H | 100 | 100 | 112 | 737.4 | 434 | 16 | 221 | 171 | 263 | 392 | 361 | 106 | 121.2 |
| GKV4 100-100E-0075L | 100 | 100 | 112 | 798 | 473 | 16 | 225.5 | 178.5 | 295 | 404 | 468 | 106 | 149 |
| GKV4 100-100C-0105L | 100 | 100 | 112 | 800.4 | 473 | 16 | 236 | 178.5 | 295 | 414.5 | 468 | 106 | 172 |
| GKV4 100-100A-0125L | 100 | 100 | 112 | 800.4 | 473 | 16 | 236.5 | 178.5 | 295 | 415 | 468 | 106 | 175 |

L1min = Minimum submergence depth for motor without casing with continuous duty S1 (NPSHR permitting)
Lmin = Minimum submergence depth for motor without casing with intermittent duty S3 (NPSHR permitting)

# GKV

## Dimensions and weight

**Duck foot coupling**

**SAK**

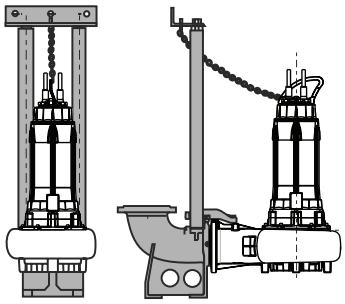

**Submersible pump rest**

**APK**

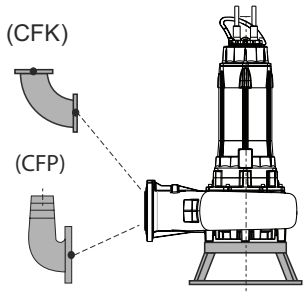


**Dry chamber pump rest**

**APCK**

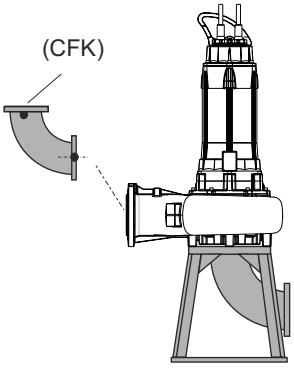


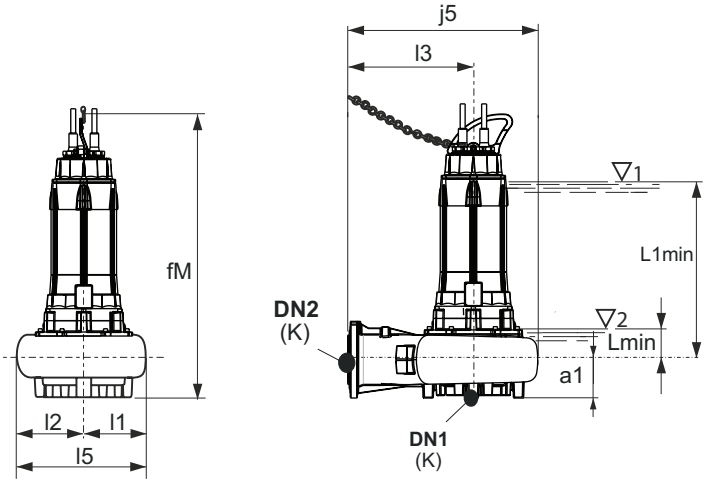


| TYPE | | | mm | | | | | | | | | | Kg |
|---|---|---|---|---|---|---|---|---|---|---|---|---|---|
| | DN1 | DN2 | a1 | fM | j5 | K | l1 | l2 | l3 | l5 | L1min | Lmin | Weight |
| GKV2 100-80L-0260N | 100 | 100 | 110 | 1183 | 553 | 16 | 200 | 200 | 335 | 400 | 788 | 167 | 330.7 |
| GKV2 100-80I-0260N | 100 | 100 | 110 | 1183 | 553 | 16 | 200 | 200 | 335 | 400 | 788 | 167 | 330.9 |
| GKV2 100-80H-0350N | 100 | 100 | 110 | 1183 | 553 | 16 | 200 | 200 | 335 | 400 | 788 | 167 | 354.1 |
| GKV2 100-80G-0350N | 100 | 100 | 110 | 1183 | 553 | 16 | 200 | 200 | 335 | 400 | 788 | 167 | 354.2 |
| GKV2 100-80F-0350N | 100 | 100 | 110 | 1183 | 553 | 16 | 200 | 200 | 335 | 400 | 788 | 167 | 354.3 |
| GKV2 100-80E-0350N | 100 | 100 | 110 | 1183 | 553 | 16 | 200 | 200 | 335 | 400 | 788 | 167 | 349.1 |
| GKV2 100-80D-0350N | 100 | 100 | 110 | 1183 | 553 | 16 | 200 | 200 | 335 | 400 | 788 | 167 | 354.6 |

L1min = Minimum submergence depth for motor without casing with continuous duty S1 (NPSHR permitting)
Lmin = Minimum submergence depth for motor without casing with intermittent duty S3 (NPSHR permitting)

# GKC

calpeda®

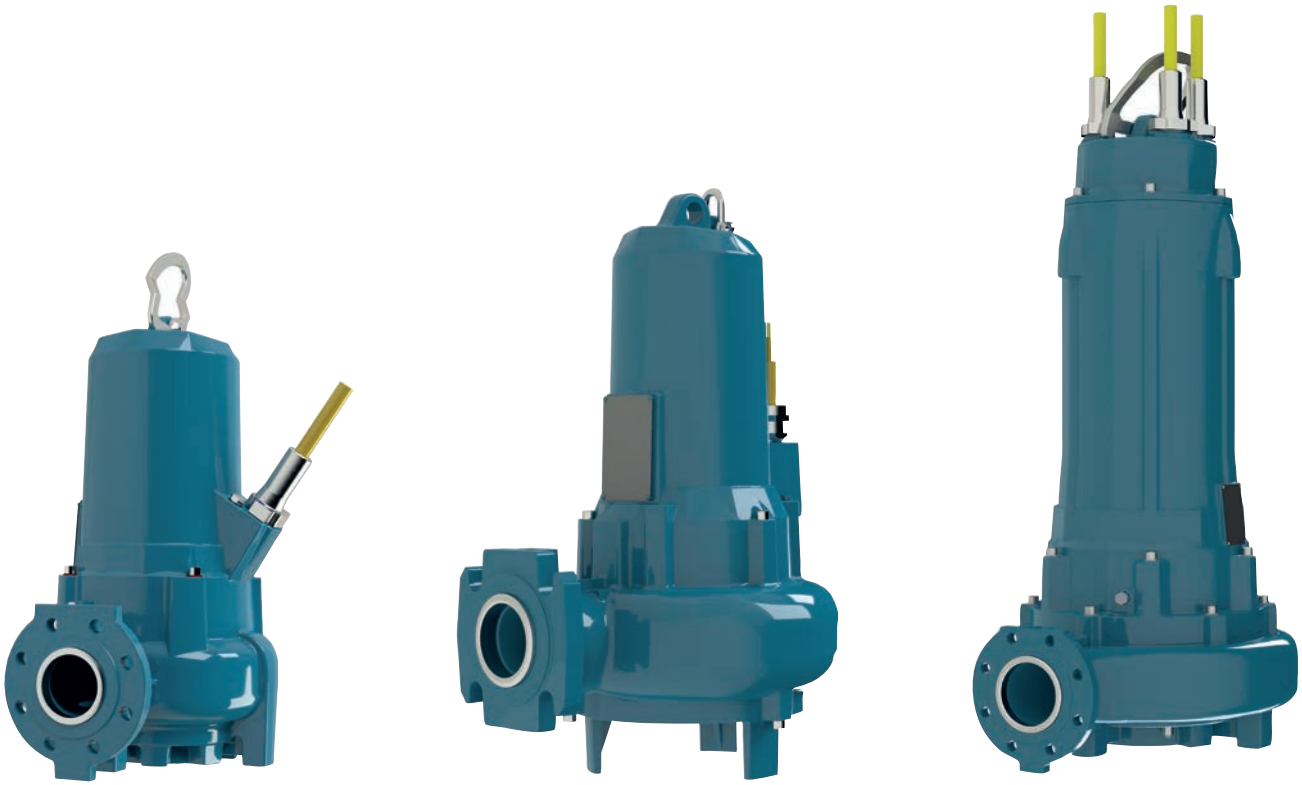

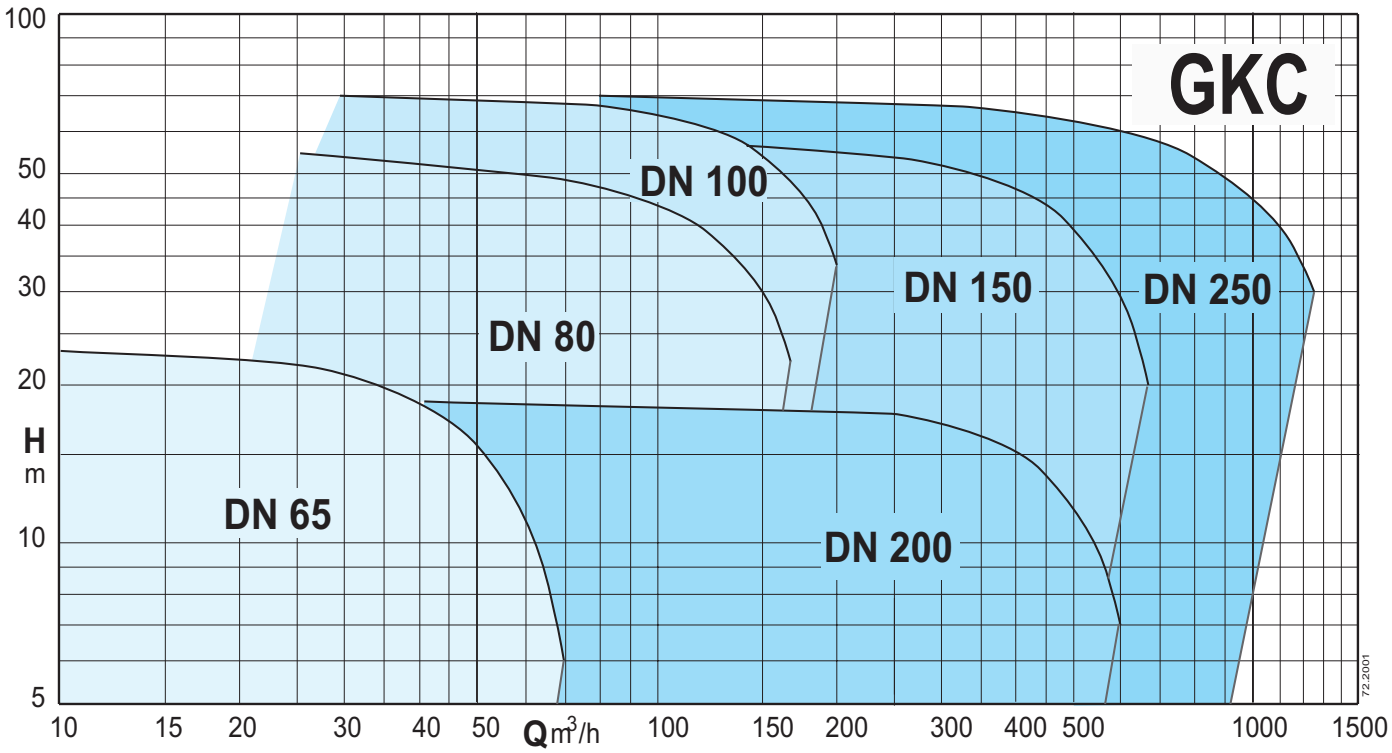


# Submersible pumps with single channel impeller

# GKC

calpeda®

## Construction

Submersible pumps with single-channel impeller.
It offers reliability against clogging and features wide through sections and a good resistance to wear, low mechanical action on the fluid, high hydraulic efficiency.
Low vibrations thanks to the dynamically balanced impeller.
Delivery port DN 65-80-100-150-200-250

## Applications

Particularly suitable for clean water, water containing solid and fibrous solids, cloacal water, sewage and sludge.
Particularly suitable for the emptying of sewage from cesspits or primary collection tanks or industrial waste water.
Solid passage from 40 to 163 mm.

## Operating conditions

Liquid temperature: from 0°C to +40°C.
Maximum immersion depth: 20m (with cable of suitable length).
Maximum working pressure: 80 m.w.c.
pH of the liquid to be lifted: 4 ÷ 10
Continuous service (with water at minimum immersion level).

## Materials

Pump casing: cast iron EN-GJL250 UNI-EN 1561-11
Impeller: cast iron EN-GJL250 UNI-EN 1561-11
Motor casing: cast iron EN-GJL250 UNI-EN 1561-11 / EN-GJL450 UNI-EN 1561-11
Shaft: stainless steel X20Cr13 (AISI420)
Pump mechanical seal with flange size F - H - L - N - P
- motor side: graphite/ceramic
- pump side: silicon/ceramic carbide

Pump mechanical seal with flange size R - Z - T
- motor side: stainless steel/graphite
- pump side: Silicon carbide/silicon carbide

## Motor

2,4,6,8 pole, 50Hz induction motor.
Three-phase version: 400V ± 10%, up to 4.8kW
400/690V ± 10% from 5.8kW
Isolation class: F or H
Degree of protection: IP 68
Max number of starts per hour:
- 20 up to 5 kW
- 15 up to 10 kW
- 10 for higher powers

Cable: length 10m
Direction of rotation: clockwise top view
Motor suitable for operation with frequency converter.

## Special features on request

(Check feasibility according to the model with our Technical Sales Office).
ATEX versions complying with EN60079-0 - EN60079-1 type I M2 Ex db h I Mb, II 2G Ex db h IIB T4 Gb.
Impeller in stainless steel AISI 316 or bronze.
Bronze impeller seat ring.
Cable length up to 40 m
Other mechanical seal.
Higher or lower liquid or ambient temperatures.
Ceramic coating.
Internal anti-erosion coating, external anti-corrosion.

## Designation

GKC4 100-80A-0058Z-X-R
GK = Series
C = Single-channel impeller
4 = Number of poles
100 = Delivery port diameter in mm
80 = Free passage in mm
A = Impeller trim
0058 = Motor size (P2 = 5,8 kW)
Z = Size of electric motor flanging
X = Versione ATEX
R = With cooling jacket / oil chamber

## Technical data

| TYPE | Version | Dry chamber version | | Probes | | Cable | | Class | Duck foot coupling | Submersible pump rest | Dry chamber pump rest | Dry chamber pump support |
|---|---|---|---|---|---|---|---|---|---|---|---|---|
| | ATEX | Vertical | Horizontal | thermal | conductivity | NSSHOU-J | H07RN-F | Isolation /Efficiency | | | | |
| GKC2 65-40G-0020F | o | – | – | o | o | – | • | H / IE3 | SAK 65-65-2 | – | – | – |
| GKC2 65-40D-0020F | o | – | – | o | o | – | • | H / IE3 | SAK 65-65-2 | – | – | – |
| GKC2 65-40A-0025F | o | – | – | o | o | – | • | H / IE3 | SAK 65-65-2 | – | – | – |
| GKC2 65-40A-0048H | o | # | # | • | • | • | – | H / IE3 | SAK 65-65-2 | APK 80 | APCK 65 | SOK80/N3 |
| GKC2 65-40D-0048H | o | # | # | • | • | • | – | H / IE3 | SAK 65-65-2 | APK 80 | APCK 65 | SOK80/N3 |
| GKC2 65-40G-0038H | o | # | # | • | • | • | – | H / IE3 | SAK 65-65-2 | APK 80 | APCK 65 | SOK80/N3 |
| GKC2 65-40L-0038H | o | # | # | • | • | • | – | H / IE3 | SAK 65-65-2 | APK 80 | APCK 65 | SOK80/N3 |
| GKC6 80-75G-0015H | o | # | # | • | • | • | – | H / IE3 | SAK 80-80-2 | APK 80 | APCK 80 | SOK80/N3 |
| GKC6 80-75D-0015H | o | # | # | • | • | • | – | H / IE3 | SAK 80-80-2 | APK 80 | APCK 80 | SOK80/N3 |
| GKC6 80-75A-0015H | o | # | # | • | • | • | – | H / IE3 | SAK 80-80-2 | APK 80 | APCK 80 | SOK80/N3 |
| GKC4 80-75A-0029H | o | # | # | • | • | • | – | H / IE3 | SAK 80-80-2 | APK 80 | APCK 80 | SOK80/N3 |
| GKC4 80-76A-0021F | o | – | – | • | • | • | – | H / IE3 | SAK 80-80-2 | – | – | – |
| GKC4 80-76D-0021F | o | – | – | • | • | • | – | H / IE3 | SAK 80-80-2 | – | – | – |
| GKC4 80-76G-0016F | o | – | – | • | • | • | – | H / IE3 | SAK 80-80-2 | – | – | – |
| GKC4 80-76L-0016F | o | – | – | • | • | • | – | H / IE3 | SAK 80-80-2 | – | – | – |
| GKC4 80-80A-0058H | o | # | # | • | • | • | – | H / IE3 | SAK 80-80-2 | APK 100 | APCK 100 | SOK100/N3 |
| GKC4 80-80G-0037H | o | # | # | • | • | • | – | H / IE3 | SAK 80-80-2 | APK 100 | APCK 100 | SOK100/N3 |
| GKC4 80-75G-0016H | o | # | # | • | • | • | – | H / IE3 | SAK 80-80-2 | APK 80 | APCK 80 | SOK80/N3 |
| GKC4 80-75D-0021H | o | # | # | • | • | • | – | H / IE3 | SAK 80-80-2 | APK 80 | APCK 80 | SOK80/N3 |
| GKC4 80-80L-0029H | o | # | # | • | • | • | – | H / IE3 | SAK 80-80-2 | APK 100 | APCK 100 | SOK100/N3 |
| GKC4 80-80D-0046H | o | # | # | • | • | • | – | H / IE3 | SAK 80-80-2 | APK 100 | APCK 100 | SOK100/N3 |
| GKC2 80-80P-0165L | o | # | # | • | • | • | – | H / IE3 | SAK 80-80-2 | APK 80 | APCK 80 | SOK80/N3 |
| GKC2 80-80I-0065L | o | # | # | • | • | • | – | H / IE3 | SAK 80-80-2 | APK 80 | APCK 80 | SOK80/N3 |
| GKC2 80-80G-0065L | o | # | # | • | • | • | – | H / IE3 | SAK 80-80-2 | APK 80 | APCK 80 | SOK80/N3 |
| GKC2 80-80E-0090L | o | # | # | • | • | • | – | H / IE3 | SAK 80-80-2 | APK 80 | APCK 80 | SOK80/N3 |
| GKC2 80-80C-0125L | o | # | # | • | • | • | – | H / IE3 | SAK 80-80-2 | APK 80 | APCK 80 | SOK80/N3 |
| GKC2 80-80A-0125L | o | # | # | • | • | • | – | H / IE3 | SAK 80-80-2 | APK 80 | APCK 80 | SOK80/N3 |

• = Standard
- = Not present
o = Optional
# = Version with oil chamber

# = In case of operation in a dry chamber or with a low level of the pumped liquid, it is necessary to introduce the cooling oil according to the quantities indicated in the use and maintenance manual

# GKC

calpeda®

## Technical data

| TYPE | Version | Dry chamber version | | Probes | | Cable | | Class | Duck foot | Submersible | Dry chamber | Dry chamber |
|---|---|---|---|---|---|---|---|---|---|---|---|---|
| | ATEX | Vertical | Horizontal | thermal | conductivity | NSSHOU-J | H07RN-F | Isolation | coupling | pump rest | pump rest | pump support |
| GKC6 100-80L-0015H | o | # | # | • | • | • | – | H / IE3 | SAK 100-100-2A | APK 100 | APCK 100 | SOK100/N3 |
| GKC6 100-80G-0015H | o | # | # | • | • | • | – | H / IE3 | SAK 100-100-2A | APK 100 | APCK 100 | SOK100/N3 |
| GKC6 100-80D-0018H | o | # | # | • | • | • | – | H / IE3 | SAK 100-100-2A | APK 100 | APCK 100 | SOK100/N3 |
| GKC6 100-80A-0018H | o | # | # | • | • | • | – | H / IE3 | SAK 100-100-2A | APK 100 | APCK 100 | SOK100/N3 |
| GKC4 100-80D-0046H | o | # | # | • | • | • | – | H / IE3 | SAK 100-100-2A | APK 100 | APCK 100 | SOK100/N3 |
| GKC4 100-80A-0058H | o | # | # | • | • | • | – | H / IE3 | SAK 100-100-2A | APK 100 | APCK 100 | SOK100/N3 |
| GKC4 100-100L-0165N | o | # | – | • | • | • | – | H / IE3 | SAK 100-100-2 | APK 150 | APCK 150A | – |
| GKC4 100-100G-0193N | o | # | – | • | • | • | – | H / IE3 | SAK 100-100-2 | APK 150 | APCK 150A | – |
| GKC4 100-100D-0193N | o | # | – | • | • | • | – | H / IE3 | SAK 100-100-2 | APK 150 | APCK 150A | – |
| GKC4 100-100A-0230N | o | # | – | • | • | • | – | H / IE3 | SAK 100-100-2 | APK 150 | APCK 150A | – |
| GKC4 100-80L-0029H | o | # | # | • | • | • | – | H / IE3 | SAK 100-100-2A | APK 100 | APCK 100 | SOK100/N3 |
| GKC4 100-80G-0037H | o | # | # | • | • | • | – | H / IE3 | SAK 100-100-2A | APK 100 | APCK 100 | SOK100/N3 |
| GKC2 100-80C-0260N | o | # | – | • | • | • | – | H / IE3 | SAK 100-100-2A | APK 100A | APCK 100 | – |
| GKC2 100-80D-0260N | o | # | – | • | • | • | – | H / IE3 | SAK 100-100-2A | APK 100A | APCK 100 | – |
| GKC2 100-80G-0260N | o | # | – | • | • | • | – | H / IE3 | SAK 100-100-2A | APK 100A | APCK 100 | – |
| GKC2 100-80F-0260N | o | # | – | • | • | • | – | H / IE3 | SAK 100-100-2A | APK 100A | APCK 100 | – |
| GKC2 100-80E-0260N | o | # | – | • | • | • | – | H / IE3 | SAK 100-100-2A | APK 100A | APCK 100 | – |
| GKC2 100-80C-0350N | o | # | – | • | • | • | – | H / IE3 | SAK 100-100-2A | APK 100A | APCK 100 | – |
| GKC2 100-80D-0350N | o | # | – | • | • | • | – | H / IE3 | SAK 100-100-2A | APK 100A | APCK 100 | – |
| GKC2 100-80B-0350N | o | # | – | • | • | • | – | H / IE3 | SAK 100-100-2A | APK 100A | APCK 100 | – |
| GKC2 100-80A-0350N | o | # | – | • | • | • | – | H / IE3 | SAK 100-100-2A | APK 100A | APCK 100 | – |
| GKC6 150-100G-0040L | o | # | # | • | • | • | – | H / IE3 | SAK 150-150-2 | APK 150 | APCK 150A | SOK150/N3 |
| GKC6 150-100D-0040L | o | # | # | • | • | • | – | H / IE3 | SAK 150-150-2 | APK 150 | APCK 150A | SOK150/N3 |
| GKC6 150-100A-0040L | o | # | # | • | • | • | – | H / IE3 | SAK 150-150-2 | APK 150 | APCK 150A | SOK150/N3 |
| GKC4 150-80D-0046H | o | # | # | • | • | • | – | H / IE3 | SAK 150-150-2 | APK 150 | APCK 150A | SOK150/N3 |
| GKC4 150-80A-0058H | o | # | # | • | • | • | – | H / IE3 | SAK 150-150-2 | APK 150 | APCK 150A | SOK150/N3 |
| GKC4 150-100G-0075L | o | # | # | • | • | • | – | H / IE3 | – | APK 150 | APCK 150A | SOK150/N3 |
| GKC4 150-100D-0105L | o | # | # | • | • | • | – | H / IE3 | – | APK 150 | APCK 150A | SOK150/N3 |
| GKC4 150-100A-0125L | o | # | # | • | • | • | – | H / IE3 | – | APK 150 | APCK 150A | SOK150/N3 |
| GKC4 150-115L-0165N | o | # | – | • | • | • | – | H / IE3 | SAK 150-200-3 | APK 150 | APCK 150A | – |
| GKC4 150-115G-0193N | o | # | – | • | • | • | – | H / IE3 | SAK 150-200-3 | APK 150 | APCK 150A | – |
| GKC4 150-115D-0210N | o | # | – | • | • | • | – | H / IE3 | SAK 150-200-3 | APK 150 | APCK 150A | – |
| GKC4 150-115A-0260N | o | # | – | • | • | • | – | H / IE3 | SAK 150-200-3 | APK 150 | APCK 150A | – |
| GKC4 150-102L-0340R | – | – | – | • | • | • | – | H / IE3 | SAK 150-200-3 | APK 150A | – | – |
| GKC4 150-102G-0420R | – | – | – | • | • | • | – | H / IE3 | SAK 150-200-3 | APK 150A | – | – |
| GKC4 150-102D-0510R | – | – | – | • | • | • | – | H / IE3 | SAK 150-200-3 | APK 150A | – | – |
| GKC4 150-102A-0620R | – | – | – | • | • | • | – | H / IE3 | SAK 150-200-3 | APK 150A | – | – |
| GKC4 150-102L-0340R-R | – | # | – | • | • | • | – | H / IE3 | SAK 150-200-3 | – | APCK 150 | – |
| GKC4 150-102G-0420R-R | – | # | – | • | • | • | – | H / IE3 | SAK 150-200-3 | – | APCK 150 | – |
| GKC4 150-102D-0510R-R | – | # | – | • | • | • | – | H / IE3 | SAK 150-200-3 | – | APCK 150 | – |
| GKC4 150-102A-0620R-R | – | # | – | • | • | • | – | H / IE3 | SAK 150-200-3 | – | APCK 150 | – |
| GKC6 200-135G-0110P | o | # | – | • | • | • | – | H / IE3 | SAK 200-250-3 | APK 150 | APCK 200 | – |
| GKC6 200-135D-0150P | o | # | – | • | • | • | – | H / IE3 | SAK 200-250-3 | APK 150 | APCK 200 | – |
| GKC6 200-135A-0195P | o | # | – | • | • | • | – | H / IE3 | SAK 200-250-3 | APK 150 | APCK 200 | – |

• = Standard
- = Not present
o = Optional
# = Version with oil chamber
$ = Version with cooling jacket
# = In case of operation in a dry chamber or with a low level of the pumped liquid, it is necessary to introduce the cooling oil according to the quantities indicated in the use and maintenance manual

# GKC

calpeda®

## Technical data

| TYPE | Version | Dry chamber version | | Probes | | Cable | | Class | Duck foot coupling | Submersible pump rest | Dry chamber pump rest | Dry chamber pump support |
|---|---|---|---|---|---|---|---|---|---|---|---|---|
| | ATEX | Vertical | Horizontal | thermal | conductivity | NSSHOU-J | H07RN-F | Isolation | | | | |
| GKC8 250-163A-0210Z | – | – | – | • | • | – | • | F | SAK 250-300-3 | APK 350 | – | – |
| GKC8 250-163A-0210Z-R | – | $ | $ | • | • | – | • | F | SAK 250-300-3 | – | APCK 250A | SOK350-200 |
| GKC6 250-163L-0250R | – | – | – | • | • | • | – | H / IE3 | SAK 250-300-3 | APK 350 | – | – |
| GKC6 250-163G-0340R | – | – | – | • | • | • | – | H / IE3 | SAK 250-300-3 | APK 350 | – | – |
| GKC6 250-163D-0420R | – | – | – | • | • | • | – | H / IE3 | SAK 250-300-3 | APK 350 | – | – |
| GKC6 250-163A-0510R | – | – | – | • | • | • | – | H / IE3 | SAK 250-300-3 | APK 350 | – | – |
| GKC6 250-163L-0250R-R | – | # | – | • | • | • | – | H / IE3 | SAK 250-300-3 | – | APCK 250A | SOK350-200 |
| GKC6 250-163G-0340R-R | – | # | – | • | • | • | – | H / IE3 | SAK 250-300-3 | – | APCK 250A | SOK350-200 |
| GKC6 250-163D-0420R-R | – | # | – | • | • | • | – | H / IE3 | SAK 250-300-3 | – | APCK 250A | SOK350-200 |
| GKC6 250-163A-0510R-R | – | # | – | • | • | • | – | H / IE3 | SAK 250-300-3 | – | APCK 250A | SOK350-250 |
| GKC4 250-163M-0820R | – | – | – | • | • | • | – | H / IE3 | SAK 250-300-3A | APK 350 | – | – |
| GKC4 250-163L-1000T | – | – | – | • | • | – | • | F | SAK 250-300-3A | APK 350 | – | – |
| GKC4 250-163H-1000T | – | – | – | • | • | – | • | F | SAK 250-300-3A | APK 350 | – | – |
| GKC4 250-163G-1200T | – | – | – | • | • | – | • | F | SAK 250-300-3A | APK 350 | – | – |
| GKC4 250-163E-1450T | – | – | – | • | • | – | • | F | SAK 250-300-3A | APK 350 | – | – |
| GKC4 250-163T-1450T | – | – | – | • | • | – | • | F | SAK 250-300-3A | APK 350 | – | – |
| GKC4 250-163B-1450T | – | – | – | • | • | – | • | F | SAK 250-300-3A | APK 350 | – | – |
| GKC4 250-163A-1800T | – | – | – | • | • | – | • | F | SAK 250-300-3A | APK 350 | – | – |
| GKC4 250-163M-0820R-R | – | # | – | • | • | • | – | H / IE3 | SAK 250-300-3A | – | APCK 250A | – |
| GKC4 250-163L-1000T-R | – | $ | – | • | • | – | • | F | SAK 250-300-3A | – | APCK 250A | SOK350-280 |
| GKC4 250-163H-1000T-R | – | $ | – | • | • | – | • | F | SAK 250-300-3A | – | APCK 250A | SOK350-280 |
| GKC4 250-163G-1200T-R | – | $ | – | • | • | – | • | F | SAK 250-300-3A | – | APCK 250A | SOK350-280 |
| GKC4 250-163E-1450T-R | – | $ | – | • | • | – | • | F | SAK 250-300-3A | – | APCK 250A | SOK350-280 |
| GKC4 250-163T-1450T-R | – | $ | – | • | • | – | • | F | SAK 250-300-3A | – | APCK 250A | SOK350-280 |
| GKC4 250-163B-1450T-R | – | $ | – | • | • | – | • | F | SAK 250-300-3A | – | APCK 250A | SOK350-280 |
| GKC4 250-163A-1800T-R | – | $ | – | • | • | – | • | F | SAK 250-300-3A | – | APCK 250A | SOK350-315 |

• = Standard
- = Not present
o = Optional
# = Version with oil chamber
$ = Version with cooling jacket
# = In case of operation in a dry chamber or with a low level of the pumped liquid, it is necessary to introduce the cooling oil according to the quantities indicated in the use and maintenance manual

# GKC

calpeda®

## Performance

### n ≈ 2850 1/min

| Model | 400V | P2 | Q = Flow | | | | | | | | | | | | | | | | | | | |
|---|---|---|---|---|---|---|---|---|---|---|---|---|---|---|---|---|---|---|---|---|---|---|
| | | | m³/h | 0 | 10,8 | 14,4 | 18 | 21,5 | 25,2 | 28,8 | 32,4 | 36 | 43,2 | 45 | 50,4 | 54 | 57,6 | 63 | 64,8 | 72 | 81 | 90 |
| | | | l/min | | 180 | 240 | 300 | 358 | 420 | 480 | 540 | 600 | 720 | 750 | 840 | 900 | 960 | 1050 | 1080 | 1200 | 1350 | 1500 |
| | A | kW | H (m) = Total head | | | | | | | | | | | | | | | | | | | |
| GKC2 65-40G-0020F | 4,1 | 2 | | 19,5 | 16,1 | 15,2 | 14,4 | 13,5 | 12,7 | 12 | 11,2 | 10,4 | 8,9 | - | 7,2 | - | - | - | - | - | - | - |
| GKC2 65-40D-0020F | 4,1 | 2 | | 24,1 | 18,1 | 17,2 | 16,4 | 15,5 | 14,7 | 13,8 | 13 | 12,2 | 10,4 | - | 8,6 | - | 6,7 | - | - | - | - | - |
| GKC2 65-40A-0025F | 5,5 | 2,5 | | 27,9 | 21,8 | 20,7 | 19,7 | 18,8 | 17,9 | 17 | 16,2 | 15,3 | 13,6 | - | 11,8 | - | 9,8 | - | 7,7 | 5,3 | - | - |
| GKC2 65-40L-0038H | 7,5 | 3,8 | | 25 | 20,8 | 19,8 | 18,8 | 17,8 | 16,9 | 16 | 15,1 | 14,3 | - | 12,1 | - | 9,8 | - | 7,1 | - | - | - | - |
| GKC2 65-40G-0038H | 7,5 | 3,8 | | 26,2 | - | 22,6 | 21,7 | 20,8 | 20 | 19,1 | 18,2 | 17,3 | - | 15 | - | 12,6 | - | 10,1 | - | 7,5 | - | - |
| GKC2 65-40D-0048H | 8,9 | 4,8 | | 31 | 27,9 | 26,8 | 25,8 | 24,9 | 24 | 23,2 | 22,4 | 21,5 | - | 19,4 | - | 17,2 | - | 14,9 | - | 12,5 | 10,2 | 7,9 |
| GKC2 65-40A-0048H | 8,9 | 4,8 | | 35 | - | 29,5 | 28,3 | 27,3 | 26,4 | 25,7 | 24,9 | 24,1 | - | 22,1 | - | 19,8 | - | - | - | - | - | - |

### n ≈ 950 1/min

| Model | 400V | P2 | Q = Flow | | | | | | | | | | | | |
|---|---|---|---|---|---|---|---|---|---|---|---|---|---|---|---|
| | | | m³/h | 0 | 18 | 21,5 | 25,2 | 28,8 | 32,4 | 36 | 43,2 | 50,4 | 57,6 | 64,8 | 72 | 79,2 |
| | | | l/min | | 300 | 358 | 420 | 480 | 540 | 600 | 720 | 840 | 960 | 1080 | 1200 | 1320 |
| | A | kW | H (m) = Total head | | | | | | | | | | | | | |
| GKC6 80-75G-0015H | 3,4 | 1,5 | | 4,3 | 3,6 | 3,4 | 3,2 | 3 | 2,9 | 2,7 | 2,3 | 1,8 | 1,3 | 0,7 | - | - |
| GKC6 80-75D-0015H | 3,4 | 1,5 | | 5,7 | 4,3 | 4,2 | 4 | 3,9 | 3,7 | 3,5 | 3,1 | 2,7 | 2,2 | 1,7 | - | - |
| GKC6 80-75A-0015H | 3,4 | 1,5 | | 7,2 | - | 5,5 | 5,3 | 5,1 | 4,9 | 4,7 | 4,3 | 3,9 | 3,5 | 3,1 | 2,5 | 1,9 |

### n ≈ 1450 1/min

| Model | 400V | P2 | Q = Flow | | | | | | | | | | | | | | | |
|---|---|---|---|---|---|---|---|---|---|---|---|---|---|---|---|---|---|---|
| | | | m³/h | 0 | 21,5 | 25,2 | 28,8 | 32,4 | 36 | 45 | 54 | 63 | 72 | 81 | 90 | 99 | 108 |
| | | | l/min | | 358 | 420 | 480 | 540 | 600 | 750 | 900 | 1050 | 1200 | 1350 | 1500 | 1650 | 1800 |
| | A | kW | H (m) = Total head | | | | | | | | | | | | | | |
| GKC4 80-76L-0016F | 3,7 | 1,6 | | 9,6 | - | - | 6,8 | 6,6 | 6,4 | 6 | 5,4 | 4,9 | 4,3 | 3,7 | 3,2 | - | - |
| GKC4 80-76G-0016F | 3,7 | 1,6 | | 11 | 8,2 | 8 | 7,8 | 7,6 | 7,4 | 6,8 | 6,3 | 5,7 | 5,1 | 4,4 | 3,7 | - | - |
| GKC4 80-76D-0021F | 5,1 | 2,1 | | 12,6 | 9,3 | 9,1 | 9 | 8,8 | 8,6 | 8,1 | 7,5 | 6,9 | 6,3 | 5,6 | 4,9 | 4,2 | 3,5 |
| GKC4 80-76A-0021F | 5,1 | 2,1 | | 13,9 | 10,5 | 10,2 | 10 | 9,8 | 9,7 | 9,2 | 8,7 | 8,1 | 7,5 | 6,9 | - | - | - |

### n ≈ 1450 1/min

| Model | 400V | | 690V | P2 | Q = Flow | | | | | | | | | | | | | |
|---|---|---|---|---|---|---|---|---|---|---|---|---|---|---|---|---|---|---|
| | | | | | m³/h | 0 | 21,5 | 28,8 | 36 | 54 | 72 | 90 | 108 | 126 | 144 | 162 | 180 | 198 | 216 |
| | | | | | l/min | 0 | 358 | 480 | 600 | 900 | 1200 | 1500 | 1800 | 2100 | 2400 | 2700 | 3000 | 3300 | 3600 |
| | A | | | kW | H (m) = Total head | | | | | | | | | | | | | | |
| GKC4 80-75G-0016H | 3,4 | - | - | 1,6 | | 10,8 | - | 8,1 | 7,5 | 6,1 | 4,7 | 3,2 | - | - | - | - | - | - | - |
| GKC4 80-75D-0021H | 5,0 | - | - | 2,1 | | 13,2 | 10,2 | 9,8 | 9,4 | 8,3 | 6,8 | 5,1 | - | - | - | - | - | - | - |
| GKC4 80-75A-0029H | 6,1 | - | - | 2,9 | | 15,9 | 13,2 | 12,6 | 12 | 10,5 | 9,1 | 7,6 | 5,8 | - | - | - | - | - | - |
| GKC4 80-80L-0029H | 6,1 | - | - | 2,9 | | 14,9 | - | - | 10,2 | 9,1 | 7,7 | 6,2 | 4,7 | 3 | - | - | - | - | - |
| GKC4 80-80G-0037H | 7,7 | - | - | 3,7 | | 16,8 | 12,7 | 12,3 | 11,9 | 10,8 | 9,6 | 8,2 | 6,6 | 5 | 3,3 | - | - | - | - |
| GKC4 80-80D-0046H | 9,5 | - | - | 4,6 | | 19,3 | - | 14,5 | 13,9 | 12,8 | 11,7 | 10,5 | 9,1 | 7,5 | 5,9 | 4,1 | - | - | - |
| GKC4 80-80A-0058H | - | 11,9 | 6,9 | 5,8 | | 21,4 | - | - | 16,7 | 15,6 | 14,4 | 13,2 | 12 | 10,5 | 8,9 | 7,2 | 5,3 | 3,4 | 1,3 |

### n ≈ 2850 1/min

| Model | 400V | 690V | P2 | Q = Flow | | | | | | | | | | | | |
|---|---|---|---|---|---|---|---|---|---|---|---|---|---|---|---|---|
| | | | | m³/h | 0 | 18 | 21,5 | 28,8 | 36 | 54 | 72 | 90 | 108 | 126 | 144 | 162 |
| | | | | l/min | | 300 | 358 | 480 | 600 | 900 | 1200 | 1500 | 1800 | 2100 | 2400 | 2700 |
| | A | | kW | H (m) = Total head | | | | | | | | | | | | |
| GKC2 80-80I-0065L | 11,8 | 6,8 | 6,5 | | 28,1 | - | 22,1 | 20,3 | 18,7 | 15,4 | 12,7 | 10,2 | 7,5 | 4,6 | - | - |
| GKC2 80-80G-0065L | 11,8 | 6,8 | 6,5 | | 33,9 | - | 28,3 | 26,3 | 24,7 | 21,7 | 18,9 | 15,8 | 12,6 | 9,5 | - | - |
| GKC2 80-80E-0090L | 16,1 | 9,3 | 9 | | 42,1 | 36,1 | 34,8 | 32,5 | 30,5 | 27 | 24,3 | 21,3 | 17,5 | 13,3 | - | - |
| GKC2 80-80C-0125L | 22,4 | 12,9 | 12,5 | | 47,9 | 41,3 | 40,1 | 37,7 | 35,6 | 31,4 | 28,2 | 25 | 21,3 | 17,3 | 13,4 | - |
| GKC2 80-80A-0125L | 22,4 | 12,9 | 12,5 | | 53,6 | - | 46,1 | 43,5 | 41,2 | 36,9 | 33,9 | 30,9 | 27 | 22,4 | 17,6 | - |
| GKC2 80-80P-0165L | 31 | 17,9 | 16,5 | | 62,9 | - | - | 53,6 | 51 | 45,9 | 42 | 38,8 | 35,6 | 32,1 | 28,1 | 22,9 |

# GKC

calpeda®

## Performance

### n ≈ 950 1/min

| Model | 400V | P2 | | | | | | | | | | | | | | | | | | |
|---|---|---|---|---|---|---|---|---|---|---|---|---|---|---|---|---|---|---|---|---|
| | | | Q = Flow | | | | | | | | | | | | | | | | | |
| | | | m³/h | 0 | 21,5 | 25,2 | 28,8 | 32,4 | 36 | 45 | 54 | 63 | 72 | 81 | 90 | 99 | 108 | 117 | 126 | 135 |
| | | | l/min | | 358 | 420 | 480 | 540 | 600 | 750 | 900 | 1050 | 1200 | 1350 | 1500 | 1650 | 1800 | 1950 | 2100 | 2250 |
| | A | kW | H (m) = Total head | | | | | | | | | | | | | | | | | |
| GKC6 100-80L-0015H | 3,4 | 1,5 | | 5,4 | 4,7 | 4,6 | 4,5 | 4,3 | 4,2 | 3,9 | 3,5 | 3,2 | 2,8 | 2,5 | 2,1 | - | - | - | - | - |
| GKC6 100-80G-0015H | 3,4 | 1,5 | | 7,2 | 5,5 | 5,4 | 5,2 | 5,1 | 4,9 | 4,5 | 4,2 | 3,8 | 3,5 | 3,1 | 2,6 | 2,1 | 1,5 | - | - | - |
| GKC6 100-80D-0018H | 4,1 | 1,8 | | 8,7 | 6,8 | 6,6 | 6,4 | 6,3 | 6,1 | 5,7 | 5,4 | 5 | 4,6 | 4,3 | 3,9 | 3,5 | 3,1 | 2,7 | 2,2 | - |
| GKC6 100-80A-0018H | 4,1 | 1,8 | | 9,5 | 7,5 | 7,4 | 7,3 | 7,2 | 7 | 6,7 | 6,4 | 6,1 | 5,7 | 5,4 | 5 | 4,6 | 4,1 | 3,7 | 3,2 | 2,6 |

### n ≈ 1450 1/min

| Model | 400V | | 690V | P2 | | | | | | | | | | | | | | | | | |
|---|---|---|---|---|---|---|---|---|---|---|---|---|---|---|---|---|---|---|---|---|---|
| | | | | | Q = Flow | | | | | | | | | | | | | | | | |
| | | | | | m³/h | 0 | 28,8 | 36 | 54 | 72 | 90 | 108 | 126 | 144 | 162 | 180 | 198 | 216 | 234 | 252 | 270 |
| | | | | | l/min | 0 | 480 | 600 | 900 | 1200 | 1500 | 1800 | 2100 | 2400 | 2700 | 3000 | 3300 | 3600 | 3900 | 4200 | 4500 |
| | A | | | kW | | H (m) = Total head | | | | | | | | | | | | | | | |
| GKC4 100-80L-0029H | 6,1 | - | - | 2,9 | | 14,3 | - | 10,1 | 9,1 | 8 | 6,9 | 5,8 | 4,6 | - | - | - | - | - | - | - | - |
| GKC4 100-80G-0037H | 7,7 | - | - | 3,7 | | 16,9 | 12,6 | 12,2 | 11,3 | 10,2 | 9,2 | 8 | 6,8 | 5,5 | - | - | - | - | - | - | - |
| GKC4 100-80D-0046H | 9,5 | - | - | 4,6 | | 19,3 | - | 13,9 | 13 | 12 | 11 | 10 | 8,9 | 7,7 | 6,5 | - | - | - | - | - | - |
| GKC4 100-80A-0058H | - | 11,9 | 6,9 | 5,8 | | 21,2 | 17,7 | 16,9 | 15,5 | 14,4 | 13,4 | 12,3 | 11,2 | 10 | 8,6 | 7,1 | 5,4 | 3,7 | - | - | - |
| GKC4 100-100L-0165N | - | 31,2 | 18 | 16,5 | | 27,4 | - | - | - | 21,4 | 20,7 | 20 | 19,3 | 18,5 | 17,7 | 16,8 | 15,7 | 14,6 | 13,4 | 12 | 10,7 |
| GKC4 100-100G-0193N | - | 38,8 | 22,4 | 19,3 | | 31 | - | - | - | 24,9 | 24,1 | 23,3 | 22,4 | 21,5 | 20,6 | 19,6 | 18,6 | 17,5 | 16,3 | 15,1 | 13,8 |
| GKC4 100-100D-0193N | - | 38,8 | 22,4 | 19,3 | | 34,3 | - | - | - | 29 | 27,6 | 26,4 | 25,2 | 24,1 | 23 | 21,9 | 20,8 | 19,7 | 18,5 | 17,3 | 16 |
| GKC4 100-100A-0230N | - | 42,4 | 24,5 | 23 | | 39,6 | - | - | - | 34 | 32,7 | 31,4 | 30,1 | 29 | 27,9 | 26,8 | 25,7 | 24,7 | 23,5 | 22,3 | - |

### n ≈ 2850 1/min

| Model | 400V | 690V | P2 | | | | | | | | | | | | | |
|---|---|---|---|---|---|---|---|---|---|---|---|---|---|---|---|---|
| | | | | Q = Flow | | | | | | | | | | | | |
| | | | | m³/h | 0 | 28,8 | 36 | 54 | 72 | 90 | 108 | 126 | 144 | 162 | 180 | 198 |
| | | | | l/min | | 480 | 600 | 900 | 1200 | 1500 | 1800 | 2100 | 2400 | 2700 | 3000 | 3300 |
| | A | | kW | H (m) = Total head | | | | | | | | | | | | |
| GKC2 100-80C-0260N | 44,6 | 25,7 | 26 | | 73,7 | - | - | 56,2 | 53,1 | 49,9 | 46,6 | - | - | - | - | - |
| GKC2 100-80D-0260N | 44,6 | 25,7 | 26 | | 67,9 | - | 53,7 | 50,8 | 47,9 | 45 | 42,2 | 39,4 | 36,6 | - | - | - |
| GKC2 100-80G-0260N | 44,6 | 25,7 | 26 | | 49,4 | 39 | 37,6 | 34,7 | 31,9 | 29,2 | 26,4 | 23,5 | 20,7 | 17,7 | 14,6 | 11,4 |
| GKC2 100-80F-0260N | 44,6 | 25,7 | 26 | | 54,5 | 44,6 | 42,6 | 39,1 | 36,2 | 33,4 | 30,6 | 27,8 | 24,8 | 21,8 | 18,8 | 15,7 |
| GKC2 100-80E-0260N | 44,6 | 25,7 | 26 | | 59,3 | - | 46,6 | 43,7 | 40,9 | 38,2 | 35,4 | 32,5 | 29,6 | 26,7 | 23,6 | - |
| GKC2 100-80C-0350N | 57,8 | 33,4 | 35 | | 73,9 | - | - | 56,3 | 53,3 | 50,3 | 47,2 | 44,1 | 40,9 | 37,7 | 34,6 | - |
| GKC2 100-80D-0350N | 57,8 | 33,4 | 35 | | 68 | - | 54,3 | 51,5 | 48,6 | 45,8 | 42,9 | 39,9 | 36,9 | 33,9 | 30,8 | - |
| GKC2 100-80B-0350N | 57,8 | 33,4 | 35 | | 77 | - | - | 59,3 | 56,1 | 53,1 | 50,2 | 47,4 | 44,7 | 41,9 | 39 | - |
| GKC2 100-80A-0350N | 57,8 | 33,4 | 35 | | 80,1 | - | - | 66,2 | 61,9 | 58,4 | 55,4 | 52,6 | 49,9 | 47 | - | - |

### n ≈ 950 1/min

| Model | 400V | P2 | | | | | | | | | | | | | | | | | | |
|---|---|---|---|---|---|---|---|---|---|---|---|---|---|---|---|---|---|---|---|---|
| | | | Q = Flow | | | | | | | | | | | | | | | | | |
| | | | m³/h | 0 | 10,8 | 14,4 | 21,5 | 28,8 | 36 | 54 | 72 | 90 | 108 | 126 | 144 | 162 | 180 | 198 | 216 |
| | | | l/min | | 180 | 240 | 358 | 480 | 600 | 900 | 1200 | 1500 | 1800 | 2100 | 2400 | 2700 | 3000 | 3300 | 3600 |
| | A | kW | H (m) = Total head | | | | | | | | | | | | | | | | | |
| GKC6 150-100G-0040L | 9 | 4 | | 9,3 | - | - | - | - | 7,3 | 6,8 | 6,2 | 5,7 | 5 | 4,4 | 3,7 | 3 | - | - | - |
| GKC6 150-100D-0040L | 9 | 4 | | 10,9 | 10 | 9,7 | 9,2 | 8,8 | 8,5 | 7,8 | 7,3 | 6,8 | 6,3 | 5,7 | 5,1 | 4,4 | 3,6 | - | - |
| GKC6 150-100A-0040L | 9 | 4 | | 12,4 | - | - | - | - | 9,8 | 9,1 | 8,6 | 8,1 | 7,6 | 7,1 | 6,5 | 5,9 | 5,2 | 4,5 | 3,7 |

# GKC

calpeda®

## Performance

### n ≈ 1450 1/min

| Model | 400V | | 690V | P2 | Q = Flow | | | | | | | | | | | | | | | | | | | | |
|---|---|---|---|---|---|---|---|---|---|---|---|---|---|---|---|---|---|---|---|---|---|---|---|---|---|
| | | | | | m³/h | 0 | 54 | 72 | 90 | 108 | 126 | 144 | 162 | 180 | 198 | 216 | 234 | 252 | 270 | 288 | 324 | 360 | 450 | 540 | 630 |
| | | | | | l/min | 0 | 900 | 1200 | 1500 | 1800 | 2100 | 2400 | 2700 | 3000 | 3300 | 3600 | 3900 | 4200 | 4500 | 4800 | 5400 | 6000 | 7500 | 9000 | 10500 |
| | A | | | kW | H (m) = Total head | | | | | | | | | | | | | | | | | | | | |
| GKC4 150-80D-0046H | 9,5 | - | - | 4,6 | | 12,1 | 10,4 | 9,8 | 9,1 | 8,3 | 7,6 | 6,9 | 6,2 | 5,5 | 4,8 | 4 | - | - | - | - | - | - | - | - | - |
| GKC4 150-80A-0058H | - | 11,9 | 6,9 | 5,8 | | 18,1 | 13,5 | 12,8 | 12,1 | 11,3 | 10,5 | 9,8 | 9 | 8,2 | 7,4 | 6,6 | 5,8 | 4,9 | 3,9 | - | - | - | - | - | - |
| GKC4 150-100G-0075L | - | 15,3 | 8,8 | 7,5 | | 20,2 | 16 | 14,9 | 14,1 | 13,4 | 12,6 | 11,8 | 10,9 | 10 | - | 8,1 | - | 6,1 | - | - | - | - | - | - | - |
| GKC4 150-100D-0105L | - | 20 | 11,5 | 10,5 | | 24,1 | 19 | 18,3 | 17,6 | 16,8 | 16 | 15,1 | 14,3 | 13,4 | - | 11,6 | - | 9,7 | - | 7,6 | 5,1 | - | - | - | - |
| GKC4 150-100A-0125L | - | 24 | 13,9 | 12,5 | | 28,9 | 23 | 21,6 | 20,7 | 19,9 | 19,1 | 18,4 | 17,6 | 16,8 | - | 15 | - | 13 | - | 10,9 | 8,5 | 5,5 | - | - | - |
| GKC4 150-115L-0165N | - | 31,2 | 18 | 16,5 | | 27,6 | - | 21,7 | 20,8 | 20,1 | 19,3 | 18,6 | 17,9 | 17,1 | - | 15,6 | - | 14 | - | 12,2 | 10,4 | 8,5 | - | - | - |
| GKC4 150-115G-0193N | - | 38,8 | 22,4 | 19,3 | | 32 | - | 26,1 | 24,9 | 23,8 | 22,9 | 22 | 21,2 | 20,4 | - | 18,8 | - | 17,1 | - | 15,3 | 13,4 | 11,3 | - | - | - |
| GKC4 150-115D-0210N | - | 39 | 22,5 | 21 | | 34,9 | - | 28,4 | 27,3 | 26,4 | 25,6 | 24,8 | 24 | 23,2 | - | 21,5 | - | 19,7 | - | 17,8 | 15,7 | 13,6 | - | - | - |
| GKC4 150-115A-0260N | - | 47,2 | 27,3 | 26 | | 39,9 | - | 33 | 31,7 | 30,6 | 29,7 | 28,8 | 27,9 | 27,1 | - | 25,4 | - | 23,7 | - | 21,9 | 20 | 18 | 11,9 | - | - |
| GKC4 150-102L-0340R | - | 62,5 | 36,1 | 34 | | 45,5 | - | - | - | 36,7 | 35,5 | 34,3 | 33,2 | 32,2 | - | 30,3 | - | 28,6 | - | 26,9 | 25,2 | 23,5 | 19,1 | 14,3 | 9,1 |
| GKC4 150-102G-0420R | - | 75,5 | 43,6 | 42 | | 51,7 | - | - | - | 40,8 | 39,9 | 39 | 38,1 | 37,2 | - | 35,5 | - | 33,8 | - | 32,3 | 30,8 | 29,2 | 25 | 20 | 14,5 |
| GKC4 150-102D-0510R | - | 90,5 | 52,3 | 51 | | 58 | - | - | - | 47,2 | 46 | 44,9 | 43,8 | 42,7 | - | 40,7 | - | 38,9 | - | 37,1 | 35,4 | 33,7 | 29,2 | 23,7 | 16,9 |
| GKC4 150-102A-0620R | - | 109,5 | 63,2 | 62 | | 64,8 | - | - | - | 52,7 | 51,3 | 50,1 | 48,9 | 47,9 | - | 45,9 | - | 44,2 | - | 42,6 | 40,9 | 39,2 | 34,5 | 28,9 | 22,1 |
| GKC4 150-102L-0340R-R | - | 65,8 | 37,6 | 34 | | 45,5 | - | - | - | 35,8 | 34,5 | 33,4 | 32,3 | 31,2 | - | 29,3 | - | 27,5 | - | 25,9 | 24,2 | 22,5 | 17,8 | 12,5 | 7,1 |
| GKC4 150-102G-0420R-R | - | 80,5 | 46,0 | 42 | | 51,7 | - | - | - | 41,3 | 40,1 | 39 | 37,9 | 36,8 | - | 34,8 | - | 32,9 | - | 31,1 | 29,3 | 27,5 | 22,8 | 17,2 | 10,6 |
| GKC4 150-102D-0510R-R | - | 93,5 | 53,4 | 51 | | 58 | - | - | - | 46,8 | 45,6 | 44,5 | 43,4 | 42,3 | - | 40,3 | - | 38,4 | - | 36,5 | 34,7 | 32,8 | 28 | 22,1 | 15,1 |
| GKC4 150-102A-0620R-R | - | 117 | 66,9 | 62 | | 64,8 | - | - | - | 52 | 50,7 | 49,7 | 48,7 | 47,8 | - | 45,9 | - | 44,1 | - | 42,2 | 40,3 | 38,4 | 33,5 | 27,8 | 20,8 |

### n ≈ 950 1/min

| Model | 400V | 690V | P2 | Q = Flow | | | | | | | | | | | | | | |
|---|---|---|---|---|---|---|---|---|---|---|---|---|---|---|---|---|---|---|
| | | | | m³/h | 0 | 90 | 108 | 126 | 144 | 162 | 180 | 216 | 252 | 288 | 324 | 360 | 450 | 540 |
| | | | | l/min | | 1500 | 1800 | 2100 | 2400 | 2700 | 3000 | 3600 | 4200 | 4800 | 5400 | 6000 | 7500 | 9000 |
| | A | | kW | H (m) = Total head | | | | | | | | | | | | | | |
| GKC6 200-135G-0110P | 23,8 | 13,7 | 11 | | 13 | - | 11,1 | 10,8 | 10,5 | 10,2 | 9,9 | 9,3 | 8,6 | 7,9 | 7,1 | 6,3 | 4,3 | - |
| GKC6 200-135D-0150P | 33 | 19,1 | 15 | | 20,3 | 16,7 | 16,2 | 15,8 | 15,4 | 15 | 14,6 | 13,7 | 12,9 | 12,1 | 11,2 | 10,4 | 8,1 | 5,7 |
| GKC6 200-135A-0195P | 40,2 | 23,2 | 19,5 | | 23,2 | 19,6 | 19,2 | 18,7 | 18,3 | 17,9 | 17,5 | 16,7 | 15,9 | 15,1 | 14,3 | 13,5 | 11,3 | 8,9 |

### n ≈ 725 1/min

| Model | 400V | 690V | P2 | Q = Flow | | | | | | | | | | | | | | | | | |
|---|---|---|---|---|---|---|---|---|---|---|---|---|---|---|---|---|---|---|---|---|---|
| | | | | m³/h | 0 | 108 | 126 | 144 | 162 | 180 | 216 | 252 | 288 | 324 | 360 | 450 | 540 | 630 | 720 | 810 | 900 |
| | | | | l/min | | 1800 | 2100 | 2400 | 2700 | 3000 | 3600 | 4200 | 4800 | 5400 | 6000 | 7500 | 9000 | 10500 | 12000 | 13500 | 15000 |
| | A | | kW | H (m) = Total head | | | | | | | | | | | | | | | | | |
| GKC8 250-163A-0210Z | 44,1 | 25,2 | 21 | | 19,7 | 16,9 | 16,6 | 16,4 | 16,2 | 15,9 | 15,4 | 14,9 | 14,4 | 13,9 | 13,4 | 12 | 10,6 | 9 | 7,1 | 5 | 2,5 |
| GKC8 250-163A-0210Z-R | 44,1 | 25,2 | 21 | | 19,7 | 16,9 | 16,6 | 16,4 | 16,2 | 15,9 | 15,4 | 14,9 | 14,4 | 13,9 | 13,4 | 12 | 10,6 | 9 | 7,1 | 5 | 2,5 |

GKC

calpeda®

## Performance

### n ≈ 950 1/min

| | | | | Q = Flow | | | | | | | | | | | | | | | | | |
|---|---|---|---|---|---|---|---|---|---|---|---|---|---|---|---|---|---|---|---|---|---|
| | | | | m³/h | 0 | 144 | 162 | 180 | 216 | 252 | 288 | 324 | 360 | 450 | 540 | 630 | 720 | 810 | 900 | 990 | 1080 |
| Model | 400V | 690V | P2 | l/min | | 2400 | 2700 | 3000 | 3600 | 4200 | 4800 | 5400 | 6000 | 7500 | 9000 | 10500 | 12000 | 13500 | 15000 | 16500 | 18000 |
| | A | | kW | H (m) = Total head | | | | | | | | | | | | | | | | | |
| GKC6 250-163L-0250R | 49 | 28,3 | 25 | | 23,8 | - | - | - | 17,9 | 17,3 | 16,7 | 16,1 | 15,6 | 14 | 12,4 | 10,7 | 8,9 | 7,1 | 5,1 | - | - |
| GKC6 250-163G-0340R | 64,6 | 37,3 | 34 | | 28,3 | - | - | - | 23,2 | 22,4 | 21,7 | 21 | 20,3 | 18,6 | 16,8 | 15 | 13,2 | 11,3 | 9,2 | 7,1 | - |
| GKC6 250-163D-0420R | 76,5 | 44,2 | 42 | | 32 | - | - | - | 25,5 | 24,8 | 24,2 | 23,5 | 22,9 | 21,3 | 19,7 | 17,9 | 15,9 | 13,7 | 11,3 | 8,8 | 6,2 |
| GKC6 250-163A-0510R | 91 | 52,5 | 51 | | 35,4 | - | - | - | 29 | 28,3 | 27,7 | 27 | 26,4 | 24,7 | 23 | 21,2 | 19,2 | 17,1 | 14,9 | 12,5 | 9,9 |
| GKC6 250-163L-0250R-R | 50,0 | 28,6 | 25 | | 23,8 | - | - | - | 17,5 | 16,7 | 16,1 | 15,5 | 14,9 | 13,3 | 11,7 | 9,9 | 8,1 | 6,3 | 4,5 | - | - |
| GKC6 250-163G-0340R-R | 68,5 | 39,1 | 34 | | 28,3 | 23,6 | 23,3 | 23 | 22,4 | 21,7 | 21 | 20,2 | 19,5 | 17,8 | 16 | 14,2 | 12,3 | 10,5 | 8,6 | 6,5 | 4 |
| GKC6 250-163D-0420R-R | 84,7 | 48,4 | 42 | | 32 | - | 26,6 | 26,3 | 25,6 | 25 | 24,3 | 23,6 | 22,9 | 21,2 | 19,4 | 17,5 | 15,6 | 13,6 | 11,6 | 9,6 | 7,3 |
| GKC6 250-163A-0510R-R | 103 | 58,9 | 51 | | 35,4 | 30,2 | 29,9 | 29,6 | 29 | 28,3 | 27,7 | 27 | 26,3 | 24,6 | 22,8 | 20,9 | 18,9 | 16,8 | 14,6 | 12,2 | 8,8 |

### n ≈ 1450 1/min

| | | | | Q = Flow | | | | | | | | | | | |
|---|---|---|---|---|---|---|---|---|---|---|---|---|---|---|---|
| | | | | m³/h | 0 | 324 | 360 | 450 | 540 | 630 | 720 | 810 | 900 | 990 | 1080 | 1188 |
| Model | 400V | 690V | P2 | l/min | | 5400 | 6000 | 7500 | 9000 | 10500 | 12000 | 13500 | 15000 | 16500 | 18000 | 19800 |
| | A | | kW | H (m) = Total head | | | | | | | | | | | | |
| GKC4 250-163M-0820R | 142 | 82 | 82 | | 45,8 | 36,2 | 35,3 | 33 | 30,8 | 28,5 | 26,2 | 24 | 21,7 | 19,6 | 17,5 | 15 |
| GKC4 250-163L-1000T | 184 | 105 | 100 | | 55,3 | 41,1 | 40 | 37,4 | 35 | 32,5 | 30,1 | 27,6 | 25,1 | 22,4 | 19,6 | 15,9 |
| GKC4 250-163H-1000T | 184 | 105 | 100 | | 59,3 | 43,3 | 42,3 | 39,8 | 37,2 | 34,6 | 32,1 | 29,5 | 26,8 | 24 | 21 | 17,5 |
| GKC4 250-163G-1200T | 223 | 128 | 120 | | 62,4 | 50,2 | 49,2 | 46,4 | 43,6 | 40,7 | 37,9 | 35 | 32,2 | 29,4 | 26,5 | 23,1 |
| GKC4 250-163E-1450T | 262 | 150 | 145 | | 65,9 | 56,8 | 55,4 | 52,1 | 49,3 | 46,8 | 44,3 | 41,7 | 39 | 36,3 | 33,4 | 30,1 |
| GKC4 250-163T-1450T | 262 | 150 | 145 | | 70,8 | 57 | 56 | 53,5 | 50,9 | 48,2 | 45,4 | 42,5 | 39,4 | 36,2 | 32,9 | 28,9 |
| GKC4 250-163B-1450T | 262 | 150 | 145 | | 74,1 | 61 | 59,8 | 57,1 | 54,4 | 51,6 | 48,8 | 45,9 | 42,9 | 39,8 | 36,6 | 32,5 |
| GKC4 250-163A-1800T | 321 | 184 | 180 | | 78,1 | 66,8 | 65,7 | 62,8 | 59,9 | 57,1 | 54,3 | 51,6 | 48,8 | 46 | 43 | 39,2 |
| GKC4 250-163M-0820R-R | 142 | 82 | 82 | | 45,8 | 36,2 | 35,3 | 33 | 30,8 | 28,5 | 26,2 | 24 | 21,7 | 19,6 | 17,5 | 15 |
| GKC4 250-163L-1000T-R | 184 | 105 | 100 | | 55,3 | 41,1 | 40 | 37,4 | 35 | 32,5 | 30,1 | 27,6 | 25,1 | 22,4 | 19,6 | 15,9 |
| GKC4 250-163H-1000T-R | 184 | 105 | 100 | | 59,3 | 43,3 | 42,3 | 39,8 | 37,2 | 34,6 | 32,1 | 29,5 | 26,8 | 24 | 21 | 17,5 |
| GKC4 250-163G-1200T-R | 223 | 128 | 120 | | 62,4 | 50,2 | 49,2 | 46,4 | 43,6 | 40,7 | 37,9 | 35 | 32,2 | 29,4 | 26,5 | 23,1 |
| GKC4 250-163E-1450T-R | 262 | 150 | 145 | | 65,9 | 56,8 | 55,4 | 52,1 | 49,3 | 46,8 | 44,3 | 41,7 | 39 | 36,3 | 33,4 | 30,1 |
| GKC4 250-163T-1450T-R | 262 | 150 | 145 | | 70,8 | 57 | 56 | 53,5 | 50,9 | 48,2 | 45,4 | 42,5 | 39,4 | 36,2 | 32,9 | 28,9 |
| GKC4 250-163B-1450T-R | 262 | 150 | 145 | | 74,1 | 61 | 59,8 | 57,1 | 54,4 | 51,6 | 48,8 | 45,9 | 42,9 | 39,8 | 36,6 | 32,5 |
| GKC4 250-163A-1800T-R | 321 | 184 | 180 | | 78,1 | 66,8 | 65,7 | 62,8 | 59,9 | 57,1 | 54,3 | 51,6 | 48,8 | 46 | 43 | 39,2 |

# GKC

## Characteristic curves

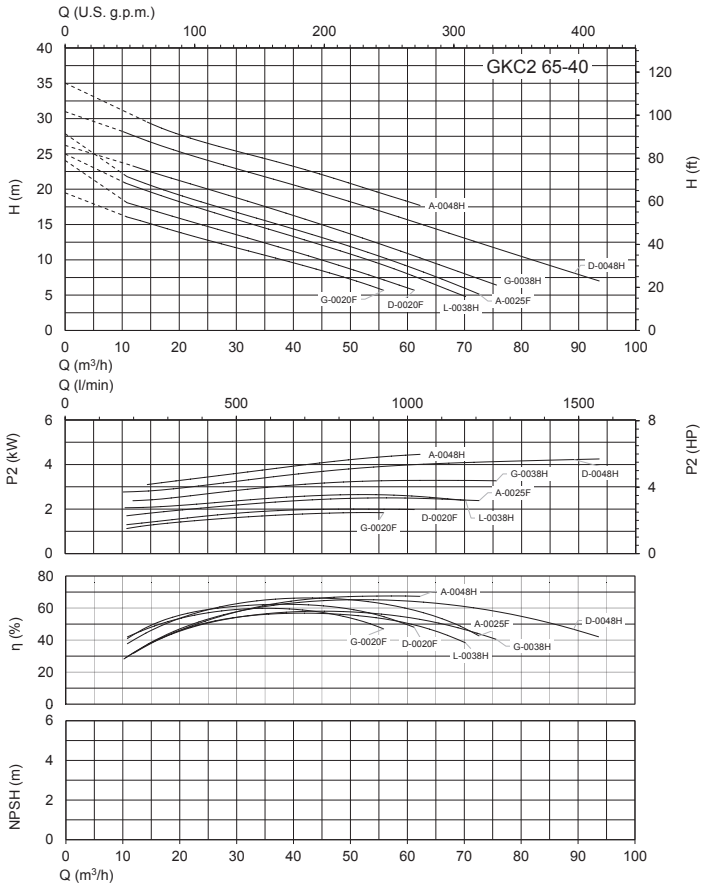


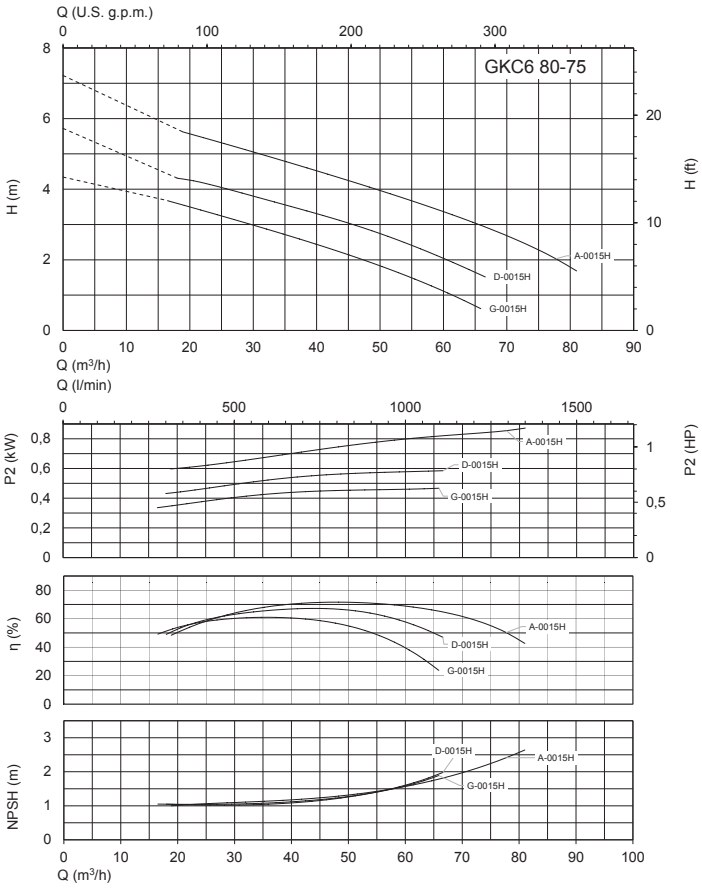


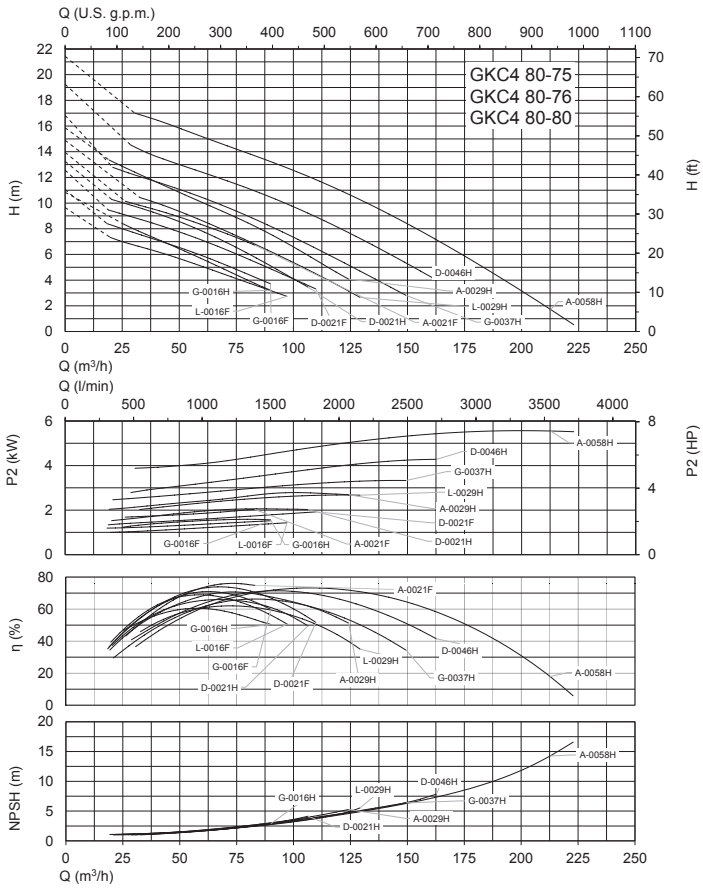


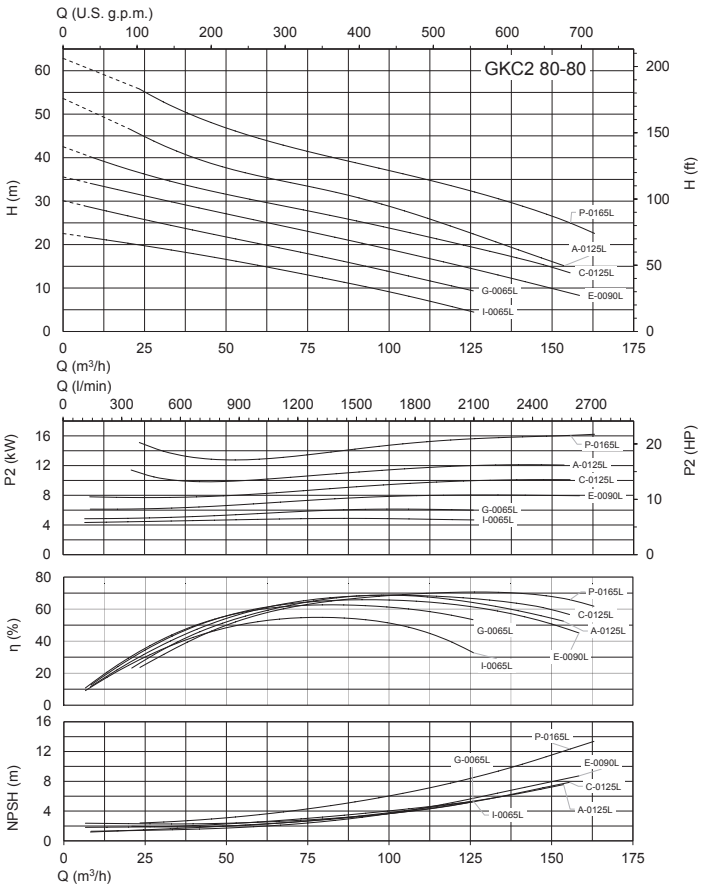

# GKC

## Characteristic curves

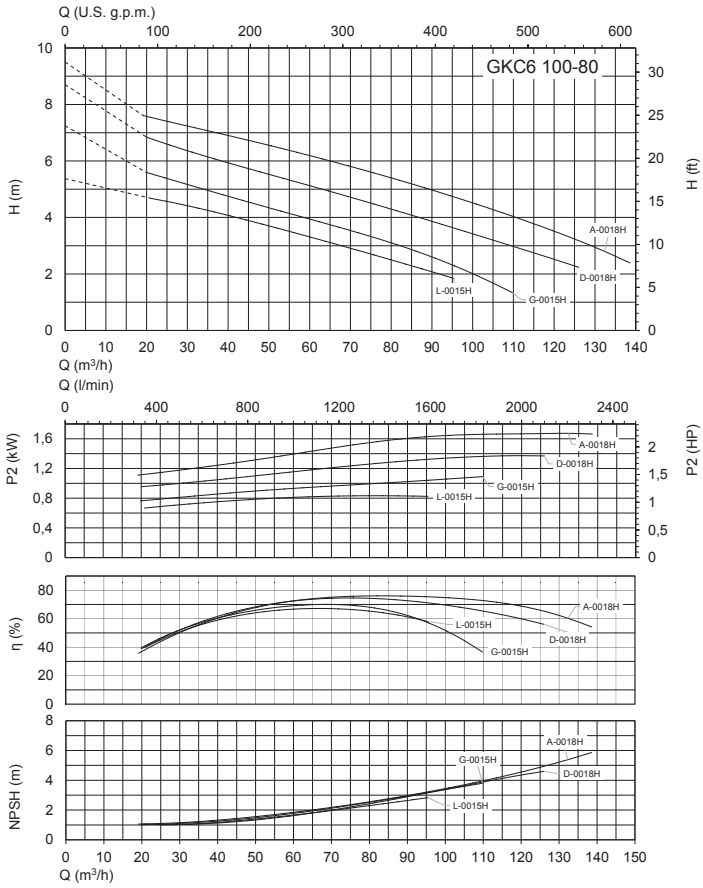


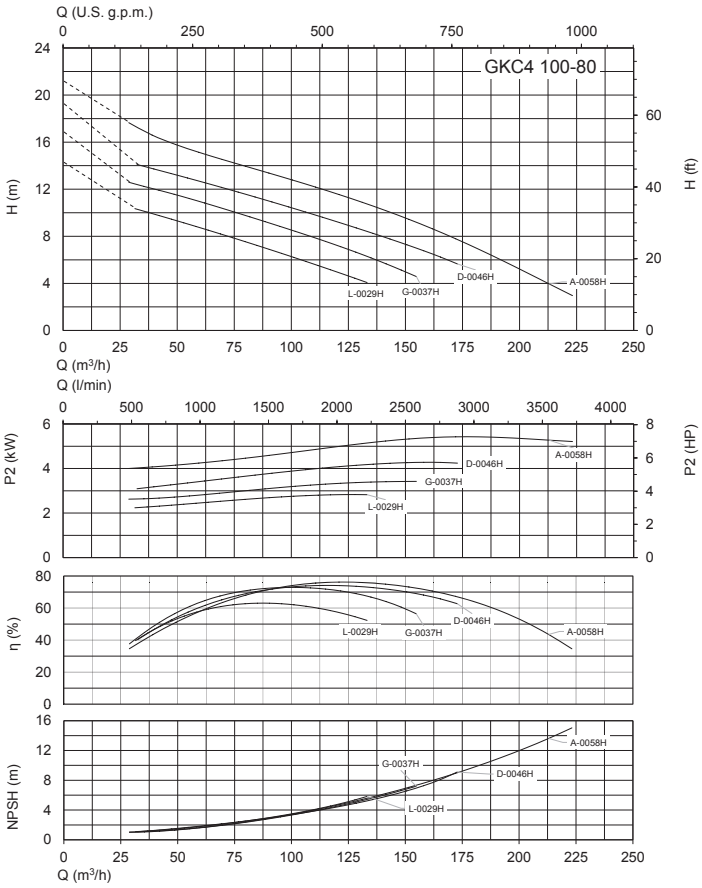


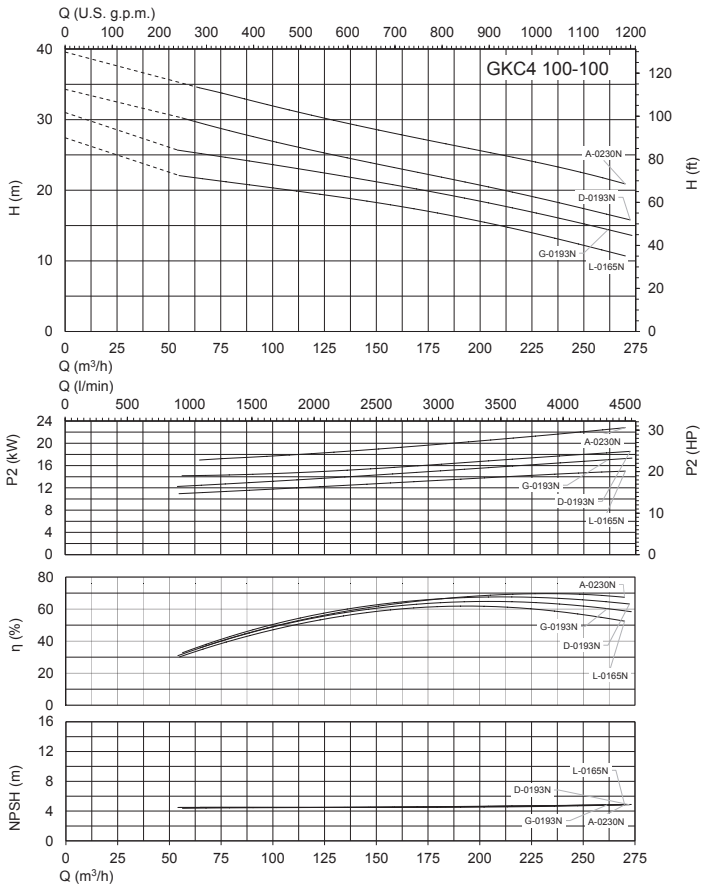


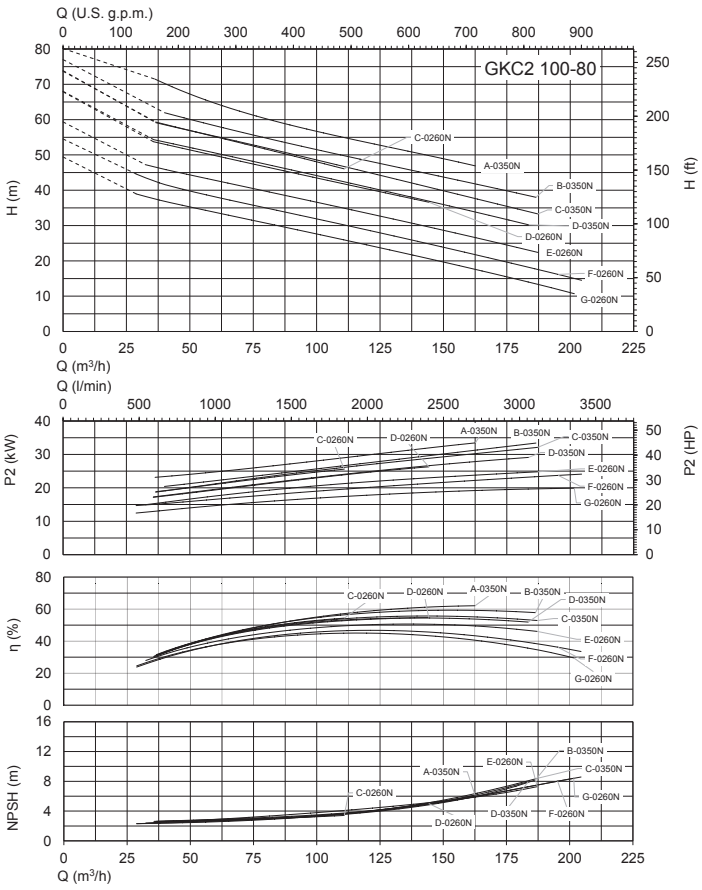

# GKC

## Characteristic curves

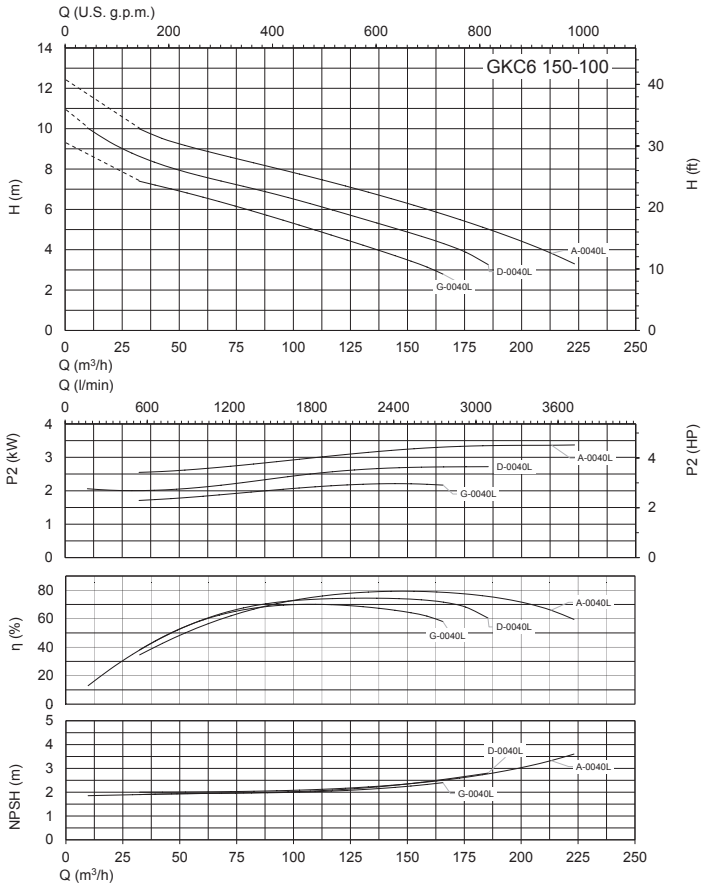


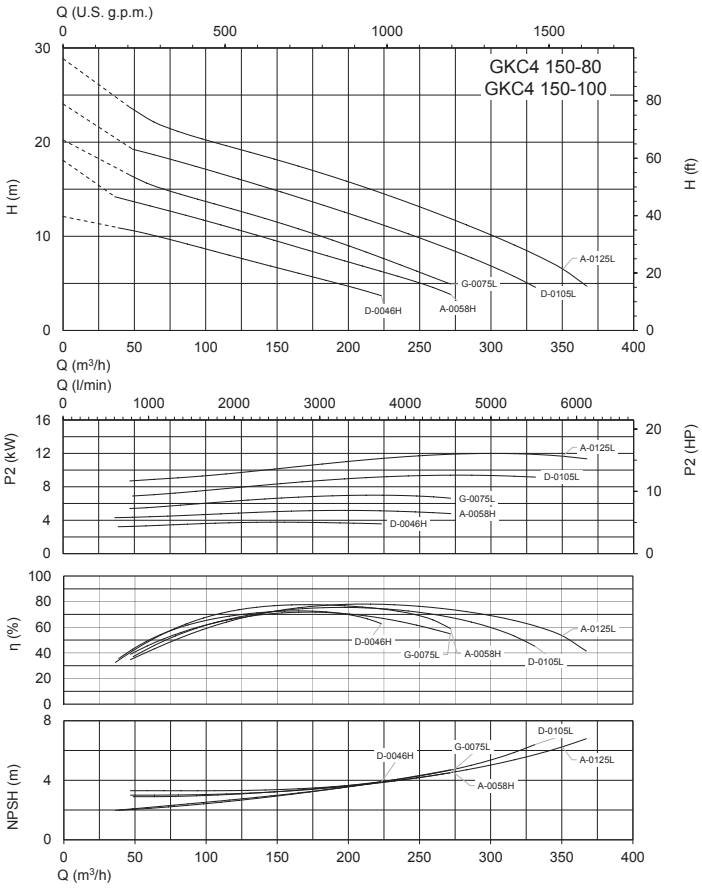


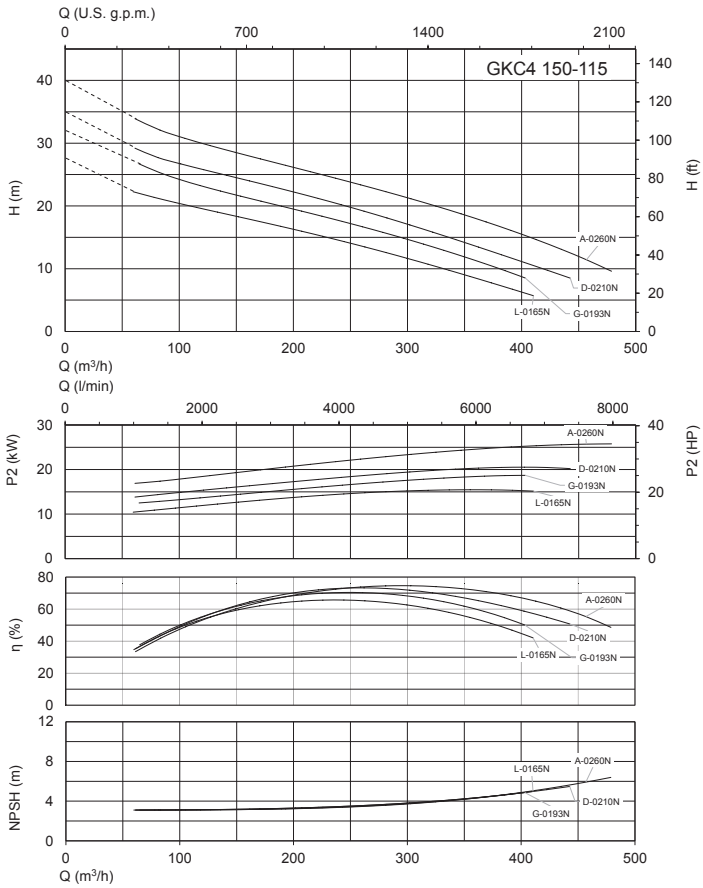


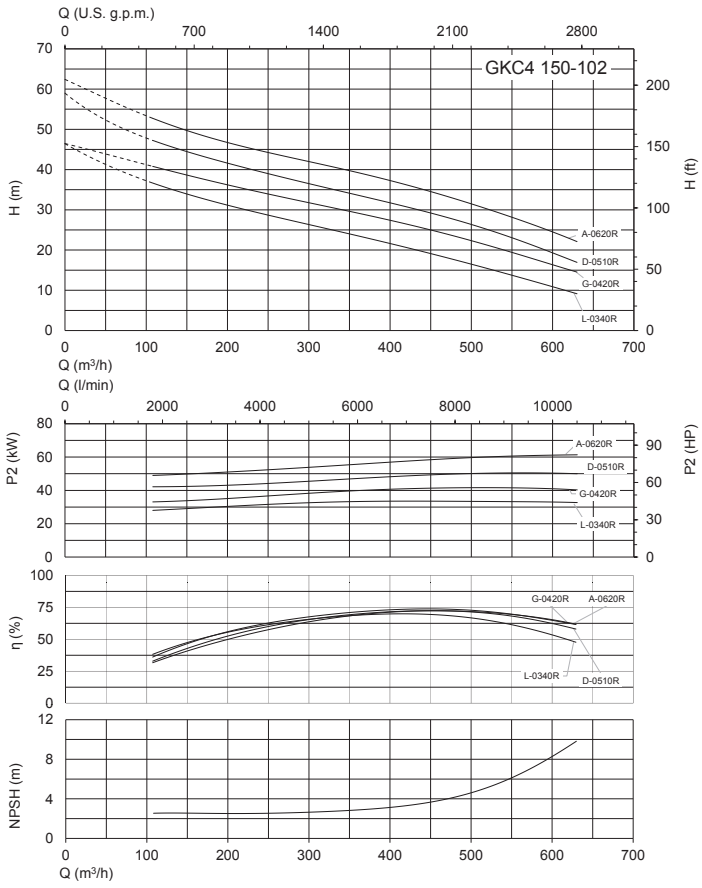

# GKC

## Characteristic curves

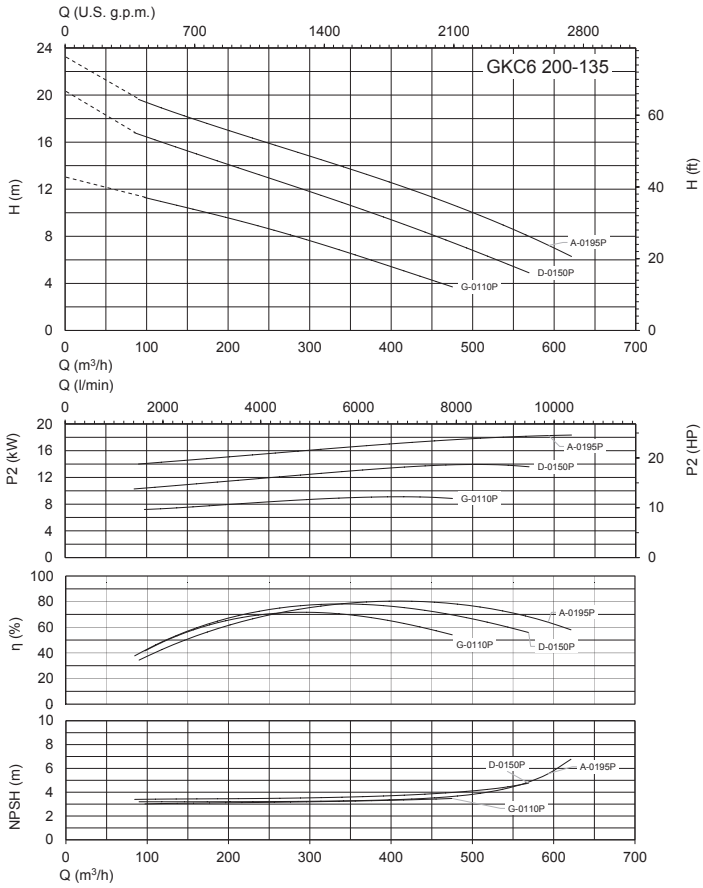


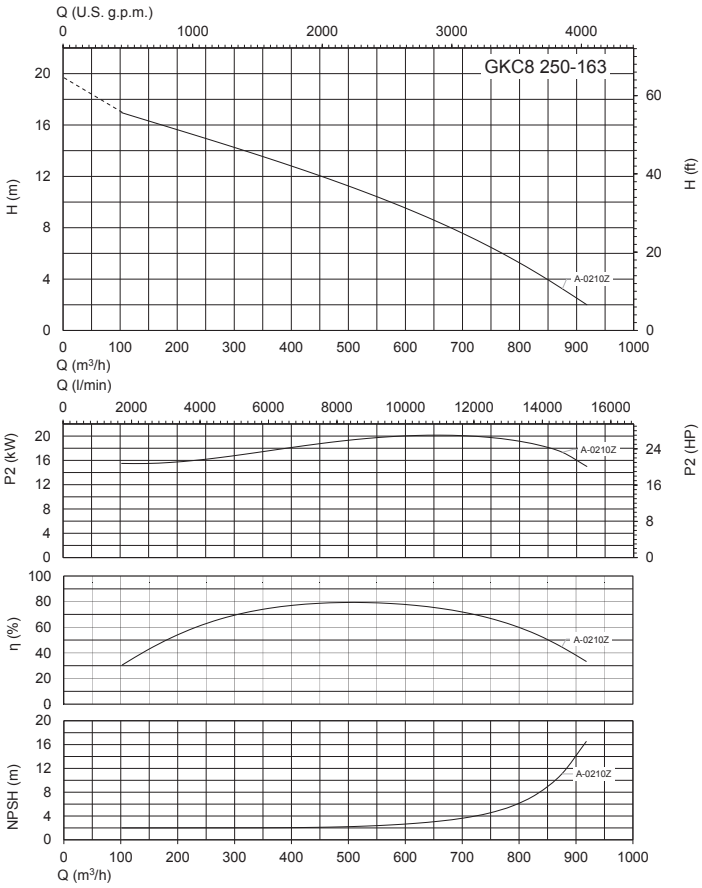


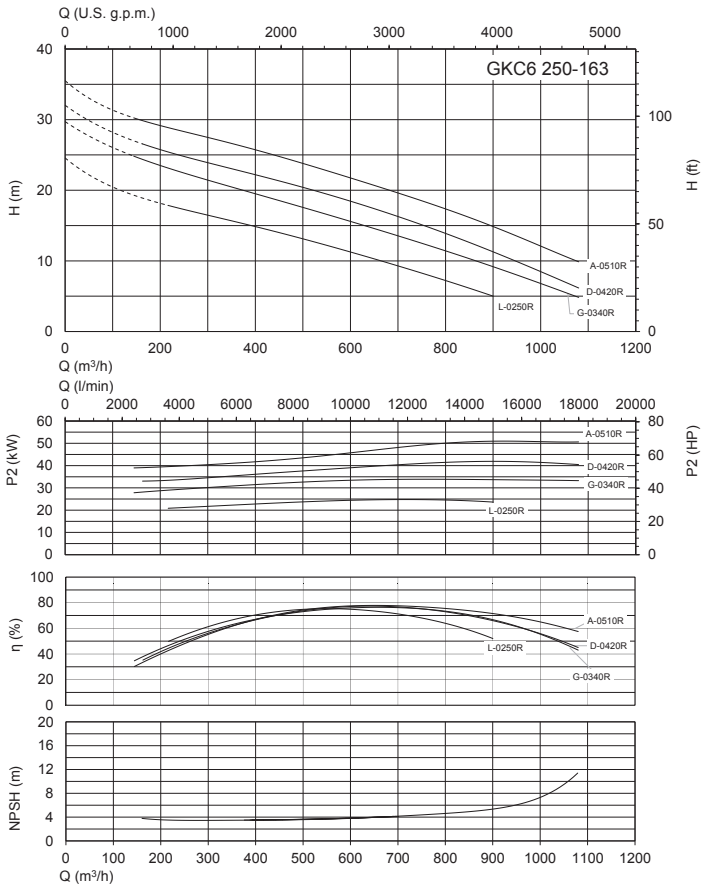


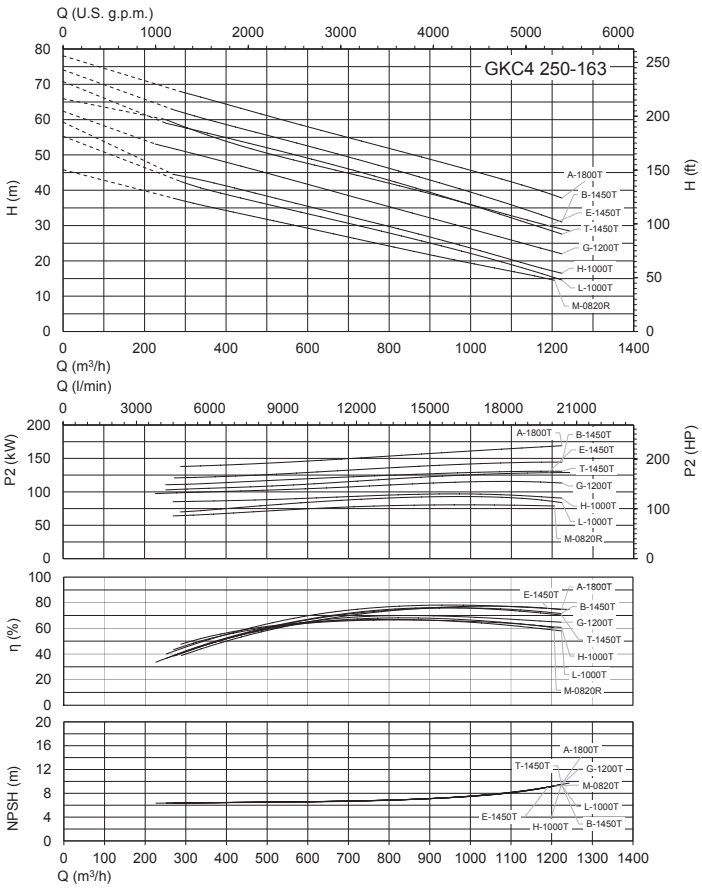

# GKC

## Dimensions and weight

**Duck foot coupling**

**SAK**

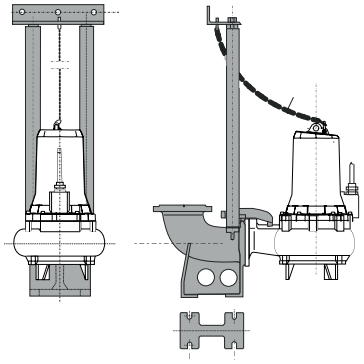

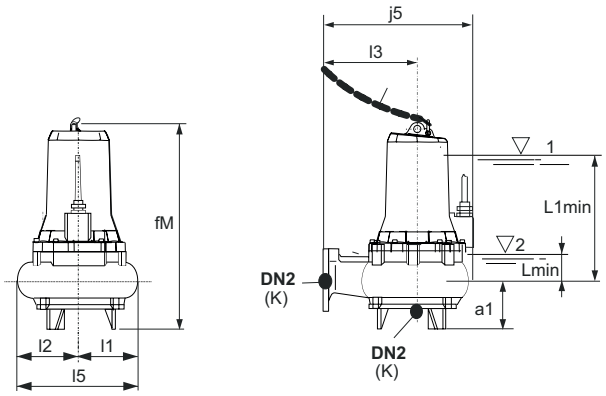


| TYPE | | mm | | | | | | | | | | Kg |
|---|---|---|---|---|---|---|---|---|---|---|---|---|
| | DN2 | a1 | fM | j5 | K | l1 | l2 | l3 | l5 | L1min | Lmin | Weight |
| **GKC2 65-40G-0020F** | 65 | 140 | 561.6 | 373 | 16 | 148 | 148 | 225 | 296 | 255 | 90 | 61 |
| **GKC2 65-40D-0020F** | 65 | 140 | 561.6 | 373 | 16 | 148 | 148 | 225 | 296 | 255 | 90 | 60 |
| **GKC2 65-40A-0025F** | 65 | 140 | 561.6 | 373 | 16 | 148 | 148 | 225 | 296 | 255 | 90 | 58 |

L1min = Minimum submergence depth for motor without casing with continuous duty S1 (NPSHR permitting)
Lmin = Minimum submergence depth for motor without casing with intermittent duty S3 (NPSHR permitting)

# GKC

## Dimensions and weight

**Duck foot coupling**

**SAK**

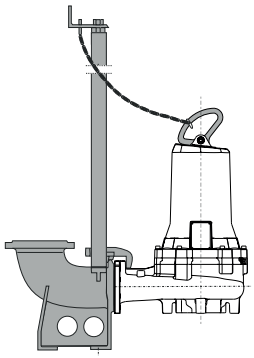

**Submersible pump rest**

**APK**

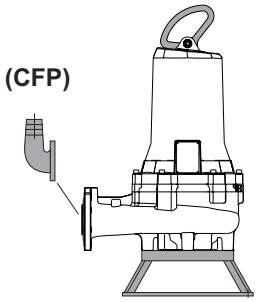


**Dry chamber pump rest**

**APCK**

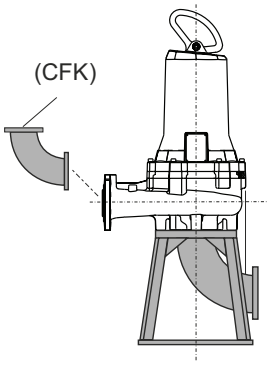


**Dry chamber pump support**

**SOK**

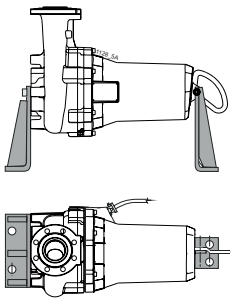

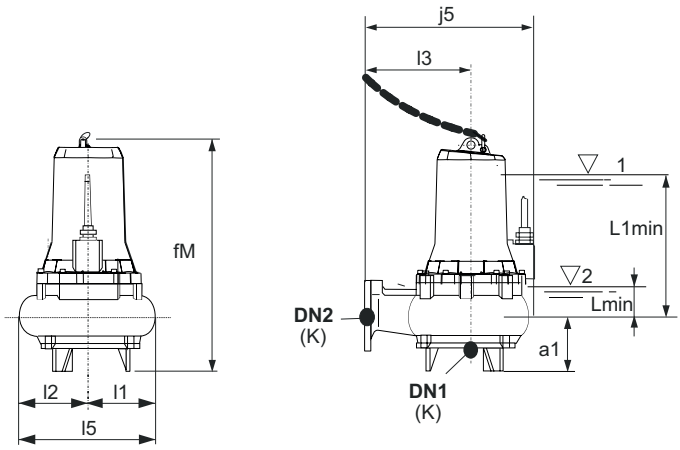


| TYPE | | | mm | | | | | | | | | | Kg |
|---|---|---|---|---|---|---|---|---|---|---|---|---|---|
| | DN1 | DN2 | a1 | fM | j5 | K | l1 | l2 | l3 | l5 | L1min | Lmin | Weight |
| **GKC2 65-40A-0048H** | 65 | 65 | 80.5 | 601.7 | 390 | 16 | 204.5 | 145 | 245 | 349.5 | 323.9 | 71.9 | 98 |
| **GKC2 65-40D-0048H** | 65 | 65 | 80.5 | 601.7 | 390 | 16 | 204.5 | 145 | 245 | 349.5 | 323.9 | 71.9 | - |
| **GKC2 65-40G-0038H** | 65 | 65 | 80.5 | 601.7 | 390 | 16 | 204.5 | 145 | 245 | 349.5 | 323.9 | 71.9 | - |
| **GKC2 65-40L-0038H** | 65 | 65 | 80.5 | 601.7 | 390 | 16 | 204.5 | 145 | 245 | 349.5 | 323.9 | 71.9 | - |

L1min = Minimum submergence depth for motor without casing with continuous duty S1 (NPSHR permitting)
Lmin = Minimum submergence depth for motor without casing with intermittent duty S3 (NPSHR permitting)

# GKC

## Dimensions and weight

**Duck foot coupling**

**SAK**

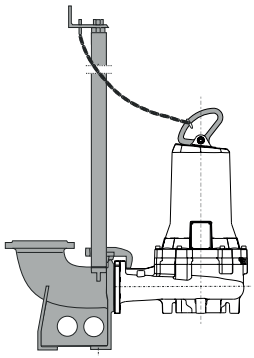

**Submersible pump rest**

**APK**

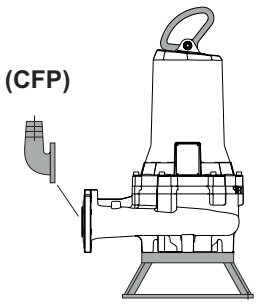


**Dry chamber pump rest**

**APCK**

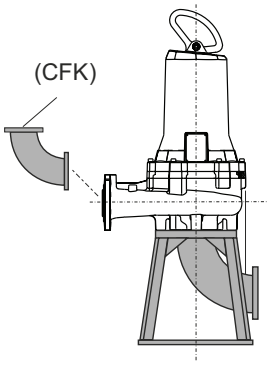


**Dry chamber pump support**

**SOK**

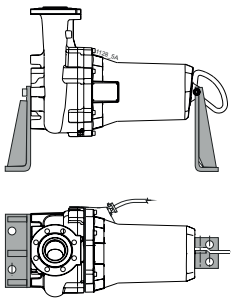

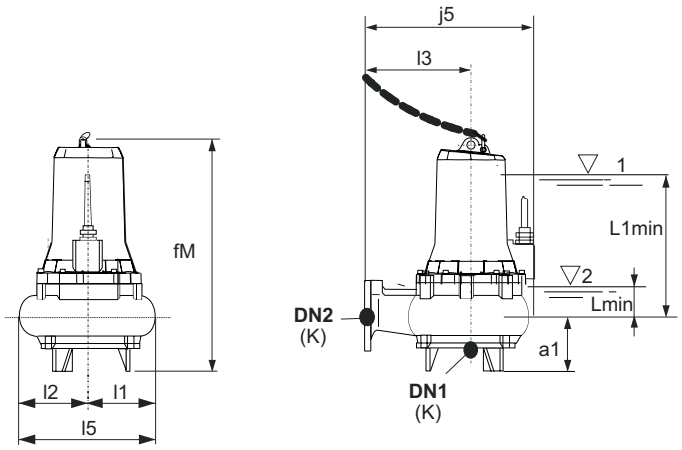


| TYPE | | | mm | | | | | | | | | | Kg |
|---|---|---|---|---|---|---|---|---|---|---|---|---|---|
| | DN1 | DN2 | a1 | fM | j5 | K | l1 | l2 | l3 | l5 | L1min | Lmin | Weight |
| GKC6 80-75G-0015H | 80 | 80 | 121 | 647.3 | 407 | 16 | 204.5 | 176 | 245 | 380.5 | 297 | 75 | 87.2 |
| GKC6 80-75D-0015H | 80 | 80 | 121 | 647.3 | 407 | 16 | 204.5 | 176 | 245 | 380.5 | 297 | 75 | 87.1 |
| GKC6 80-75A-0015H | 80 | 80 | 121 | 647.3 | 407 | 16 | 204.5 | 176 | 245 | 380.5 | 297 | 75 | 84.9 |
| GKC4 80-75G-0016H | 80 | 80 | 121 | 647.3 | 407 | 16 | 204.5 | 176 | 245 | 380.5 | 297 | 75 | 91.3 |
| GKC4 80-75D-0021H | 80 | 80 | 118 | 650.3 | 435 | 16 | 204.5 | 176 | 255 | 380.5 | 370 | 80 | 95.6 |
| GKC4 80-75A-0029H | 80 | 80 | 121 | 647.3 | 407 | 16 | 204.5 | 176 | 245 | 380.5 | 297 | 75 | 93 |
| GKC4 80-80G-0037H | 100 | 80 | 120.5 | 716.4 | 407 | 16 | 221 | 176 | 245 | 397 | 370 | 80 | 117 |
| GKC4 80-80L-0029H | 100 | 80 | 120.5 | 647.3 | 407 | 16 | 204.5 | 176 | 245 | 380.5 | 322 | 80 | 95 |
| GKC4 80-80D-0046H | 100 | 80 | 120.5 | 716.4 | 407 | 16 | 221 | 176 | 245 | 397 | 370 | 80 | 108 |
| GKC4 80-80A-0058H | 100 | 80 | 120.5 | 716.4 | 407 | 16 | 221 | 176 | 245 | 397 | 370 | 80 | 120 |
| GKC2 80-80P-0165L | 80 | 80 | 95 | 765.4 | 498 | 16 | 236.5 | 180 | 325 | 416.5 | 438 | 87 | 172.2 |
| GKC2 80-80I-0065L | 80 | 80 | 95 | 763 | 498 | 16 | 225.5 | 180 | 325 | 405.5 | 438 | 87 | 134 |
| GKC2 80-80G-0065L | 80 | 80 | 95 | 763 | 498 | 16 | 225.5 | 180 | 325 | 405.5 | 438 | 87 | 137 |
| GKC2 80-80E-0090L | 80 | 80 | 95 | 763 | 498 | 16 | 225.5 | 180 | 325 | 405.5 | 438 | 87 | 142.5 |
| GKC2 80-80C-0125L | 80 | 80 | 95 | 763 | 498 | 16 | 225.5 | 180 | 325 | 405.5 | 438 | 87 | 148.1 |
| GKC2 80-80A-0125L | 80 | 80 | 95 | 763 | 498 | 16 | 225.5 | 180 | 325 | 405.5 | 438 | 87 | 148 |

L1min = Minimum submergence depth for motor without casing with continuous duty S1 (NPSHR permitting)
Lmin = Minimum submergence depth for motor without casing with intermittent duty S3 (NPSHR permitting)

## Dimensions and weight

**Duck foot coupling**

**SAK**

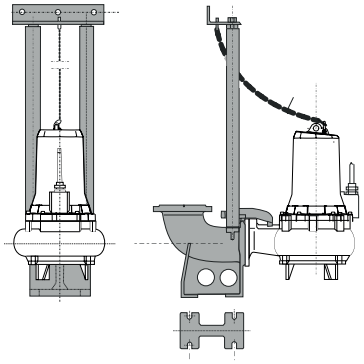

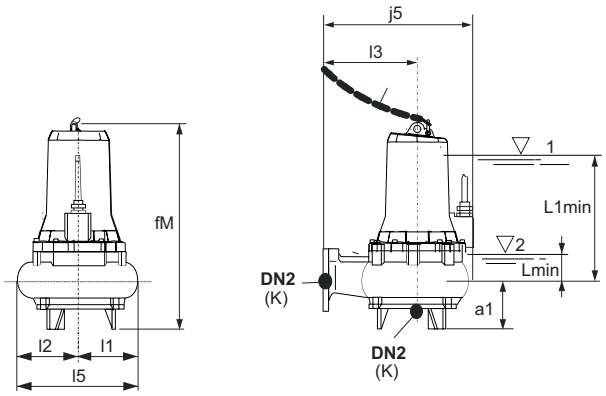


| TYPE | | mm | | | | | | | | | |
|---|---|---|---|---|---|---|---|---|---|---|---|
| | DN2 | a1 | fM | j5 | K | l1 | l2 | l3 | l5 | L1min | Lmin |
| **GKC4 80-76A-0021F** | 80 | 180 | 622.6 | 393 | 16 | 144 | 173 | 235 | 317 | 272 | 107 |
| **GKC4 80-76D-0021F** | 80 | 180 | 622.6 | 393 | 16 | 144 | 173 | 235 | 317 | 272 | 107 |
| **GKC4 80-76G-0016F** | 80 | 180 | 622.6 | 393 | 16 | 144 | 173 | 235 | 317 | 272 | 107 |
| **GKC4 80-76L-0016F** | 80 | 180 | 622.6 | 393 | 16 | 144 | 173 | 235 | 317 | 272 | 107 |

L1min = Minimum submergence depth for motor without casing with continuous duty S1 (NPSHR permitting)
Lmin = Minimum submergence depth for motor without casing with intermittent duty S3 (NPSHR permitting)

# GKC

## Dimensions and weight

**Duck foot coupling**

**SAK**

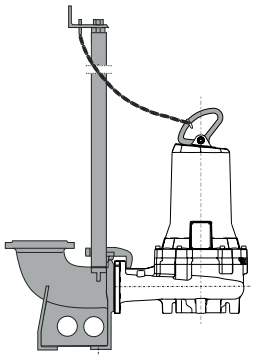

**Submersible pump rest**

**APK**

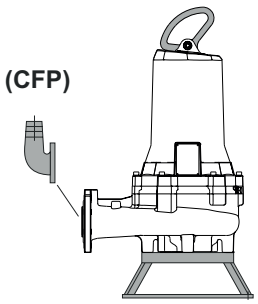


**Dry chamber pump rest**

**APCK**

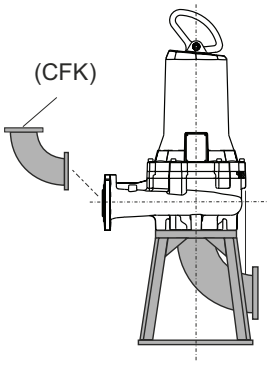


**Dry chamber pump support**

**SOK**

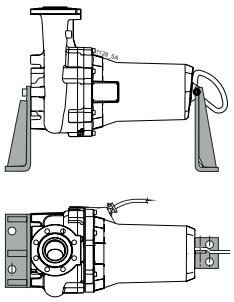

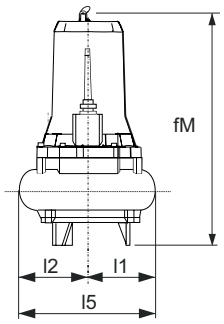


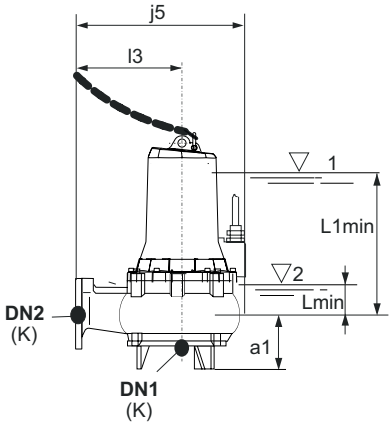


| TYPE | | | mm | | | | | | | | | | Kg |
|---|---|---|---|---|---|---|---|---|---|---|---|---|---|
| | DN1 | DN2 | a1 | fM | j5 | K | l1 | l2 | l3 | l5 | L1min | Lmin | Weight |
| GKC6 100-80L-0015H | 100 | 100 | 118 | 650.3 | 435 | 16 | 204.5 | 198 | 255 | 402.5 | 302 | 82 | 94.7 |
| GKC6 100-80G-0015H | 100 | 100 | 118 | 650.3 | 435 | 16 | 204.5 | 198 | 255 | 402.5 | 302 | 82 | 94.7 |
| GKC6 100-80D-0018H | 100 | 100 | 118 | 719.4 | 435 | 16 | 221 | 198 | 255 | 419 | 337 | 82 | 116 |
| GKC6 100-80A-0018H | 100 | 100 | 118 | 719.4 | 435 | 16 | 221 | 198 | 255 | 419 | 337 | 82 | 116 |
| GKC4 100-80L-0029H | 100 | 100 | 118 | 650.3 | 435 | 16 | 204.5 | 198 | 255 | 402.5 | 302 | 82 | 103.2 |
| GKC4 100-80G-0037H | 100 | 100 | 118 | 719.4 | 435 | 16 | 221 | 198 | 255 | 419 | 337 | 82 | 118 |
| GKC4 100-80D-0046H | 100 | 100 | 118 | 719.4 | 435 | 16 | 221 | 198 | 255 | 419 | 337 | 82 | 113 |
| GKC4 100-80A-0058H | 100 | 100 | 118 | 719.4 | 435 | 16 | 221 | 198 | 255 | 419 | 337 | 82 | 126.6 |

L1min = Minimum submergence depth for motor without casing with continuous duty S1 (NPSHR permitting)
Lmin = Minimum submergence depth for motor without casing with intermittent duty S3 (NPSHR permitting)

# GKC

## Dimensions and weight

**Duck foot coupling**

**SAK**

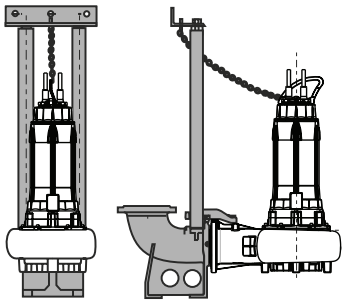

**Submersible pump rest**

**APK**

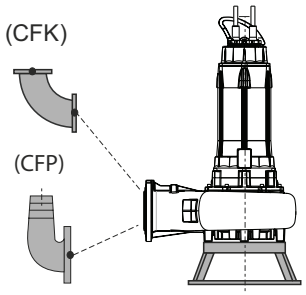


**Dry chamber pump rest**

**APCK**

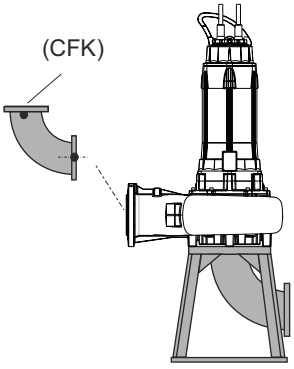


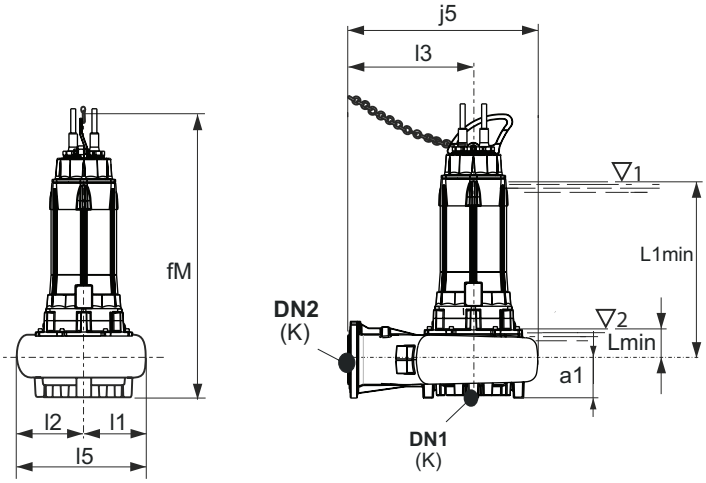


| TYPE | | | mm | | | | | | | | | | Kg |
|---|---|---|---|---|---|---|---|---|---|---|---|---|---|
| | DN1 | DN2 | a1 | fM | j5 | K | l1 | l2 | l3 | l5 | L1min | Lmin | Weight |
| GKC4 100-100L-0165N | 150 | 100 | 160 | 1240 | 551 | 16 | 224 | 262 | 308 | 486 | 795 | 174 | 340 |
| GKC4 100-100G-0193N | 150 | 100 | 160 | 1240 | 551 | 16 | 224 | 262 | 308 | 486 | 795 | 174 | 371.9 |
| GKC4 100-100D-0193N | 150 | 100 | 160 | 1240 | 551 | 16 | 224 | 262 | 308 | 486 | 795 | 174 | 372.8 |
| GKC4 100-100A-0230N | 150 | 100 | 160 | 1240 | 551 | 16 | 224 | 262 | 308 | 486 | 795 | 174 | 380.7 |
| GKC2 100-80C-0260N | 100 | 100 | 110 | 1183 | 553 | 16 | 200 | 200 | 335 | 400 | 788 | 167 | 343.9 |
| GKC2 100-80D-0260N | 100 | 100 | 110 | 1183 | 553 | 16 | 200 | 200 | 335 | 400 | 788 | 167 | 343.7 |
| GKC2 100-80G-0260N | 100 | 100 | 110 | 1183 | 553 | 16 | 200 | 200 | 335 | 400 | 788 | 167 | 342.3 |
| GKC2 100-80F-0260N | 100 | 100 | 110 | 1183 | 553 | 16 | 200 | 200 | 335 | 400 | 788 | 167 | 342.4 |
| GKC2 100-80E-0260N | 100 | 100 | 110 | 1183 | 553 | 16 | 200 | 200 | 335 | 400 | 788 | 167 | 342.9 |
| GKC2 100-80C-0350N | 100 | 100 | 110 | 1183 | 553 | 16 | 200 | 200 | 335 | 400 | 788 | 167 | 367.1 |
| GKC2 100-80D-0350N | 100 | 100 | 110 | 1183 | 553 | 16 | 200 | 200 | 335 | 400 | 788 | 167 | 366.9 |
| GKC2 100-80B-0350N | 100 | 100 | 110 | 1183 | 553 | 16 | 200 | 200 | 335 | 400 | 788 | 167 | 367.4 |
| GKC2 100-80A-0350N | 100 | 100 | 110 | 1183 | 553 | 16 | 200 | 200 | 335 | 400 | 788 | 167 | 368.1 |

L1min = Minimum submergence depth for motor without casing with continuous duty S1 (NPSHR permitting)
Lmin = Minimum submergence depth for motor without casing with intermittent duty S3 (NPSHR permitting)

# GKC

## Dimensions and weight

**Duck foot coupling**

**SAK**

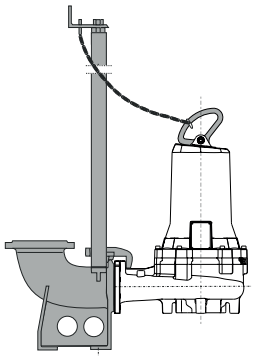

**Submersible pump rest**

**APK**

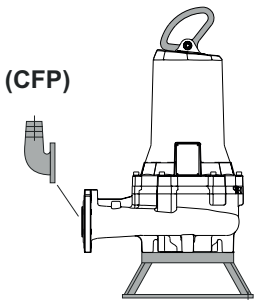


**Dry chamber pump rest**

**APCK**

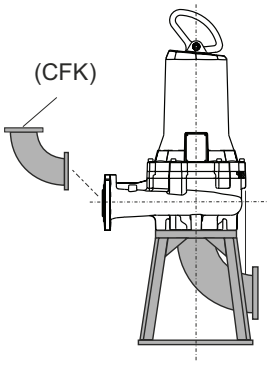


**Dry chamber pump support**

**SOK**

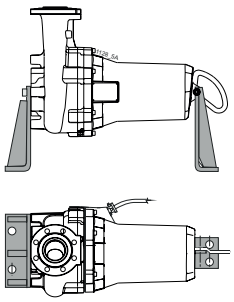

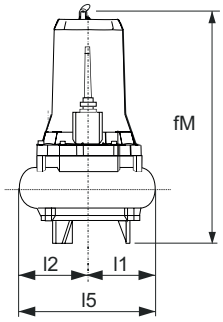


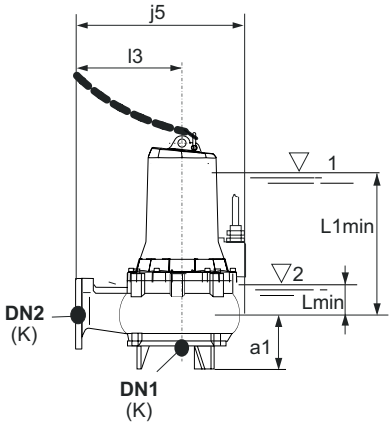


| TYPE | | | mm | | | | | | | | | | Kg |
|---|---|---|---|---|---|---|---|---|---|---|---|---|---|
| | DN1 | DN2 | a1 | fM | j5 | K | l1 | l2 | l3 | l5 | L1min | Lmin | Weight |
| GKC6 150-100G-0040L | 150 | 150 | 138 | 808 | 532 | 16 | 227 | 241 | 305 | 468 | 440 | 89 | 168.5 |
| GKC6 150-100D-0040L | 150 | 150 | 138 | 808 | 532 | 16 | 227 | 241 | 305 | 468 | 440 | 89 | 168 |
| GKC6 150-100A-0040L | 150 | 150 | 138 | 808 | 532 | 16 | 227 | 241 | 305 | 468 | 440 | 89 | 167.8 |
| GKC4 150-80D-0046H | 150 | 150 | 138 | 752.9 | 567 | 16 | 227 | 238.5 | 340 | 465.5 | 350 | 95 | 153 |
| GKC4 150-80A-0058H | 150 | 150 | 138 | 752.9 | 567 | 16 | 227 | 238.5 | 340 | 465.5 | 350 | 95 | 164.4 |
| GKC4 150-100G-0075L | 150 | 150 | 138 | 808 | 532 | 16 | 227 | 241 | 305 | 468 | 440 | 89 | 177 |
| GKC4 150-100D-0105L | 150 | 150 | 138 | 810.4 | 532 | 16 | 236 | 241 | 305 | 477 | 440 | 89 | 199.7 |
| GKC4 150-100A-0125L | 150 | 150 | 138 | 810.4 | 532 | 16 | 236.5 | 241 | 305 | 477.5 | 440 | 89 | 199.5 |

L1min = Minimum submergence depth for motor without casing with continuous duty S1 (NPSHR permitting)
Lmin = Minimum submergence depth for motor without casing with intermittent duty S3 (NPSHR permitting)

# GKC

## Dimensions and weight

**Duck foot coupling**

**SAK**

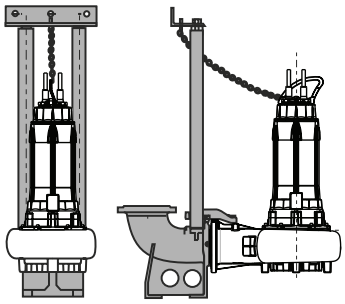

**Submersible pump rest**

**APK**

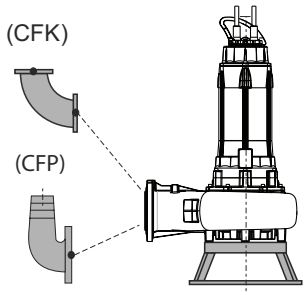


**Dry chamber pump rest**

**APCK**

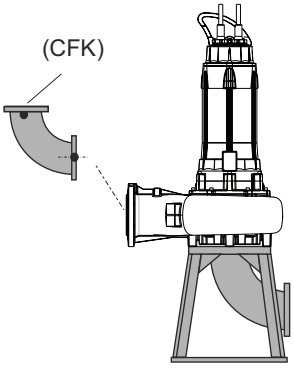


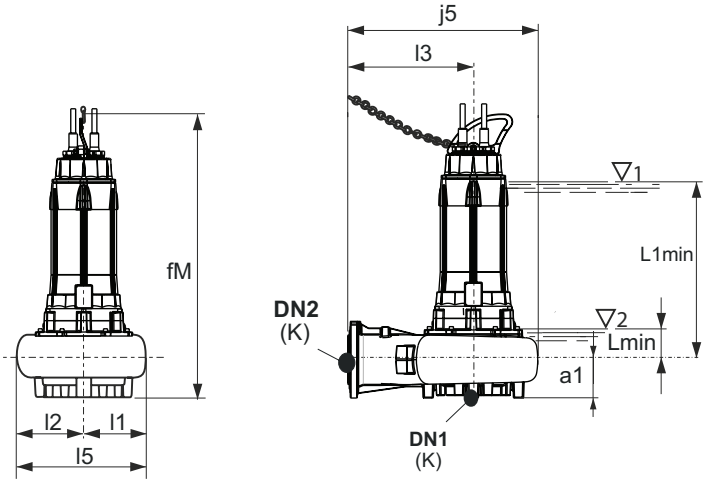


| TYPE | | | mm | | | | | | | | | | Kg |
|---|---|---|---|---|---|---|---|---|---|---|---|---|---|
| | DN1 | DN2 | a1 | fM | j5 | K | l1 | l2 | l3 | l5 | L1min | Lmin | Weight |
| **GKC4 150-115L-0165N** | 150 | 150 | 160 | 1240 | 658 | 16 | 229 | 278 | 405 | 507 | 795 | 174 | 358 |
| **GKC4 150-115G-0193N** | 150 | 150 | 160 | 1240 | 658 | 16 | 229 | 278 | 405 | 507 | 795 | 174 | 379.9 |
| **GKC4 150-115D-0210N** | 150 | 150 | 160 | 1240 | 658 | 16 | 229 | 278 | 405 | 507 | 795 | 174 | 380 |
| **GKC4 150-115A-0260N** | 150 | 150 | 160 | 1240 | 658 | 16 | 229 | 278 | 405 | 507 | 795 | 174 | 388.7 |

L1min = Minimum submergence depth for motor without casing with continuous duty S1 (NPSHR permitting)
Lmin = Minimum submergence depth for motor without casing with intermittent duty S3 (NPSHR permitting)

# GKC

## Dimensions and weight

**Duck foot coupling**

**SAK**

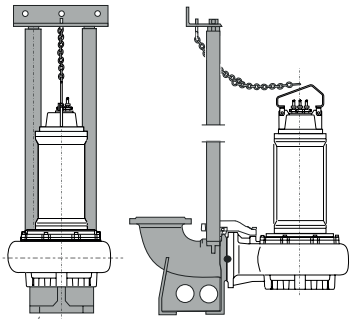

**Submersible pump rest**

**APK**

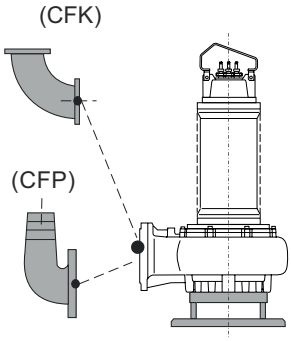


**Dry chamber pump rest**

**APCK**

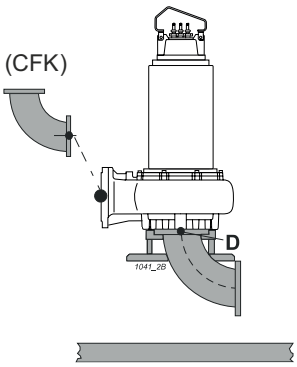


**Dry chamber pump support**

**SOK**

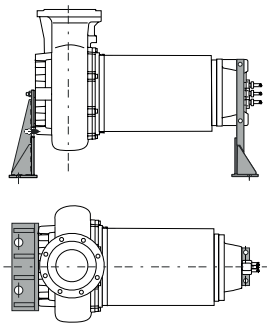

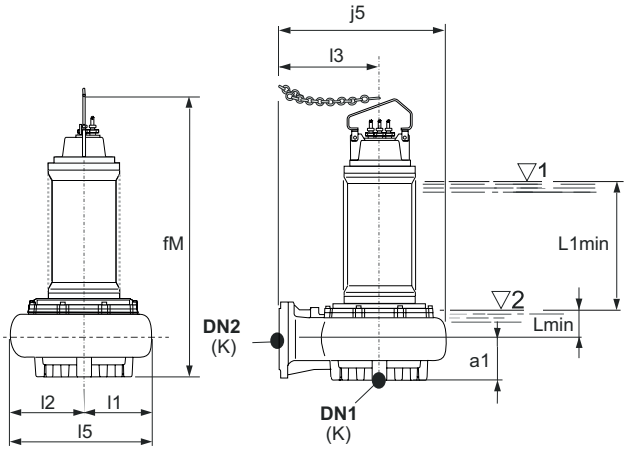


| TYPE | | | mm | | | | | | | | | | Kg |
|---|---|---|---|---|---|---|---|---|---|---|---|---|---|
| | DN1 | DN2 | a1 | fM | j5 | K | l1 | l2 | l3 | l5 | L1min | Lmin | Weight |
| **GKC4 150-102L-0340R** | 150 | 150 | 195 | 1569 | 825 | 16 | 305 | 365 | 500 | 670 | 948 | 182 | 567 |
| **GKC4 150-102G-0420R** | 150 | 150 | 195 | 1569 | 825 | 16 | 305 | 365 | 500 | 670 | 948 | 182 | 677 |
| **GKC4 150-102D-0510R** | 150 | 150 | 195 | 1569 | 825 | 16 | 305 | 365 | 500 | 670 | 948 | 182 | 607 |
| **GKC4 150-102A-0620R** | 150 | 150 | 195 | 1623 | 825 | 16 | 305 | 365 | 500 | 670 | 1002 | 182 | 812 |
| **GKC4 150-102L-0340R-R** | 150 | 150 | 195 | 1569 | 825 | 16 | 305 | 365 | 500 | 670 | 948 | 182 | 582 |
| **GKC4 150-102G-0420R-R** | 150 | 150 | 195 | 1569 | 825 | 16 | 305 | 365 | 500 | 670 | 948 | 182 | 692 |
| **GKC4 150-102D-0510R-R** | 150 | 150 | 195 | 1569 | 825 | 16 | 305 | 365 | 500 | 670 | 948 | 182 | 622 |
| **GKC4 150-102A-0620R-R** | 150 | 150 | 195 | 1623 | 825 | 16 | 305 | 365 | 500 | 670 | 1002 | 182 | 832 |

L1min = Minimum submergence depth for motor without casing with continuous duty S1 (NPSHR permitting)
Lmin = Minimum submergence depth for motor without casing with intermittent duty S3 (NPSHR permitting)

# GKC

## Dimensions and weight

**Duck foot coupling**

**SAK**

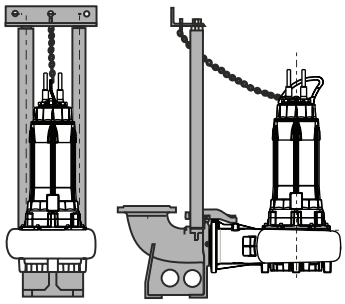

**Submersible pump rest**

**APK**

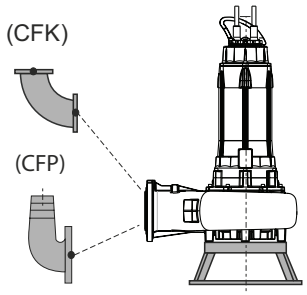


**Dry chamber pump rest**

**APCK**

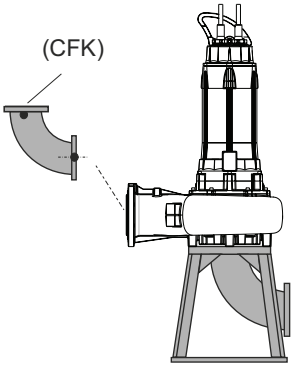


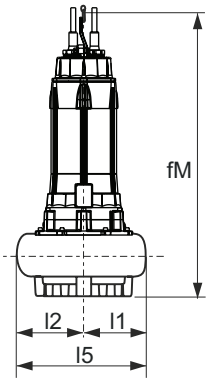


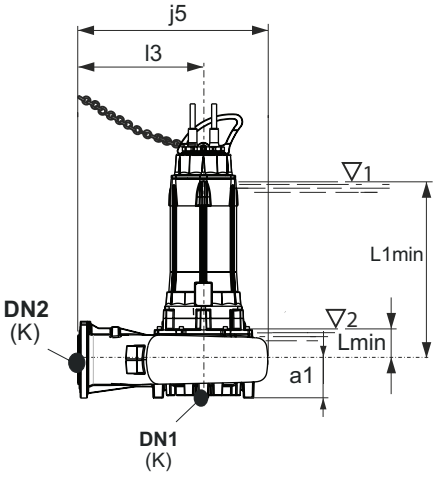


| TYPE | | | mm | | | | | | | | | | Kg |
|---|---|---|---|---|---|---|---|---|---|---|---|---|---|
| | DN1 | DN2 | a1 | fM | j5 | K | l1 | l2 | l3 | l5 | L1min | Lmin | Weight |
| **GKC6 200-135G-0110P** | 200 | 200 | 185 | 1280 | 765 | 10 | 277 | 345 | 455 | 622 | 810 | 189 | 423.3 |
| **GKC6 200-135D-0150P** | 200 | 200 | 185 | 1280 | 765 | 10 | 277 | 345 | 455 | 622 | 810 | 189 | 450.2 |
| **GKC6 200-135A-0195P** | 200 | 200 | 185 | 1280 | 765 | 10 | 277 | 345 | 455 | 622 | 810 | 189 | 497.5 |

L1min = Minimum submergence depth for motor without casing with continuous duty S1 (NPSHR permitting)
Lmin = Minimum submergence depth for motor without casing with intermittent duty S3 (NPSHR permitting)

# GKC

## Dimensions and weight

**Duck foot coupling**

**SAK**

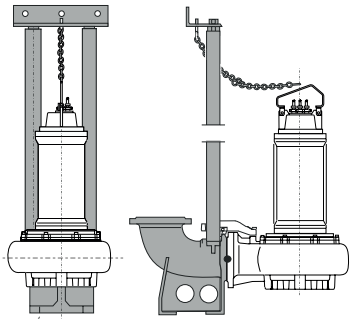

**Submersible pump rest**

**APK**

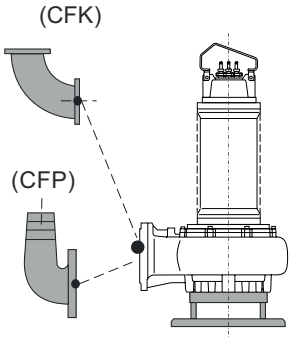


**Dry chamber pump rest**

**APCK**

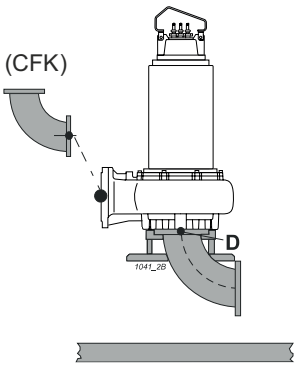


**Dry chamber pump support**

**SOK**

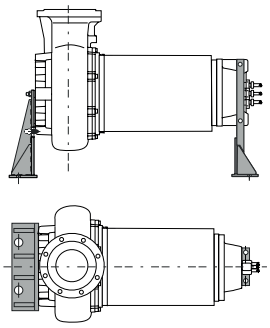

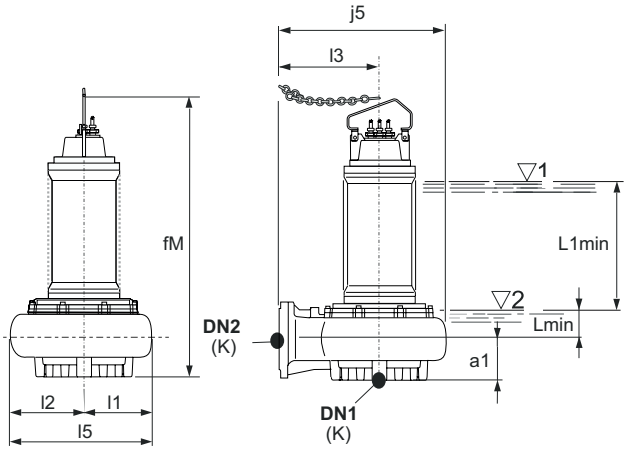


HL minimum level of submersibility

| TYPE | | | mm | | | | | | | | | | Kg |
|---|---|---|---|---|---|---|---|---|---|---|---|---|---|
| | DN1 | DN2 | a1 | fM | j5 | K | l1 | l2 | l3 | l5 | L1min | Lmin | Weight |
| **GKC8 250-163A-0210Z** | 250 | 250 | 220 | 1612.5 | 935 | 10 | 330 | 405 | 570 | 735 | 930 | 185 | 653 |
| **GKC8 250-163A-0210Z-R** | 250 | 250 | 220 | 1612.5 | 935 | 10 | 330 | 405 | 570 | 735 | 930 | 185 | 668 |

L1min = Minimum submergence depth for motor without casing with continuous duty S1 (NPSHR permitting)
Lmin = Minimum submergence depth for motor without casing with intermittent duty S3 (NPSHR permitting)

# GKC

## Dimensions and weight

**Duck foot coupling**

**SAK**

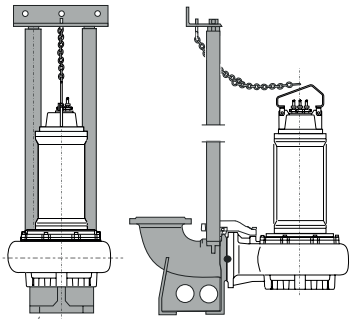

**Submersible pump rest**

**APK**

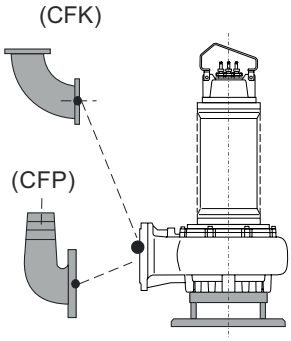


**Dry chamber pump rest**

**APCK**

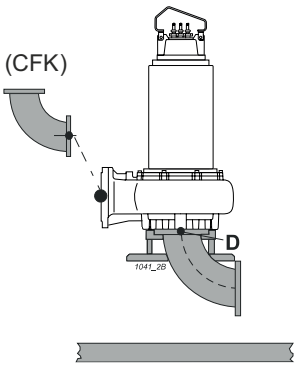


**Dry chamber pump support**

**SOK**

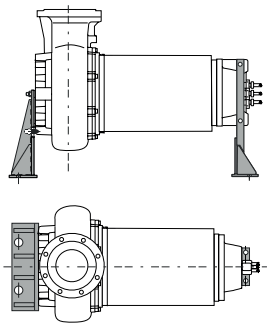

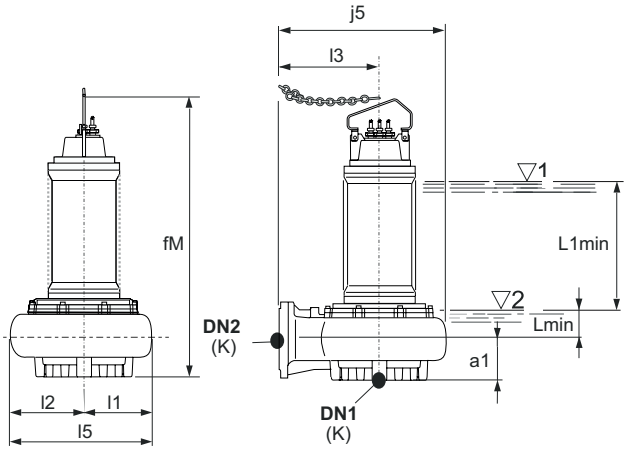


| TYPE | | | mm | | | | | | | | | | Kg |
|---|---|---|---|---|---|---|---|---|---|---|---|---|---|
| | DN1 | DN2 | a1 | fM | j5 | K | l1 | l2 | l3 | l5 | L1min | Lmin | Weight |
| **GKC6 250-163L-0250R** | 250 | 250 | 220 | 1622 | 935 | 10 | 329 | 407 | 570 | 735 | 976 | 210 | 717 |
| **GKC6 250-163G-0340R** | 250 | 250 | 220 | 1622 | 935 | 10 | 329 | 407 | 570 | 735 | 976 | 210 | 653 |
| **GKC6 250-163D-0420R** | 250 | 250 | 220 | 1676 | 935 | 10 | 329 | 407 | 570 | 735 | 1030 | 210 | 744 |
| **GKC6 250-163A-0510R** | 250 | 250 | 220 | 1709 | 935 | 10 | 329 | 407 | 570 | 735 | 1063 | 210 | 885 |
| **GKC6 250-163L-0250R-R** | 250 | 250 | 220 | 1622 | 935 | 10 | 329 | 407 | 570 | 735 | 976 | 210 | 732 |
| **GKC6 250-163G-0340R-R** | 250 | 250 | 220 | 1622 | 935 | 10 | 329 | 407 | 570 | 735 | 976 | 210 | 668 |
| **GKC6 250-163D-0420R-R** | 250 | 250 | 220 | 1676 | 935 | 10 | 329 | 407 | 570 | 735 | 1030 | 210 | 688 |
| **GKC6 250-163A-0510R-R** | 250 | 250 | 220 | 1709 | 935 | 10 | 329 | 407 | 570 | 735 | 1063 | 210 | 1023 |

L1min = Minimum submergence depth for motor without casing with continuous duty S1 (NPSHR permitting)
Lmin = Minimum submergence depth for motor without casing with intermittent duty S3 (NPSHR permitting)

# GKC

## Dimensions and weight

**Duck foot coupling**

**SAK**

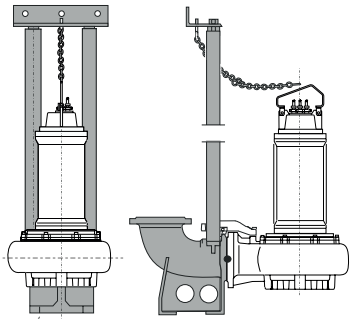

**Submersible pump rest**

**APK**

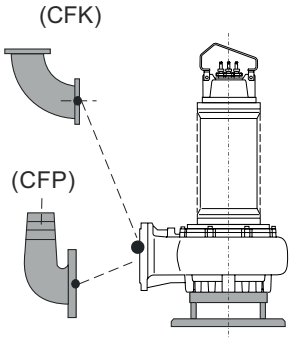


**Dry chamber pump rest**

**APCK**

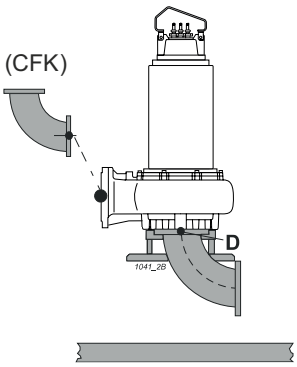


**Dry chamber pump support**

**SOK**

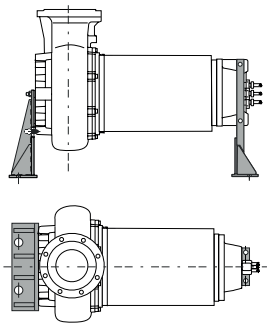

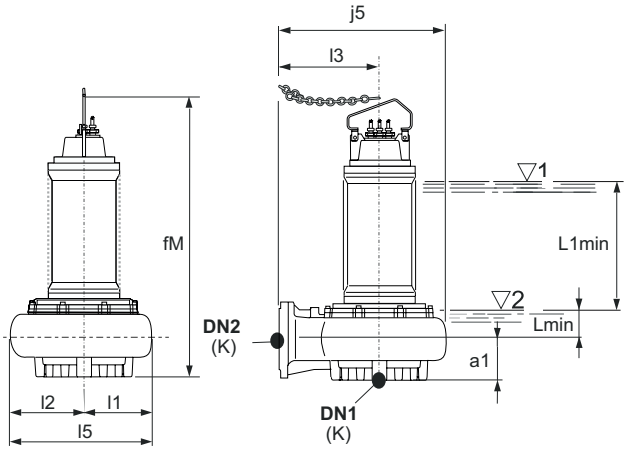


| TYPE | | | mm | | | | | | | | | | Kg |
|---|---|---|---|---|---|---|---|---|---|---|---|---|---|
| | DN1 | DN2 | a1 | fM | j5 | K | l1 | l2 | l3 | l5 | L1min | Lmin | Weight |
| GKC4 250-163M-0820R | 250 | 250 | 220 | 1709 | 935 | 10 | 329 | 407 | 570 | 735 | 1063 | 210 | - |
| GKC4 250-163L-1000T | 250 | 250 | 220 | 1880 | 935 | 10 | 330 | 405 | 570 | 735 | 1140 | 185 | 1078 |
| GKC4 250-163H-1000T | 250 | 250 | 220 | 1880 | 935 | 10 | 330 | 405 | 570 | 735 | 1140 | 185 | 1355 |
| GKC4 250-163G-1200T | 250 | 250 | 220 | 1880 | 935 | 10 | 330 | 405 | 570 | 735 | 1140 | 185 | 1416 |
| GKC4 250-163E-1450T | 250 | 250 | 220 | 1880 | 935 | 10 | 330 | 405 | 570 | 735 | 1140 | 185 | 1468 |
| GKC4 250-163T-1450T | 250 | 250 | 220 | 1880 | 935 | 10 | 330 | 405 | 570 | 735 | 1140 | 185 | 1469 |
| GKC4 250-163B-1450T | 250 | 250 | 220 | 1880 | 935 | 10 | 330 | 405 | 570 | 735 | 1140 | 185 | 1880 |
| GKC4 250-163A-1800T | 250 | 250 | 220 | 2116 | 935 | 10 | 330 | 405 | 570 | 735 | 1350 | 185 | 1872 |
| GKC4 250-163M-0820R-R | 250 | 250 | 220 | 1709 | 935 | 10 | 329 | 407 | 570 | 735 | 1063 | 210 | - |
| GKC4 250-163L-1000T-R | 250 | 250 | 220 | 1880 | 935 | 10 | 330 | 405 | 570 | 735 | 1140 | 185 | 1311 |
| GKC4 250-163H-1000T-R | 250 | 250 | 220 | 1880 | 935 | 10 | 330 | 405 | 570 | 735 | 1140 | 185 | 1588 |
| GKC4 250-163G-1200T-R | 250 | 250 | 220 | 1880 | 935 | 10 | 330 | 405 | 570 | 735 | 1140 | 185 | 1650 |
| GKC4 250-163E-1450T-R | 250 | 250 | 220 | 1880 | 935 | 10 | 330 | 405 | 570 | 735 | 1140 | 185 | 1702 |
| GKC4 250-163T-1450T-R | 250 | 250 | 220 | 1880 | 935 | 10 | 330 | 405 | 570 | 735 | 1140 | 185 | 1703 |
| GKC4 250-163B-1450T-R | 250 | 250 | 220 | 1880 | 935 | 10 | 330 | 405 | 570 | 735 | 1140 | 185 | 1705 |
| GKC4 250-163A-1800T-R | 250 | 250 | 220 | 2116 | 935 | 10 | 330 | 405 | 570 | 735 | 1350 | 185 | 2200 |

L1min = Minimum submergence depth for motor without casing with continuous duty S1 (NPSHR permitting)
Lmin = Minimum submergence depth for motor without casing with intermittent duty S3 (NPSHR permitting)

ed. 07/2025

# GKN

calpeda®

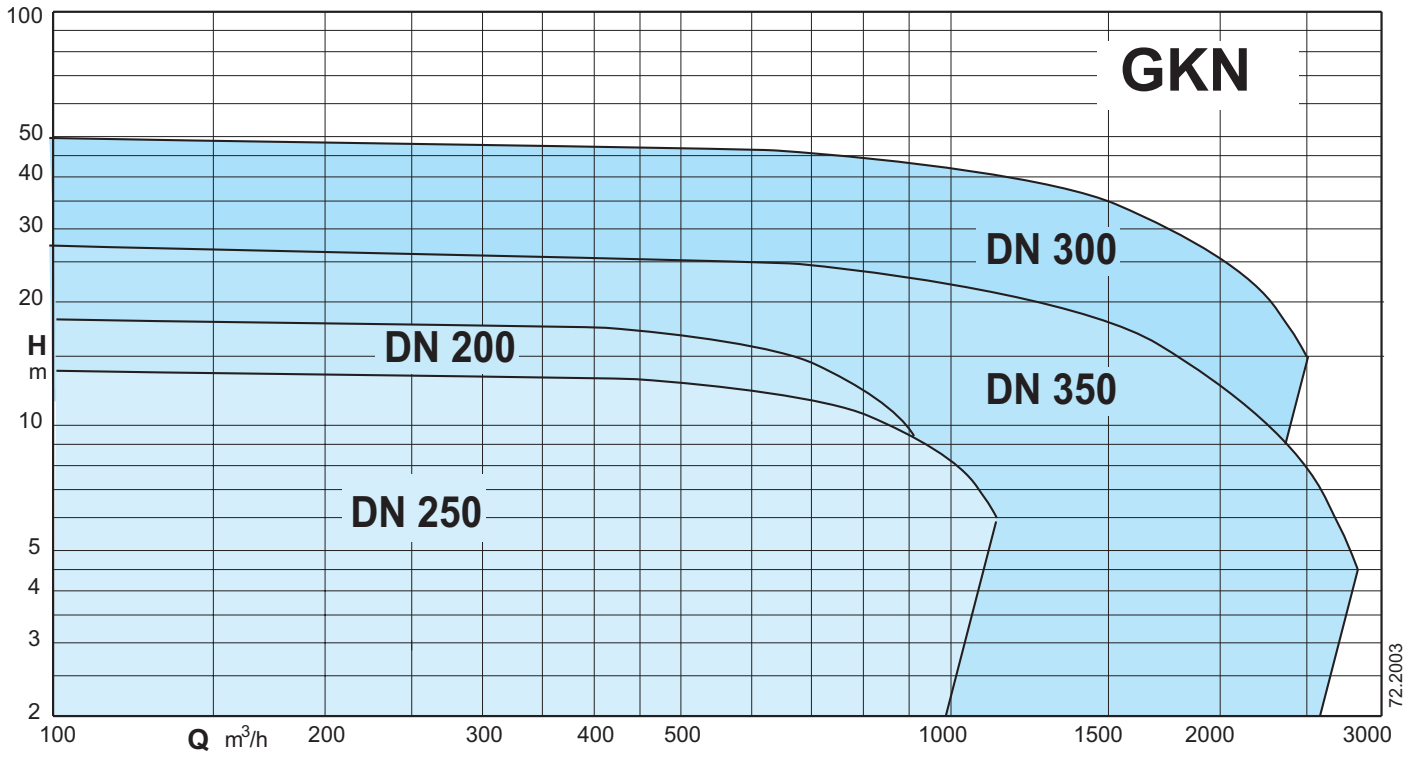


## submersible pumps with channels impeller

# GKN

calpeda®

## Construction

Submersible pumps with multi-channel impeller.
Characterised by good protection against clogging, large spherical passages, good wear resistance, low mechanical action on the fluid and high hydraulic efficiency at high flow rates.
Low vibrations thanks to the dynamically balanced impeller.
Delivery port DN 200-250-300-350.

## Applications

For the movement of sewage and sewage grates.
Particularly suitable for the emptying of sewage from cesspits or primary collection tanks or industrial waste water.
They replace single-channel pumps when a high solids passage diameter is not required.
Solid passage from 100 to 164 mm.

## Operating conditions

Liquid temperature: from 0°C to +40°C.
Maximum immersion depth: 20m (with cable of suitable length).
Maximum working pressure: 80 m.w.c.
pH of the liquid to be lifted: 4 ÷ 10
Continuous service (with water at minimum immersion level).

## Materials

Pump casing: cast iron EN-GJL250 UNI-EN 1561-11
Impeller: cast iron EN-GJL250 UNI-EN 1561-11
Motor casing: cast iron EN-GJL250 UNI-EN 1561-11 / EN-GJL450 UNI-EN 1561-11
Shaft: stainless steel X20Cr13 (AISI420)
Pump mechanical seal with flange size F - H - L - N - P
- motor side: graphite/ceramic
- pump side: silicon/ceramic carbide

Pump mechanical seal with flange size R - Z - T
- motor side: stainless steel/graphite
- pump side: Silicon carbide/silicon carbide

## Motor

Induction motor 4-6 or 8 poles, 50Hz
Three-phase version: 400/690V ± 10%
Isolation class: F or H
Degree of protection: IP 68
Max number of starts per hour:
- 20 up to 5 kW
- 15 up to 10 kW
- 10 for higher powers

Cable: length 10m
Direction of rotation: clockwise top view
Motor suitable for operation with frequency converter.

## Special features on request

(Check feasibility according to the model with our Technical Sales Office).
ATEX versions complying with EN60079-0 - EN60079-1 type I M2 Ex db h I Mb, II 2G Ex db h IIB T4 Gb.
Impeller in stainless steel AISI 316 or bronze.
Bronze impeller seat ring.
Cable length up to 40 m
Other mechanical seal.
Higher or lower liquid or ambient temperatures.
Ceramic coating.
Internal anti-erosion coating, external anti-corrosion.

## Designation

GKN4 200-100A-0260F-X-R
GK = Series
N = Multi-channel impeller
4 = Number of poles
200 = Delivery port diameter in mm
100 = Free passage in mm
A = Impeller trim
0260 = Motor size (P2 = 26 kW)
F = Size of electric motor flanging
X = Versione ATEX
R = With cooling jacket / oil chamber

## Technical data

| TYPE | Version | Dry chamber version | | Probes | | Cable | | Class | Duck foot coupling | Submersible pump rest | Dry chamber pump rest | Dry chamber pump support |
|---|---|---|---|---|---|---|---|---|---|---|---|---|
| | ATEX | Vertical | Horizontal | thermal | conductivity | NSSHOU-J | H07RN-F | Isolation | | | | |
| GKN6 200-100A-0075N | o | # | – | • | • | • | – | H / IE3 | SAK 200-250-3 | APK 150 | APCK 200 | SOK150/N3 |
| GKN6 200-100G-0075N | o | # | – | • | • | • | – | H / IE3 | SAK 200-250-3 | APK 150 | APCK 200 | SOK150/N3 |
| GKN6 200-100L-0075N | o | # | – | • | • | • | – | H / IE3 | SAK 200-250-3 | APK 150 | APCK 200 | SOK150/N3 |
| GKN6 200-100A-0110N | o | # | – | • | • | • | – | H / IE3 | SAK 200-250-3 | APK 150 | APCK 200 | – |
| GKN6 200-100G-0110N | o | # | – | • | • | • | – | H / IE3 | SAK 200-250-3 | APK 150 | APCK 200 | – |
| GKN6 200-100L-0110N | o | # | – | • | • | • | – | H / IE3 | SAK 200-250-3 | APK 150 | APCK 200 | – |
| GKN4 200-100A-0260N | o | # | – | • | • | • | – | H / IE3 | SAK 200-250-3 | APK 150 | APCK 200 | – |
| GKN4 200-100D-0210N | o | # | – | • | • | • | – | H / IE3 | SAK 200-250-3 | APK 150 | APCK 200 | – |
| GKN4 200-100G-0193N | o | # | – | • | • | • | – | H / IE3 | SAK 200-250-3 | APK 150 | APCK 200 | – |
| GKN4 200-100L-0165N | o | # | – | • | • | • | – | H / IE3 | SAK 200-250-3 | APK 150 | APCK 200 | – |
| GKN6 250-115A-0195P | o | # | – | • | • | • | – | H / IE3 | SAK 250-300-3 | APK 250 | APCK 250 | – |
| GKN6 250-115D-0150P | o | # | – | • | • | • | – | H / IE3 | SAK 250-300-3 | APK 250 | APCK 250 | – |
| GKN6 250-115I-0110P | o | # | – | • | • | • | – | H / IE3 | SAK 250-300-3 | APK 250 | APCK 250 | – |
| GKN8 300-143A-0210Z | – | – | – | • | • | – | • | F | SAK 300-350-3 | APK 350 | – | – |
| GKN8 300-143D-0170Z | – | – | – | • | • | – | • | F | SAK 300-350-3 | APK 350 | – | – |
| GKN8 300-143B-0210Z-R | – | $ | $ | • | • | – | • | F | SAK 300-350-3 | – | APCK 300 | – |
| GKN8 300-143E-0170Z-R | – | $ | $ | • | • | – | • | F | SAK 300-350-3 | – | APCK 300 | – |

• = Standard
- = Not present
o = Optional
# = Version with oil chamber
$ = Version with cooling jacket
# = In case of operation in a dry chamber or with a low level of the pumped liquid, it is necessary to introduce the cooling oil according to the quantities indicated in the use and maintenance manual

# GKN

calpeda®

## Technical data

| TYPE | Version | Dry chamber version | | Probes | | Cable | | Class | Duck foot coupling | Submersible pump rest | Dry chamber pump rest | Dry chamber pump support |
|---|---|---|---|---|---|---|---|---|---|---|---|---|
| | ATEX | Vertical | Horizontal | thermal | conductivity | NSSHOU-J | H07RN-F | Isolation | | | | |
| GKN6 300-143A-0510R | – | – | – | • | • | • | – | H / IE3 | SAK 300-350-3 | APK 350 | – | – |
| GKN6 300-143D-0420R | – | – | – | • | • | • | – | H / IE3 | SAK 300-350-3 | APK 350 | – | – |
| GKN6 300-143G-0340R | – | – | – | • | • | • | – | H / IE3 | SAK 300-350-3 | APK 350 | – | – |
| GKN6 300-143M-0250R | – | – | – | • | • | • | – | H / IE3 | SAK 300-350-3 | APK 350 | – | – |
| GKN6 300-143B-0510R-R | – | # | – | • | • | • | – | H / IE3 | – | – | APCK 300 | – |
| GKN6 300-143E-0420R-R | – | # | – | • | • | • | – | H / IE3 | – | – | APCK 300 | – |
| GKN6 300-143H-0340R-R | – | # | – | • | • | • | – | H / IE3 | – | – | APCK 300 | – |
| GKN6 300-143N-0250R-R | – | # | – | • | • | • | – | H / IE3 | – | – | APCK 300 | – |
| GKN4 300-143A-1800T | – | – | – | • | • | – | • | F | SAK 300-350-3A | APK 350 | – | – |
| GKN4 300-143D-1450T | – | – | – | • | • | – | • | F | SAK 300-350-3A | APK 350 | – | – |
| GKN4 300-143G-1200T | – | – | – | • | • | – | • | F | SAK 300-350-3A | APK 350 | – | – |
| GKN4 300-143I-1000T | – | – | – | • | • | – | • | F | SAK 300-350-3A | APK 350 | – | – |
| GKN4 300-143M-0900T | – | – | – | • | • | – | • | F | SAK 300-350-3A | APK 350 | – | – |
| GKN4 300-143N-0820R | – | – | – | • | • | • | – | H / IE3 | SAK 300-350-3A | APK 350 | – | – |
| GKN4 300-143B-1800T-R | – | $ | $ | • | • | – | • | F | SAK 300-350-3A | – | APCK 300 | SOK350-315 |
| GKN4 300-143E-1450T-R | – | $ | $ | • | • | – | • | F | SAK 300-350-3A | – | APCK 300 | SOK350-280 |
| GKN4 300-143H-1200T-R | – | $ | $ | • | • | – | • | F | SAK 300-350-3A | – | APCK 300 | SOK350-280 |
| GKN4 300-143L-1000T-R | – | $ | $ | • | • | – | • | F | SAK 300-350-3A | – | APCK 300 | SOK350-280 |
| GKN4 300-143P-0900T-R | – | $ | $ | • | • | – | • | F | SAK 300-350-3A | – | APCK 300 | SOK350-250 |
| GKN4 300-143Q-0820R-R | – | # | – | • | • | • | – | H / IE3 | SAK 300-350-3A | – | APCK 300 | – |
| GKN8 350-143A-0420R | – | – | – | • | • | – | • | F | SAK 350-400-3 | APK 350 | – | – |
| GKN8 350-143G-0340R | – | – | – | • | • | – | • | F | SAK 350-400-3 | APK 350 | – | – |
| GKN8 350-143O-0250R | – | – | – | • | • | – | • | F | SAK 350-400-3 | APK 350 | – | – |
| GKN8 350-143S-0210R | – | – | – | • | • | – | • | F | SAK 350-400-3 | APK 350 | – | – |
| GKN8 350-143B-0420R-R | – | $ | $ | • | • | – | • | F | SAK 350-400-3 | – | APCK 350 | SOK350-250 |
| GKN8 350-143H-0340R-R | – | $ | $ | • | • | – | • | F | SAK 350-400-3 | – | APCK 350 | SOK350-225 |
| GKN8 350-143P-0250R-R | – | $ | $ | • | • | – | • | F | SAK 350-400-3 | – | APCK 350 | SOK350-225 |
| GKN8 350-143T-0210R-R | – | $ | $ | • | • | – | • | F | SAK 350-400-3 | – | APCK 350 | SOK350-200 |
| GKN6 350-164S-0510R | – | – | – | • | • | • | – | H / IE3 | SAK 350-400-3A | APK 350 | – | – |
| GKN6 350-164V-0420R | – | – | – | • | • | • | – | H / IE3 | SAK 350-400-3A | APK 350 | – | – |
| GKN6 350-164T-0510R-R | – | # | – | • | • | • | – | H / IE3 | – | – | APCK 350 | – |
| GKN6 350-164W-0420R-R | – | # | – | • | • | • | – | H / IE3 | – | – | APCK 350 | – |
| GKN6 350-164A-1000T | – | – | – | • | • | – | • | F | SAK 350-400-3A | APK 350 | – | – |
| GKN6 350-164B-1000T-R | – | $ | $ | • | • | – | • | F | SAK 350-400-3A | – | APCK 350 | SOK350-280 |
| GKN6 350-164G-0820R | – | – | – | • | • | • | – | H / IE3 | SAK 350-400-3A | APK 350 | – | – |
| GKN6 350-164H-0820R-R | – | # | $ | • | • | • | – | H / IE3 | SAK 350-400-3A | – | APCK 350 | – |
| GKN6 350-164O-0600T | – | – | – | • | • | – | • | F | SAK 350-400-3A | APK 350 | – | – |
| GKN6 350-164P-0600T-R | – | $ | $ | • | • | – | • | F | SAK 350-400-3A | – | APCK 350 | SOK350-280 |

• = Standard
- = Not present
o = Optional
# = Version with oil chamber
$ = Version with cooling jacket

# = In case of operation in a dry chamber or with a low level of the pumped liquid, it is necessary to introduce the cooling oil according to the quantities indicated in the use and maintenance manual

# GKN

calpeda®

## Performance

### n ≈ 950 1/min

| | | | | Q = Flow | | | | | | | | | | | | | |
|---|---|---|---|---|---|---|---|---|---|---|---|---|---|---|---|---|---|
| | | | | m³/h | 0 | 108 | 126 | 144 | 162 | 180 | 216 | 252 | 288 | 324 | 360 | 450 | 540 |
| Model | 400V | 690V | P2 | l/min | | 1800 | 2100 | 2400 | 2700 | 3000 | 3600 | 4200 | 4800 | 5400 | 6000 | 7500 | 9000 |
| | A | | kW | H (m) = Total head | | | | | | | | | | | | | |
| GKN6 200-100L-0075N | 15,8 | 9,1 | 7,5 | | 5,9 | - | 4,8 | 4,6 | 4,5 | 4,3 | 3,9 | 3,5 | 3,1 | 2,7 | 2,3 | - | - |
| GKN6 200-100G-0075N | 15,8 | 9,1 | 7,5 | | 7,7 | - | 6,1 | 5,9 | 5,7 | 5,6 | 5,2 | 4,8 | 4,4 | 3,9 | 3,4 | 2,2 | - |
| GKN6 200-100A-0075N | 15,8 | 9,1 | 7,5 | | 10,4 | - | - | - | 7,9 | 7,7 | 7,3 | 6,9 | 6,4 | 5,9 | 5,3 | 3,8 | 2,1 |
| GKN6 200-100L-0110N | 23,8 | 13,7 | 11 | | 5,9 | 5 | 4,8 | 4,6 | 4,4 | 4,3 | 4 | 3,7 | 3,3 | 3 | 2,5 | - | - |
| GKN6 200-100G-0110N | 23,8 | 13,7 | 11 | | 8,1 | - | - | 6,4 | 6,2 | 6 | 5,6 | 5,3 | 4,9 | 4,4 | 4 | 2,7 | - |
| GKN6 200-100A-0110N | 23,8 | 13,7 | 11 | | 11,6 | - | - | - | 8,2 | 8 | 7,6 | 7,2 | 6,9 | 6,5 | 6 | 4,7 | 3,1 |

### n ≈ 1450 1/min

| | | | | Q = Flow | | | | | | | | | | | | |
|---|---|---|---|---|---|---|---|---|---|---|---|---|---|---|---|---|
| | | | | m³/h | 0 | 216 | 252 | 288 | 324 | 360 | 450 | 540 | 630 | 720 | 810 | 900 |
| Model | 400V | 690V | P2 | l/min | | 3600 | 4200 | 4800 | 5400 | 6000 | 7500 | 9000 | 10500 | 12000 | 13500 | 15000 |
| | A | | kW | H (m) = Total head | | | | | | | | | | | | |
| GKN4 200-100L-0165N | 31,2 | 18 | 16,5 | | 12,9 | 10 | 9,5 | 9 | 8,6 | 8,1 | 6,9 | 5,4 | 3,6 | - | - | - |
| GKN4 200-100G-0193N | 38,8 | 22,4 | 19,3 | | 18 | 14,2 | 13,6 | 13 | 12,4 | 11,9 | 10,4 | 8,8 | 7 | 4,9 | 2,9 | - |
| GKN4 200-100D-0210N | 39 | 22,5 | 21 | | 20,1 | - | 14,9 | 14,2 | 13,6 | 13 | 11,6 | 10 | 8,1 | 6 | 3,8 | - |
| GKN4 200-100A-0260N | 47,2 | 27,3 | 26 | | 24,9 | 18,1 | 17,6 | 17 | 16,5 | 15,9 | 14,5 | 12,9 | 11 | 8,7 | 6,1 | 3,7 |

### n ≈ 950 1/min

| | | | | Q = Flow | | | | | | | | | | | | | |
|---|---|---|---|---|---|---|---|---|---|---|---|---|---|---|---|---|---|
| | | | | m³/h | 0 | 252 | 288 | 324 | 360 | 450 | 540 | 630 | 720 | 810 | 900 | 990 | 1080 |
| Model | 400V | 690V | P2 | l/min | | 4200 | 4800 | 5400 | 6000 | 7500 | 9000 | 10500 | 12000 | 13500 | 15000 | 16500 | 18000 |
| | A | | kW | H (m) = Total head | | | | | | | | | | | | | |
| GKN6 250-115I-0110P | 23,8 | 13,7 | 11 | | 8,4 | 6,4 | 6,1 | 5,8 | 5,6 | 4,9 | 4 | 3,1 | 2,1 | - | - | - | - |
| GKN6 250-115D-0150P | 33 | 19,1 | 15 | | 11,4 | 9,4 | 9,1 | 8,8 | 8,5 | 7,7 | 6,8 | 5,8 | 4,7 | 3,5 | 2,2 | - | - |
| GKN6 250-115A-0195P | 40,2 | 23,2 | 19,5 | | 15 | 13,1 | 12,7 | 12,3 | 11,9 | 10,8 | 9,8 | 8,7 | 7,6 | 6,4 | 5,1 | 3,8 | 2,5 |

### n ≈ 725 1/min

| | | | | Q = Flow | | | | | | | | | | | | | | |
|---|---|---|---|---|---|---|---|---|---|---|---|---|---|---|---|---|---|---|
| | | | | m³/h | 0 | 288 | 360 | 450 | 540 | 630 | 720 | 810 | 900 | 990 | 1080 | 1170 | 1260 | 1350 |
| Model | 400V | 690V | P2 | l/min | | 4800 | 6000 | 7500 | 9000 | 10500 | 12000 | 13500 | 15000 | 16500 | 18000 | 19500 | 21000 | 22500 |
| | A | | kW | H (m) = Total head | | | | | | | | | | | | | | |
| GKN8 300-143D-0170Z | 36,0 | 20,6 | 17 | | 11,1 | 8,6 | 8,2 | 7,7 | 7,3 | 6,8 | 6,3 | 5,7 | 5 | 4,2 | 3,4 | 2,6 | 1,7 | - |
| GKN8 300-143A-0210Z | 44,1 | 25,2 | 21 | | 13 | 10,1 | 9,8 | 9,4 | 8,9 | 8,3 | 7,7 | 6,9 | 6,2 | 5,4 | 4,6 | 3,8 | 3 | 2,2 |
| GKN8 300-143E-0170Z-R | 36,0 | 20,6 | 17 | | 11,1 | 8,6 | 8,2 | 7,7 | 7,3 | 6,8 | 6,3 | 5,7 | 5 | 4,2 | 3,4 | 2,6 | 1,7 | - |
| GKN8 300-143B-0210Z-R | 44,1 | 25,2 | 21 | | 13 | 10,1 | 9,8 | 9,4 | 8,9 | 8,3 | 7,7 | 6,9 | 6,2 | 5,4 | 4,6 | 3,8 | 3 | 2,2 |

### n ≈ 950 1/min

| | | | | Q = Flow | | | | | | | | | | | | | |
|---|---|---|---|---|---|---|---|---|---|---|---|---|---|---|---|---|---|
| | | | | m³/h | 0 | 324 | 360 | 450 | 540 | 630 | 720 | 900 | 1080 | 1260 | 1440 | 1620 | 1800 |
| Model | 400V | 690V | P2 | l/min | | 5400 | 6000 | 7500 | 9000 | 10500 | 12000 | 15000 | 18000 | 21000 | 24000 | 27000 | 30000 |
| | A | | kW | H (m) = Total head | | | | | | | | | | | | | |
| GKN6 300-143M-0250R | 49 | 28,3 | 25 | | 11,6 | 9,6 | 9,4 | 9 | 8,5 | 8,1 | 7,6 | 6,4 | 5,1 | 3,5 | 2 | - | - |
| GKN6 300-143G-0340R | 64,6 | 37,3 | 34 | | 16,4 | - | 12,7 | 12,4 | 12 | 11,5 | 10,9 | 9,6 | 8 | 6,2 | 4,3 | - | - |
| GKN6 300-143D-0420R | 76,5 | 44,2 | 42 | | 20,5 | - | 15,3 | 14,8 | 14,3 | 13,9 | 13,4 | 12,2 | 10,6 | 8,6 | 6,4 | 4,2 | - |
| GKN6 300-143A-0510R | 91 | 52,5 | 51 | | 23,7 | - | 18 | 17,5 | 17 | 16,6 | 16,1 | 14,8 | 13,1 | 11 | 8,8 | 6,5 | 4,1 |
| GKN6 300-143N-0250R-R | 49 | 28,3 | 25 | | 11,6 | - | 9,7 | 9,2 | 8,8 | 8,3 | 7,8 | 6,7 | 5,3 | 3,8 | - | - | - |
| GKN6 300-143H-0340R-R | 64,6 | 37,3 | 34 | | 16,4 | - | 13 | 12,7 | 12,3 | 11,8 | 11,2 | 9,9 | 8,3 | 6,5 | 4,7 | - | - |
| GKN6 300-143E-0420R-R | 76,5 | 44,2 | 42 | | 20,5 | - | 15,6 | 15,1 | 14,5 | 13,9 | 13,4 | 12,1 | 10,5 | 8,5 | 6,3 | 4,1 | - |
| GKN6 300-143B-0510R-R | 91 | 52,5 | 51 | | 23,7 | - | 18,9 | 18,2 | 17,6 | 17,1 | 16,5 | 15,1 | 13,3 | 11,2 | 8,9 | 6,5 | 4,2 |

# GKN

calpeda®

## Performance

### n ≈ 1450 1/min

| Model | 400V | 690V | P2 | Q = Flow | | | | | | | | | | | | | | | | | |
|---|---|---|---|---|---|---|---|---|---|---|---|---|---|---|---|---|---|---|---|---|---|
| | | | | m³/h | 0 | 540 | 630 | 720 | 810 | 900 | 990 | 1080 | 1170 | 1260 | 1440 | 1620 | 1800 | 1980 | 2160 | 2340 | 2520 |
| | | | | l/min | | 9000 | 10500 | 12000 | 13500 | 15000 | 16500 | 18000 | 19500 | 21000 | 24000 | 27000 | 30000 | 33000 | 36000 | 39000 | 42000 |
| | A | | kW | H (m) = Total head | | | | | | | | | | | | | | | | | |
| GKN4 300-143N-0820R | 142 | 82 | 82 | | 30,8 | 24 | 22,9 | 21,9 | 20,8 | 19,8 | 18,8 | 17,8 | 16,8 | 15,8 | 13,8 | 11,7 | 9,5 | 7,2 | 4,5 | 1,6 | - |
| GKN4 300-143M-0900T | 159 | 90,9 | 90 | | 32,1 | 25,2 | 24,2 | 23,1 | 22,1 | 21 | 20 | 18,9 | 17,9 | 16,9 | 14,8 | 12,7 | 10,6 | 8,3 | 5,8 | 2,8 | - |
| GKN4 300-143I-1000T | 184 | 105 | 100 | | 34,4 | 27,5 | 26,4 | 25,4 | 24,3 | 23,2 | 22,1 | 21 | 19,9 | 18,9 | 16,7 | 14,5 | 12,2 | 9,8 | 7,4 | 4,9 | 2,3 |
| GKN4 300-143G-1200T | 223 | 128 | 120 | | 37,9 | 32,9 | 31,3 | 29,8 | 28,5 | 27,2 | 25,9 | 24,8 | 23,7 | 22,6 | 20,5 | 18,3 | 16,1 | 13,6 | 10,9 | 8,1 | 5,2 |
| GKN4 300-143D-1450T | 262 | 150 | 145 | | 48,3 | 38,4 | 37 | 35,7 | 34,5 | 33,3 | 32,1 | 30,9 | 29,7 | 28,4 | 25,7 | 22,8 | 20 | 17,2 | 14,6 | 12,2 | 10 |
| GKN4 300-143A-1800T | 321 | 184 | 180 | | 56,6 | 46,8 | 45,4 | 44,2 | 43,1 | 42 | 40,9 | 39,7 | 38,6 | 37,4 | 34,8 | 32 | 29 | 25,9 | 22,6 | 19,3 | 15,9 |
| GKN4 300-143Q-0820R-R | 142 | 82 | 82 | | 30,8 | 24 | 22,9 | 21,9 | 20,8 | 19,8 | 18,8 | 17,8 | 16,8 | 15,8 | 13,8 | 11,7 | 9,5 | 7,2 | 4,5 | 1,6 | - |
| GKN4 300-143P-0900T-R | 159 | 90,9 | 90 | | 32,1 | 25,2 | 24,2 | 23,1 | 22,1 | 21 | 20 | 18,9 | 17,9 | 16,9 | 14,8 | 12,7 | 10,6 | 8,3 | 5,8 | 2,8 | - |
| GKN4 300-143L-1000T-R | 184 | 105 | 100 | | 34,4 | 27,5 | 26,4 | 25,4 | 24,3 | 23,2 | 22,1 | 21 | 19,9 | 18,9 | 16,7 | 14,5 | 12,2 | 9,8 | 7,4 | 4,9 | 2,3 |
| GKN4 300-143H-1200T-R | 223 | 128 | 120 | | 37,9 | 32,9 | 31,3 | 29,8 | 28,5 | 27,2 | 25,9 | 24,8 | 23,7 | 22,6 | 20,5 | 18,3 | 16,1 | 13,6 | 10,9 | 8,1 | 5,2 |
| GKN4 300-143E-1450T-R | 262 | 150 | 145 | | 48,3 | 38,4 | 37 | 35,7 | 34,5 | 33,3 | 32,1 | 30,9 | 29,7 | 28,4 | 25,7 | 22,8 | 20 | 17,2 | 14,6 | 12,2 | 10 |
| GKN4 300-143B-1800T-R | 321 | 184 | 180 | | 56,6 | 46,8 | 45,4 | 44,2 | 43,1 | 42 | 40,9 | 39,7 | 38,6 | 37,4 | 34,8 | 32 | 29 | 25,9 | 22,6 | 19,3 | 15,9 |

### n ≈ 725 1/min

| Model | 400V | 690V | P2 | Q = Flow | | | | | | | | | | | | | | | | | |
|---|---|---|---|---|---|---|---|---|---|---|---|---|---|---|---|---|---|---|---|---|---|
| | | | | m³/h | 0 | 252 | 270 | 360 | 450 | 540 | 630 | 720 | 900 | 1080 | 1260 | 1440 | 1620 | 1800 | 1980 | 2160 | |
| | | | | l/min | | 4200 | 4500 | 6000 | 7500 | 9000 | 10500 | 12000 | 15000 | 18000 | 21000 | 24000 | 27000 | 30000 | 33000 | 36000 | |
| | A | | kW | H (m) = Total head | | | | | | | | | | | | | | | | | |
| GKN8 350-143S-0210R | 44,1 | 25,2 | 21 | | 8,4 | 7,2 | 7,2 | 7,1 | 7 | 6,8 | 6,5 | 6,2 | 5,6 | 4,8 | 3,8 | 2,8 | 1,8 | - | - | - | |
| GKN8 350-143O-0250R | 58,5 | 33,4 | 25 | | 10,1 | - | - | 8,7 | 8,5 | 8,3 | 8 | 7,6 | 6,8 | 5,9 | 4,9 | 3,8 | 2,5 | - | - | - | |
| GKN8 350-143G-0340R | 80,0 | 45,7 | 34 | | 13,9 | - | - | 12 | 11,5 | 11,1 | 10,7 | 10,3 | 9,4 | 8,4 | 7,3 | 6,1 | 4,8 | 3,4 | 2 | - | |
| GKN8 350-143A-0420R | 90,5 | 51,7 | 42 | | 16,1 | - | - | 13,5 | 13,1 | 12,8 | 12,4 | 12 | 11,1 | 10,1 | 9,1 | 8 | 6,7 | 5,3 | 3,9 | 2,4 | |
| GKN8 350-143T-0210R-R | 44,1 | 25,2 | 21 | | 8,4 | 7,2 | 7,2 | 7,1 | 7 | 6,8 | 6,5 | 6,2 | 5,6 | 4,8 | 3,8 | 2,8 | 1,8 | - | - | - | |
| GKN8 350-143P-0250R-R | 58,5 | 33,4 | 25 | | 10,1 | - | - | 8,7 | 8,5 | 8,3 | 8 | 7,6 | 6,8 | 5,9 | 4,9 | 3,8 | 2,5 | - | - | - | |
| GKN8 350-143H-0340R-R | 80,0 | 45,7 | 34 | | 13,9 | - | - | 12 | 11,5 | 11,1 | 10,7 | 10,3 | 9,4 | 8,4 | 7,3 | 6,1 | 4,8 | 3,4 | 2 | - | |
| GKN8 350-143B-0420R-R | 90,5 | 51,7 | 42 | | 16,1 | - | - | 13,5 | 13,1 | 12,8 | 12,4 | 12 | 11,1 | 10,1 | 9,1 | 8 | 6,7 | 5,3 | 3,9 | 2,4 | |

### n ≈ 950 1/min

| Model | 400V | 690V | P2 | Q = Flow | | | | | | | | | | | | | | | | | |
|---|---|---|---|---|---|---|---|---|---|---|---|---|---|---|---|---|---|---|---|---|---|
| | | | | m³/h | 0 | 720 | 810 | 900 | 990 | 1080 | 1170 | 1260 | 1440 | 1620 | 1800 | 1980 | 2160 | 2340 | 2520 | 2700 | 2880 |
| | | | | l/min | | 12000 | 13500 | 15000 | 16500 | 18000 | 19500 | 21000 | 24000 | 27000 | 30000 | 33000 | 36000 | 39000 | 42000 | 45000 | 48000 |
| | A | | kW | H (m) = Total head | | | | | | | | | | | | | | | | | |
| GKN6 350-164V-0420R | 76,5 | 44,2 | 42 | | 12,7 | 10,2 | 9,9 | 9,6 | 9,3 | 8,9 | 8,5 | 8,1 | 7,1 | 5,9 | 4,6 | 3,1 | 1,8 | - | - | - | - |
| GKN6 350-164S-0510R | 91 | 52,5 | 51 | | 15,2 | 12,2 | 11,9 | 11,6 | 11,2 | 10,8 | 10,3 | 9,8 | 8,7 | 7,4 | 6,1 | 4,7 | 3,4 | 2 | - | - | - |
| GKN6 350-164W-0420R-R | 76,5 | 44,2 | 42 | | 12,7 | 10,2 | - | 9,5 | - | 8,8 | - | 8 | 7 | 5,8 | 4,4 | 3 | 1,7 | - | - | - | - |
| GKN6 350-164T-0510R-R | 91 | 52,5 | 51 | | 15,2 | 12,3 | - | 11,6 | - | 10,8 | - | 9,9 | 8,8 | 7,6 | 6,3 | 4,9 | 3,5 | 2,2 | - | - | - |
| GKN6 350-164O-0600T | 110 | 62,7 | 60 | | 21,1 | 16,4 | 15,8 | 15,1 | 14,4 | 13,8 | 13,1 | 12,3 | 10,9 | 9,4 | 8 | 6,5 | 5,2 | 3,9 | 2,7 | - | - |
| GKN6 350-164G-0820T | 145 | 82,7 | 82 | | 27,2 | 20,7 | 20 | 19,3 | 18,6 | 17,9 | 17,1 | 16,4 | 14,9 | 13,3 | 11,7 | 10 | 8,4 | 6,8 | 5,2 | 3,6 | - |
| GKN6 350-164A-1000T | 177 | 101 | 100 | | 31,7 | 24,9 | 24 | 23,2 | 22,4 | 21,6 | 20,8 | 19,9 | 18,3 | 16,6 | 14,9 | 13,3 | 11,6 | 10 | 8,3 | 6,8 | 5,2 |
| GKN6 350-164P-0600T-R | 110 | 62,7 | 60 | | 21,1 | 16,4 | 15,8 | 15,1 | 14,4 | 13,8 | 13,1 | 12,3 | 10,9 | 9,4 | 8 | 6,5 | 5,2 | 3,9 | 2,7 | - | - |
| GKN6 350-164H-0820T-R | 145 | 82,7 | 82 | | 27,2 | 20,7 | 20 | 19,3 | 18,6 | 17,9 | 17,1 | 16,4 | 14,9 | 13,3 | 11,7 | 10 | 8,4 | 6,8 | 5,2 | 3,6 | - |
| GKN6 350-164B-1000T-R | 177 | 101 | 100 | | 31,7 | 24,9 | 24 | 23,2 | 22,4 | 21,6 | 20,8 | 19,9 | 18,3 | 16,6 | 14,9 | 13,3 | 11,6 | 10 | 8,3 | 6,8 | 5,2 |

# GKN

## Characteristic curves

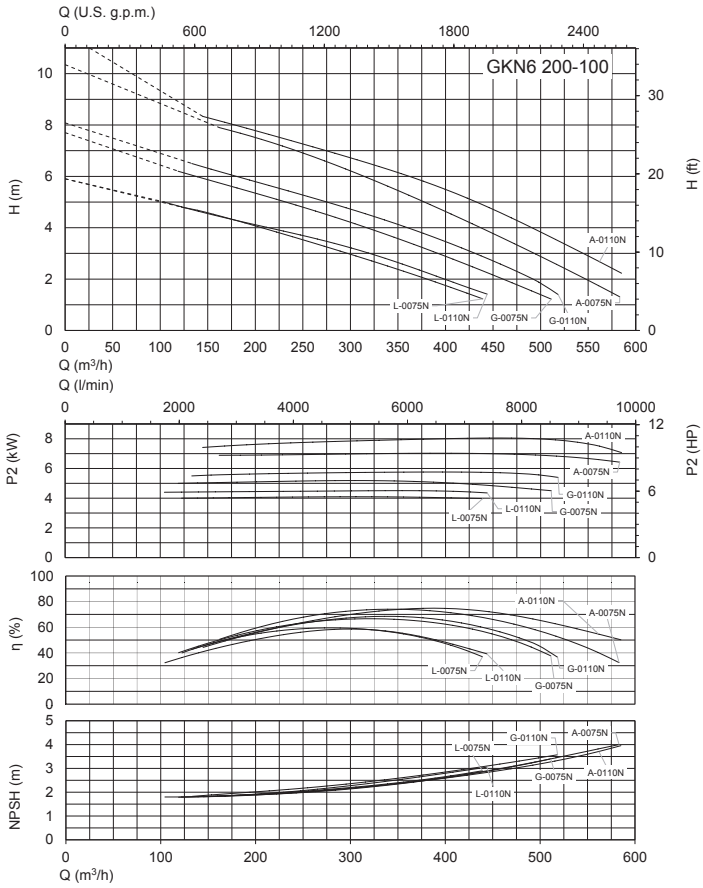


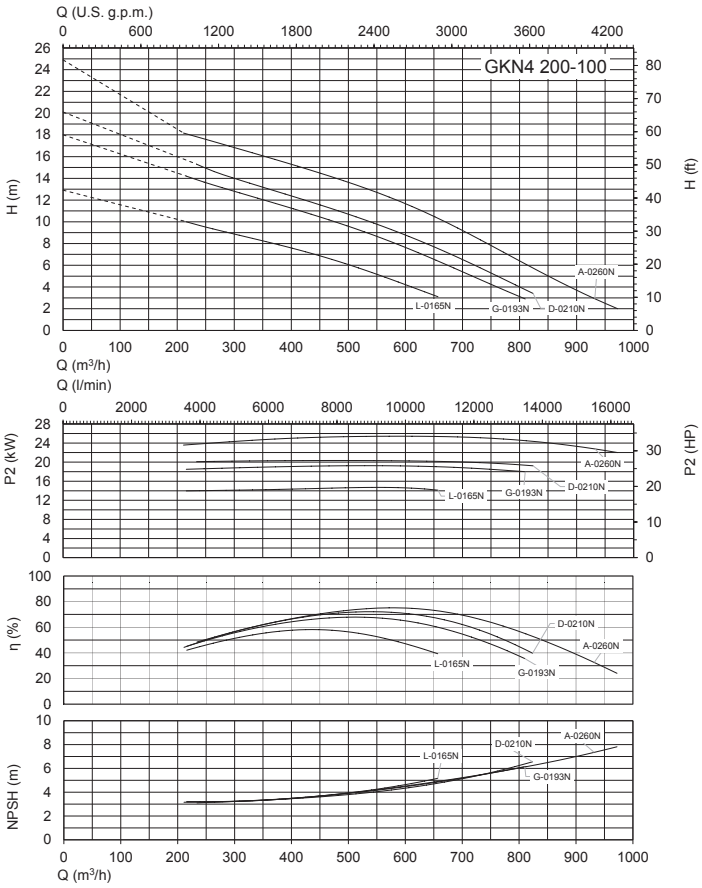


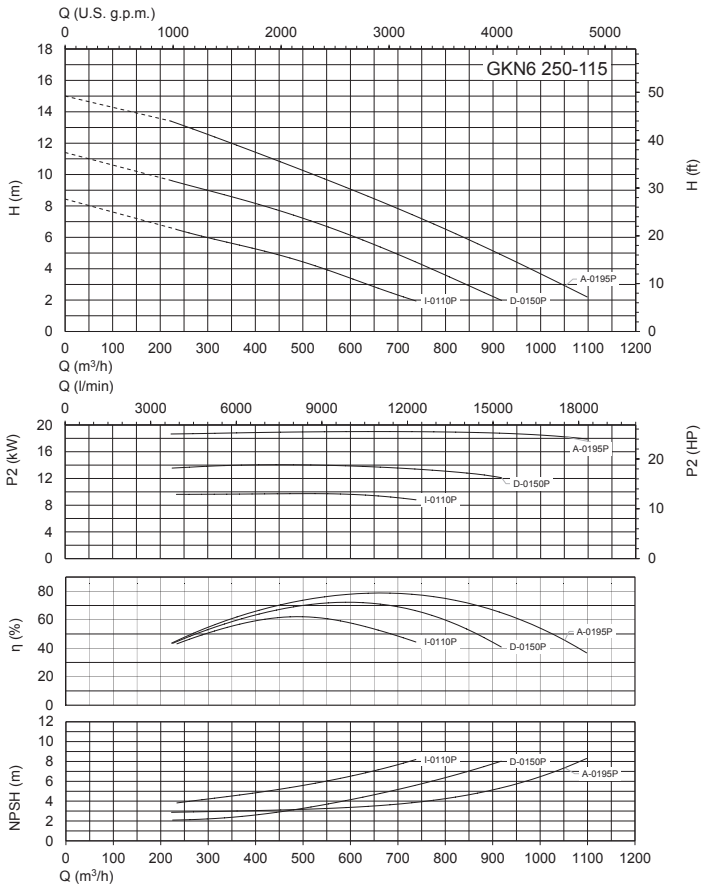


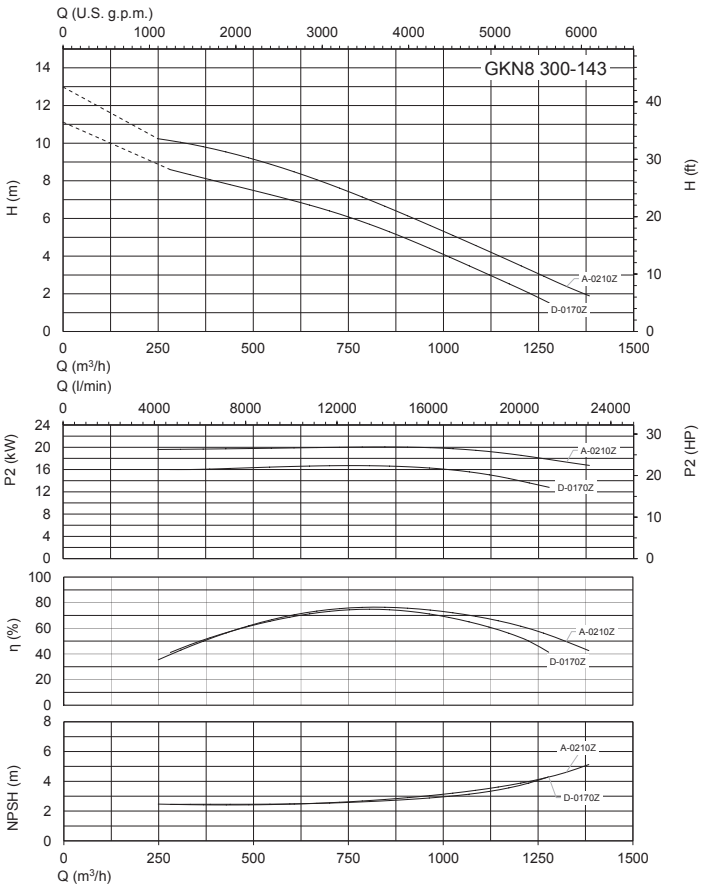

# GKN

## Characteristic curves

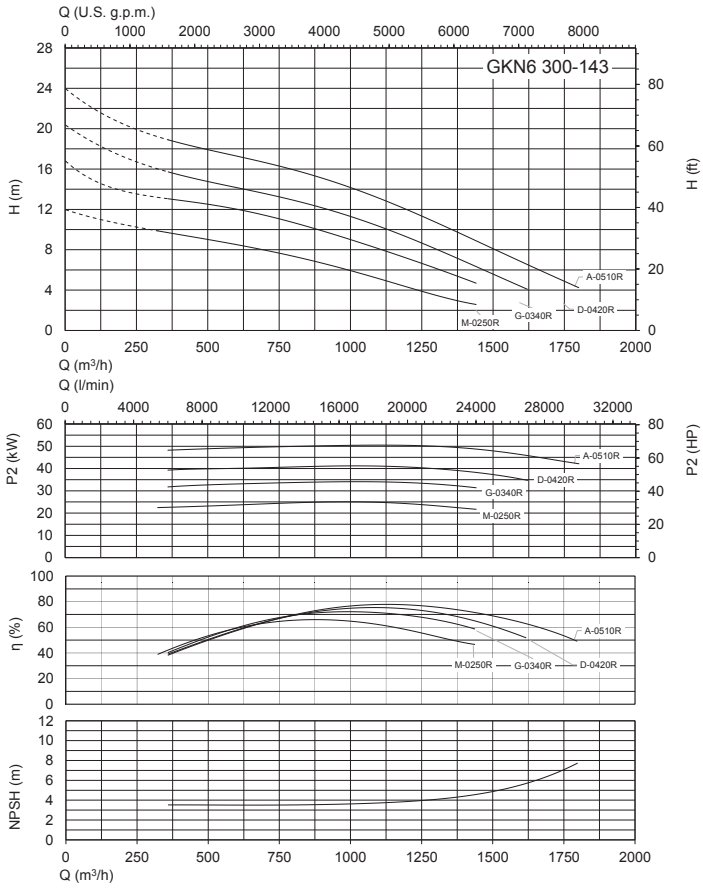


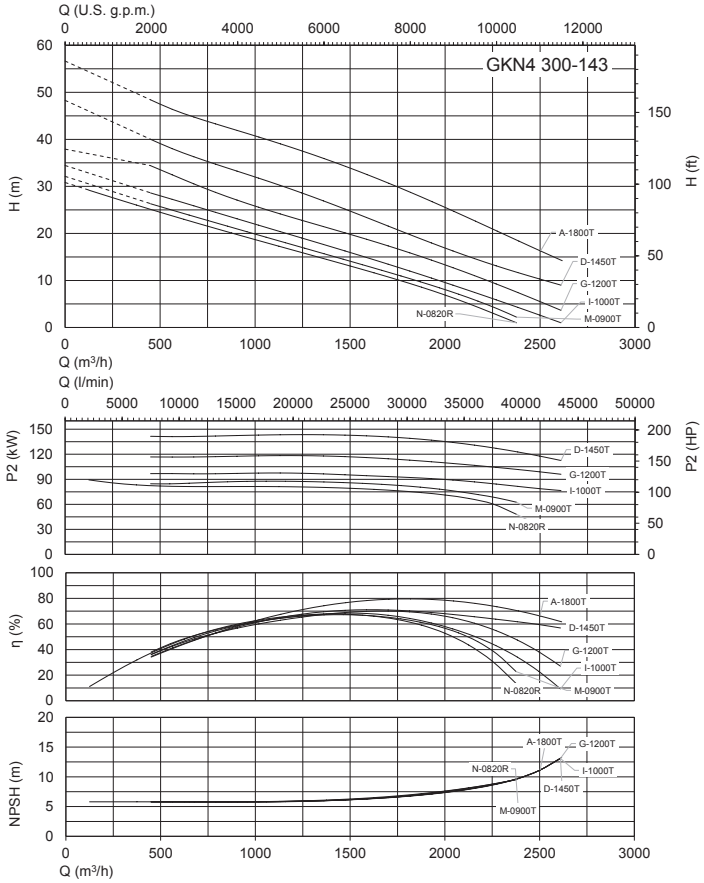


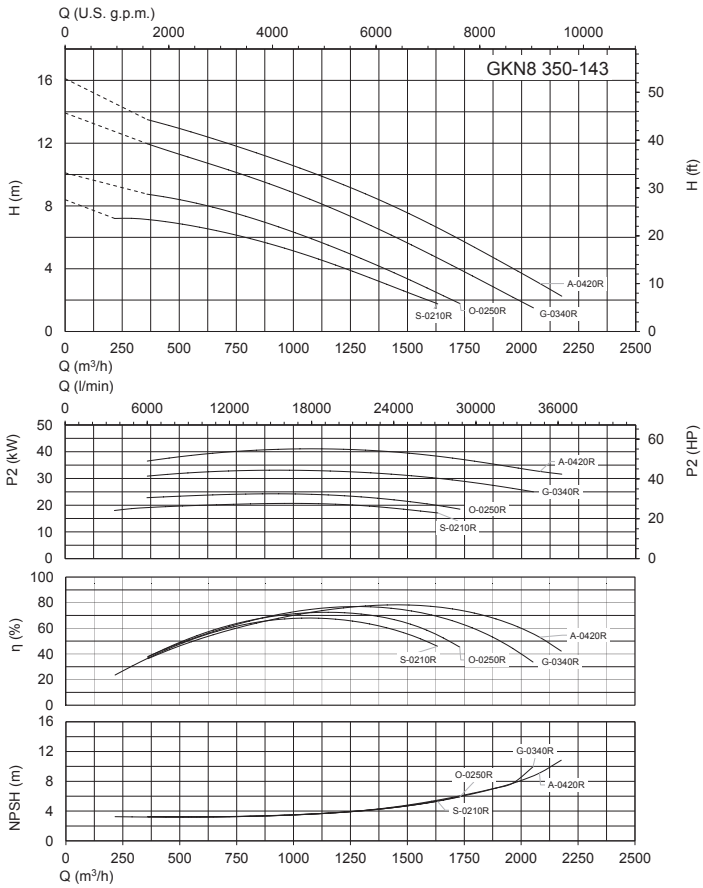


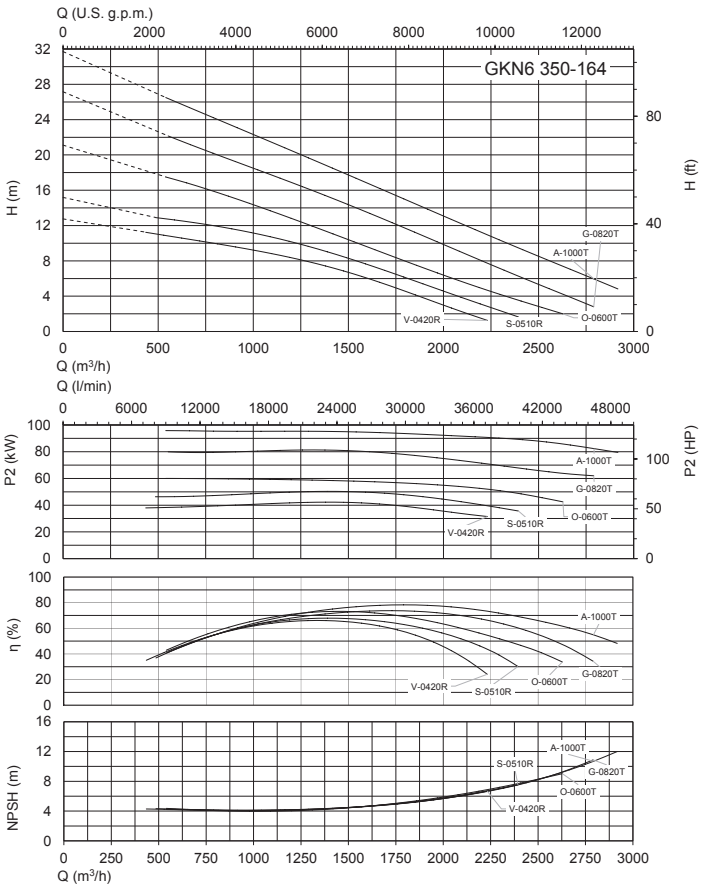

# GKN

## Dimensions and weight

**Duck foot coupling**

**SAK**

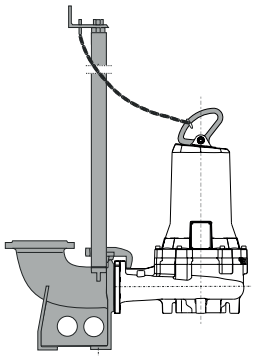

**Submersible pump rest**

**APK**

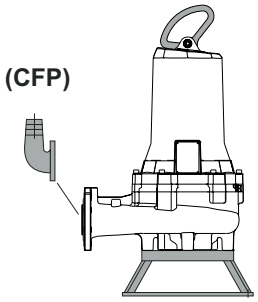


**Dry chamber pump rest**

**APCK**

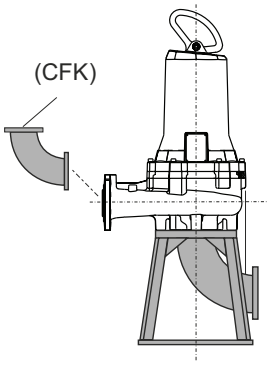


**Dry chamber pump support**

**SOK**

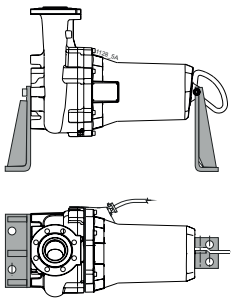

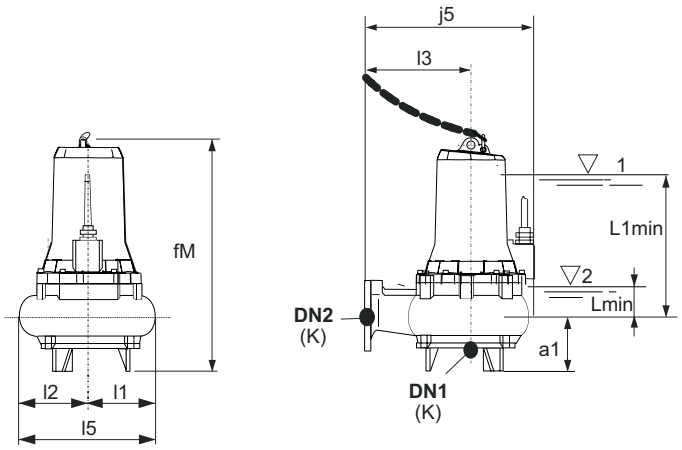


| TYPE | | | mm | | | | | | | | | | Kg |
|---|---|---|---|---|---|---|---|---|---|---|---|---|---|
| | DN1 | DN2 | a1 | fM | j5 | K | l1 | l2 | l3 | l5 | L1min | Lmin | Weight |
| **GKN6 200-100L-0075N** | 200 | 200 | 170 | 846.9 | 840 | 10 | 240 | 340 | 550 | 580 | 446 | 120 | 235 |
| **GKN6 200-100G-0075N** | 200 | 200 | 170 | 846.9 | 840 | 10 | 240 | 340 | 550 | 580 | 446 | 120 | 235.3 |
| **GKN6 200-100A-0075N** | 200 | 200 | 170 | 846.9 | 840 | 10 | 240 | 340 | 550 | 580 | 446 | 120 | 236.7 |

L1min = Minimum submergence depth for motor without casing with continuous duty S1 (NPSHR permitting)
Lmin = Minimum submergence depth for motor without casing with intermittent duty S3 (NPSHR permitting)

# GKN

## Dimensions and weight

**Duck foot coupling**

**SAK**

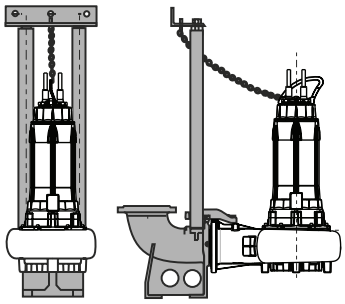

**Submersible pump rest**

**APK**

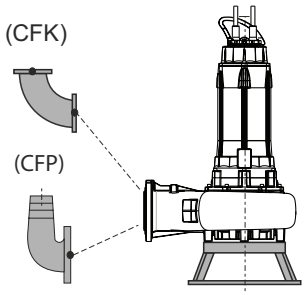


**Dry chamber pump rest**

**APCK**

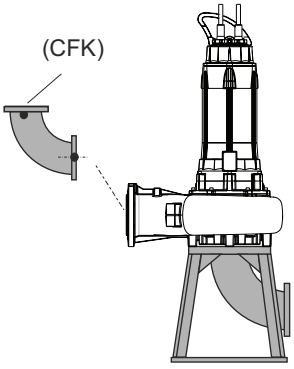


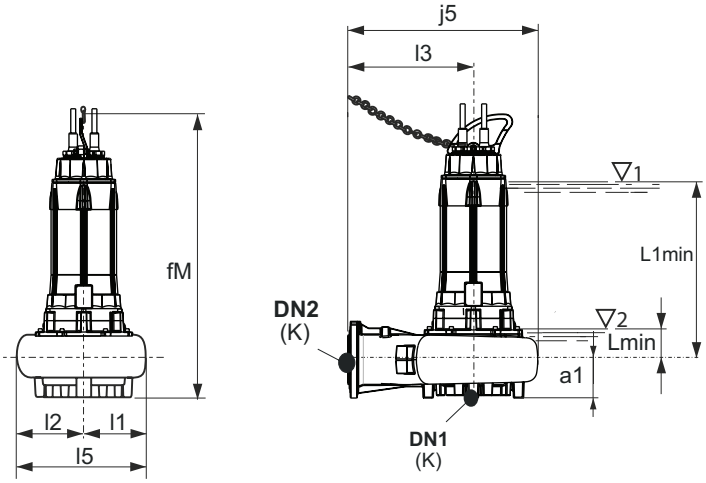


| TYPE | | | mm | | | | | | | | | | Kg |
|---|---|---|---|---|---|---|---|---|---|---|---|---|---|
| | DN1 | DN2 | a1 | fM | j5 | K | l1 | l2 | l3 | l5 | L1min | Lmin | Weight |
| GKN6 200-100L-0110N | 200 | 200 | 170 | 1259 | 835 | 16 | 236 | 334 | 550 | 570 | 804 | 183 | 387.3 |
| GKN6 200-100G-0110N | 200 | 200 | 170 | 1259 | 835 | 16 | 236 | 334 | 550 | 570 | 804 | 183 | 388 |
| GKN6 200-100A-0110N | 200 | 200 | 170 | 1259 | 835 | 16 | 236 | 334 | 550 | 570 | 804 | 183 | 389.7 |

| TYPE | | | mm | | | | | | | | | | Kg |
|---|---|---|---|---|---|---|---|---|---|---|---|---|---|
| | DN1 | DN2 | a1 | fM | j5 | K | l1 | l2 | l3 | l5 | L1min | Lmin | Weight |
| GKN4 200-100L-0165N | 200 | 200 | 170 | 1259 | 835 | 16 | 236 | 334 | 550 | 570 | 804 | 183 | 374.1 |
| GKN4 200-100G-0193N | 200 | 200 | 170 | 1259 | 835 | 16 | 236 | 334 | 550 | 570 | 804 | 183 | 396.6 |
| GKN4 200-100D-0210N | 200 | 200 | 170 | 1259 | 835 | 16 | 236 | 334 | 550 | 570 | 804 | 183 | 421.2 |
| GKN4 200-100A-0260N | 200 | 200 | 170 | 1259 | 835 | 16 | 236 | 334 | 550 | 570 | 804 | 183 | 404.9 |

| TYPE | | | mm | | | | | | | | | | Kg |
|---|---|---|---|---|---|---|---|---|---|---|---|---|---|
| | DN1 | DN2 | a1 | fM | j5 | K | l1 | l2 | l3 | l5 | L1min | Lmin | Weight |
| GKN6 250-115I-0110P | 250 | 250 | 200 | 1305 | 843 | 10 | 282 | 404 | 500 | 686 | 820 | 199 | 412.8 |
| GKN6 250-115D-0150P | 250 | 250 | 200 | 1305 | 843 | 10 | 282 | 404 | 500 | 686 | 820 | 199 | 477.8 |
| GKN6 250-115A-0195P | 250 | 250 | 200 | 1305 | 843 | 10 | 282 | 404 | 500 | 686 | 820 | 199 | 524.3 |

L1min = Minimum submergence depth for motor without casing with continuous duty S1 (NPSHR permitting)
Lmin = Minimum submergence depth for motor without casing with intermittent duty S3 (NPSHR permitting)

# GKN

## Dimensions and weight

**Duck foot coupling** — **SAK**

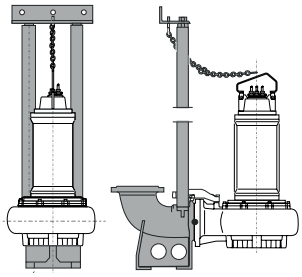

**Submersible pump rest** — **APK**

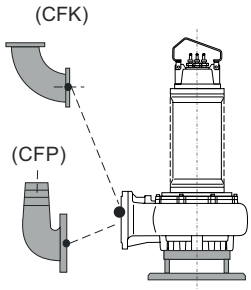


**Dry chamber pump rest** — **APCK**

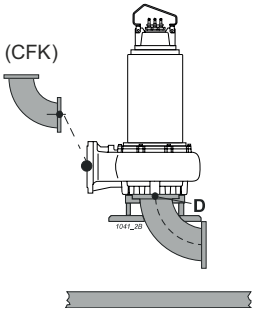


**Dry chamber pump support** — **SOK**

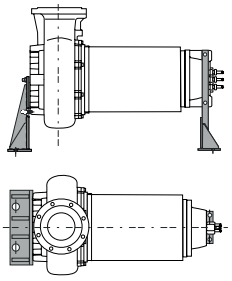

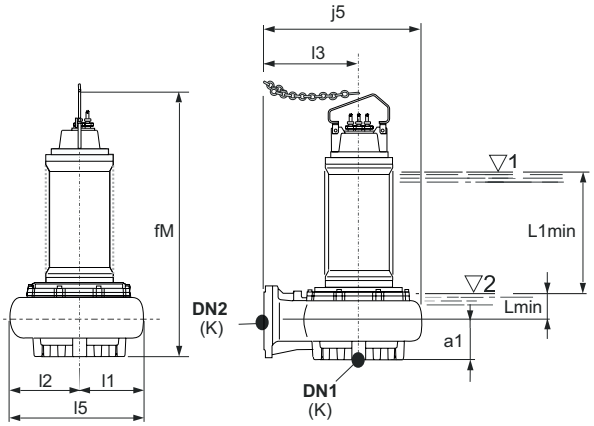


| TYPE | | | mm | | | | | | | | | | Kg |
|---|---|---|---|---|---|---|---|---|---|---|---|---|---|
| | DN1 | DN2 | a1 | fM | j5 | K | l1 | l2 | l3 | l5 | L1min | Lmin | Weight |
| GKN8 300-143D-0170Z | 300 | 300 | 230 | 1599.5 | 1030 | 10 | 340 | 480 | 620 | 820 | 910 | 165 | 656 |
| GKN8 300-143A-0210Z | 300 | 300 | 230 | 1599.5 | 1030 | 10 | 340 | 480 | 620 | 820 | 910 | 165 | 676 |
| GKN8 300-143E-0170Z-R | 300 | 300 | 230 | 1599.5 | 1030 | 10 | 340 | 480 | 620 | 820 | 910 | 165 | 761 |
| GKN8 300-143B-0210Z-R | 300 | 300 | 230 | 1599.5 | 1030 | 10 | 340 | 480 | 620 | 820 | 910 | 165 | 691 |

| TYPE | | | mm | | | | | | | | | | Kg |
|---|---|---|---|---|---|---|---|---|---|---|---|---|---|
| | DN1 | DN2 | a1 | fM | j5 | K | l1 | l2 | l3 | l5 | L1min | Lmin | Weight |
| GKN4 300-143N-0820R | 300 | 300 | 230 | 1696 | 1030 | 10 | 340 | 480 | 620 | 820 | 1040 | 187 | - |
| GKN4 300-143M-0900T | 300 | 300 | 230 | 1653.5 | 1030 | 10 | 340 | 480 | 620 | 820 | 1000 | 155 | 1121 |
| GKN4 300-143I-1000T | 300 | 300 | 230 | 1867 | 1030 | 10 | 340 | 480 | 620 | 820 | 1140 | 155 | 1378 |
| GKN4 300-143G-1200T | 300 | 300 | 230 | 1867 | 1030 | 10 | 340 | 480 | 620 | 820 | 1140 | 155 | 1438 |
| GKN4 300-143D-1450T | 300 | 300 | 230 | 1867 | 1030 | 10 | 340 | 480 | 620 | 820 | 1140 | 155 | 1490 |
| GKN4 300-143A-1800T | 300 | 300 | 230 | 2103 | 1030 | 10 | 340 | 480 | 620 | 820 | 1315 | 155 | 1893 |
| GKN4 300-143Q-0820R-R | 300 | 300 | 230 | 1696 | 1030 | 10 | 340 | 480 | 620 | 820 | 1040 | 187 | - |
| GKN4 300-143P-0900T-R | 300 | 300 | 230 | 1653.5 | 1030 | 10 | 340 | 480 | 620 | 820 | 1000 | 155 | 1141 |
| GKN4 300-143L-1000T-R | 300 | 300 | 230 | 1867 | 1030 | 10 | 340 | 480 | 620 | 820 | 1140 | 155 | 1611 |
| GKN4 300-143H-1200T-R | 300 | 300 | 230 | 1867 | 1030 | 10 | 340 | 480 | 620 | 820 | 1140 | 155 | 1672 |
| GKN4 300-143E-1450T-R | 300 | 300 | 230 | 1867 | 1030 | 10 | 340 | 480 | 620 | 820 | 1140 | 155 | 1724 |
| GKN4 300-143B-1800T-R | 300 | 300 | 230 | 2103 | 1030 | 10 | 340 | 480 | 620 | 820 | 1315 | 155 | 2220 |

| TYPE | | | mm | | | | | | | | | | Kg |
|---|---|---|---|---|---|---|---|---|---|---|---|---|---|
| | DN1 | DN2 | a1 | fM | j5 | K | l1 | l2 | l3 | l5 | L1min | Lmin | Weight |
| GKN6 300-143M-0250R | 300 | 300 | 230 | 1609 | 1030 | 10 | 340 | 480 | 620 | 820 | 953 | 187 | 656 |
| GKN6 300-143G-0340R | 300 | 300 | 230 | 1609 | 1030 | 10 | 340 | 480 | 620 | 820 | 953 | 187 | 676 |
| GKN6 300-143D-0420R | 300 | 300 | 230 | 1663 | 1030 | 10 | 340 | 480 | 620 | 820 | 1007 | 187 | 788 |
| GKN6 300-143A-0510R | 300 | 300 | 230 | 1696 | 1030 | 10 | 340 | 480 | 620 | 820 | 1040 | 187 | 1026 |
| GKN6 300-143N-0250R-R | 300 | 300 | 230 | 1609 | 1030 | 10 | 340 | 480 | 620 | 820 | 953 | 187 | 671 |
| GKN6 300-143H-0340R-R | 300 | 300 | 230 | 1609 | 1030 | 10 | 340 | 480 | 620 | 820 | 953 | 187 | 696 |
| GKN6 300-143E-0420R-R | 300 | 300 | 230 | 1663 | 1030 | 10 | 340 | 480 | 620 | 820 | 1007 | 187 | 804 |
| GKN6 300-143B-0510R-R | 300 | 300 | 230 | 1696 | 1030 | 10 | 340 | 480 | 620 | 820 | 1040 | 187 | 1046 |

L1min = Minimum submergence depth for motor without casing with continuous duty S1 (NPSHR permitting)
Lmin = Minimum submergence depth for motor without casing with intermittent duty S3 (NPSHR permitting)

# GKN

## Dimensions and weight

**Duck foot coupling**

**SAK**

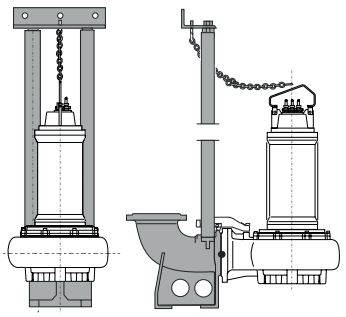

**Submersible pump rest**

**APK**

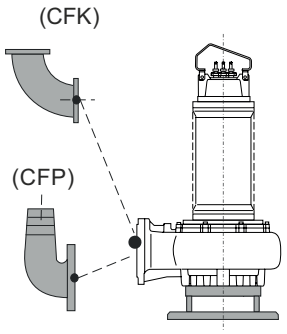


**Dry chamber pump rest**

**APCK**

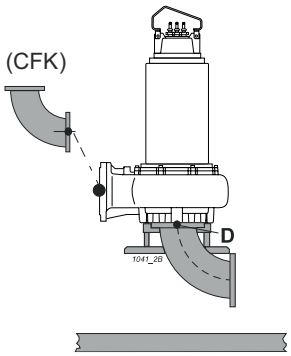


**Dry chamber pump support**

**SOK**

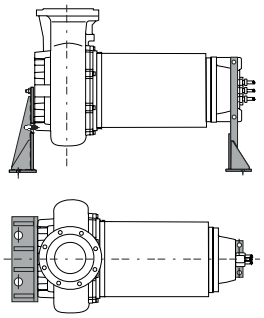

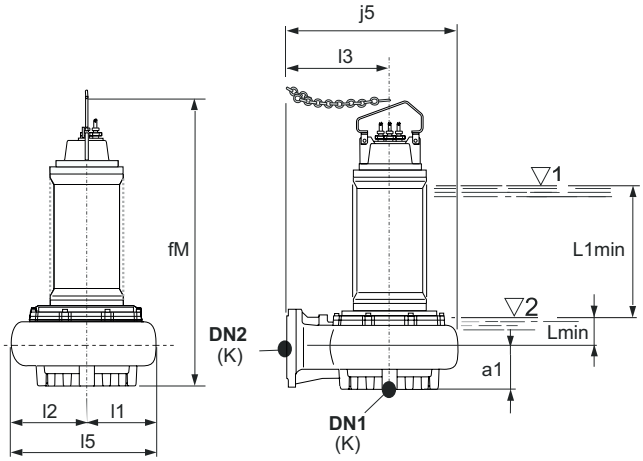


| TYPE | | | mm | | | | | | | | | | Kg |
|---|---|---|---|---|---|---|---|---|---|---|---|---|---|
| | DN1 | DN2 | a1 | fM | j5 | K | l1 | l2 | l3 | l5 | L1min | Lmin | Weight |
| GKN8 350-143S-0210R | 350 | 350 | 268 | 1640.5 | 1170 | 10 | 385 | 550 | 700 | 935 | 997 | 192 | 785 |
| GKN8 350-143O-0250R | 350 | 350 | 268 | 1662.5 | 1170 | 10 | 385 | 550 | 700 | 935 | 912 | 167 | 970 |
| GKN8 350-143G-0340R | 350 | 350 | 268 | 1662.5 | 1170 | 10 | 385 | 550 | 700 | 935 | 912 | 167 | 1070 |
| GKN8 350-143A-0420R | 350 | 350 | 268 | 1672.5 | 1170 | 10 | 385 | 550 | 700 | 935 | 1002 | 192 | 1155 |
| GKN8 350-143T-0210R-R | 350 | 350 | 268 | 1640.5 | 1170 | 10 | 385 | 550 | 700 | 935 | 997 | 192 | 805 |
| GKN8 350-143P-0250R-R | 350 | 350 | 268 | 1662.5 | 1170 | 10 | 385 | 550 | 700 | 935 | 912 | 167 | 990 |
| GKN8 350-143H-0340R-R | 350 | 350 | 268 | 1662.5 | 1170 | 10 | 385 | 550 | 700 | 935 | 912 | 167 | 1025 |
| GKN8 350-143B-0420R-R | 350 | 350 | 268 | 1672.5 | 1170 | 10 | 385 | 550 | 700 | 935 | 1002 | 192 | 1175 |

| TYPE | | | mm | | | | | | | | | | Kg |
|---|---|---|---|---|---|---|---|---|---|---|---|---|---|
| | DN1 | DN2 | a1 | fM | j5 | K | l1 | l2 | l3 | l5 | L1min | Lmin | Weight |
| GKN6 350-164V-0420R | 350 | 350 | 268 | 1704 | 1170 | 10 | 385 | 550 | 700 | 935 | 1010 | 190 | 865 |
| GKN6 350-164S-0510R | 350 | 350 | 268 | 1737 | 1170 | 10 | 385 | 550 | 700 | 935 | 1043 | 190 | 1198 |
| GKN6 350-164W-0420R-R | 350 | 350 | 268 | 1704 | 1170 | 10 | 385 | 550 | 700 | 935 | 1010 | 190 | 880 |
| GKN6 350-164T-0510R-R | 350 | 350 | 268 | 1737 | 1170 | 10 | 385 | 550 | 700 | 935 | 1043 | 190 | 1219 |
| GKN6 350-164O-0600T | 350 | 350 | 268 | 1908 | 1170 | 10 | 385 | 550 | 700 | 935 | 1177 | 192 | 1409 |
| GKN6 350-164G-0820T | 350 | 350 | 268 | 1908 | 1170 | 10 | 385 | 550 | 700 | 935 | 1177 | 192 | 1482 |
| GKN6 350-164A-1000T | 350 | 350 | 268 | 1908 | 1170 | 10 | 385 | 550 | 700 | 935 | 1177 | 192 | 1544 |
| GKN6 350-164P-0600T-R | 350 | 350 | 268 | 1908 | 1170 | 10 | 385 | 550 | 700 | 935 | 1177 | 192 | 1642 |
| GKN6 350-164H-0820T-R | 350 | 350 | 268 | 1908 | 1170 | 10 | 385 | 550 | 700 | 935 | 1177 | 192 | 1715 |
| GKN6 350-164B-1000T-R | 350 | 350 | 268 | 1908 | 1170 | 10 | 385 | 550 | 700 | 935 | 1177 | 192 | 1778 |

L1min = Minimum submergence depth for motor without casing with continuous duty S1 (NPSHR permitting)
Lmin = Minimum submergence depth for motor without casing with intermittent duty S3 (NPSHR permitting)

# GKA

calpeda®

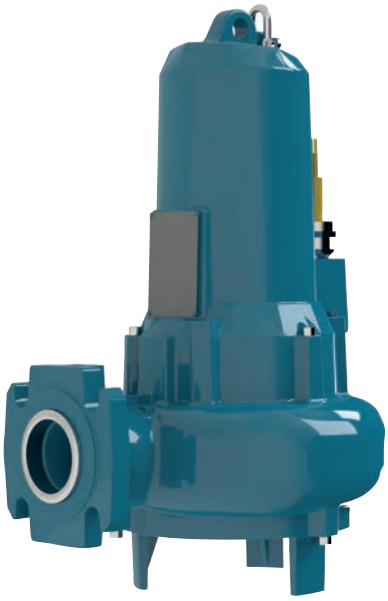

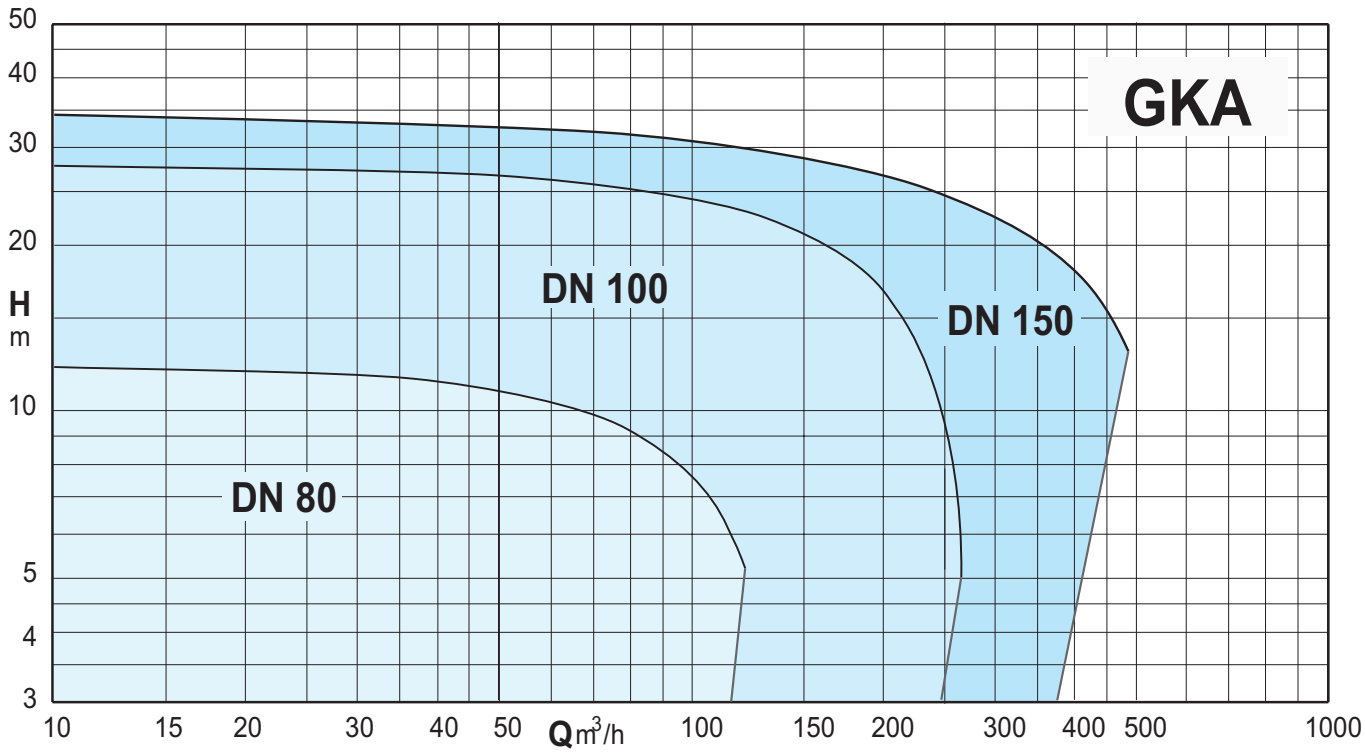


# Submersible pumps with open twin blade impeller

# GKA

calpeda®

## Construction

Submersible pumps with open twin blade impeller
It offers reliability against clogging and features and a good resistance to wear, low mechanical action on the fluid, high hydraulic efficiency.
Low vibrations thanks to the dynamically balanced impeller.
Delivery port DN 80-100-150.

## Applications

Particularly suitable for clean water, water containing solid and fibrous solids, cloacal water, sewage and sludge.
Particularly suitable for the emptying of sewage from cesspits or primary collection tanks or industrial waste water.
Solid passage from 34 to 60 mm

## Operating conditions

Liquid temperature: from 0°C to +40°C.
Maximum immersion depth: 20m (with cable of suitable length).
Maximum working pressure: 80 m.w.c.
pH of the liquid to be lifted: 4 ÷ 10
Continuous service (with water at minimum immersion level).

## Materials

Pump casing: cast iron EN-GJL250 UNI-EN 1561-11
Impeller: cast iron EN-GJL250 UNI-EN 1561-11
Motor casing: cast iron EN-GJL250 UNI-EN 1561-11 / EN-GJL450 UNI-EN 1561-11
Shaft: stainless steel X20Cr13 (AISI420)
Pump mechanical seal with flange size H - L - N
- motor side: graphite/ceramic
- pump side: silicon/ceramic carbide

## Motor

4 poles induction, 50Hz
Three-phase version: 400V ± 10%, up to 4.8kW
400/690V ± 10% from 5.8kW
Isolation class: H
Degree of protection: IP 68
Max number of starts per hour:
- 20 up to 5 kW
- 15 up to 10 kW
- 10 for higher powers

Cable: length 10m
Direction of rotation: clockwise top view
Motor suitable for operation with frequency converter.

## Special features on request

(Check feasibility according to the model with our Technical Sales Office).
ATEX versions complying with EN60079-0 - EN60079-1 type I M2 Ex db h I Mb, II 2G Ex db h IIB T4 Gb.
Impeller in stainless steel AISI 316 or bronze.
Bronze impeller seat ring.
Cable length up to 40 m
Other mechanical seal.
Higher or lower liquid or ambient temperatures.
Ceramic coating.
Internal anti-erosion coating, external anti-corrosion.

## Designation

GKA4 100-38A-0125L-X
GK = Series
A = open twin blade impeller
4 = Number of poles
100 = Delivery port diameter in mm
38 = Free passage in mm
A = Impeller trim
0125 = Motor size (P2 = 12,5 kW)
L = Size of electric motor flanging
X = Versione ATEX

## Technical data

| TYPE | Version | Dry chamber version | | Probes | | Cable | Class | Duck foot coupling | Submersible pump rest | Dry chamber pump rest | Dry chamber pump support |
|---|---|---|---|---|---|---|---|---|---|---|---|
| | ATEX | Vertical | Horizontal | thermal | conductivity | NSSHOU-J | Isolation | | | | |
| GKA4 80-34L-0016H | o | # | # | • | • | • | H / IE3 | SAK 80-80-2 | APK 80 | APCK 80 | SOK80/N3 |
| GKA4 80-34G-0016H | o | # | # | • | • | • | H / IE3 | SAK 80-80-2 | APK 80 | APCK 80 | SOK80/N3 |
| GKA4 80-34D-0021H | o | # | # | • | • | • | H / IE3 | SAK 80-80-2 | APK 80 | APCK 80 | SOK80/N3 |
| GKA4 80-34A-0029H | o | # | # | • | • | • | H / IE3 | SAK 80-80-2 | APK 80 | APCK 80 | SOK80/N3 |
| GKA4 100-38L-0075L | o | # | # | • | • | • | H / IE3 | SAK 100-100-2A | APK 100 | APCK 100 | SOK100/N3 |
| GKA4100-38G-0105L | o | # | # | • | • | • | H / IE3 | SAK 100-100-2A | APK 100 | APCK 100 | SOK100/N3 |
| GKA4 100-38D-0125L | o | # | # | • | • | • | H / IE3 | SAK 100-100-2A | APK 100 | APCK 100 | SOK100/N3 |
| GKA4 100-38A-0125L | o | # | # | • | • | • | H / IE3 | SAK 100-100-2A | APK 100 | APCK 100 | SOK100/N3 |
| GKA4 100-41L-0029H | o | # | # | • | • | • | H / IE3 | SAK 100-100-2A | APK 100 | APCK 100 | SOK100/N3 |
| GKA4 100-41G-0037H | o | # | # | • | • | • | H / IE3 | SAK 100-100-2A | APK 100 | APCK 100 | SOK100/N3 |
| GKA4 100-41D-0046H | o | # | # | • | • | • | H / IE3 | SAK 100-100-2A | APK 100 | APCK 100 | SOK100/N3 |
| GKA4 100-41A-0058H | o | # | # | • | • | • | H / IE3 | SAK 100-100-2A | APK 100 | APCK 100 | SOK100/N3 |
| GKA4 100-45L-0165N | o | # | – | • | • | • | H / IE3 | SAK 100-100-2 | APK 150 | APCK 150A | - |
| GKA4 100-45G-0193N | o | # | – | • | • | • | H / IE3 | SAK 100-100-2 | APK 150 | APCK 150A | - |
| GKA4 100-45D-0210N | o | # | – | • | • | • | H / IE3 | SAK 100-100-2 | APK 150 | APCK 150A | - |
| GKA4 100-45A-0260N | o | # | – | • | • | • | H / IE3 | SAK 100-100-2 | APK 150 | APCK 150A | - |
| GKA4 150-51P-0021H | o | # | # | • | • | • | H / IE3 | SAK 150-150-2 | APK 150 | APCK 150A | SOK150/N3 |
| GKA4 150-51L-0029H | o | # | # | • | • | • | H / IE3 | SAK 150-150-2 | APK 150 | APCK 150A | SOK150/N3 |
| GKA4 150-51G-0037H | o | # | # | • | • | • | H / IE3 | SAK 150-150-2 | APK 150 | APCK 150A | SOK150/N3 |
| GKA4 150-51D-0046H | o | # | # | • | • | • | H / IE3 | SAK 150-150-2 | APK 150 | APCK 150A | SOK150/N3 |
| GKA4 150-51A-0058H | o | # | # | • | • | • | H / IE3 | SAK 150-150-2 | APK 150 | APCK 150A | SOK150/N3 |
| GKA4 150-60L-0165N | o | # | – | • | • | • | H / IE3 | SAK 150-200-3 | APK 150 | APCK 150A | - |
| GKA4 150-60G-0193N | o | # | – | • | • | • | H / IE3 | SAK 150-200-3 | APK 150 | APCK 150A | - |
| GKA4 150-60D-0210N | o | # | – | • | • | • | H / IE3 | SAK 150-200-3 | APK 150 | APCK 150A | - |
| GKA4 150-60A-0260N | o | # | – | • | • | • | H / IE3 | SAK 150-200-3 | APK 150 | APCK 150A | - |

• = Standard
- = Not present
o = Optional
# = Version with oil chamber
$ = Version with cooling jacket
# = In case of operation in a dry chamber or with a low level of the pumped liquid, it is necessary to introduce the cooling oil according to the quantities indicated in the use and maintenance manual

# GKA

calpeda®

## Performance

### n ≈ 1450 1/min

| Model | 400V | P2 | Q = Flow | | | | | | | | | | | | | | |
|---|---|---|---|---|---|---|---|---|---|---|---|---|---|---|---|---|---|
| | | | m³/h | 0 | 21,5 | 25,2 | 28,8 | 32,4 | 36 | 45 | 54 | 63 | 72 | 81 | 90 | 99 | 108 |
| | | | l/min | | 358 | 420 | 480 | 540 | 600 | 750 | 900 | 1050 | 1200 | 1350 | 1500 | 1650 | 1800 |
| | A | kW | H (m) = Total head | | | | | | | | | | | | | | |
| GKA4 80-34L-0016H | 3,4 | 1.6 | | 10 | 8,2 | 7,8 | 7,5 | 7,2 | 6,9 | 6,2 | 5,5 | 4,8 | 3,9 | - | - | - | - |
| GKA4 80-34G-0016H | 3,4 | 1.6 | | 11,8 | 9,9 | 9,6 | 9,3 | 9 | 8,7 | 8 | 7,3 | 6,6 | 5,8 | 5 | 4,2 | - | - |
| GKA4 80-34D-0021H | 5 | 2.1 | | 13 | - | - | 10,5 | 10,2 | 9,9 | 9,1 | 8,3 | 7,6 | 6,9 | 6,1 | 5,3 | 4,4 | - |
| GKA4 80-34A-0029H | 6,1 | 2.9 | | 15 | - | - | - | - | 11,8 | 11,2 | 10,5 | 9,8 | 9 | 8,3 | 7,4 | 6,5 | 5,6 |

| Model | 400V | 690V | P2 | Q = Flow | | | | | | | | | | | | | | |
|---|---|---|---|---|---|---|---|---|---|---|---|---|---|---|---|---|---|---|
| | | | | m³/h | 0 | 14,4 | 18 | 36 | 54 | 72 | 90 | 108 | 126 | 144 | 162 | 180 | 216 | 252 |
| | | | | l/min | | 240 | 300 | 600 | 900 | 1200 | 1500 | 1800 | 2100 | 2400 | 2700 | 3000 | 3600 | 4200 |
| | A | | kW | H (m) = Total head | | | | | | | | | | | | | | |
| GKA4 100-38L-0075L | 15,3 | 8,8 | 7,5 | | 21,7 | 20,9 | 20,7 | 19,7 | 18,7 | 17,5 | 16,3 | 15 | 13,6 | 12,1 | 10,5 | 8,6 | - | - |
| GKA4100-38G-0105L | 20 | 11,5 | 10,5 | | 25 | 23,9 | 23,6 | 22,4 | 21,3 | 20,2 | 19,1 | 17,9 | 16,6 | 15,3 | 13,7 | 11,9 | 7,8 | - |
| GKA4 100-38D-0125L | 24 | 13,9 | 12,5 | | 28,4 | 27,3 | 27 | 25,6 | 24,3 | 23,1 | 21,9 | 20,7 | 19,5 | 18,1 | 16,6 | 14,9 | 11 | 6,4 |
| GKA4 100-38A-0125L | 24 | 13,9 | 12,5 | | 30,9 | 29,6 | 29,3 | 27,9 | 26,7 | 25,4 | 24,2 | 22,9 | 21,6 | 20,2 | 18,9 | 17,4 | 13,9 | - |

| Model | 400V | 690V | P2 | Q = Flow | | | | | | | | | | |
|---|---|---|---|---|---|---|---|---|---|---|---|---|---|---|
| | | | | m³/h | 0 | 54 | 72 | 90 | 108 | 126 | 144 | 162 | 180 | 198 |
| | | | | l/min | | 900 | 1200 | 1500 | 1800 | 2100 | 2400 | 2700 | 3000 | 3300 |
| | A | | kW | H (m) = Total head | | | | | | | | | | |
| GKA4 100-41L-0029H | 6,1 | - | - | 2.9 | | 14,1 | 10,4 | 9,3 | 8,2 | 6,9 | 5,7 | 4,3 | - | - | - |
| GKA4 100-41G-0037H | 7,7 | - | - | 3.7 | | 15,9 | 12 | 10,9 | 9,8 | 8,6 | 7,4 | 6,1 | 4,7 | - | - |
| GKA4 100-41D-0046H | 9,5 | - | - | 4.6 | | 17,4 | 13,5 | 12,5 | 11,4 | 10,3 | 9,2 | 7,9 | 6,5 | 5,1 | - |
| GKA4 100-41A-0058H | - | 11,9 | 6,9 | 5.8 | | 20,9 | 16,2 | 15,1 | 13,9 | 12,8 | 11,7 | 10,4 | 9 | 7,5 | 6,1 |

| Model | 400V | 690V | P2 | Q = Flow | | | | | | | | | | | | | | | |
|---|---|---|---|---|---|---|---|---|---|---|---|---|---|---|---|---|---|---|---|
| | | | | m³/h | 0 | 18 | 36 | 54 | 72 | 90 | 108 | 126 | 144 | 162 | 180 | 216 | 252 | 288 | 324 |
| | | | | l/min | | 300 | 600 | 900 | 1200 | 1500 | 1800 | 2100 | 2400 | 2700 | 3000 | 3600 | 4200 | 4800 | 5400 |
| | A | | kW | H (m) = Total head | | | | | | | | | | | | | | | |
| GKA4 100-45L-0165N | 31,2 | 18 | 16,5 | | 30 | 29 | 28,1 | 27,3 | 26,4 | 25,4 | 24,4 | 23,3 | 22,1 | 20,9 | 19,7 | 17,4 | 15,1 | - | - |
| GKA4 100-45G-0193N | 38,8 | 22,4 | 19,3 | | 33,7 | 32,8 | 31,9 | 31 | 30,1 | 29,1 | 28,1 | 27 | 25,9 | 24,8 | 23,6 | 21,3 | 18,9 | - | - |
| GKA4 100-45D-0210N | 39 | 22,5 | 21 | | 37,2 | 36,2 | 35,2 | 34,2 | 33,3 | 32,4 | 31,4 | 30,4 | 29,3 | 28,2 | 26,9 | 24,3 | 21,6 | - | - |
| GKA4 100-45A-0260N | 47,2 | 27,3 | 26 | | 40 | 38,8 | 37,8 | 36,8 | 35,9 | 34,9 | 33,9 | 32,8 | 31,6 | 30,4 | 29,1 | 26,6 | 23,9 | 21,3 | 18,6 |

| Model | 400V | 690V | P2 | Q = Flow | | | | | | | | | | | | | | |
|---|---|---|---|---|---|---|---|---|---|---|---|---|---|---|---|---|---|---|
| | | | | m³/h | 0 | 28,8 | 36 | 54 | 72 | 90 | 108 | 126 | 144 | 162 | 180 | 216 | 252 |
| | | | | l/min | | 480 | 600 | 900 | 1200 | 1500 | 1800 | 2100 | 2400 | 2700 | 3000 | 3600 | 4200 |
| | A | | kW | H (m) = Total head | | | | | | | | | | | | | |
| GKA4 150-51P-0021H | 5 | - | - | 2.1 | | 9,6 | 8,3 | 8 | 7,4 | 6,8 | 6,1 | 5,3 | 4,5 | 3,7 | 2,9 | - | - | - |
| GKA4 150-51L-0029H | 6,1 | - | - | 2.9 | | 11,4 | - | 9,8 | 9,2 | 8,5 | 7,9 | 7,2 | 6,4 | 5,6 | 4,8 | 4 | - | - |
| GKA4 150-51G-0037H | 7,7 | - | - | 3.7 | | 12,9 | - | 11,1 | 10,5 | 9,8 | 9,1 | 8,4 | 7,6 | 6,8 | 6 | 5,1 | - | - |
| GKA4 150-51D-0046H | 9,5 | - | - | 4.6 | | 15,1 | - | - | 12,2 | 11,5 | 10,9 | 10,2 | 9,4 | 8,7 | 7,9 | 7 | 5,3 | - |
| GKA4 150-51A-0058H | - | 11,9 | 6,9 | 5.8 | | 16,8 | - | - | 13,9 | 13,3 | 12,6 | 11,9 | 11,2 | 10,5 | 9,7 | 8,9 | 7,1 | 5,2 |

| Model | 400V | 690V | P2 | Q = Flow | | | | | | | | | | | | | | | | | |
|---|---|---|---|---|---|---|---|---|---|---|---|---|---|---|---|---|---|---|---|---|---|
| | | | | m³/h | 0 | 25,2 | 36 | 54 | 72 | 90 | 108 | 126 | 144 | 162 | 180 | 216 | 252 | 288 | 324 | 360 | 450 |
| | | | | l/min | | 420 | 600 | 900 | 1200 | 1500 | 1800 | 2100 | 2400 | 2700 | 3000 | 3600 | 4200 | 4800 | 5400 | 6000 | 7500 |
| | A | | kW | H (m) = Total head | | | | | | | | | | | | | | | | | |
| GKA4 150-60L-0165N | 31,2 | 18 | 16,5 | | 26,2 | 24,6 | 24 | 23 | 22,1 | 21,3 | 20,6 | 19,9 | 19,2 | 18,6 | 18 | 16,7 | 15,3 | 13,9 | 12,4 | 10,9 | 7,4 |
| GKA4 150-60G-0193N | 38,8 | 22,4 | 19,3 | | 30,1 | 28,5 | 27,9 | 26,9 | 25,9 | 25,1 | 24,2 | 23,4 | 22,6 | 21,9 | 21,1 | 19,7 | 18,3 | 16,8 | 15,3 | 13,7 | 9,7 |
| GKA4 150-60D-0210N | 39 | 22,5 | 21 | | 32,7 | 31 | 30,4 | 29,3 | 28,3 | 27,4 | 26,5 | 25,6 | 24,8 | 24 | 23,3 | 21,9 | 20,5 | 19 | 17,5 | 15,9 | - |
| GKA4 150-60A-0260N | 47,2 | 27,3 | 26 | | 36,9 | 35,1 | 34,4 | 33,3 | 32,3 | 31,3 | 30,4 | 29,6 | 28,8 | 28 | 27,2 | 25,7 | 24,2 | 22,7 | 21,1 | 19,5 | 14,7 |

# GKA

## Characteristic curves

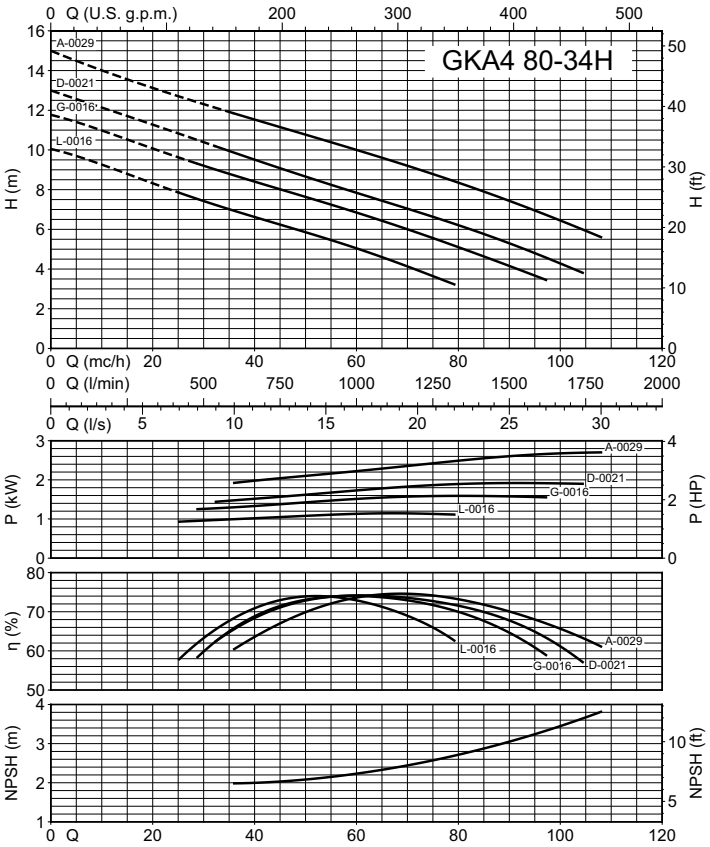


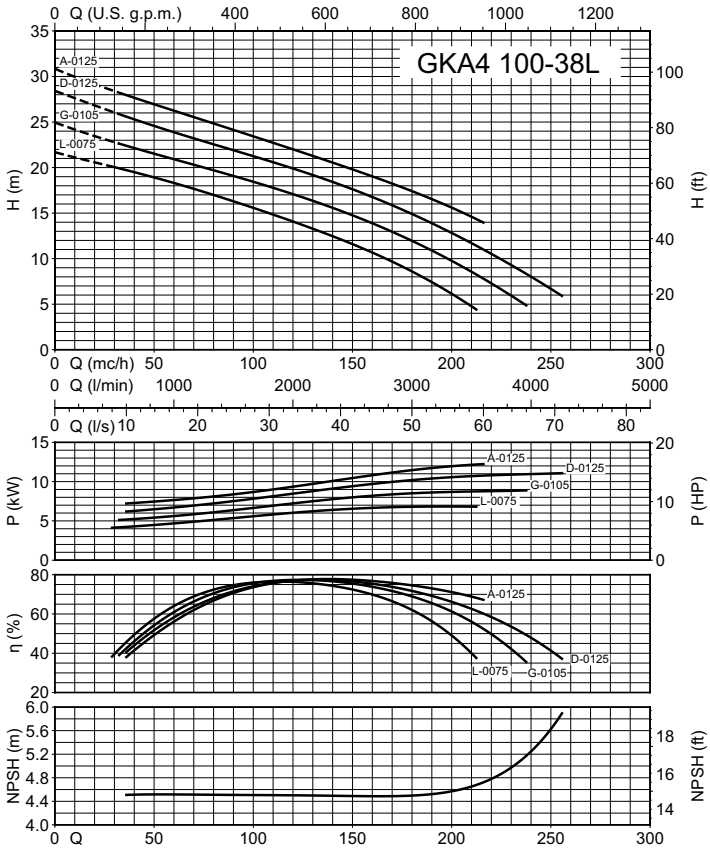


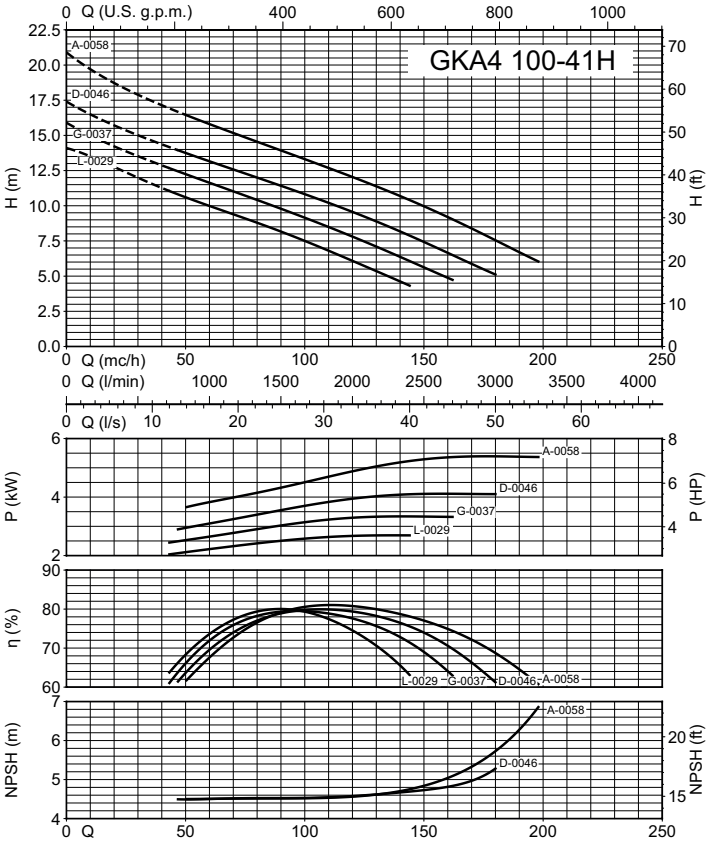


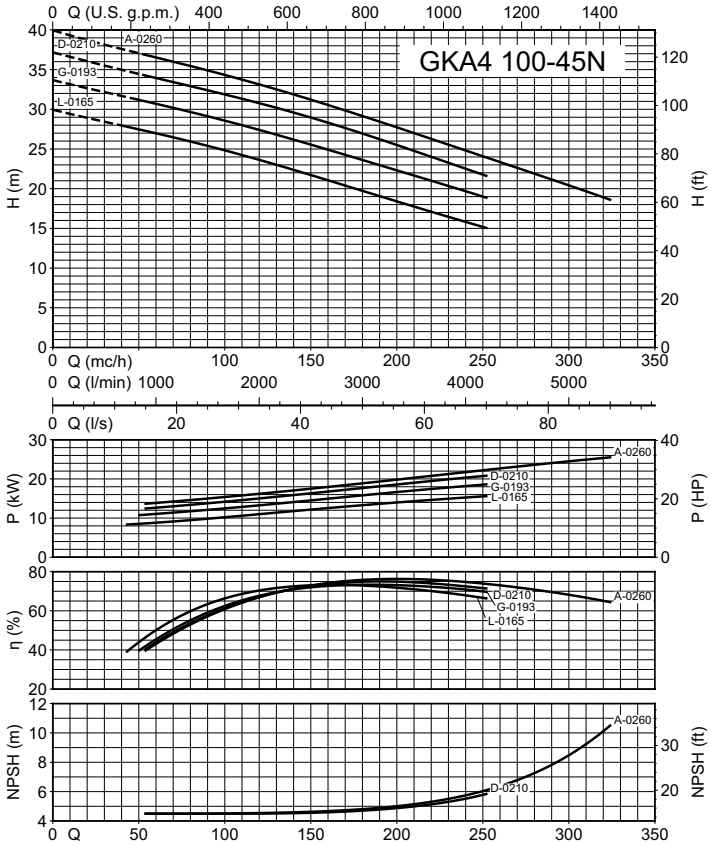

# GKA

## Characteristic curves

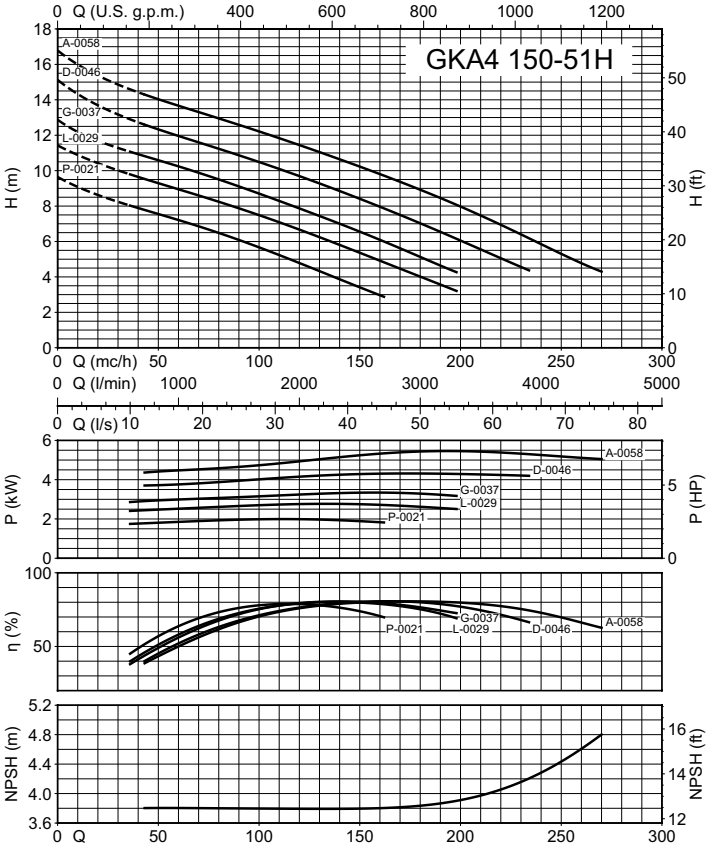


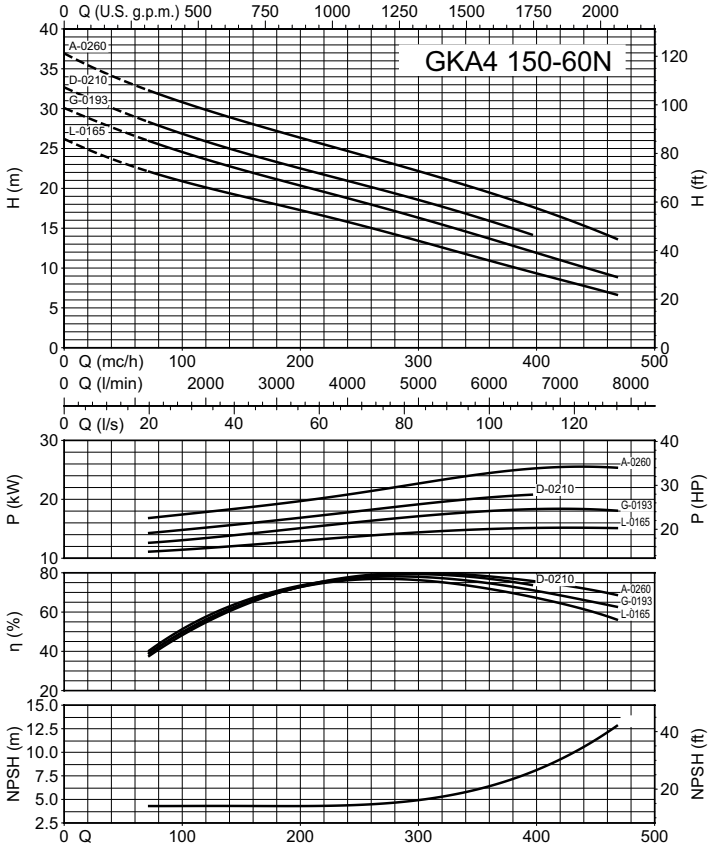

# GKA

## Dimensions and weight

**Duck foot coupling**

**SAK**

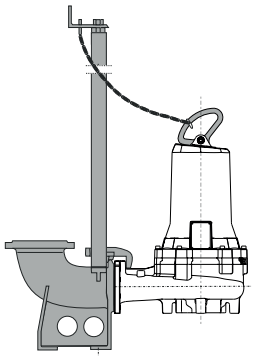

**Submersible pump rest**

**APK**

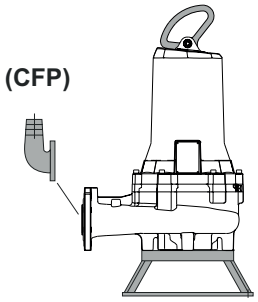


**Dry chamber pump rest**

**APCK**

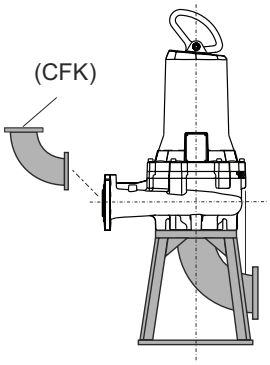


**Dry chamber pump support**

**SOK**

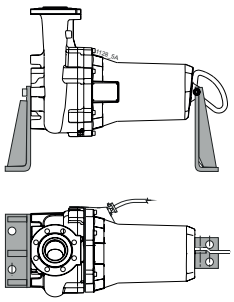

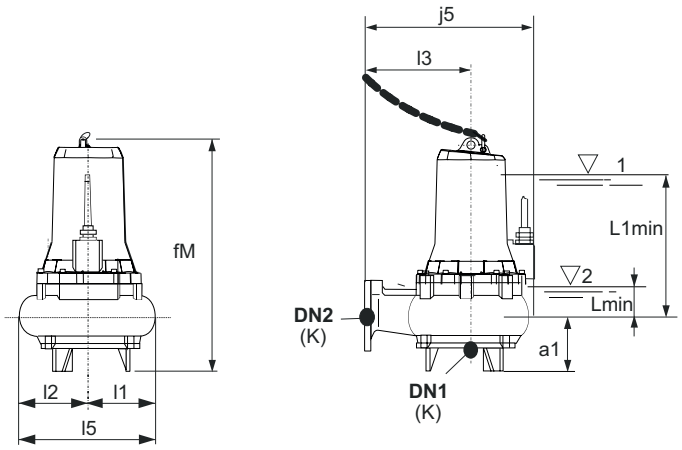


| TYPE | | | mm | | | | | | | | | |
|---|---|---|---|---|---|---|---|---|---|---|---|---|
| | DN1 | DN2 | a1 | fM | j5 | K | l1 | l2 | l3 | l5 | L1min | Lmin |
| GKA4 80-34L-0016H | 80 | 80 | 98 | 615.3 | 416 | 16 | 204.5 | 190.5 | 245 | 395 | 288 | 66 |
| GKA4 80-34G-0016H | 80 | 80 | 98 | 615.3 | 416 | 16 | 204.5 | 190.5 | 245 | 395 | 288 | 66 |
| GKA4 80-34D-0021H | 80 | 80 | 98 | 615.3 | 416 | 16 | 204.5 | 190.5 | 245 | 395 | 355 | 65 |
| GKA4 80-34A-0029H | 80 | 80 | 98 | 615.3 | 416 | 16 | 204.5 | 190.5 | 245 | 395 | 288 | 66 |

L1min = Minimum submergence depth for motor without casing with continuous duty S1 (NPSHR permitting)
Lmin = Minimum submergence depth for motor without casing with intermittent duty S3 (NPSHR permitting)

# GKA

## Dimensions and weight

**Duck foot coupling**

**SAK**

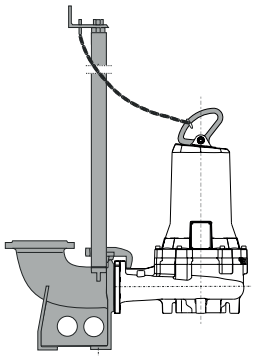

**Submersible pump rest**

**APK**

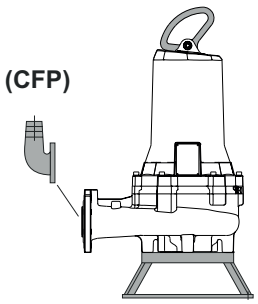


**Dry chamber pump rest**

**APCK**

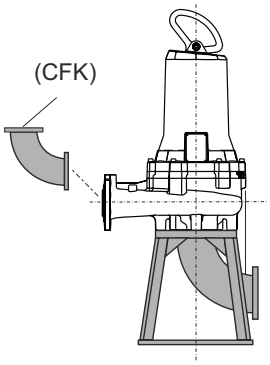


**Dry chamber pump support**

**SOK**

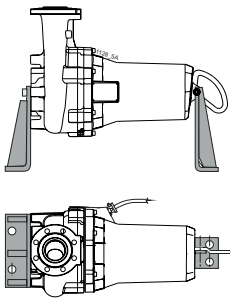

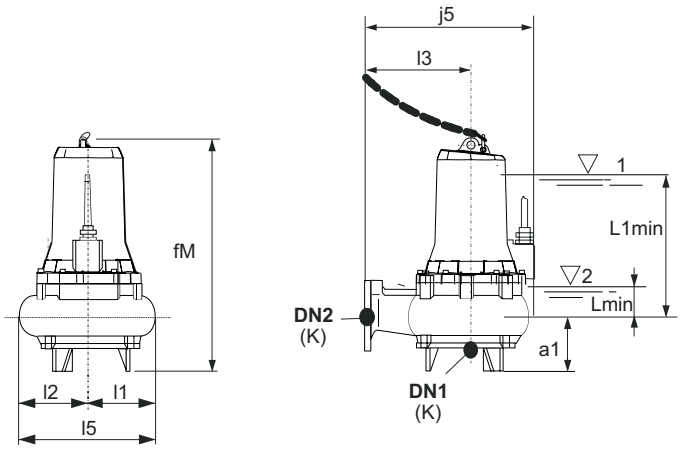


| TYPE | | | mm | | | | | | | | | |
|---|---|---|---|---|---|---|---|---|---|---|---|---|
| | DN1 | DN2 | a1 | fM | j5 | K | l1 | l2 | l3 | l5 | L1min | Lmin |
| GKA4 100-38L-0075L | 100 | 100 | 113.2 | 763.6 | 530 | 16 | 236.5 | 228 | 320 | 464.5 | 420.4 | 69.4 |
| GKA4100-38G-0105L | 100 | 100 | 113.2 | 766 | 530 | 16 | 236.5 | 228 | 320 | 464.5 | 420.4 | 69.4 |
| GKA4 100-38D-0125L | 100 | 100 | 113.2 | 766 | 530 | 16 | 236.5 | 228 | 320 | 464.5 | 420.4 | 69.4 |
| GKA4 100-38A-0125L | 100 | 100 | 113.2 | 766 | 530 | 16 | 236.5 | 228 | 320 | 464.5 | 420.4 | 69.4 |
| GKA4 100-41L-0029H | 100 | 100 | 116 | 635.3 | 492 | 16 | 204.5 | 213.3 | 300 | 402.5 | 289 | 69 |
| GKA4 100-41G-0037H | 100 | 100 | 116 | 704.4 | 492 | 16 | 221 | 213.3 | 300 | 419 | 324 | 69 |
| GKA4 100-41D-0046H | 100 | 100 | 116 | 704.4 | 492 | 16 | 221 | 213.3 | 300 | 419 | 324 | 69 |
| GKA4 100-41A-0058H | 100 | 100 | 116 | 704.4 | 492 | 16 | 221 | 213.3 | 300 | 434.3 | 324 | 69 |
| GKA4 150-51P-0021H | 150 | 150 | 132 | 659.3 | 570 | 16 | 224.2 | 241.2 | 344 | 465.4 | 387.5 | 167.5 |
| GKA4 150-51L-0029H | 150 | 150 | 132 | 659.3 | 570 | 16 | 224.2 | 241.2 | 344 | 465.4 | 297.5 | 77.5 |
| GKA4 150-51G-0037H | 150 | 150 | 132 | 728.4 | 570 | 16 | 224.2 | 241.2 | 344 | 465.4 | 332.5 | 77.5 |
| GKA4 150-51D-0046H | 150 | 150 | 132 | 728.4 | 570 | 16 | 224.2 | 241.2 | 344 | 465.4 | 332.5 | 77.5 |
| GKA4 150-51A-0058H | 150 | 150 | 132 | 728.4 | 570 | 16 | 224.2 | 241.2 | 344 | 465.4 | 332.5 | 77.5 |

L1min = Minimum submergence depth for motor without casing with continuous duty S1 (NPSHR permitting)
Lmin = Minimum submergence depth for motor without casing with intermittent duty S3 (NPSHR permitting)

# GKA

## Dimensions and weight

**Duck foot coupling**

**SAK**

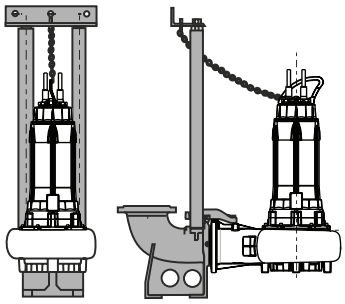

**Submersible pump rest**

**APK**

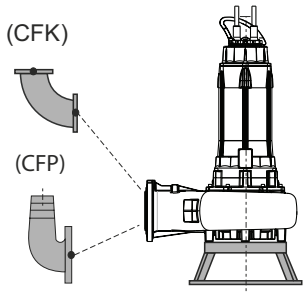


**Dry chamber pump rest**

**APCK**

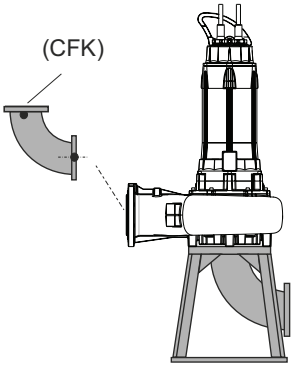


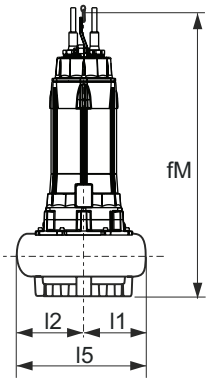


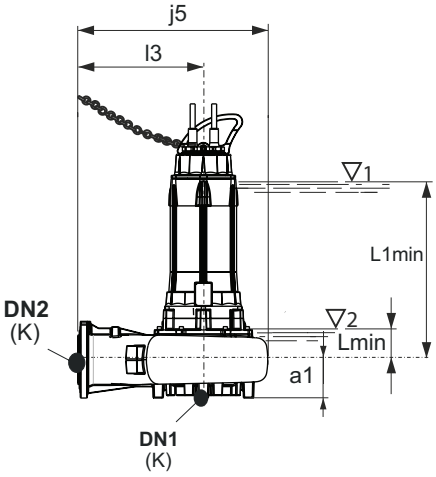


| TYPE | | | mm | | | | | | | | | |
|---|---|---|---|---|---|---|---|---|---|---|---|---|
| | DN1 | DN2 | a1 | fM | j5 | K | l1 | l2 | l3 | l5 | L1min | Lmin |
| **GKA4 100-45L-0165N** | 150 | 100 | 122.8 | 1184.2 | 621.3 | 16 | 226.8 | 259.2 | 380 | 486 | 776.4 | 155.4 |
| **GKA4 100-45G-0193N** | 150 | 100 | 122.8 | 1184.2 | 621.3 | 16 | 226.8 | 259.2 | 380 | 486 | 776.4 | 155.4 |
| **GKA4 100-45D-0210N** | 150 | 100 | 122.8 | 1184.2 | 621.3 | 16 | 226.8 | 259.2 | 380 | 486 | 776.4 | 155.4 |
| **GKA4 100-45A-0260N** | 150 | 100 | 122.8 | 1184.2 | 621.3 | 16 | 226.8 | 259.2 | 380 | 486 | 776.4 | 155.4 |
| **GKA4 150-60L-0165N** | 150 | 150 | 138 | 1208.5 | 662.3 | 16 | 228.8 | 286.2 | 405 | 515 | 785.5 | 164.5 |
| **GKA4 150-60G-0193N** | 150 | 150 | 138 | 1208.5 | 662.3 | 16 | 228.8 | 286.2 | 405 | 515 | 785.5 | 164.5 |
| **GKA4 150-60D-0210N** | 150 | 150 | 138 | 1208.5 | 662.3 | 16 | 228.8 | 286.2 | 405 | 515 | 785.5 | 164.5 |
| **GKA4 150-60A-0260N** | 150 | 150 | 138 | 1208.5 | 662.3 | 16 | 228.8 | 286.2 | 405 | 515 | 785.5 | 164.5 |

L1min = Minimum submergence depth for motor without casing with continuous duty S1 (NPSHR permitting)
Lmin = Minimum submergence depth for motor without casing with intermittent duty S3 (NPSHR permitting)

# GKG

calpeda®

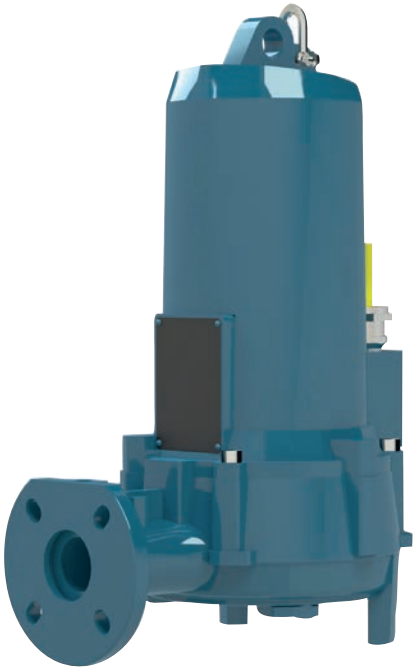

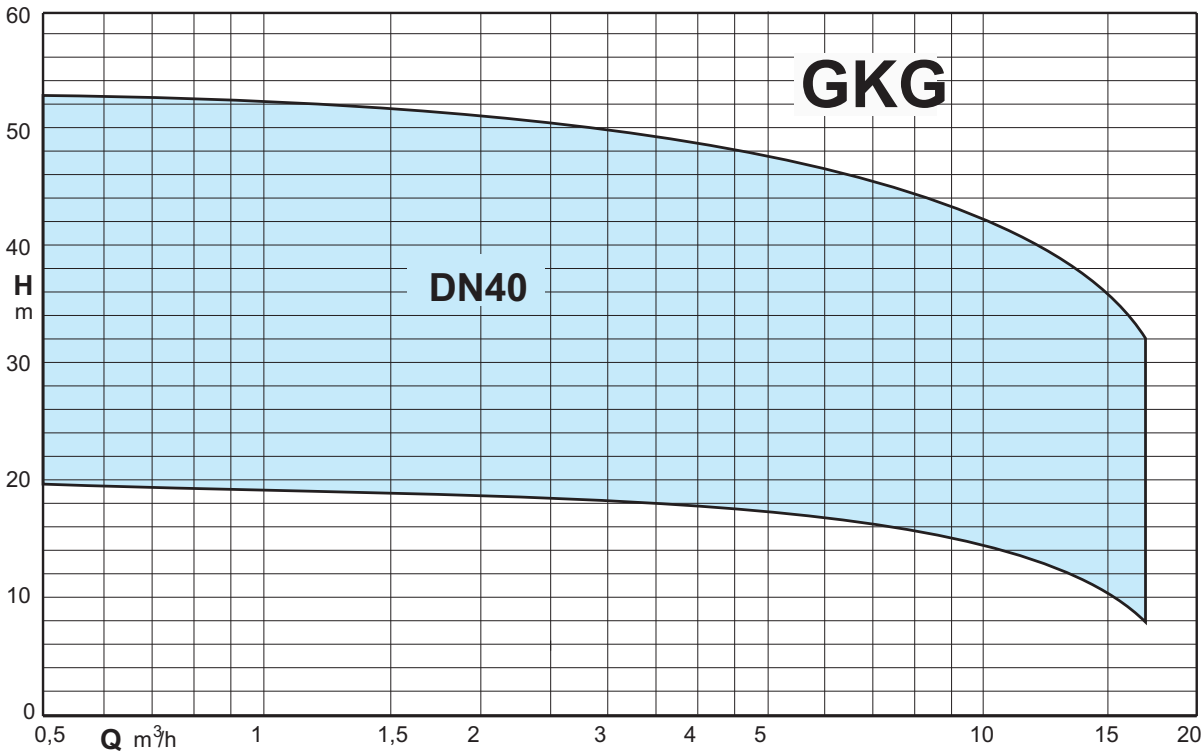


# Submersible pumps with high power grinder

# GKG

calpeda®

## Construction

Submersible pumps with high cutting power shredder system.
Made of very hard stainless steel, the shape of the shredder ensures long-life and fade-free shredding capacity.
No particular tools are required to replace this part.
Delivery port DN 40.

## Applications

To move water containing long filamentary materials, paper or textile material.
They are particularly suitable for the disposal of waste water in domestic, residential and industrial use.
Solid passage 4 mm.

## Operating conditions

Liquid temperature up to 40°C.
Maximum immersion depth: 20m (with cable of suitable length).
Maximum working pressure: 80 m.w.c.
pH of the liquid to be lifted: 6 ÷ 10
Continuous service (with water at minimum immersion level).

## Materials

Pump casing: cast iron EN-GJL250 UNI-EN 1561-11
Impeller: cast iron EN-GJL250 UNI-EN 1561-11
Motor casing: cast iron EN-GJL250 UNI-EN 1561-11
Shaft: stainless steel X20Cr13 (AISI420)
Motor side mechanical seal: graphite/ceramic
Pump side mechanical seal: silicon carbide/ceramic

## Motor

Induction motor 2.4 poles, 50Hz
Three-phase version: 400V ± 10%up to 4.8 kW
400/690V ± 10%from 5.8 kW
Isolation class: H
Degree of protection: IP 68
Max number of starts per hour: 20 at regular intervals
Cable: length 10m
Direction of rotation: clockwise top view
Motor suitable for operation with frequency converter.

## Special features on request

(Check feasibility according to the model with our Technical Sales Office).
ATEX versions complying with EN60079-0 - EN60079-1 type I M2 Ex db h I Mb, II 2G Ex db h IIB T4 Gb.
Impeller in stainless steel AISI 316 or bronze.
Bronze impeller seat ring.
Cable length up to 40 m
Other mechanical seal.
Higher or lower liquid or ambient temperatures.
Ceramic coating.
Internal anti-erosion coating, external anti-corrosion.

## Designation

GKG2 40-4T-0020F-X
GK = Series
G = Impeller with shredder system
2 = Number of poles
40 = Delivery port diameter in mm
4 = Free passage in mm
T = Impeller trim
0020 = Motor size (P2 = 2 kW)
F = Size of electric motor flanging
X = Versione ATEX

## Technical data

| TYPE | Version | Dry chamber version | | Probes | | Cable | | Class | Duck foot coupling | Duck foot coupling | Threaded bend |
|---|---|---|---|---|---|---|---|---|---|---|---|
| | ATEX | Vertical | Horizontal | thermal | conductivity | NSSHOU-J | H07RN-F | Isolation | | | |
| GKG2 40-4T-0020F | o | – | – | o | o | – | • | H | SAK 40-G11/2A | SAK 40-G11/2-3/4 | CFF 1 1/2" |
| GKG2 40-4R-0020F | o | – | – | o | o | – | • | H | SAK 40-G11/2A | SAK 40-G11/2-3/4 | CFF 1 1/2" |
| GKG2 40-4D-0020F | o | – | – | o | o | – | • | H | SAK 40-G11/2A | SAK 40-G11/2-3/4 | CFF 1 1/2" |
| GKG2 40-4G-0020F | o | – | – | o | o | – | • | H | SAK 40-G11/2A | SAK 40-G11/2-3/4 | CFF 1 1/2" |
| GKG2 40-4P-0025F | o | – | – | o | o | – | • | H | SAK 40-G11/2A | SAK 40-G11/2-3/4 | CFF 1 1/2" |
| GKG2 40-4A-0025F | o | – | – | o | o | – | • | H | SAK 40-G11/2A | SAK 40-G11/2-3/4 | CFF 1 1/2" |
| GKG2 40-4G-0038H | o | • | • | • | • | • | – | H | SAK 40-G11/2A | SAK 40-G11/2-3/4 | CFF 1 1/2" |
| GKG2 40-4D-0048H | o | • | • | • | • | • | – | H | SAK 40-G11/2A | SAK 40-G11/2-3/4 | CFF 1 1/2" |
| GKG2 40-4A-0065H | o | • | • | • | • | • | – | H | SAK 40-G11/2A | SAK 40-G11/2-3/4 | CFF 1 1/2" |

• = Standard - = Not present o = Optional

# GKG

calpeda®

## Performance

### n ≈ 2850 1/min

| | | | | | Q = Flow | | | | | | | | | | | | | |
|---|---|---|---|---|---|---|---|---|---|---|---|---|---|---|---|---|---|---|
| | | | | | m³/h | 0 | 1,1 | 1,4 | 1,8 | 2,2 | 2,5 | 2,9 | 3,2 | 3,6 | 7,2 | 10,8 | 14,4 | 18 |
| Model | 400V | 400V | 690V | P2 | l/min | 0 | 18,33 | 23,33 | 30 | 36,66 | 41,66 | 48,33 | 53,33 | 60 | 120 | 180 | 240 | 300 |
| | A | A | A | kW | H (m) = Total head | | | | | | | | | | | | | |
| GKG2 40-4T-0020F | 4,1 | - | - | 2 | | 23,3 | 22,4 | 22,2 | 22 | 21,8 | 21,6 | 21,4 | 21,2 | 21 | 18,9 | 16 | - | - |
| GKG2 40-4R-0020F | 4,1 | - | - | 2 | | 27,5 | 26,6 | 26,4 | 26,1 | 25,9 | 25,7 | 25,5 | 25,2 | 25 | 22,6 | 19,2 | - | - |
| GKG2 40-4D-0020F | 4,1 | - | - | 2 | | 23,8 | 23,2 | 23 | 22,9 | 22,7 | 22,5 | 22,3 | 22,2 | 22 | 20,3 | 18,3 | 15,4 | 10,6 |
| GKG2 40-4G-0020F | 4,1 | - | - | 2 | | 20,3 | 19,9 | 19,8 | 19,6 | 19,5 | 19,4 | 19,2 | 19,1 | 19 | 17,5 | 15,6 | 12,9 | 8,7 |
| GKG2 40-4P-0025F | 5,5 | - | - | 2,5 | | 33 | 31,6 | 31,4 | 31,1 | 30,9 | 30,7 | 30,4 | 30,2 | 30 | 27,5 | 23,9 | - | - |
| GKG2 40-4A-0025F | 5,5 | - | - | 2,5 | | 28,1 | 27,2 | 27 | 26,7 | 26,5 | 26,3 | 26 | 25,9 | 25,7 | 24,1 | 22,3 | 19,6 | 14,5 |
| GKG2 40-4G-0038H | 7,5 | - | - | 3,8 | | 37,5 | 36,8 | 36,6 | 36,3 | 36,1 | 35,8 | 35,5 | 35,3 | 35 | 31,9 | 28,7 | 25,4 | 19,3 |
| GKG2 40-4D-0048H | 8,9 | - | - | 4,8 | | 44,3 | 43,2 | 42,9 | 42,5 | 42,3 | 42 | 41,7 | 41,4 | 41,1 | 38,3 | 34,7 | 30,3 | - |
| GKG2 40-4A-0065H | - | 11,9 | 6,9 | 6,5 | | 52,6 | 51,3 | 50,9 | 50,5 | 50,1 | 49,7 | 49,3 | 48,9 | 48,5 | 44,6 | 40,7 | 36,9 | 30,9 |

# GKG

## Characteristic curves

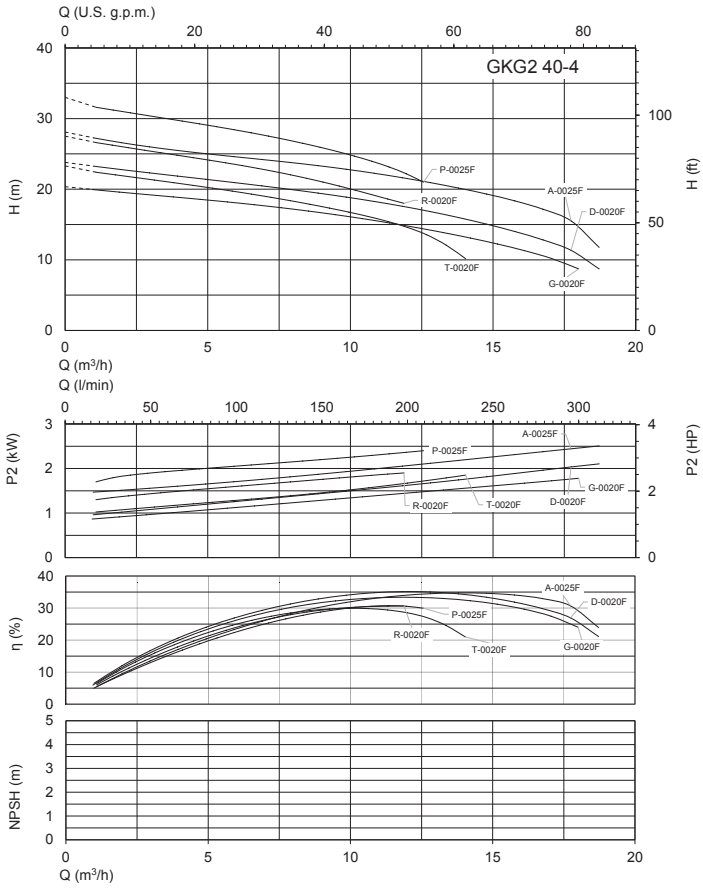


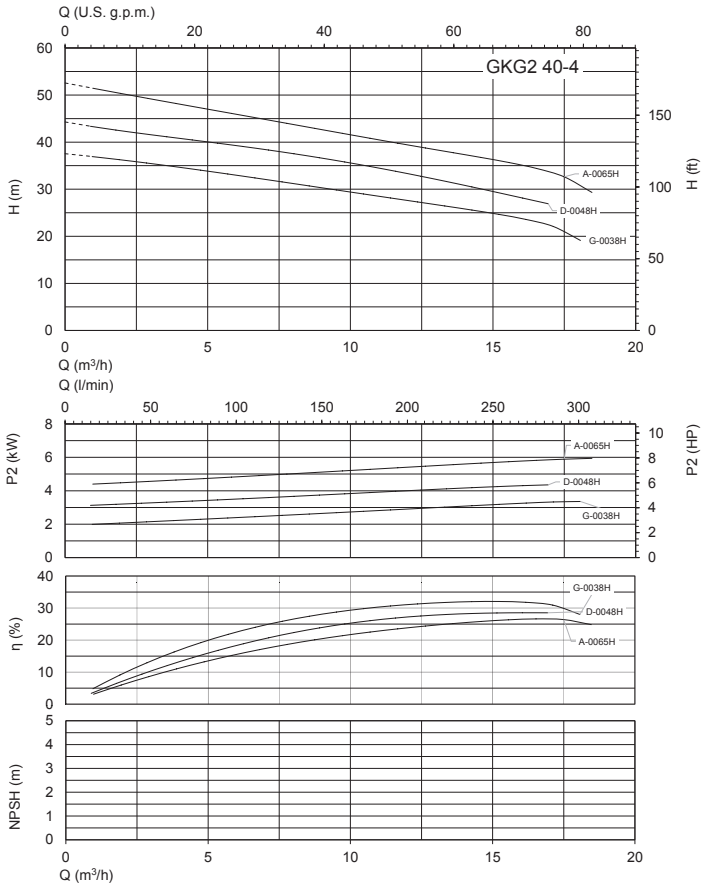

# GKG

## Dimensions and weight

**Duck foot coupling**

**SAK 40-G11/2A**

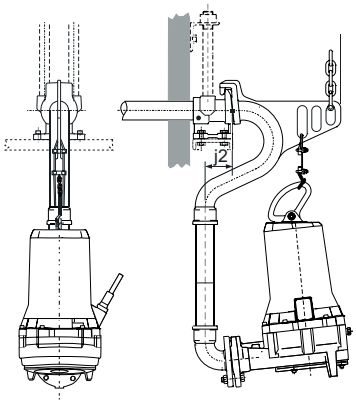


**Submersible pump rest**

**SAK 40-G11/2-3/4**

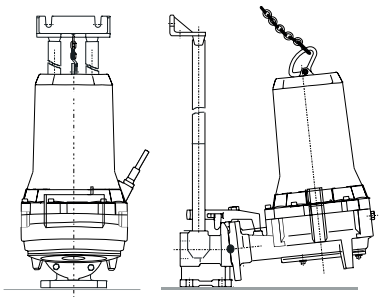

**Submersible pump with bend**

**CFF**

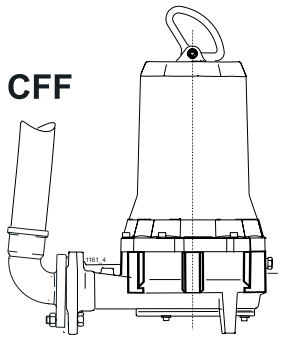


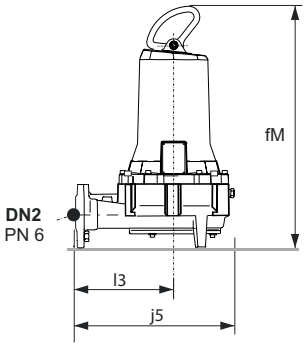


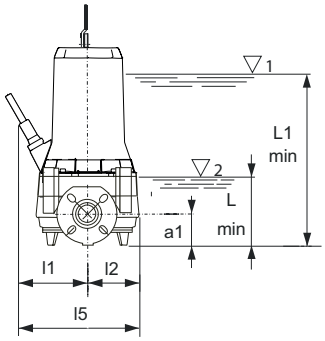


| TYPE | | mm | | | | | | | | | | Kg |
|---|---|---|---|---|---|---|---|---|---|---|---|---|
| | DN2 | a1 | fM | j5 | K | l1 | l2 | l3 | l5 | L1min | Lmin | Weight |
| GKG2 40-4T-0020F | 40 | 73 | 476.6 | 338 | 6 | 112 | 112 | 200 | 224 | 261 | 61 | 52 |
| GKG2 40-4R-0020F | 40 | 73 | 476.6 | 338 | 6 | 112 | 112 | 200 | 224 | 261 | 61 | 52 |
| GKG2 40-4D-0020F | 40 | 73 | 476.6 | 338 | 6 | 112 | 112 | 200 | 224 | 261 | 61 | 52 |
| GKG2 40-4G-0020F | 40 | 73 | 476.6 | 338 | 6 | 112 | 112 | 200 | 224 | 261 | 61 | 52 |
| GKG2 40-4P-0025F | 40 | 73 | 476.6 | 338 | 6 | 112 | 112 | 200 | 224 | 261 | 61 | 48 |
| GKG2 40-4A-0025F | 40 | 73 | 476.6 | 338 | 6 | 112 | 112 | 200 | 224 | 261 | 61 | 46 |
| GKG2 40-4G-0038H | 40 | 73 | 571.3 | 373 | 6 | 204.5 | 136.5 | 240 | 341 | 317 | 49 | 81.8 |
| GKG2 40-4D-0048H | 40 | 73 | 571.3 | 373 | 6 | 204.5 | 136.5 | 240 | 341 | 317 | 49 | 76 |
| GKG2 40-4A-0065H | 40 | 73 | 640.4 | 373 | 6 | 221 | 136.5 | 240 | 357.5 | 317 | 49 | 97 |

L1min = Minimum submergence depth for motor without casing with continuous duty S1 (NPSHR permitting)
Lmin = Minimum submergence depth for motor without casing with intermittent duty S3 (NPSHR permitting)

# ACCESSORIES

## Dimensions and weight

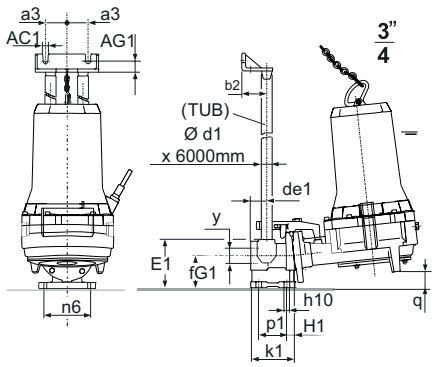


**Duck foot coupling**

| TYPE | mm | | | | | | | | | | | | | | |
|---|---|---|---|---|---|---|---|---|---|---|---|---|---|---|---|
| | a3 | AC1 | AG1 | b2 | d1 | de1 | E1 | fG1 | H1 | h10 | K1 | n6 | p1 | q | y |
| SAK 40-G11/2-3/4 | 52.5 | 12 | 27 | 60 | 3/4" | 40 | 120 | 80 | 21.5 | 14 | 113 | 115 | 70 | 37 | G1 1/2" |

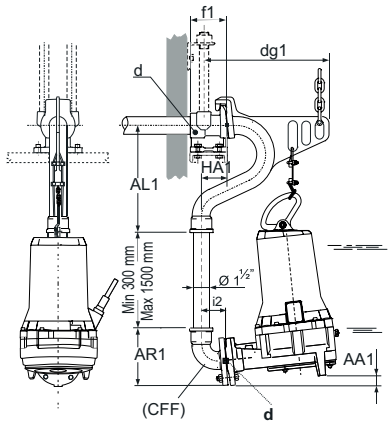


**Duck foot coupling**

| TYPE | mm | | | | | | | |
|---|---|---|---|---|---|---|---|---|
| | AA1 | AL1 | AR1 | d | dg1 | f1 | g3 | HA1 |
| SAK 40-G11/2A | 29 | 315 | 165 | G1 1/2" | 403 | 107 | 76 | 76 |

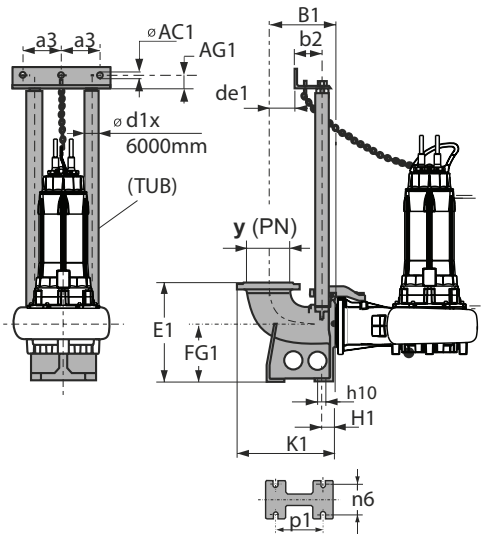


**Duck foot coupling**

| TYPE | mm | | | | | | | | | | | | | | | |
|---|---|---|---|---|---|---|---|---|---|---|---|---|---|---|---|---|
| | a3 | AC1 | AG1 | B1 | b2 | d1 | de1 | E1 | fG1 | H1 | h10 | K1 | n6 | p1 | y | PN |
| SAK 65-65-2 | 130 | 12.5 | 35 | 220 | 102 | 2" | 40 | 280 | 160 | 47 | 18 | 312,5 | 110 | 156 | 65 | 16 |
| SAK 65-80-2 | 130 | 12.5 | 35 | 220 | 102 | 2" | 40 | 280 | 160 | 47 | 18 | 320 | 110 | 156 | 80 | 16 |
| SAK 80-100-2 | 130 | 12.5 | 35 | 228 | 102 | 2" | 48 | 320 | 180 | 47 | 18 | 338 | 110 | 156 | 100 | 16 |
| SAK 80-80-2 | 130 | 12.5 | 35 | 220 | 102 | 2" | 40 | 320 | 180 | 47 | 18 | 320 | 110 | 156 | 80 | 16 |
| SAK 100-100-2 | 130 | 12.5 | 35 | 228 | 102 | 2" | 48 | 430 | 280 | 49 | 18 | 338 | 194 | 186 | 100 | 16 |
| SAK 100-100-2A | 130 | 12.5 | 35 | 228 | 102 | 2" | 48 | 350 | 200 | 49 | 18 | 338 | 135 | 186 | 100 | 16 |
| SAK 150-150-2 | 158 | 12.5 | 35 | 260 | 102 | 2" | 75 | 435 | 235 | 59 | 19 | 403 | 194 | 214 | 150 | 16 |
| SAK 150-200-3 | 157.5 | 12.5 | 35 | 385 | 117 | 3" | 180 | 540 | 290 | 80 | 24 | 555 | 210 | 280 | 200 | 10 |
| SAK 200-250-3 | 157.5 | 12.5 | 35 | 425 | 117 | 3" | 220 | 595 | 345 | 80 | 24 | 623 | 250 | 380 | 250 | 10 |
| SAK 200-250-3 | 157.5 | 12.5 | 35 | 425 | 117 | 3" | 220 | 595 | 345 | 80 | 24 | 623 | 250 | 380 | 250 | 10 |
| SAK 250-300-3 | 157,5 | 12,5 | 35 | 450 | 117 | 3" | 245 | 700 | 400 | 85 | 24 | 673 | 310 | 425 | 300 | 10 |
| SAK 300-350-3 | 157,5 | 12,5 | 35 | 500 | 117 | 3" | 295 | 820 | 500 | 90 | 24 | 755 | 360 | 475 | 350 | 10 |
| SAK 350-400-3 | 157,5 | 12,5 | 35 | 525 | 117 | 3" | 320 | 920 | 575 | 95 | 24 | 810 | 400 | 510 | 400 | 10 |
| SAK 250-300-3A | 157,5 | 12,5 | 35 | 450 | 117 | 3" | 245 | 700 | 400 | 85 | 24 | 673 | 310 | 425 | 300 | 10 |
| SAK 300-350-3A | 157,5 | 12,5 | 35 | 500 | 117 | 3" | 295 | 820 | 500 | 90 | 24 | 755 | 360 | 475 | 350 | 10 |
| SAK 350-400-3A | 157,5 | 12,5 | 35 | 525 | 117 | 3" | 320 | 920 | 575 | 95 | 24 | 810 | 400 | 510 | 400 | 10 |

# ACCESSORIES

## Dimensions and weight

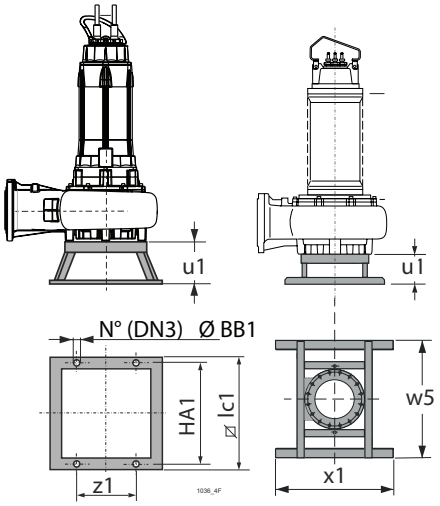


### Submersible pump rest

| TYPE | mm | | | | | | | |
|---|---|---|---|---|---|---|---|---|
| | BB1 | DN3 | HA1 | lc1 | u1 | w5 | x1 | z1 |
| APK 80 | 12 | 4 | 400 | 440 | 166 | - | - | 230 |
| APK 100 | 14 | 4 | 600 | 650 | 180 | - | - | 350 |
| APK 100A | 14 | 4 | 600 | 650 | 180 | - | - | 350 |
| APK 150 | 14 | 4 | 600 | 650 | 220 | - | - | 350 |
| APK 150A | - | - | - | - | 280 | 1000 | 1000 | - |
| APK 250 | 14 | 4 | 600 | 650 | 220 | - | - | 350 |
| APK 350 | - | - | - | - | 280 | 1000 | 1000 | - |

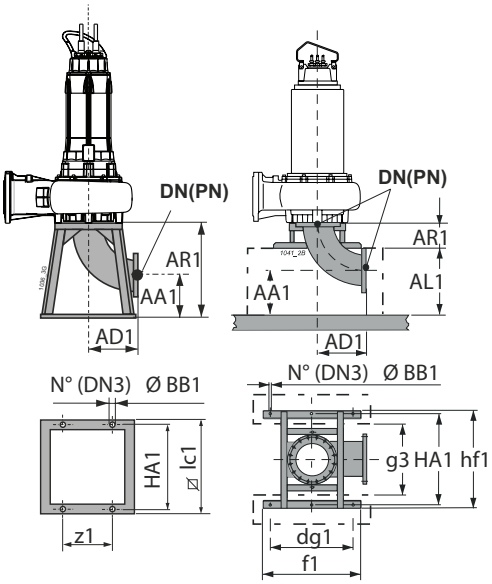


### Dry chamber pump rest

| TYPE | mm | | | | | | | | | | | | | | |
|---|---|---|---|---|---|---|---|---|---|---|---|---|---|---|---|
| | DN | PN | AA1 | AD1 | AL1 | AR1 | BB1 | dg1 | DN3 | f1 | g3 | HA1 | hf1 | lc1 | z1 |
| APCK 65 | 65 | 16 | 150 | 140 | - | 290 | 12 | - | 4 | - | - | 390 | - | 440 | 230 |
| APCK 80 | 80 | 16 | 126 | 164 | - | 290 | 12 | - | 4 | - | - | 390 | - | 440 | 230 |
| APCK 100 | 100 | 16 | 135 | 204 | - | 340 | 22 | - | 4 | - | - | 600 | - | 650 | - |
| APCK 150 | 150 | 16 | 285 | 395 | 400 | 280 | 22 | 850 | 6 | 1000 | 740 | 935 | 1000 | - | - |
| APCK 150A | 150 | 16 | 205 | 395 | - | 600 | 22 | - | 4 | - | - | 600 | - | 650 | - |
| APCK 200 | 200 | 10 | 290 | 310 | - | 600 | 22 | - | 4 | - | - | 600 | - | 650 | - |
| APCK 250 | 250 | 10 | 215 | 385 | - | 600 | 22 | - | 4 | - | - | 600 | - | 650 | - |
| APCK 250A | 250 | 10 | 295 | 385 | 400 | 280 | 22 | 850 | 6 | 1000 | 740 | 935 | 1000 | - | - |
| APCK 300 | 300 | 10 | 320 | 465 | 500 | 280 | 22 | 850 | 6 | 1000 | 740 | 935 | 1000 | - | - |
| APCK 350 | 350 | 10 | 345 | 540 | 600 | 280 | 22 | 850 | 6 | 1000 | 740 | 935 | 1000 | - | - |

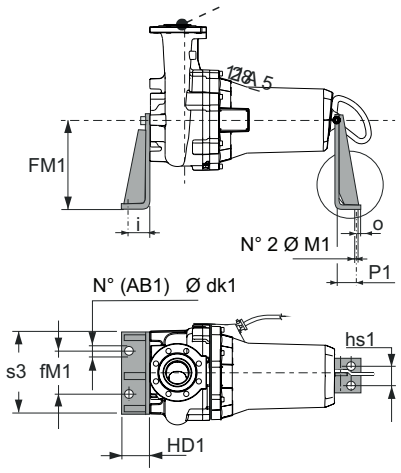


### Dry chamber pump support

| TYPE | mm | | | | | | | | | | |
|---|---|---|---|---|---|---|---|---|---|---|---|
| | AB1 | c1 | dk1 | fM1 | HD1 | hs1 | i | M1 | o | P1 | s3 |
| SOK80/N3 | 2 | 400 | 22 | 270 | 100 | 100 | 66 | 22 | 34 | 43 | 400 |
| SOK100/N3 | 2 | 400 | 22 | 320 | 100 | 100 | 66 | 22 | 34 | 43 | 470 |
| SOK150/N3 | 2 | 400 | 22 | 320 | 100 | 100 | 66 | 22 | 34 | 43 | 470 |
| SOK150-200 | 3 | 530 | 22 | 335 | 160 | 270 | 100 | 22 | 40 | 85 | - |
| SOK150-225 | 3 | 530 | 22 | 335 | 160 | 270 | 100 | 22 | 40 | 85 | - |
| SOK150-250 | 3 | 530 | 22 | 335 | 160 | 270 | 100 | 22 | 40 | 85 | - |
| SOK350-200 | 3 | 530 | 22 | 500 | 160 | 270 | 100 | 22 | 40 | 85 | - |
| SOK350-225 | 3 | 530 | 22 | 500 | 160 | 270 | 100 | 22 | 40 | 85 | - |
| SOK350-250 | 3 | 530 | 22 | 500 | 160 | 270 | 100 | 22 | 40 | 85 | - |
| SOK 350-280 | 3 | 530 | 22 | 500 | 160 | 270 | 100 | 22 | 100 | 20 | - |
| SOK 350-315 | 3 | 530 | 22 | 500 | 160 | 270 | 100 | 22 | 100 | 20 | - |

# ACCESSORIES

## Installation with duck foot coupling

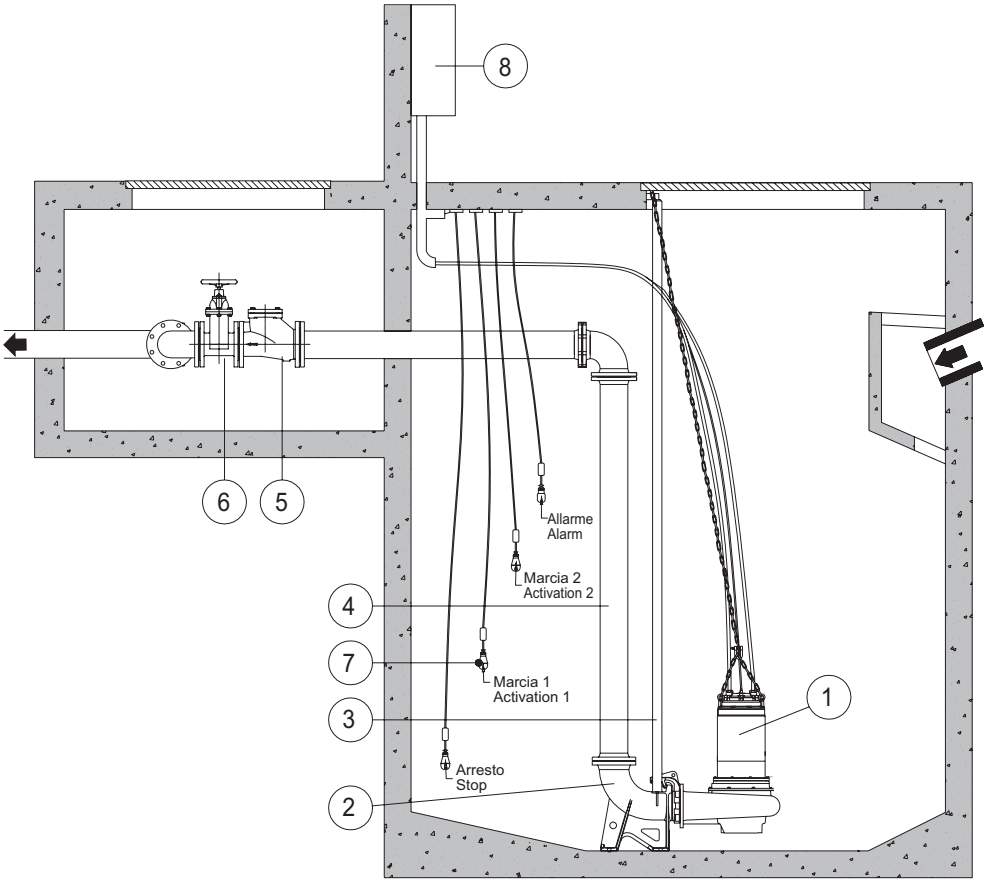


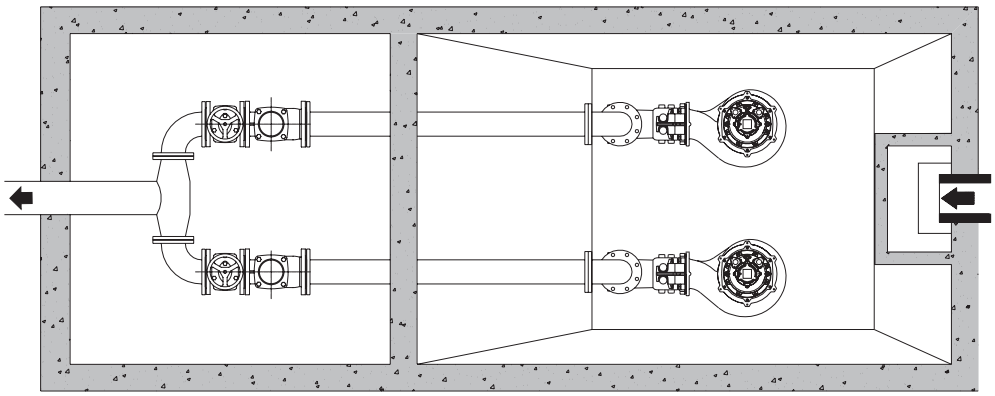

2 Submersible pump
3 Duck foot coupling
4 Guide pipes
5 Delivery pipe
6 Check valve
7 Gate valve
8 Level floats
9 Control box

# GEOTRIT

| Q m3/h | 0 | 1,2 | 2,4 | 3,6 | 4,8 | 5,4 |
|---|---|---|---|---|---|---|
| Q l/min | 0 | 20 | 40 | 60 | 80 | 90 |
| H m | 8 | 7,1 | 5,9 | 4,3 | 2,2 | 1,1 |

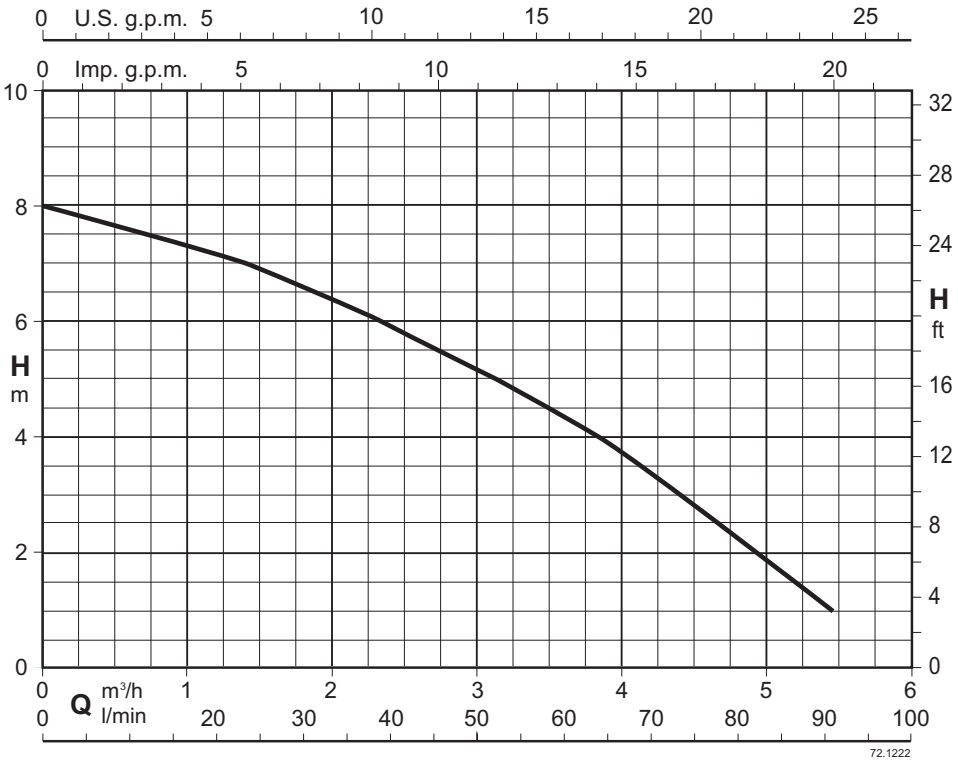


# Automatic waste water lifting station

# GEOTRIT

calpeda®

## Construction

This macerating pumping system has been designed to pump away the waste water from a WC and a washbasin.
GEOTRIT makes it possible to reach the sewerage system when it is not in the right position to facilitate a normal connection.
Installed and used correctly, this unit will give consistent and reliable service.
GEOTRIT is provided with flexible sleeves, elbow, metal hose clips.

## Applications

GEOTRIT can be used for drains from Wcs and washbasins

## Operating conditions

Voltage: 220-240 V
Frequency: 50 Hz
Degree of protection: IP44
Maximum power rating: 400 W
Maximum current consumption: 1,9 A
Vertical pumping: max. 4 m
Liquid temperature up to 35° C.

## Installation

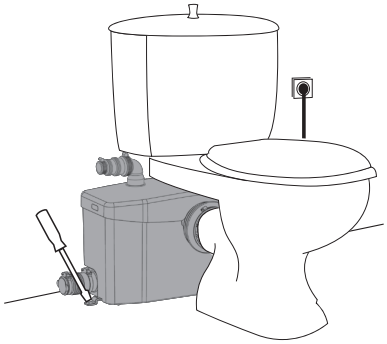

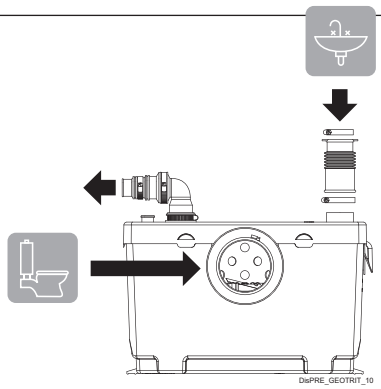


## Performance

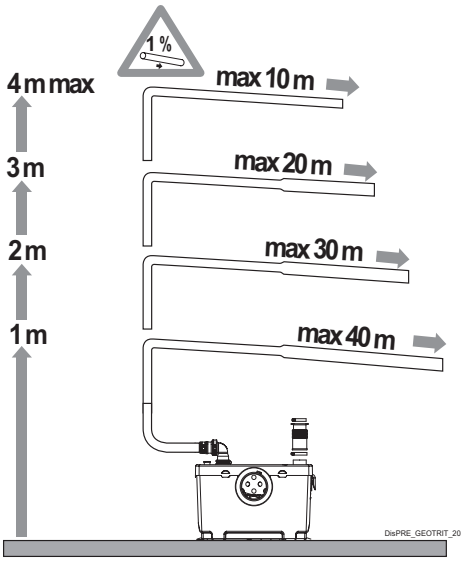


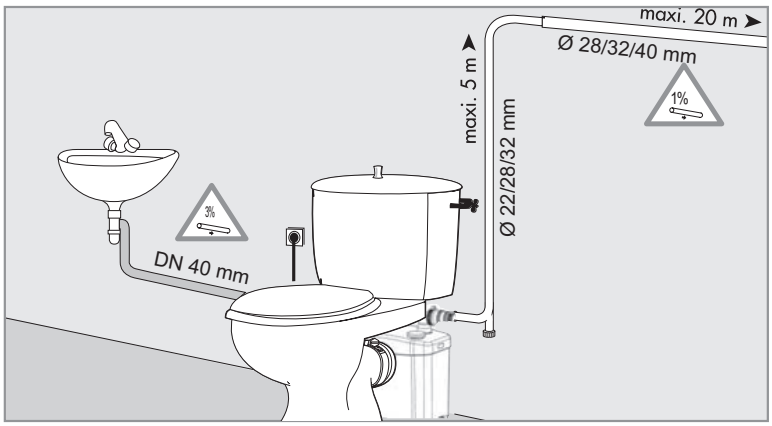


## Dimensions and weights

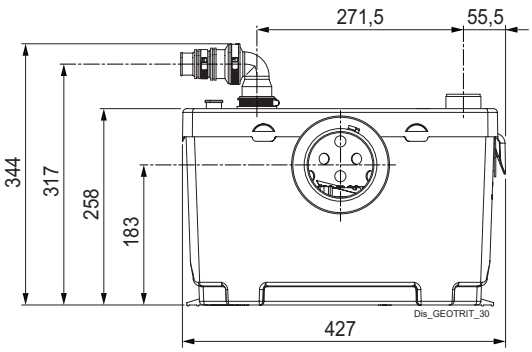


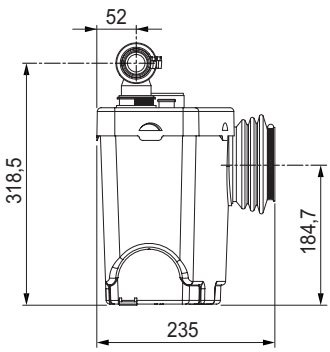


Weight: 6.6 kg

# GEOCOMP

calpeda

| Q m3/h | 0 | 1,2 | 2,4 | 3,6 | 4,8 | 5,4 |
|---|---|---|---|---|---|---|
| Q l/min | 0 | 20 | 40 | 60 | 80 | 90 |
| H m | 8 | 7,1 | 5,9 | 4,3 | 2,2 | 1,1 |

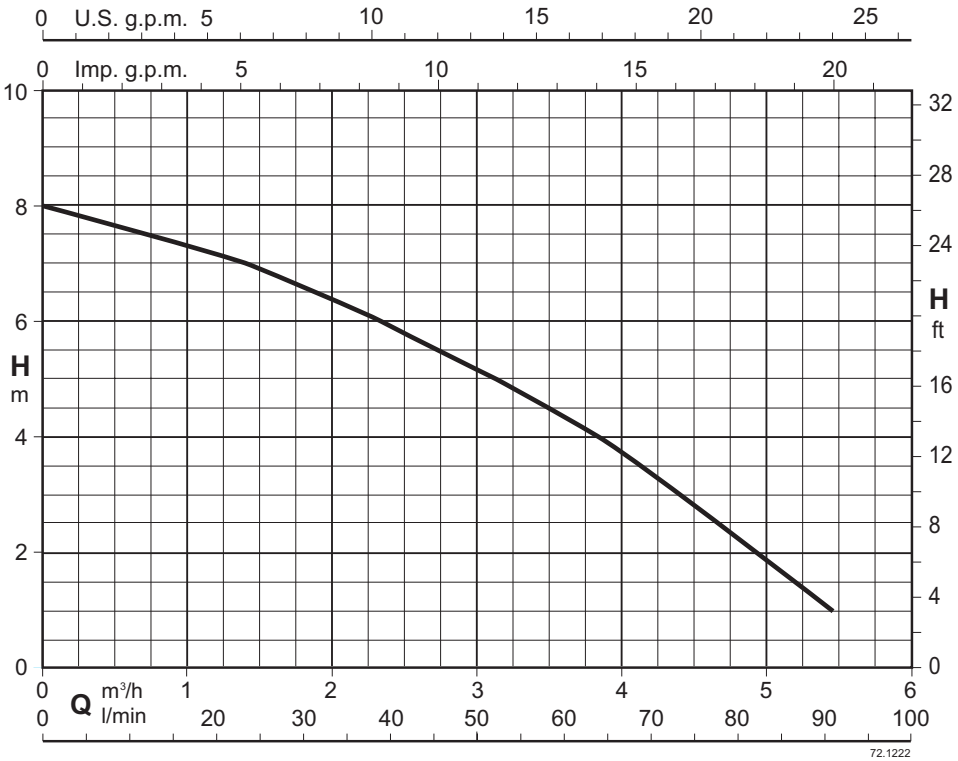


# Automatic waste water lifting station

ed. 03/2025

# GEOCOMP

calpeda®

## Construction

This macerating pumping system has been designed to pump away the waste water from WC, washbasin, bidet and shower.
The GEOCOMP macerating system is installed in a case specifically designed for horizontal outlet spigots.
Installed and used correctly, this unit will give consistent and reliable service.
GEOCOMP is provided with flexible sleeves, elbow, metal hose clips.

## Applications

GEOCOMP can be used for drains from: WCs, washbasins, bidets, bathtubs, showers.

## Operating conditions

Voltage: 220-240 V
Frequency: 50 Hz
Degree of protection: IP44
Maximum power rating: 400 W
Maximum current consumption: 1,9 A
Vertical pumping: max. 4 m
Liquid temperature up to 35° C.

## Installation

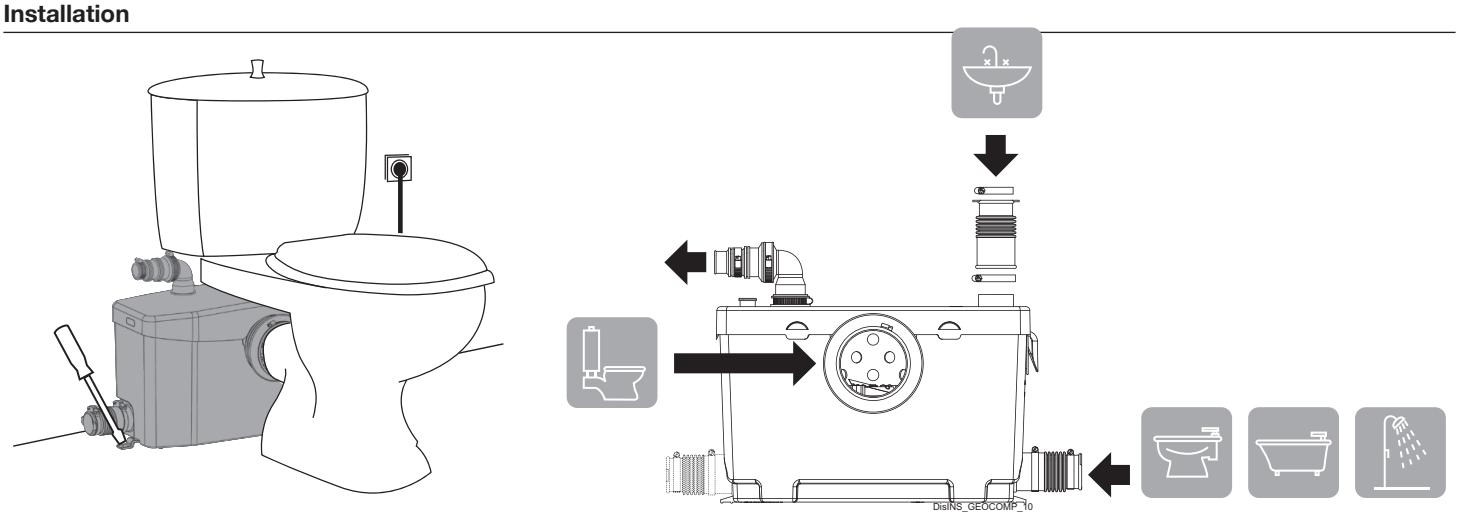


## Performance

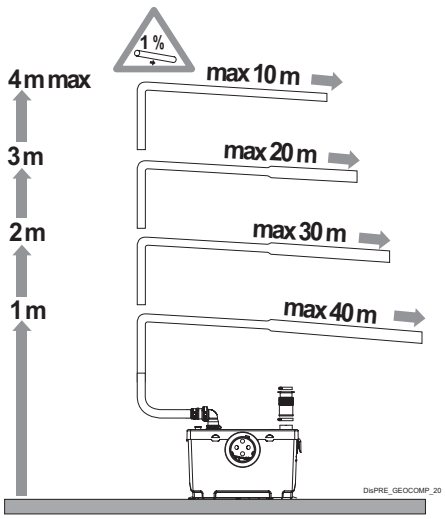


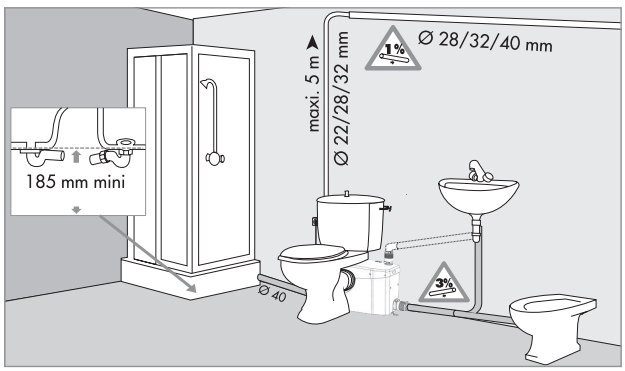


## Dimensions and weights

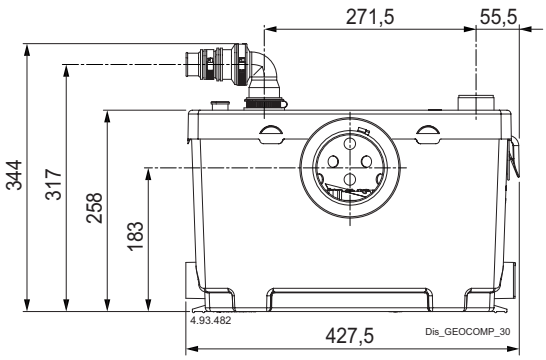


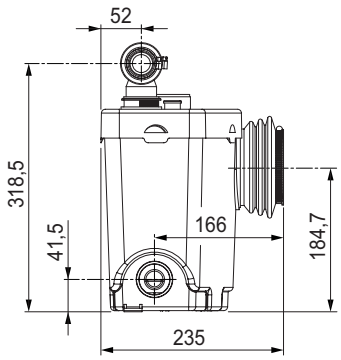


Weight: 6.6 kg

# GEOCLEAN

calpeda®

| Q m3/h | 0 | 1,2 | 2,4 | 3,6 | 4,8 | 5,6 |
|---|---|---|---|---|---|---|
| Q l/min | 0 | 20 | 40 | 60 | 80 | 93 |
| H m | 8 | 7,1 | 5,9 | 4,5 | 2,7 | 1 |

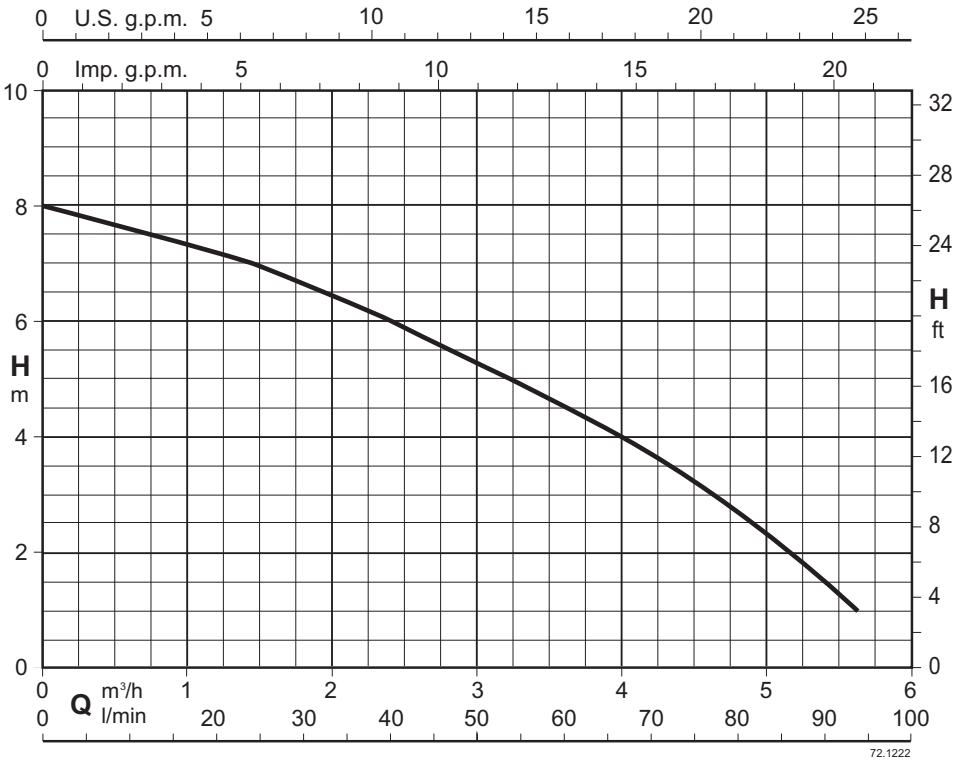


# Automatic clear water lifting station

# GEOCLEAN

calpeda®

## Construction

The system is design to handle the evacuation water from a domestic kitchen sink, dishwasher and washing machine – all working at the same time if required. GEOCLEAN makes the addition of a domestic kitchen or utility room easy even when below or distant from a drain.
The system has a clapet valve and it cannot be used with waste waters.
GEOCLEAN is provided with flexible sleeves, elbow, metal hose clips, plugs.

## Applications

GEOCLEAN can be used for drains from: washbasin, bidet, bathtub, shower, kitchen sink, dishwasher, washing machine.

## Operating conditions

Voltage: 220-240 V
Frequency: 50 Hz
Degree of protection: IP44
Maximum power rating: 400 W
Maximum current consumption: 1,9 A
Vertical pumping: max. 4 m
Liquid temperature up to 60 °C.

## Installation

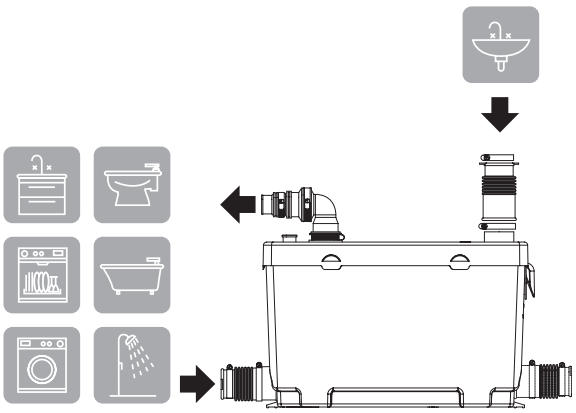

## Performance

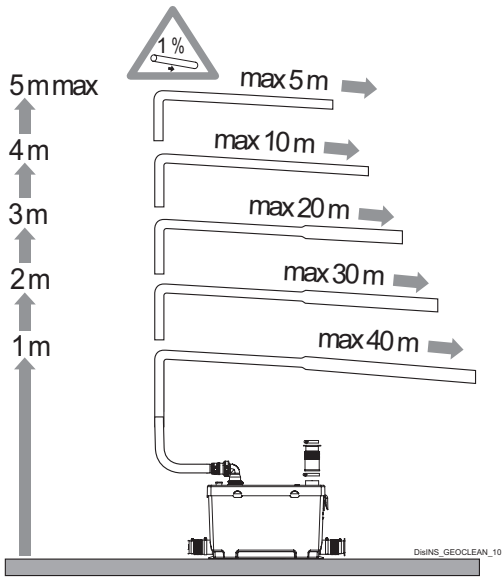


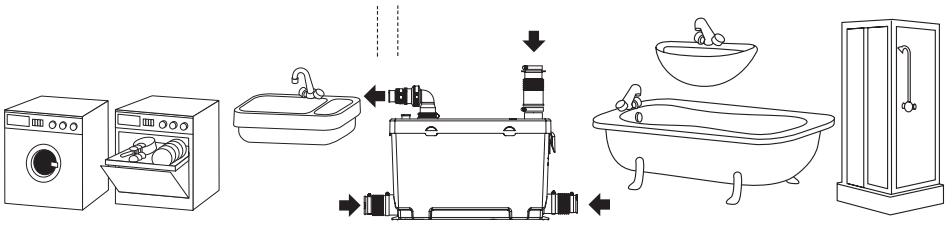

## Dimensions and weights

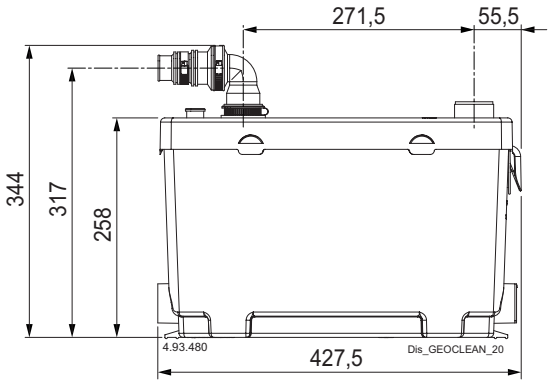


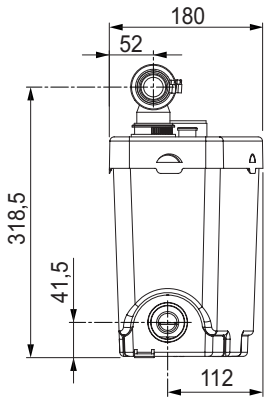


Weight: 6.4 kg

# GEO

**GEO 40**

**GEO 230**

**GEO 500**

## Construction

Medium-density polyethylene tank, resistant to corrosion, with minimum overall dimensions.
GEO 40 single tank with 40 liters nominal capacity for the installation of a GXRM type.
GEO 230 single tank with 230 liters nominal capacity for the installation of an electropump type GM 10, GQ, GX or GM series.
Pipe kit for electropump connection.
Two installation options: on the ground and underground.
For underground installation, extentions can be used (maximum two extentions).
Easy pump access through a cover fixed with screws.

## Applications

Automatic waste water collecting and lifting stations, to handle domestic, civil and industrial waste water.

## Designation

Example: GEO 40-GXRM 9
GEO = Series
40 = Nominal flow rate in litres
GXRM 9 = Pump type

Example: GEO 230-GXVM 40
GEO = Series
230 = Nominal flow rate in litres
GXVM 40-7 = Pump type

Example: GEO 500-2GXRM 40-7
GEO = Series
500 = Nominal flow rate in litres
2GXRM 40-7 = Pump type

# Automatic waste water collecting and lifting station

# GEO 40

## Pumps characteristics

GEO 40-GXRM

GEO 40-GXRM .GF

**Characteristics**
Automatic collecting and lifting station for clean water with GXRM pump type.

**It includes:**
1 40 lt capacity tank
1 single-phase pump with 5 m cable and float switch
1 non-return valve with clapet on the pump delivery side
1 discharge pipe kit arranged for the connection of a Ø 40 mm PVC pipe
1 PVC adapter nipple for 40 mm diameter inlet
1 hose connector for 25 mm diameter hose

**On request:**
1 pump with 10 m cable

| Type single-phase | 1 ~ 230 V | 1 ~ 230 V | Q max | H max |
|---|---|---|---|---|
| | kW | A | m3/h | m |
| GEO 40-GXRM 9 | 0,25 | 2,5 | 10,2 | 8,3 |
| GEO 40-GXRM 9 GF | 0,25 | 2,5 | 10,2 | 8,3 |
| GEO 40-GXRM 11 GF | 0,37 | 3,5 | 12 | 10,4 |
| GEO 40-GXRM 13 GF | 0,45 | 4,5 | 13,2 | 11,7 |

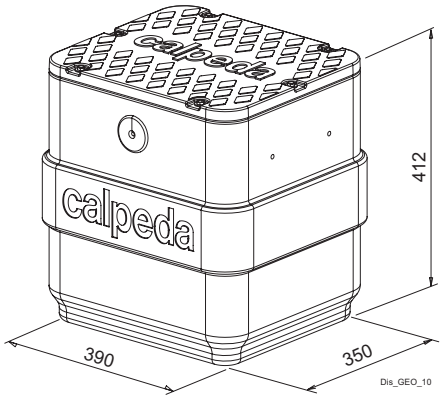

**GXRM**
Submersible drainage pumps made of chrome-nickel stainless steel, with vertical delivery port.
Open impeller
2-pole induction motor, 50Hz (n ≈ 2900 rpm), Single-phase 230 V +/-10% with float switch and thermal protector.
- GXRM: with standard float switch.
- GXRM .. GF: with vertical magnetic float switch.
Cable length 5 m, Shuko plug.
Liquid temperature up to 35° C.

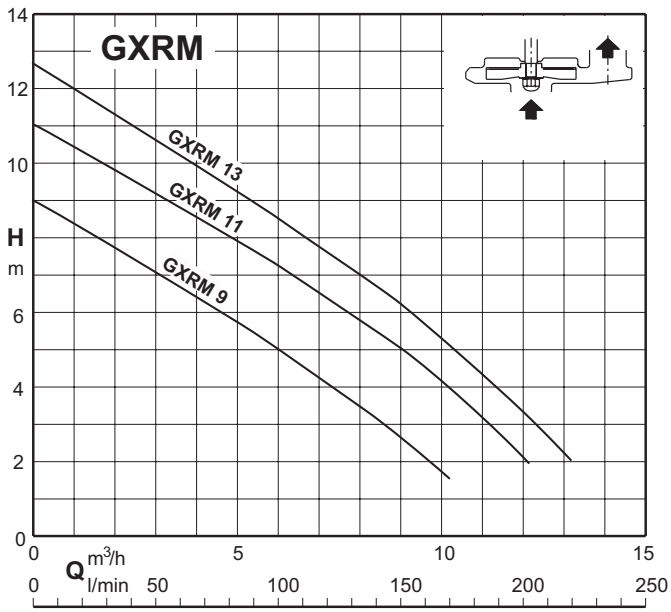

# GEO 230

## Pumps characteristics

GEO 230-GX..

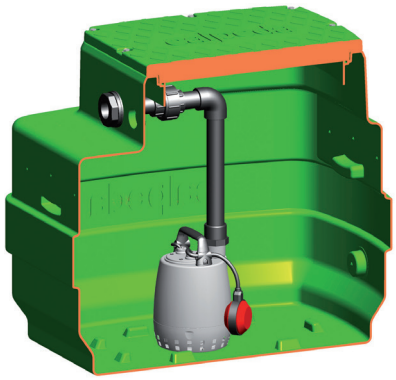

**Characteristics**
Automatic collecting and lifting station
- for clean water GXR pump series.
- for waste water GXV pump series.

**It includes:**
1 tank capacity 230 l
1 single-phase pump with 5 m cable and float switch
1 discharge pipe kit Ø 40 mm in PVC

On request:
1 pump with 10 m cable
1 discharge pipe kit Ø 40 mm in PVC with a ball valve and non-return ball valve
1 support kit with safety float switch and auto-supplied control panel for remote alarm with horn and flashing light
- extention 300 mm

| Type single-phase | 1 ~ 230 V | 1 ~ 230 V | Q max | H max |
|---|---|---|---|---|
| | kW | A | m3/h | m |
| GEO 230-GXVM 25-6 | 0,25 | 2,5 | 10,2 | 5,7 |
| GEO 230-GXVM 25-8 | 0,37 | 3,5 | 12 | 7,8 |
| GEO 230-GXVM 25-10 | 0,45 | 4,5 | 13,2 | 9,5 |
| GEO 230-GXRM 9 | 0,25 | 2,5 | 10,2 | 8,3 |
| GEO 230-GXRM 11 | 0,37 | 3,5 | 12 | 10,4 |
| GEO 230-GXRM 13 | 0,45 | 4,5 | 13,2 | 11,7 |

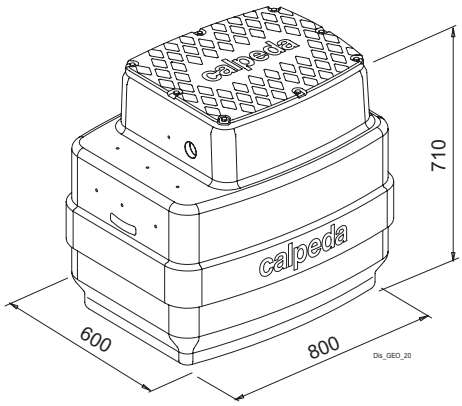

**GXRM, GXVM**
Submersible drainage pump in chrome-nickel stainless steel, with vertical delivery port.
**GXRM:**with open impeller.
**GXVM:**with free-flow (vortex) impeller
2-pole induction motor, 50Hz (n ≈ 2900 rpm), Single-phase 230 V +/-10% with float switch and thermal protector.
Float switch for automatic operation.
5 m cable and control box QM 6,3 with capacitor.
Liquid temperature up to 35° C.

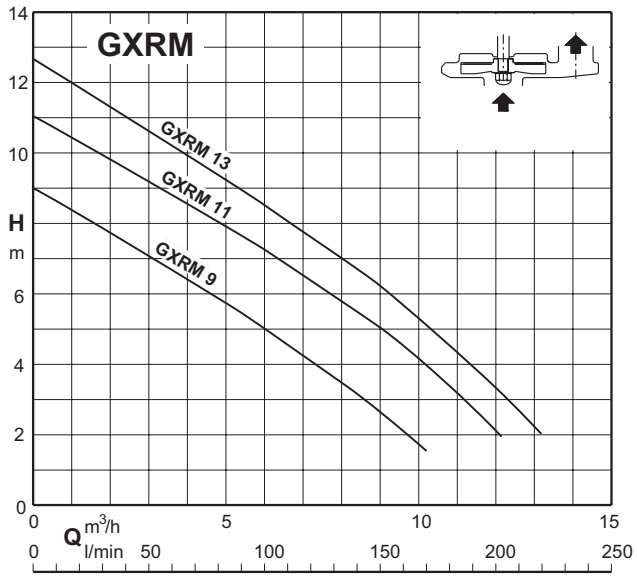


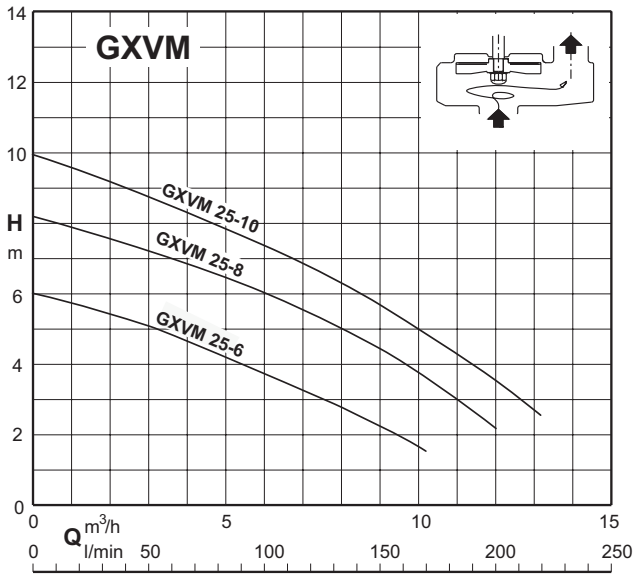

# GEO 230

## Pumps characteristics

GEO 230-GQR..

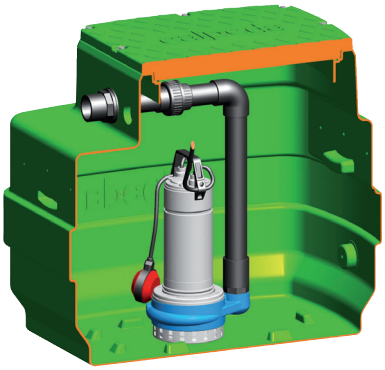

**Characteristics**
Automatic collecting and lifting station for clean water with GQR pump series.

**It includes:**
1 tank capacity 230 l
1 pump
- - single-phase with 10 m cable and float switch
- - three-phase with 10 m cable with support and float switch kit
1 control box for three-phase version
1 discharge pipe kit Ø 50 mm in PVC

**On request:**
1 discharge pipe kit Ø 50 mm in PVC with a ball valve and non-return ball valve
1 support kit with safety float switch and auto-supplied control panel for remote alarm with horn and flashing light
- extention 300 mm

| Type single-phase | 1 ~ 230 V | 1 ~ 230 V | Q max | H max |
|---|---|---|---|---|
| | kW | A | m3/h | m |
| GEO 230-GQRM 10-10 | 0,45 | 3,1 | 18 | 9,5 |
| GEO 230-GQRM 10-12 | 0,55 | 3,6 | 21 | 11,6 |
| GEO 230-GQRM 10-14 | 0,75 | 4,6 | 24 | 13,5 |
| GEO 230-GQRM 10-16 | 0,9 | 6 | 27 | 15,5 |
| GEO 230-GQRM 10-18 | 1,1 | 8 | 30 | 17,5 |
| GEO 230-GQRM 10-20 | 1,5 | 13 | 30 | 19,5 |

| Type three-phase | 3 ~ 400 V | 3 ~ 400 V | Q max | H max |
|---|---|---|---|---|
| | kW | A | m3/h | m |
| GEO 230-GQR 10-10 | 0,45 | 1,2 | 18 | 9,5 |
| GEO 230-GQR 10-12 | 0,55 | 1,4 | 21 | 11,6 |
| GEO 230-GQR 10-14 | 0,75 | 1,6 | 24 | 13,5 |
| GEO 230-GQR 10-16 | 0,9 | 2,3 | 27 | 15,5 |
| GEO 230-GQR 10-18 | 1,1 | 2,8 | 30 | 17,5 |
| GEO 230-GQR 10-20 | 1,5 | 3,8 | 30 | 19,5 |

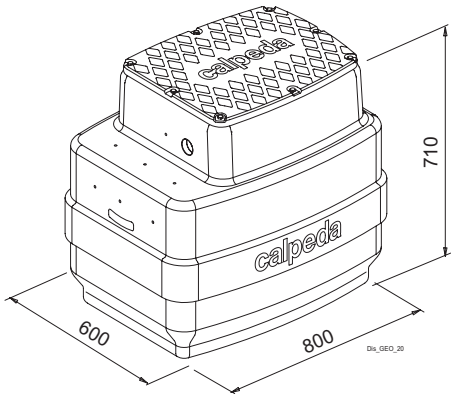


**GQR**
Single-impeller submersible drainage pump, with vertical delivery port.
**GQR:**with open impeller.
2-pole induction motor, 50 Hz (n ≈ 2900 rpm).
**GQR:**three-phase 400 V +/-10%;
**GQRM:**Single-phase 230 V +/-10% with float switch and thermal protector.
Incorporated capacitor.
Float switch for automatic start and stop.
Cable length 10 m.
Liquid temperature up to 35° C.

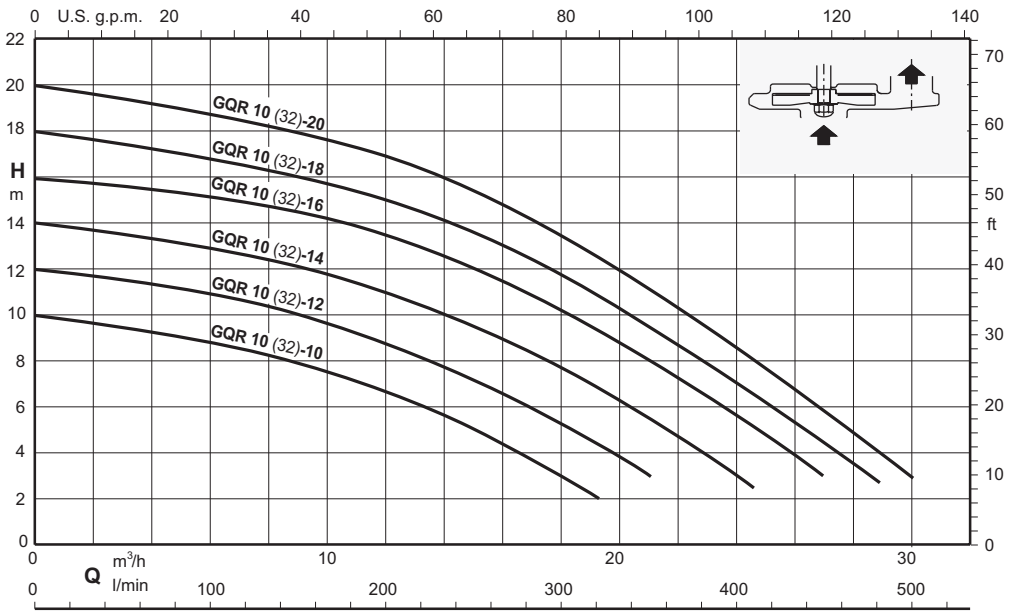

# GEO 230

## Pumps characteristics

GEO 230-GQR..

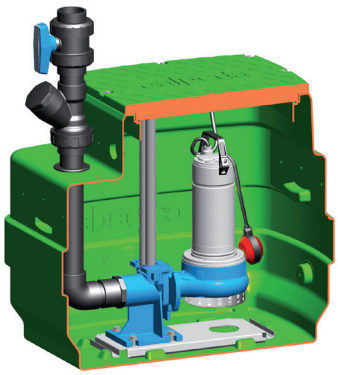

**Characteristics**
Dirty water collection and lifting station with GQR series pumps.

**It includes:**
1 tank capacity 230 l
1 pump
- - single-phase with 10 m cable and float switch
- - three-phase with 10 m cable with support and float switch kit
1 control box for three-phase version
1 duck foot coupling kit
1 discharge pipe kit Ø 63 mm in PVC with a ball valve and non-return ball valve

**On request:**
1 support kit with safety float switch and auto-supplied control panel for remote alarm with horn and flashing light
- extention 300 mm

| Type single-phase | 1 ~ 230 V | 1 ~ 230 V | Q max | H max |
|---|---|---|---|---|
| | kW | A | m3/h | m |
| GEO 230-GQRM 10 32-10 | 0,45 | 3,1 | 18 | 9,5 |
| GEO 230-GQRM 10 32-12 | 0,55 | 3,6 | 21 | 11,6 |
| GEO 230-GQRM 10 32-14 | 0,75 | 4,6 | 24 | 13,5 |
| GEO 230-GQRM 10 32-16 | 0,9 | 6 | 27 | 15,5 |
| GEO 230-GQRM 10 32-18 | 1,1 | 8 | 30 | 17,5 |
| GEO 230-GQRM 10 32-20 | 1,5 | 13 | 30 | 19,5 |

| Type three-phase | 3 ~ 400 V | 3 ~ 400 V | Q max | H max |
|---|---|---|---|---|
| | kW | A | m3/h | m |
| GEO 230-GQR 10 32-10 | 0,45 | 1,2 | 18 | 9,5 |
| GEO 230-GQR 10 32-12 | 0,55 | 1,4 | 21 | 11,6 |
| GEO 230-GQR 10 32-14 | 0,75 | 1,6 | 24 | 13,5 |
| GEO 230-GQR 10 32-16 | 0,9 | 2,3 | 27 | 15,5 |
| GEO 230-GQR 10 32-18 | 1,1 | 2,8 | 30 | 17,5 |
| GEO 230-GQR 10 32-20 | 1,5 | 3,8 | 30 | 19,5 |

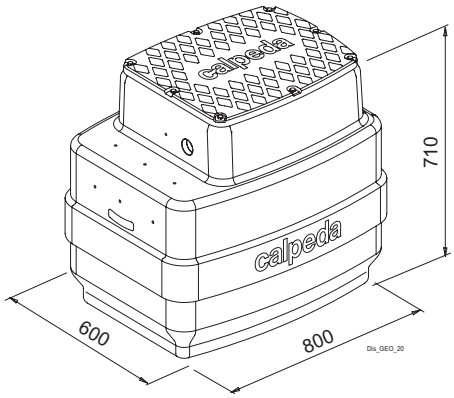


GQR
Submersible pumps with high power grinder, with horizontal delivery port.
GQR:with open impeller.
2-pole induction motor, 50Hz (n ≈ 2900 rpm)
GQR:three-phase 400 V +/-10%;
GQRM:Single-phase 230 V +/-10% with float switch and thermal protector. Incorporated capacitor.
Float switch for automatic start and stop.
Cable length 10 m.
Liquid temperature up to 35° C.

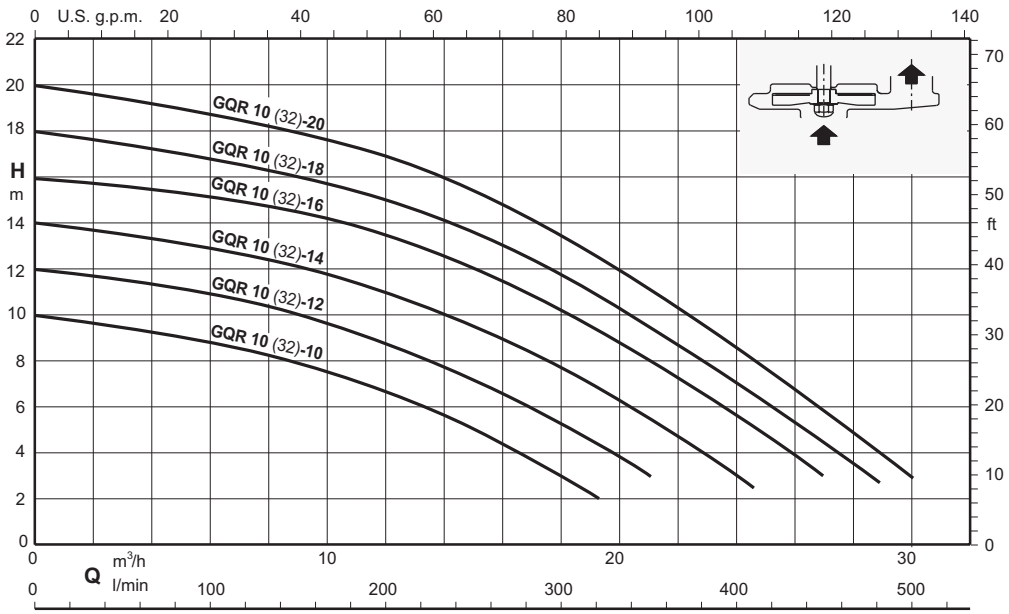

# GEO 230

## Pumps characteristics

GEO 230-GX..

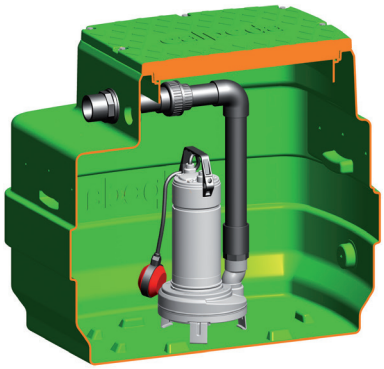

**Characteristics**
Dirty water collection and lifting station with GX 40 series pumps.

**It includes:**
- 1 tank capacity 230l
- 1 Pump
  - - single-phase with 10 m cable and float switch
  - - three-phase with 10 m cable with support and float switch kit
- 1 control box for three-phase version
- 1 discharge pipe kit Ø 50 mm in PVC

**On request:**
- 1 discharge pipe kit Ø 50 mm in PVC with a ball valve and non-return ball valve
- 1 safety float switch (with support for single-phase version) and autosupplied control panel for remote alarm with horn and flashing light
- - extention 300 mm

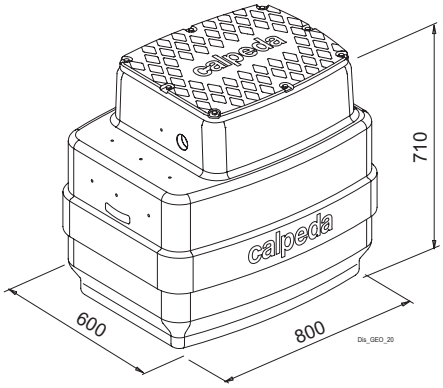


| Type single-phase | 1 ~ 230 V | 1 ~ 230 V | Q max | H max |
|---|---|---|---|---|
| | kW | A | m3/h | m |
| GEO 230-GXCM 40-10 | 0,55 | 4,6 | 21 | 9 |
| GEO 230-GXCM 40-13 | 0,9 | 6,6 | 26 | 11,6 |
| GEO 230-GXVM 40-7 | 0,55 | 4,6 | 15 | 6,2 |
| GEO 230-GXVM 40-8 | 0,75 | 5,4 | 18 | 7,2 |
| GEO 230-GXVM 40-9 | 0,9 | 6 | 21 | 8,1 |

| Type three-phase | 3 ~ 400 V | 3 ~ 400 V | Q max | H max |
|---|---|---|---|---|
| | kW | A | m3/h | m |
| GEO 230-GXC 40-10 | 0,55 | 1.6 | 21 | 9 |
| GEO 230-GXC 40-13 | 0,9 | 2.3 | 26 | 11,6 |
| GEO 230-GXV 40-7 | 0,55 | 1.6 | 15 | 6,2 |
| GEO 230-GXV 40-8 | 0,75 | 2.2 | 18 | 7,2 |
| GEO 230-GXV 40-9 | 0,9 | 2.3 | 21 | 8,1 |

**GXC, GXV**
Submersible sewage and drainage pumps in chrome-nickel stainless steel, with vertical delivery port.
**GXC:**with two-passage impeller.
**GXV:**with free-flow (vortex) impeller
2-pole induction motor, 50 Hz (n ≈ 2900 rpm).
**GXC, GXV:**three-phase 400 V +/-10%;
**GXCM, GXVM:**Single-phase 230 V +/-10% with float switch and thermal protector. Incorporated capacitor.
Float switch for automatic start and stop.
Cable length 10 m.
Liquid temperature up to 35° C.

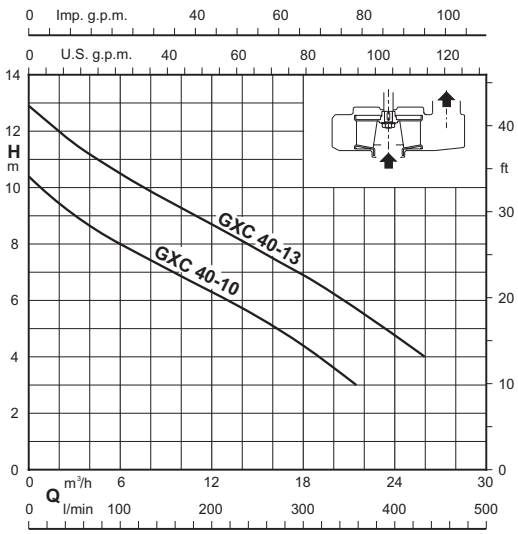


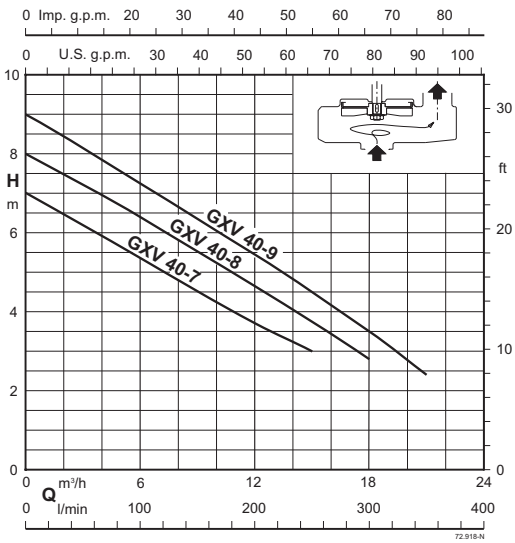

# GEO 230

## Pumps characteristics

GEO 230-GQG

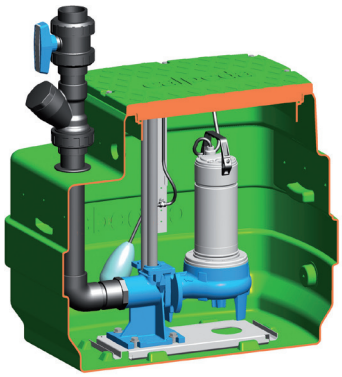

**Characteristics**
Dirty water collection and lifting station with GQG series grinder pumps.

**It includes:**
1 tank capacity 230 l
1 pump
- single-phase with 10 m cable without float switch
- - three-phase with 10 m cable
1 support kit with float switch
1 control box (with capacitor for single-phase motors)
1 duck foot coupling kit
1 discharge pipe kit Ø 63 mm in PVC with a ball valve and non-return ball valve

**On request:**
1 support kit with safety float switch and auto-supplied control panel for remote alarm with horn and flashing light
- extention 300 mm

| Type single-phase | 1 ~ 230 V | 1 ~ 230 V | Q max | H max |
|---|---|---|---|---|
| | kW | A | m3/h | m |
| GEO 230-GQGM 6-18 | 0,9 | 7 | 13,2 | 16,5 |
| GEO 230-GQGM 6-21 | 1,1 | 7,5 | 15 | 19,2 |
| GEO 230-GQGM 6-25 | 1,5 | 9,5 | 16,8 | 23 |

| Type three-phase | 3 ~ 400 V | 3 ~ 400 V | Q max | H max |
|---|---|---|---|---|
| | kW | A | m3/h | m |
| GEO 230-GQG 6-18 | 0,9 | 2.3 | 13,2 | 16,5 |
| GEO 230-GQG 6-21 | 1,1 | 2.8 | 15 | 19,2 |
| GEO 230-GQG 6-25 | 1,5 | 3.8 | 16,8 | 23 |

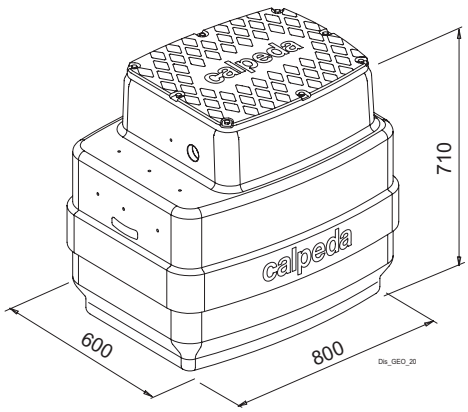


**GQG**
Submersible pumps with high power grinder, with horizontal delivery port.
**GQG:**with grinding system.
2-pole induction motor, 50 Hz (n ≈ 2900 rpm).
**GQG:**three-phase 400 V +/-10%;
**GQGM:**single-phase 230V ± 10% complete with control panel with thermal protection and starting capacitors (without float).
Cable length 10 m.
Liquid temperature up to 35° C.

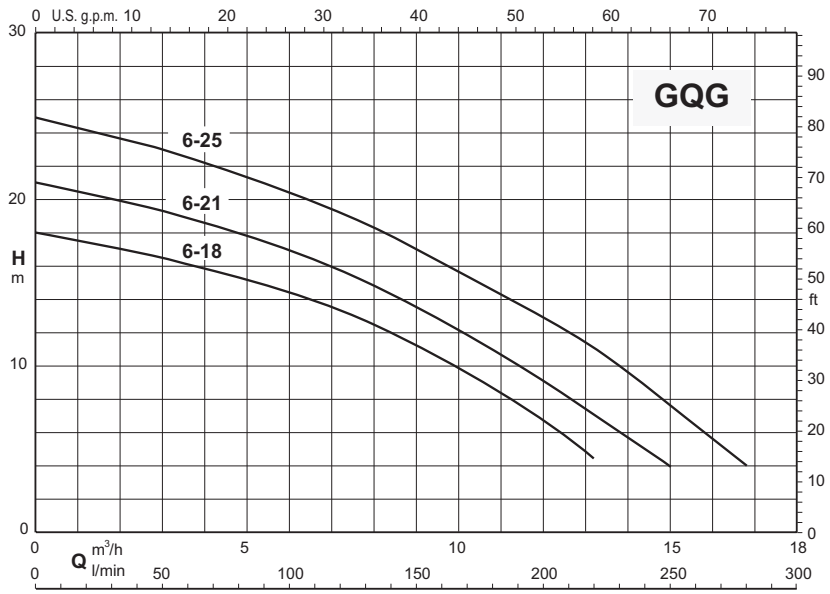

# GEO 230

## Pumps characteristics

GEO 230-GQS 40

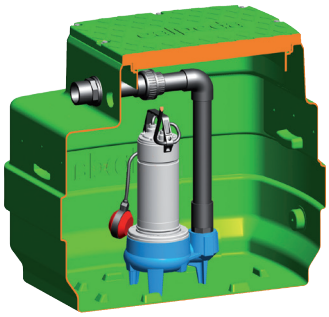

GEO 230-GQS 50

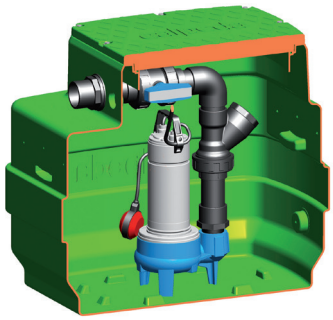

**Characteristics**
Dirty water collection and lifting station with GQS series pumps.

**It includes:**
1 tank capacity 230 l
1 pump
- - single-phase with 10 m cable and float switch
- - three-phase with 10 m cable with support and float switch kit
1 control box for three-phase version
For GQS 40: 1 x Ø 50 mm PVC drainage pipe kit
For GQS 50: 1 x Ø 63 mm PVC drainage pipe kit with ball valve and ball non-return valve

**On request:**
For GQS 40: 1 x Ø 50 mm PVC drainage pipe kit with ball valve and ball non-return valve
1 safety float switch (with support for single-phase version) and autosupplied control panel for remote alarm with horn and flashing light
- extention 300 mm

| Type single-phase | 1 ~ 230 V | 1 ~ 230 V | Q max | H max |
|---|---|---|---|---|
| | kW | A | m3/h | m |
| GEO 230-GQSM 40-9 | 0.45 | 4.5 | 21 | 8.8 |
| GEO 230-GQSM 50-8 | 0,55 | 4,3 | 24 | 7,4 |
| GEO 230-GQSM 50-9 | 0,75 | 4,8 | 27 | 8,8 |
| GEO 230-GQSM 50-11 | 0,9 | 6,6 | 33 | 10,5 |
| GEO 230-GQSM 50-13 | 1,1 | 8,4 | 36 | 12,5 |
| GEO 230-GQSM 50-15 | 1,5 | 13 | 36 | 14,4 |

| Type three-phase | 3 ~ 400 V | 3 ~ 400 V | Q max | H max |
|---|---|---|---|---|
| | kW | A | m3/h | m |
| GEO 230-GQS 40-9 | 0.45 | 1.6 | 21 | 8.8 |
| GEO 230-GQS 50-8 | 0,55 | 1.5 | 24 | 7,4 |
| GEO 230-GQS 50-9 | 0,75 | 1.8 | 27 | 8,8 |
| GEO 230-GQS 50-11 | 0,9 | 2.3 | 33 | 10,5 |
| GEO 230-GQS 50-13 | 1,1 | 3 | 36 | 12,5 |
| GEO 230-GQS 50-15 | 1,5 | 4 | 36 | 14,4 |

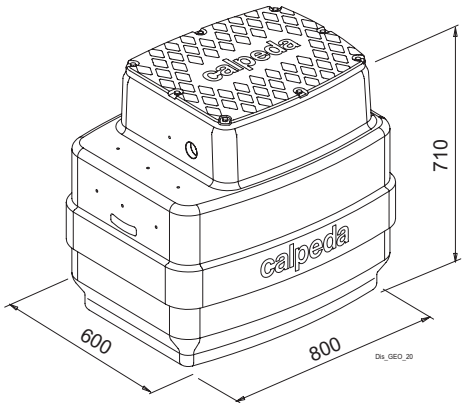


**GQS**
Single-impeller submersible pumps, with vertical delivery port.
**GQS:**with free-flow (vortex) impeller
2-pole induction motor, 50 Hz (n ≈ 2900 rpm).
**GQS:**three-phase 400 V +/-10%;
**GQSM:**Single-phase 230 V +/-10% with float switch and thermal protector. Incorporated capacitor.
Cable length 10 m.
Liquid temperature up to 35° C.

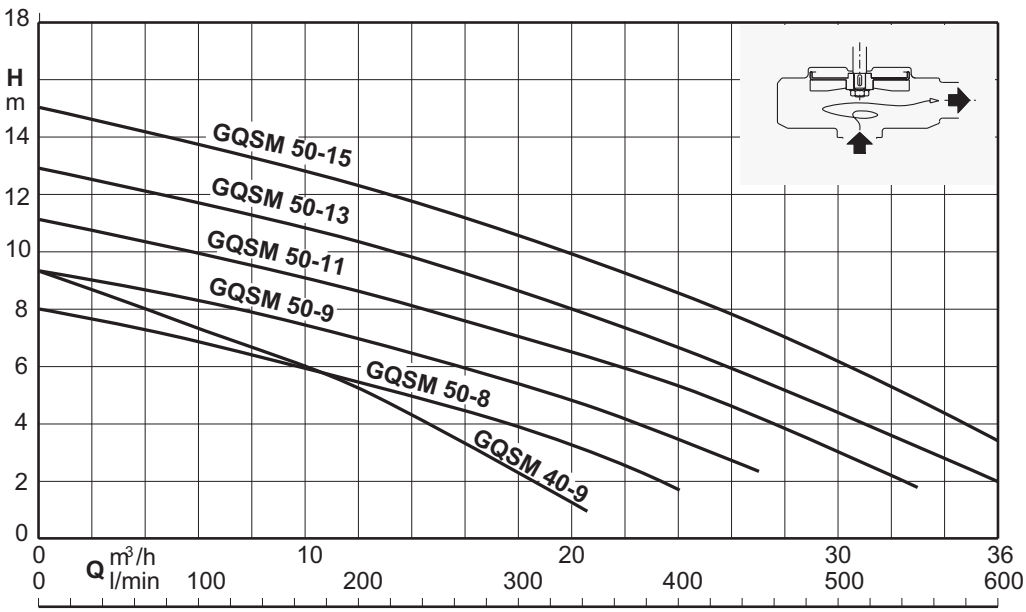

# GEO 230

## Pumps characteristics

GEO 230-GQN

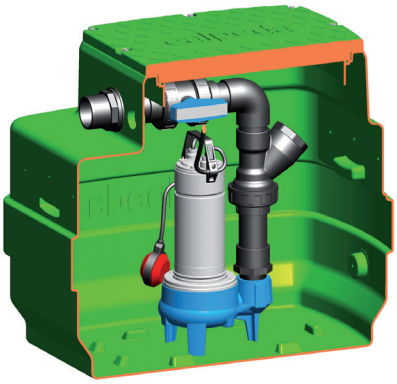

**Characteristics**
Dirty water collection and lifting station with GQN series pumps.

**It includes:**
1 tank capacity 230 l
1 pump
- single-phase with 10 m cable, with float
- - three-phase with 10 m cable with support and float switch kit
1 support kit with float switch
1 control box for three-phase version
1 discharge pipe kit Ø 63 mm in PVC with a ball valve and non-return ball valve

**On request:**
1 support kit with safety float switch and auto-supplied control panel for remote alarm with horn and flashing light
- extention 300 mm

| Type single-phase | 1 ~ 230 V | 1 ~ 230 V | Q max | H max |
|---|---|---|---|---|
| | kW | A | m3/h | m |
| GEO 230-GQNM 50-13 | 0,9 | 6,6 | 36 | 11,6 |
| GEO 230-GQNM 50-15 | 1,1 | 8,4 | 42 | 13,5 |
| GEO 230-GQNM 50-17 | 1,5 | 12 | 48 | 15,7 |

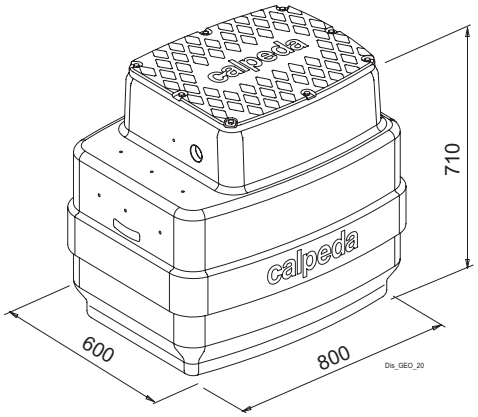


| Type three-phase | 3 ~ 400 V | 3 ~ 400 V | Q max | H max |
|---|---|---|---|---|
| | kW | A | m3/h | m |
| GEO 230-GQN 50-13 | 0,9 | 2,3 | 36 | 11,6 |
| GEO 230-GQN 50-15 | 1,1 | 3,3 | 42 | 13,5 |
| GEO 230-GQN 50-17 | 1,5 | 4,5 | 48 | 15,7 |

**GQN**
Single-impeller submersible pumps, with vertical delivery port.
**GQN:**with two-passage impeller.
2-pole induction motor, 50Hz (n ≈ 2900 rpm)
**GQN:**three-phase 400 V +/-10%;
**GQNM:**Single-phase 230 V +/-10% with float switch and thermal protector. Incorporated capacitor.
Cable length 10 m.
Liquid temperature up to 35° C.

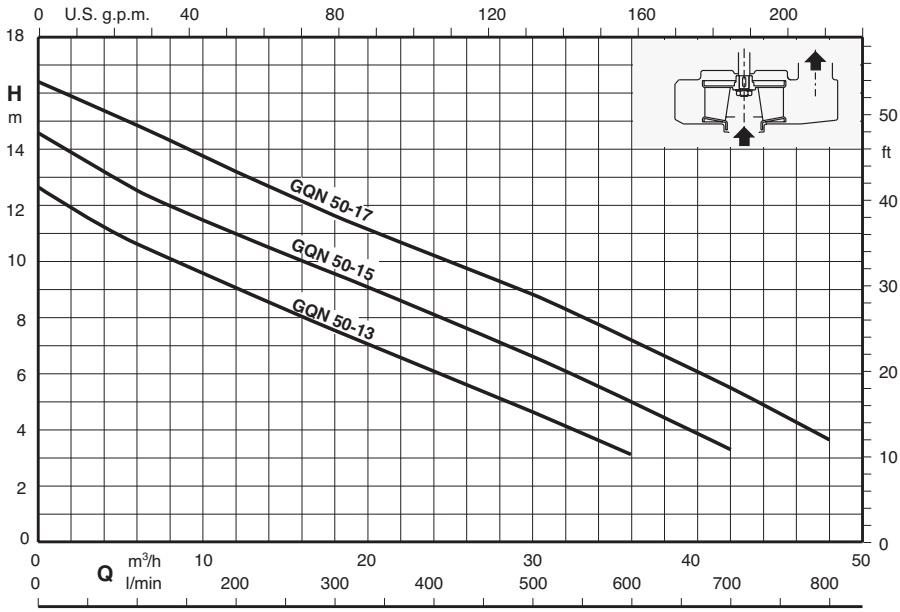

# GEO 230

## Pumps characteristics

GEO 230-GQV

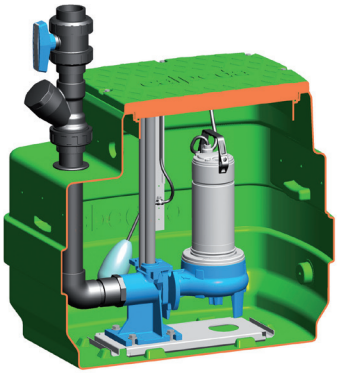

**Characteristics**
Dirty water collection and lifting station with GQV series pumps.

**It includes:**
1 tank capacity 230 l
1 pump
- single-phase with 10 m cable without float switch
- - three-phase with 10 m cable
1 support kit with float switch
1 control box
1 duck foot coupling kit
1 discharge pipe kit Ø 63 mm in PVC with a ball valve and non-return ball valve

**On request:**
1 safety float switch (with support for single-phase version) and autosupplied control panel for remote alarm with horn and flashing light
- extention 300 mm

| Type single-phase | 1 ~ 230 V | 1 ~ 230 V | Q max | H max |
|---|---|---|---|---|
| | kW | A | m3/h | m |
| GEO 230-GQVM 50-8 | 0,55 | 4,3 | 24 | 7,4 |
| GEO 230-GQVM 50-9 | 0,75 | 4,8 | 27 | 8,8 |
| GEO 230-GQVM 50-11 | 0,9 | 6,6 | 33 | 10,5 |
| GEO 230-GQVM 50-13 | 1,1 | 8,4 | 36 | 12,5 |
| GEO 230-GQVM 50-15 | 1,5 | 13 | 36 | 14,4 |

| Type three-phase | 3 ~ 400 V | 3 ~ 400 V | Q max | H max |
|---|---|---|---|---|
| | kW | A | m3/h | m |
| GEO 230-GQV 50-8 | 0,55 | 1.5 | 24 | 7,4 |
| GEO 230-GQV 50-9 | 0,75 | 1.8 | 27 | 8,8 |
| GEO 230-GQV 50-11 | 0,9 | 2.3 | 33 | 10,5 |
| GEO 230-GQV 50-13 | 1,1 | 3 | 36 | 12,5 |
| GEO 230-GQV 50-15 | 1,5 | 4 | 36 | 14,4 |

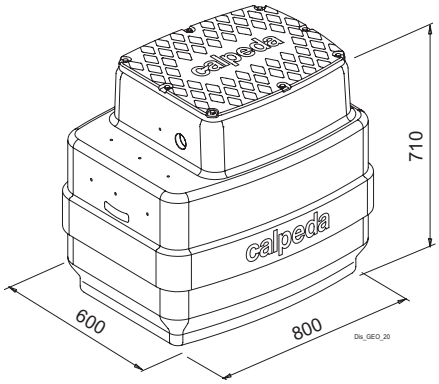


**GQV**
Single-impeller submersible pumps, with horizontal delivery port.
**GQV:**with free-flow (vortex) impeller
2-pole induction motor, 50 Hz (n ≈ 2900 rpm).
**GQV:**three-phase 400 V +/-10%;
**GQVM:**single-phase 230 V +/-10%, with thermal protector, with built-in capacitor (without float switch).
Cable length 10 m.
Liquid temperature up to 35° C.

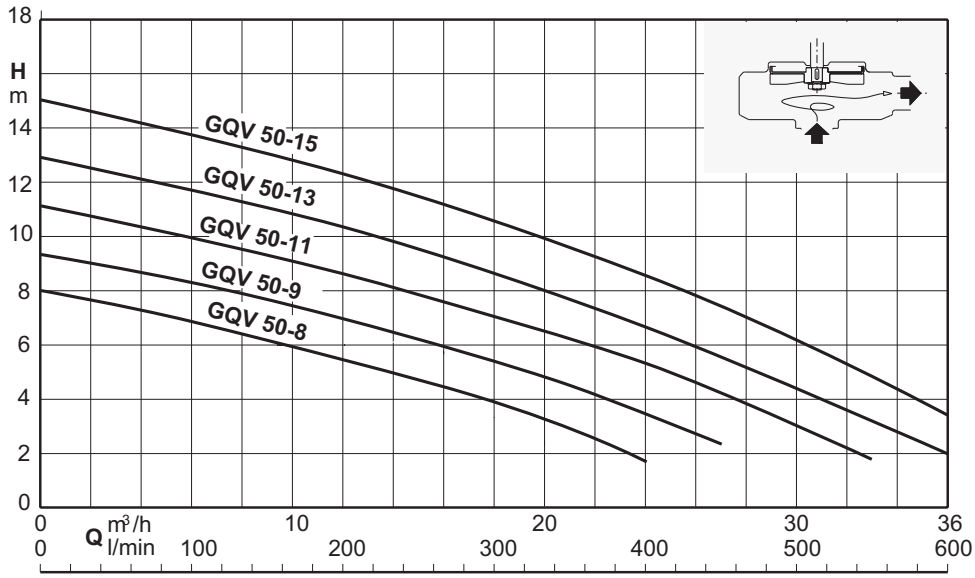

# GEO 230

## Pumps characteristics

GEO 230-GM..

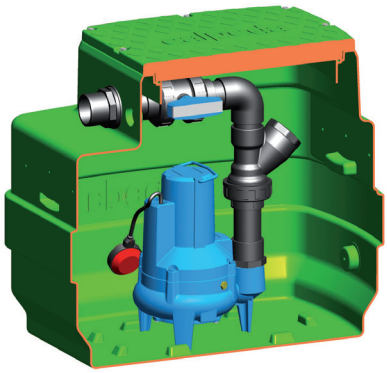

**Characteristics**
Dirty water collection and lifting station with GMV GMC series pumps.

**It includes:**
1 tank capacity 230 l
1 pump
- - single-phase with 10 m cable and float switch
- three-phase with 10 m cable with rod kit and float
1 control box for three-phase version
1 discharge pipe kit Ø 63 mm in PVC with a ball valve and non-return ball valve

**On request:**
1 support kit with safety float switch and auto-supplied control panel for remote alarm with horn and flashing light
- extention 300 mm

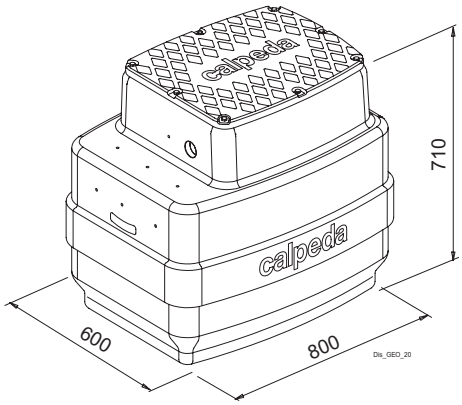


| Type single-phase | 1 ~ 230 V | 1 ~ 230 V | Q max | H max |
|---|---|---|---|---|
| | kW | A | m3/h | m |
| GEO 230-GMCM 50CE | 0,75 | 4,5 | 36 | 9,5 |
| GEO 230-GMCM 50BE | 1,1 | 6,5 | 42 | 12,5 |
| GEO 230-GMVM50CE | 0,75 | 4,5 | 31 | 8 |
| GEO 230-GMVM 50BE | 1,1 | 6,5 | 35 | 9,5 |

| Type three-phase | 3 ~ 400 V | 3 ~ 400 V | Q max | H max |
|---|---|---|---|---|
| | kW | A | m3/h | m |
| GEO 230-GMC 50CE | 0,75 | 1,9 | 36 | 9,5 |
| GEO 230-GMC 50BE | 1,1 | 2,K7 | 42 | 12,5 |
| GEO 230-GMC 50AE | 1,5 | 3,8 | 48 | 14,5 |
| GEO 230-GMV 50CE | 0,75 | 1,9 | 31 | 8 |
| GEO 230-GMV 50BE | 1,1 | 2,7 | 35 | 9,5 |
| GEO 230-GMV 50AE | 1,5 | 3,8 | 39 | 11,5 |

**GMC, GMV**
Submersible sewage and drainage pumps.
**GMC:**with single-channel impeller.
**GMV:**with free-flow (vortex) impeller
2-pole induction motor, 50 Hz (n ≈ 2900 rpm).
**GMC, GMV:**three-phase 400 V +/-10%; with 2 built-in thermal protectors to be connected to the control panel.
**GMCM, GMVM:**single-phase 230 V ± 10%, built-in thermal protector and built-in capacitor.Float switch for automatic operation.
Cable length 10 m.
Liquid temperature up to 35° C.

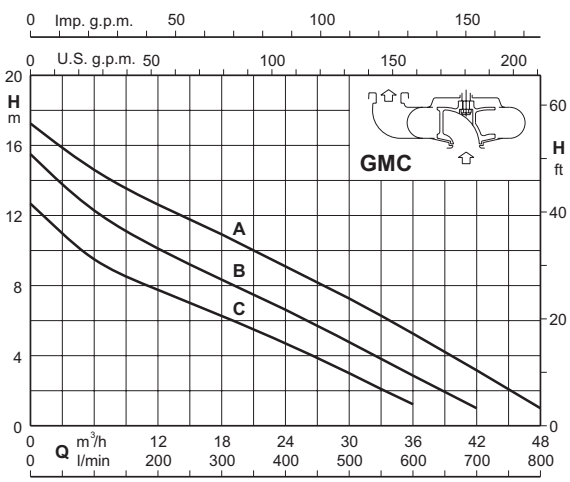


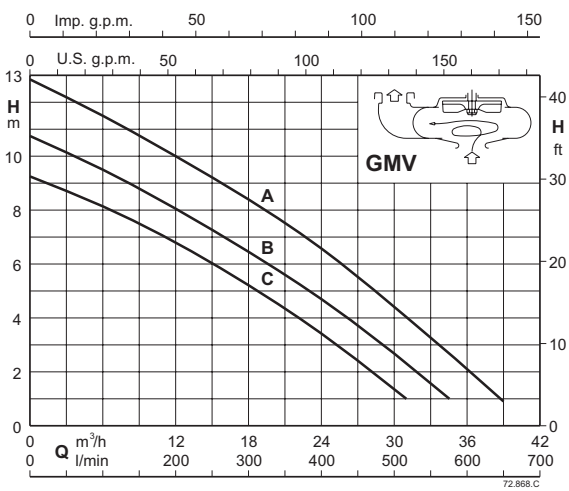

# GEO 230

## Pumps characteristics

GEO 230-GM..

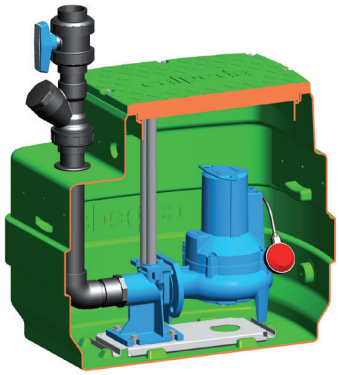

**Characteristics**
Dirty water collection and lifting station with GMV GMC series pumps.

**It includes:**
1 tank capacity 230 l
1 pump
- single-phase with 10 m cable and float
- three-phase with 10 m cable with rod kit and float

1 control box for three-phase version
1 duck foot coupling kit
1 discharge pipe kit Ø 63 mm in PVC with a ball valve and non-return ball valve

**On request:**
1 support kit with safety float switch and auto-supplied control panel for remote alarm with horn and flashing light
- extention 300 mm

| Type single-phase | 1 ~ 230 V | 1 ~ 230 V | Q max | H max |
|---|---|---|---|---|
| | kW | A | m3/h | m |
| GEO 230-GMCM 50-65C | 0,75 | 4,5 | 36 | 9,5 |
| GEO 230-GMCM 5065B | 1,1 | 6,5 | 42 | 12,5 |
| GEO 230-GMVM50-65C | 0,75 | 4,5 | 31 | 8 |
| GEO 230-GMVM 50-65B | 1,1 | 6,5 | 35 | 9,5 |

| Type three-phase | 3 ~ 400 V | 3 ~ 400 V | Q max | H max |
|---|---|---|---|---|
| | kW | A | m3/h | m |
| GEO 230-GMC 50-65C | 0,75 | 1,9 | 36 | 9,5 |
| GEO 230-GMC 50-65B | 1,1 | 2.7 | 42 | 12,5 |
| GEO 230-GMC 50-65A | 1,5 | 3,8 | 48 | 14,5 |
| GEO 230-GMV 50-65C | 0,75 | 1,9 | 31 | 8 |
| GEO 230-GMV 50-65B | 1,1 | 2,7 | 35 | 9,5 |
| GEO 230-GMV 50-65C | 1,5 | 3,8 | 39 | 11,5 |

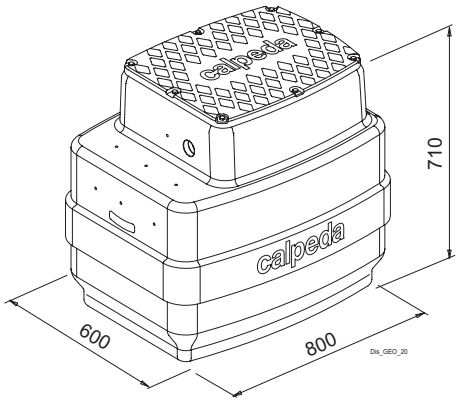


**GMC, GMV**
Submersible sewage and drainage pumps.
**GMC:**with single-channel impeller.
**GMV:**with free-flow (vortex) impeller
2-pole induction motor, 50 Hz (n ≈ 2900 rpm).
**GMC, GMV:**three-phase 400 V +/-10%; with 2 built-in thermal protectors to be connected to the control panel.
**GMCM, GMVM:**single-phase 230 V ± 10%, built-in thermal protector and built-in capacitor.Float switch for automatic operation.
Cable length 10 m.
Liquid temperature up to 35° C.

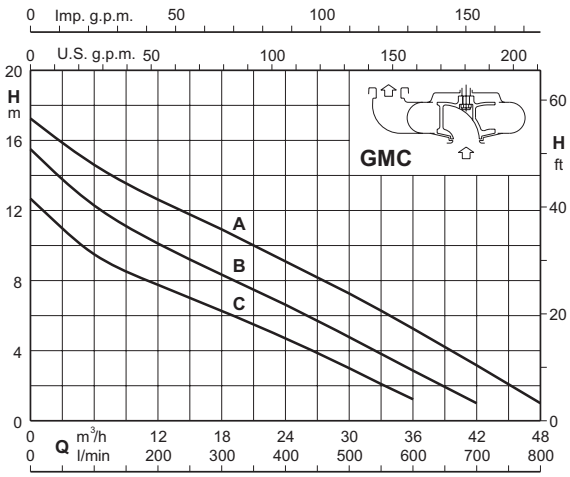


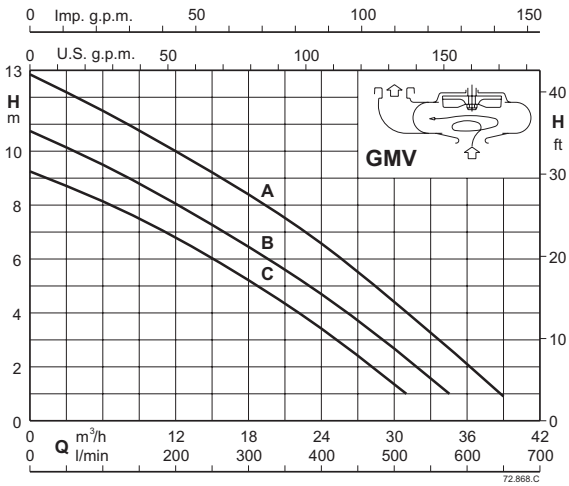

# GEO 230

## Pumps characteristics

GEO 230-GQS 40

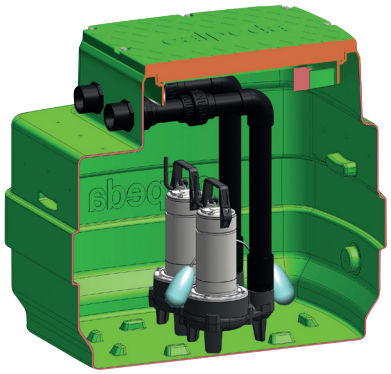

**Characteristics**
Dirty water collection and lifting station with GQS 40-9 series pumps.

**It includes:**
1 tank capacity 230 l
2 pump
- single-phase with 10 m cable without float switch
- - three-phase with 10 m cable
1 support kit with 2 float switch
1 control box
4 x Ø 50 mm PVC drainage pipe kit

**On request:**
4 x Ø 50 mm PVC drainage pipe kit with ball valve and ball non-return valves
1 safety float switch (with support for single-phase version) and autosupplied control panel for remote alarm with horn and flashing light
- extention 300 mm

| Type single-phase | 1 ~ 230 V | 1 ~ 230 V | Q max | H max |
|---|---|---|---|---|
| | kW | A | m3/h | m |
| GEO 230-2GQSM 40-9 | 0,45x2 | 4,5x2 | 21x2 | 8.8 |

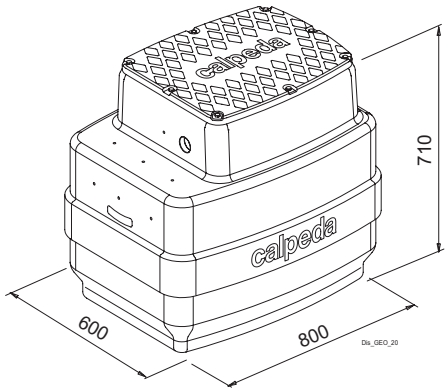


| Type three-phase | 3 ~ 400 V | 3 ~ 400 V | Q max | H max |
|---|---|---|---|---|
| | kW | A | m3/h | m |
| GEO 230-2GQS 40-9 | 0,45x2 | 1,6x2 | 21x2 | 8.8 |

**GQS**
Single-impeller submersible pumps, with vertical delivery port.
**GQS:**with free-flow (vortex) impeller
2-pole induction motor, 50 Hz (n ≈ 2900 rpm).
**GQS:**three-phase 400 V +/-10%;
**GQSM:**single-phase 230 V +/-10%, with thermal protector, with built-in capacitor (without float switch).
Cable length 10 m.
Liquid temperature up to 35° C.

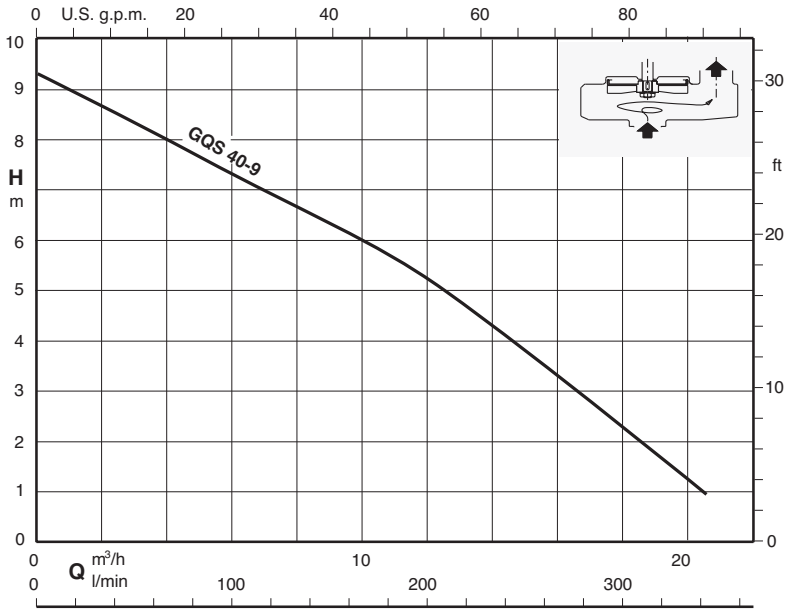

# GEO 500

## Pumps characteristics

GEO 500-GX..

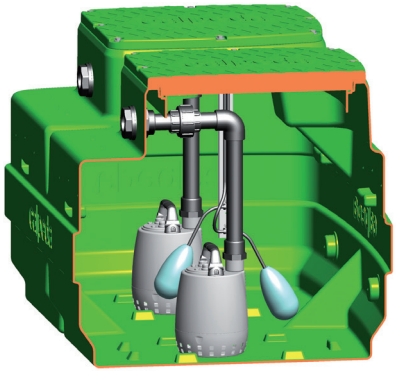

**Characteristics**
Automatic collecting and lifting station
- for clean water with GXR pump series
- - for waste water with GXV pump series.

**It includes:**
1 tank capacity 500 l
2 single-phase pump with 5 m cable without float switch
1 support kit with 2 float switch
1 control box
2 discharge pipe kit Ø 40 mm in PVC

On request:
- 2 single-phase pumps with 10 m cable, without floats
2 discharge pipe kit Ø 40 mm in PVC with a ball valve and non-return ball valve
1 safety float switch and auto-supplied control panel for remote alarm with horn and flashing light
- extention 300 mm

| Type single-phase | 1 ~ 230 V | 1 ~ 230 V | Q max | H max |
|---|---|---|---|---|
| | kW | A | m3/h | m |
| GEO 500-2GXVM 25-6 | 0,25x2 | 2,5x2 | 10,2x2 | 5,7 |
| GEO 500-2GXVM 25-8 | 0,37x2 | 3,5x2 | 12x2 | 7,8 |
| GEO 500-2GXVM 25-10 | 0.45x2 | 4,5x2 | 13,2x2 | 9,5 |
| GEO 500-2GXRM 9 | 0,25x2 | 2,5x2 | 10,2x2 | 8,3 |
| GEO 500-2GXRM 11 | 0,37x2 | 3,5x2 | 12x2 | 10,4 |
| GEO 500-2GXVM 13 | 0.45x2 | 4,5x2 | 13,2x2 | 11,7 |

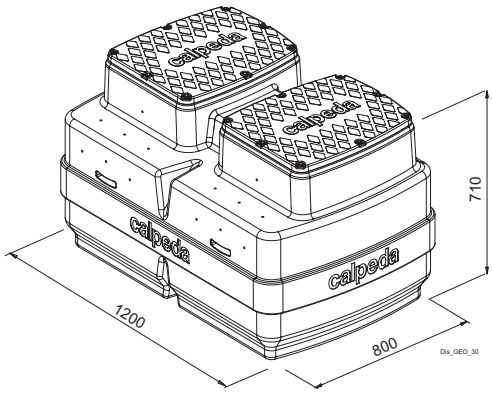

**GXRM, GXVM**
Submersible drainage pumps made of chrome-nickel stainless steel, with vertical delivery port.
**GXRM:**with open impeller.
**GXVM:**with free-flow (vortex) impeller
2-pole induction motor, 50 Hz (n ≈ 2900 1/min), single-phase 230V ± 10% with thermal protector and built-in capacitor (without float).
5 m cable and control box with capacitor.
Liquid temperature up to 35° C.

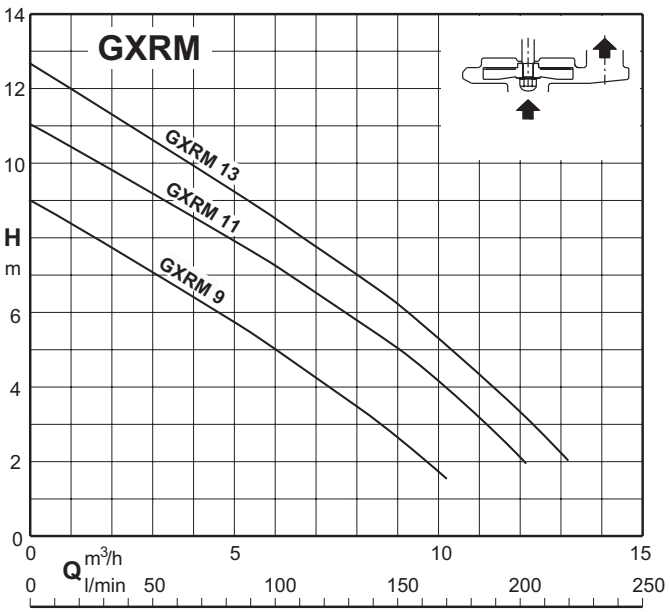


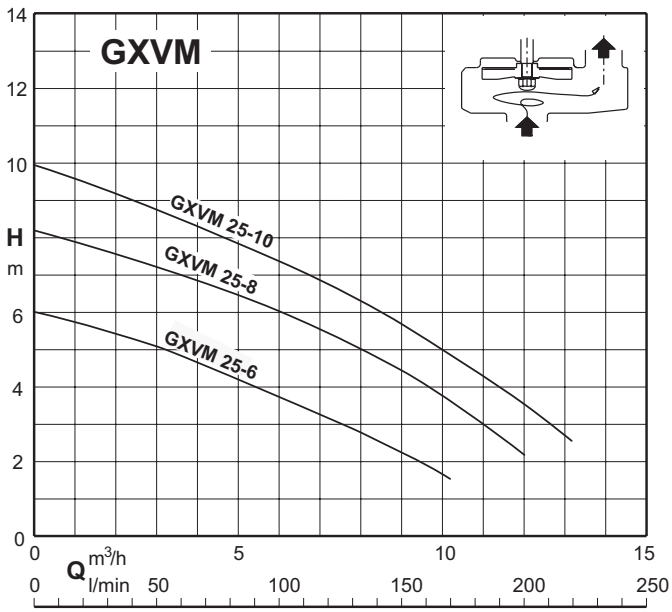

# GEO 500

## Pumps characteristics

GEO 500-GQR

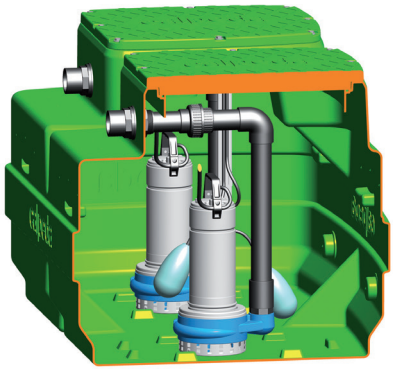

**Characteristics**
Automatic collecting and lifting station for clean water with GQR pump series.

**It includes:**
1 tank capacity 500 l
2 pump
- single-phase with 10 m cable without float switch
- - three-phase with 10 m cable
1 support kit with 2 float switch
1 control box
- 2 x 50 mm diameter PVC drainage pipe kits

On request:
- 2 x 50 mm diameter PVC drainage pipe kits with ball valves and ball non-return valves
1 safety float switch and auto-supplied control panel for remote alarm with horn and flashing light
- extention 300 mm

| Type single-phase | 1 ~ 230 V | 1 ~ 230 V | Q max | H max |
|---|---|---|---|---|
| | kW | A | m3/h | m |
| GEO 500-2GQRM 10-10 | 0,45x2 | 3,1x2 | 18x2 | 9,5 |
| GEO 500-2GQRM 10-12 | 0,55x2 | 3,6x2 | 21x2 | 11,6 |
| GEO 500-2GQRM 10-14 | 0,75x2 | 4,6x2 | 24x2 | 13,5 |
| GEO 500-2GQRM 10-16 | 0,9x2 | 6x2 | 27x2 | 15,5 |
| GEO 500-2GQRM 10-18 | 1,1x2 | 8x2 | 30x2 | 17,5 |
| GEO 500-2GQRM 10-20 | 1,5x2 | 13x2 | 30x2 | 19,5 |

| Type three-phase | 3 ~ 400 V | 3 ~ 400 V | Q max | H max |
|---|---|---|---|---|
| | kW | A | m3/h | m |
| GEO 500-2GQR 10-10 | 0,45x2 | 1,2x2 | 18x2 | 9,5 |
| GEO 500-2GQR 10-12 | 0,55x2 | 1,4x2 | 21x2 | 11,6 |
| GEO 500-2GQR 10-14 | 0,75x2 | 1,6x2 | 24x2 | 13,5 |
| GEO 500-2GQR 10-16 | 0,9x2 | 2,3x2 | 27x2 | 15,5 |
| GEO 500-2GQR 10-18 | 1,1x2 | 2,8x2 | 30x2 | 17,5 |
| GEO 500-2GQR 10-20 | 1,5x2 | 3,8x2 | 30x2 | 19,5 |

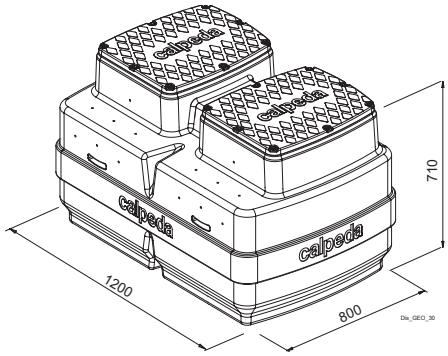


**GQR**
Single-impeller submersible drainage pump, with vertical delivery port.
**GQR:**with open impeller.
2-pole induction motor, 50 Hz (n ≈ 2900 1/min)
**GQR:**three-phase 400 V +/-10%;
**GQRM:**single-phase 230 V +/-10%, with thermal protector, with built-in capacitor (without float switch).
Cable length 10 m.
Liquid temperature up to 35° C.

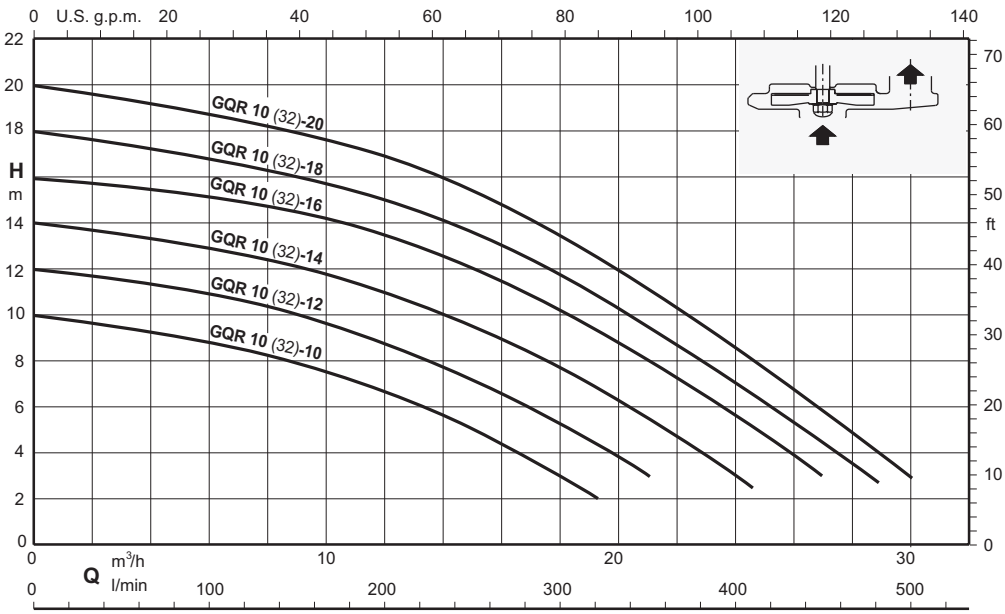

# GEO 500

## Pumps characteristics

GEO 500-GQR

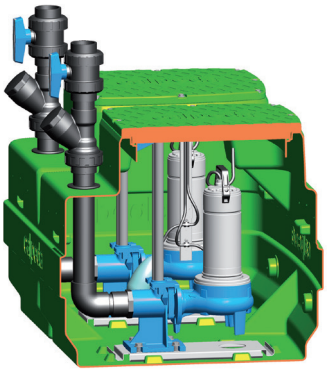

**Characteristics**
Automatic collecting and lifting station for clean water with GQR pump series.

**It includes:**
1 tank capacity 500 l
2 pump
- single-phase with 10 m cable without float switch
- - three-phase with 10 m cable

1 support kit with 2 float switch
1 control box
2 duck foot coupling kit
2 discharge pipe kit Ø 63 mm in PVC with a ball valve and non-return ball valve

On request:
1 safety float switch and auto-supplied control panel for remote alarm with horn and flashing light
- extention 300 mm

| Type single-phase | 1 ~ 230 V | 1 ~ 230 V | Q max | H max |
|---|---|---|---|---|
| | kW | A | m3/h | m |
| GEO 500-2GQRM 10 32-10 | 0,45x2 | 3,1x2 | 18x2 | 9,5 |
| GEO 500-2GQRM 10 32-12 | 0,55x2 | 3,6x2 | 21x2 | 11,6 |
| GEO 500-2GQRM 10 32-14 | 0,75x2 | 4,6x2 | 24x2 | 13,5 |
| GEO 500-2GQRM 10 32-16 | 0,9x2 | 6x2 | 27x2 | 15,5 |
| GEO 500-2GQRM 10 32-18 | 1,1x2 | 8x2 | 30x2 | 17,5 |
| GEO 500-2GQRM 10 32-20 | 1,5x2 | 13x2 | 30x2 | 19,5 |

| Type three-phase | 3 ~ 400 V | 3 ~ 400 V | Q max | H max |
|---|---|---|---|---|
| | kW | A | m3/h | m |
| GEO 500-2GQR 10 32-10 | 0,45x2 | 1,2x2 | 18x2 | 9,5 |
| GEO 500-2GQR 10 32-12 | 0,55x2 | 1,4x2 | 21x2 | 11,6 |
| GEO 500-2GQR 10 32-14 | 0,75x2 | 1,6x2 | 24x2 | 13,5 |
| GEO 500-2GQR 10 32-16 | 0,9x2 | 2,3x2 | 27x2 | 15,5 |
| GEO 500-2GQR 10 32-18 | 1,1x2 | 2,8x2 | 30x2 | 17,5 |
| GEO 500-2GQR 10 32-20 | 1,5x2 | 3,8x2 | 30x2 | 19,5 |

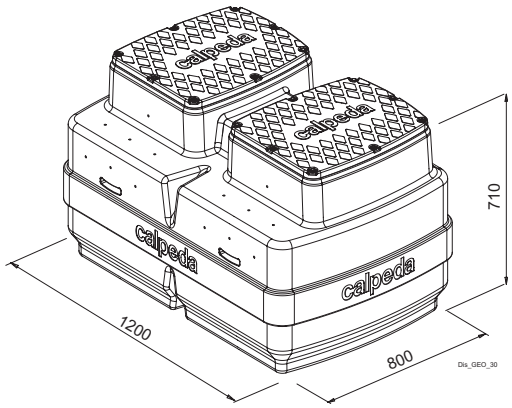


**GQR**
Submersible pumps with high power grinder, with horizontal delivery port.
**GQR:**with open impeller.
2-pole induction motor, 50 Hz (n ≈ 2900 1/min)
**GQR:**three-phase 400 V +/-10%;
**GQRM:**single-phase 230 V +/-10%, with thermal protector, with built-in capacitor (without float switch).
Cable length 10 m.
Liquid temperature up to 35° C.

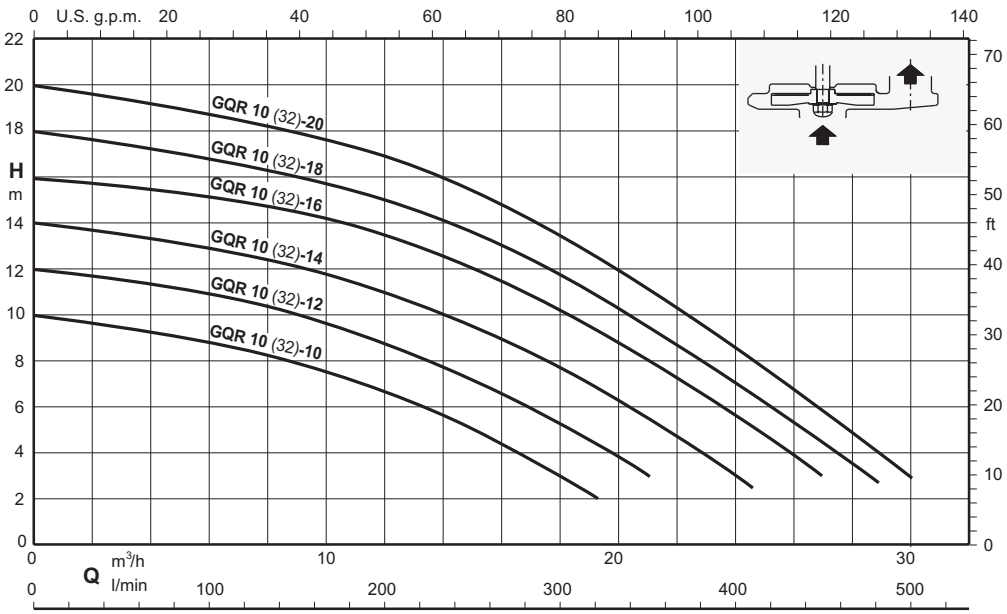

# GEO 500

## Pumps characteristics

GEO 500-GX..

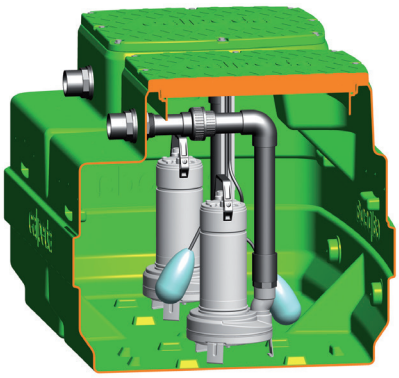

**Characteristics**
Clear water collection and lifting station with GX 40 series pumps.

**It includes:**
1 tank capacity 500 l
2 pump
- single-phase with 10 m cable without float switch
- - three-phase with 10 m cable
1 support kit with 2 float switch
1 control box
- 2 x 50 mm diameter PVC drainage pipe kits

On request:
- 2 x 50 mm diameter PVC drainage pipe kits with ball valves and ball non-return valves
1 safety float switch (with support for single-phase version) and autosupplied control panel for remote alarm with horn and flashing light
- extention 300 mm

| Type single-phase | 1 ~ 230 V | 1 ~ 230 V | Q max | H max |
|---|---|---|---|---|
| | kW | A | m3/h | m |
| GEO 500-2GXCM 40-10 | 0,55x2 | 4,6x2 | 21x2 | 9 |
| GEO 500-2GXCM 40-13 | 0,9x2 | 6,6x2 | 26x2 | 11,6 |
| GEO 500-2GXVM 40-7 | 0,55x2 | 4,6x2 | 15x2 | 6,2 |
| GEO 500-2GXVM 40-8 | 0,75x2 | 5,4x2 | 18x2 | 7,2 |
| GEO 500-2GXVM 40-9 | 0,9x2 | 6x2 | 21x2 | 8,1 |

| Type three-phase | 3 ~ 400 V | 3 ~ 400 V | Q max | H max |
|---|---|---|---|---|
| | kW | A | m3/h | m |
| GEO 500-2GXC 40-10 | 0,55x2 | 1,6x2 | 21x2 | 9 |
| GEO 500-2GXC 40-13 | 0,9x2 | 2,3x2 | 26x2 | 11,6 |
| GEO 500-2GXV 40-7 | 0,55x2 | 1,6x2 | 15x2 | 6,2 |
| GEO 500-2GXV 40-8 | 0,75x2 | 2,2x2 | 18x2 | 7,2 |
| GEO 500-2GXV 40-9 | 0,9x2 | 2,3x2 | 21x2 | 8,1 |

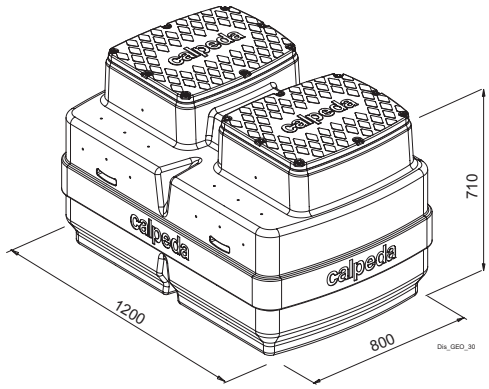


**GXC, GXV**
Submersible sewage and drainage pumps in chrome-nickel stainless steel, with vertical delivery port.
**GXC:**with two-passage impeller.
**GXV:**with free-flow (vortex) impeller
2-pole induction motor, 50 Hz (n ≈ 2900 rpm).
**GXC, GXV:**three-phase 400 V +/-10%;
**GXCM, GXVM:**single-phase 230V ± 10% with built-in thermal protector and capacitor (without float).
Float switch for automatic start and stop.
Cable length 10 m.
Liquid temperature up to 35° C.

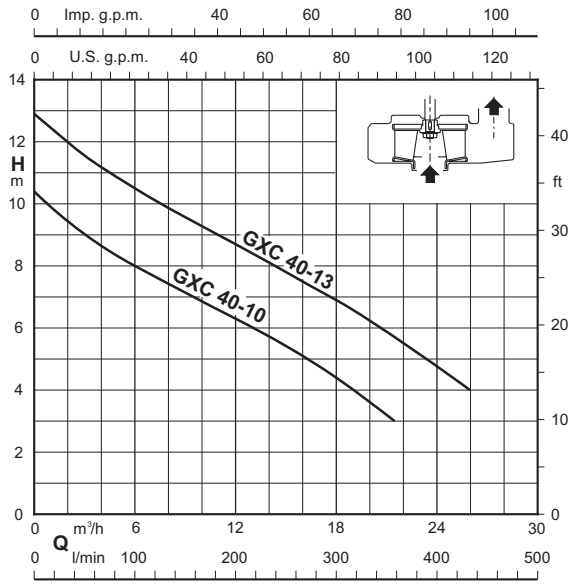


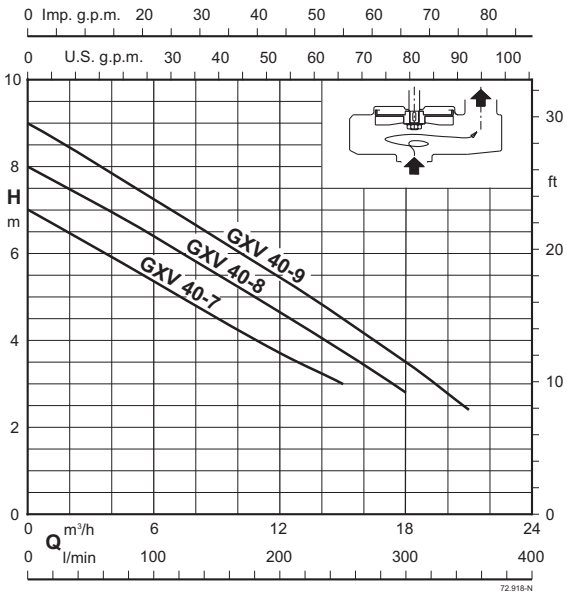

# GEO 500

## Pumps characteristics

GEO 500-GQG

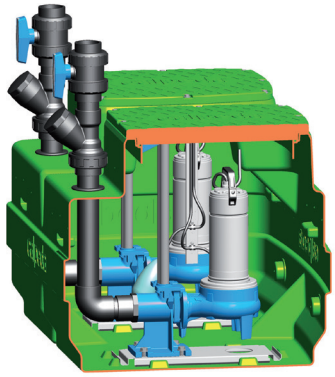

**Characteristics**
Sewage collection and lifting station with GQG series grinder pumps.

**It includes:**
1 tank capacity 500 l
2 pump
- single-phase with 10 m cable without float switch
- - three-phase with 10 m cable

1 support kit with 2 float switch
1 control box (with capacitor for single-phase motors)
2 duck foot coupling kit
2 discharge pipe kit Ø 63 mm in PVC with a ball valve and non-return ball valve

**On request:**
1 safety float switch (with support for single-phase version) and autosupplied control panel for remote alarm with horn and flashing light
- extention 300 mm

| Type single-phase | 1 ~ 230 V | 1 ~ 230 V | Q max | H max |
|---|---|---|---|---|
| | kW | A | m3/h | m |
| GEO 500-2GQGM 6-18 | 0,9x2 | 7x2 | 13,2x2 | 16,5 |
| GEO 500-2GQGM 6-21 | 1,1x2 | 7,5x2 | 15x2 | 19,2 |
| GEO 500-GQGM 6-25 | 1,5x2 | 9,5x2 | 16,8x2 | 23 |

| Type three-phase | 3 ~ 400 V | 3 ~ 400 V | Q max | H max |
|---|---|---|---|---|
| | kW | A | m3/h | m |
| GEO 500-2GQG 6-18 | 0,9x2 | 2,3x2 | 13,2x2 | 16,5 |
| GEO 500-2GQG 6-21 | 1,1x2 | 2,8x2 | 15x2 | 19,2 |
| GEO 500-2GQG 6-25 | 1,5x2 | 3,8x2 | 16,8x2 | 23 |

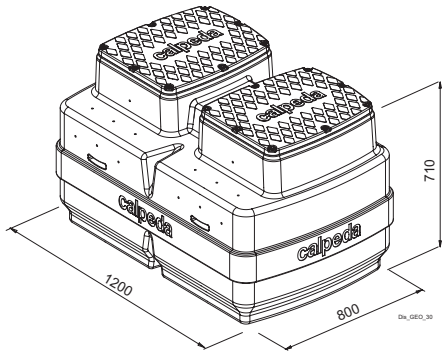


**GQG**
Submersible pumps with high power grinder, with horizontal delivery port.
**GQG:**with grinding system.
2-pole induction motor, 50 Hz (n ≈ 2900 rpm).
**GQG:**three-phase 400 V +/-10%;
**GQGM:**single-phase 230V ± 10% complete with control panel with thermal protection and starting capacitors (without float).
Cable length 10 m.
Liquid temperature up to 35° C.

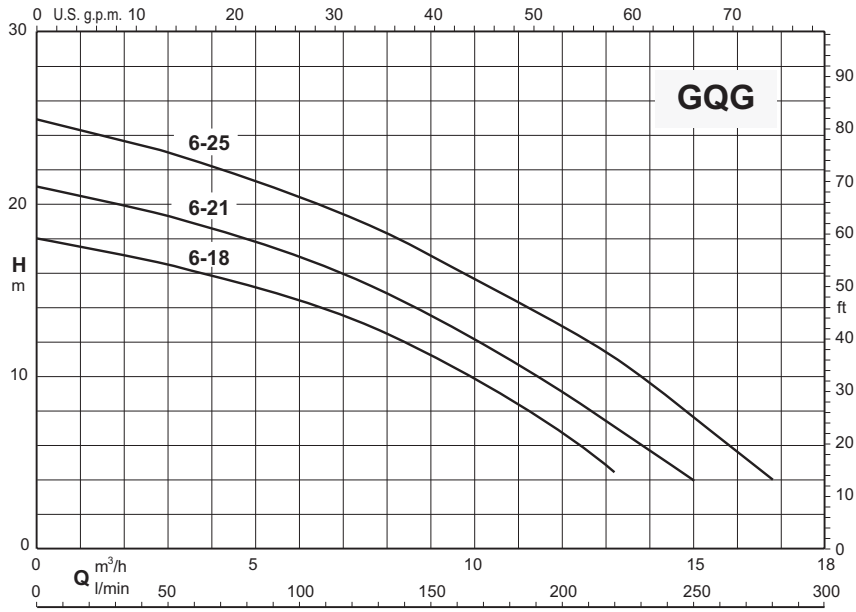

# GEO 500

## Pumps characteristics

GEO 500-GQS 40

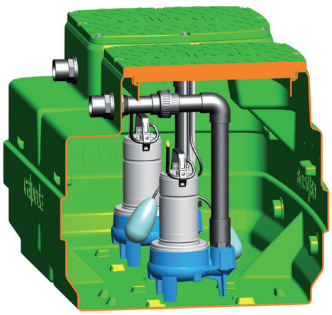

GEO 500-GQS 50

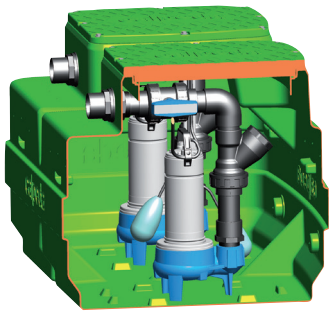

**Characteristics**
Dirty water collection and lifting station with GQS series pumps.

**It includes:**
1 tank capacity 500 l
2 pump
- single-phase with 10 m cable without float switch
- - three-phase with 10 m cable
1 support kit with 2 float switch
1 control box
- For GQS 40: 2 x Ø 50 mm PVC drainage pipe kit
- For GQS 50: 2 x Ø 63 mm PVC drainage pipe kit with ball valve and ball non-return valves

**On request:**
- For GQS 40: 2 x Ø 50 mm PVC drainage pipe kit with ball valve and ball non-return valves
1 safety float switch (with support for single-phase version) and autosupplied control panel for remote alarm with horn and flashing light
- extention 300 mm

| Type single-phase | 1 ~ 230 V | 1 ~ 230 V | Q max | H max |
|---|---|---|---|---|
| | kW | A | m3/h | m |
| GEO 500-2GQSM 40-9 | 0,45x2 | 4,5x2 | 21x2 | 8.8 |
| GEO 500-2GQSM 50-8 | 0,55x2 | 4,3x2 | 24x2 | 7,4 |
| GEO 500-2GQSM 50-9 | 0,75x2 | 4,8x2 | 27x2 | 8,8 |
| GEO 500-2GQSM 50-11 | 0,9x2 | 6,6x2 | 33x2 | 10,5 |
| GEO 500-2GQSM 50-13 | 1,1x2 | 8,4x2 | 36x2 | 12,5 |
| GEO 500-2GQSM 50-15 | 1,5x2 | 13x2 | 36x2 | 14,4 |

| Type three-phase | 3 ~ 400 V | 3 ~ 400 V | Q max | H max |
|---|---|---|---|---|
| | kW | A | m3/h | m |
| GEO 500-2GQS 40-9 | 0,45x2 | 1,6x2 | 21x2 | 8.8 |
| GEO 500-2GQS 50-8 | 0,55x2 | 1,5x2 | 24x2 | 7,4 |
| GEO 500-2GQS 50-9 | 0,75x2 | 1,8x2 | 27x2 | 8,8 |
| GEO 500-2GQS 50-11 | 0,9x2 | 2,3x2 | 33x2 | 10,5 |
| GEO 500-2GQS 50-13 | 1,1x2 | 3x2 | 36x2 | 12,5 |
| GEO 500-2GQS 50-15 | 1,5x2 | 4x2 | 36x2 | 14,4 |

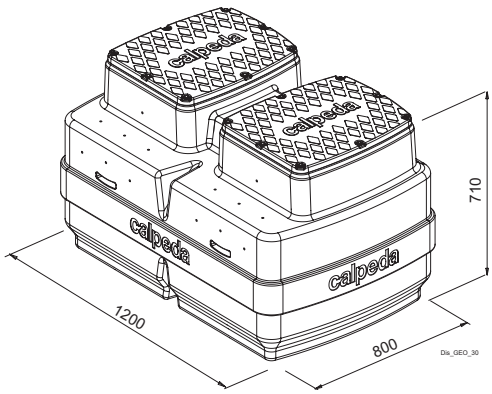


**GQS**
Single-impeller submersible pumps, with vertical delivery port.
**GQS:**with free-flow (vortex) impeller
2-pole induction motor, 50 Hz (n ≈ 2900 rpm).
**GQS:**three-phase 400 V +/-10%;
**GQSM:**single-phase 230 V +/-10%, with thermal protector, with built-in capacitor (without float switch).
Cable length 10 m.
Liquid temperature up to 35° C.

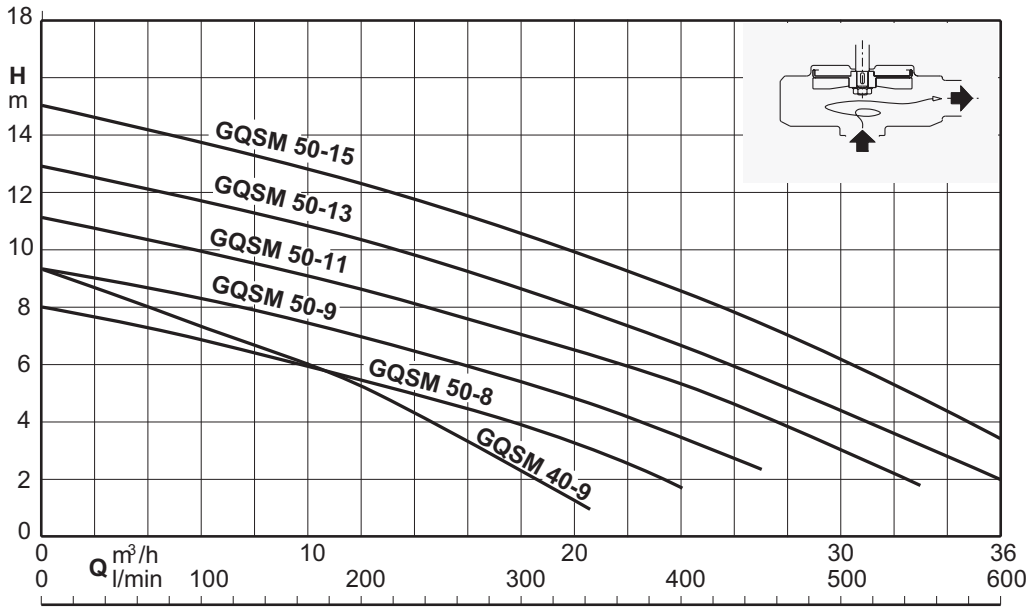

# GEO 500

## Pumps characteristics

GEO 500-GQN

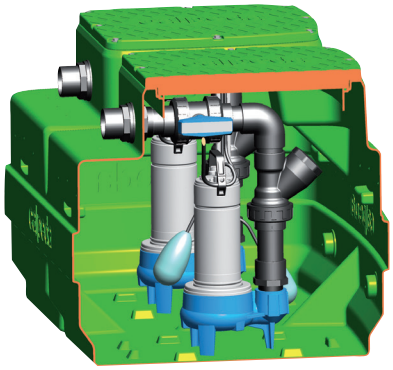

**Characteristics**
Dirty water collection and lifting station with GQN series pumps.

**It includes:**
1 tank capacity 500 l
2 pump
- single-phase with 10 m cable without float switch
- - three-phase with 10 m cable
1 support kit with 2 float switch
1 control box
2 discharge pipe kit Ø 63 mm in PVC with a ball valve and non-return ball valve

**On request:**
1 safety float switch (with support for single-phase version) and autosupplied control panel for remote alarm with horn and flashing light
- extention 300 mm

| Type single-phase | 1 ~ 230 V | 1 ~ 230 V | Q max | H max |
|---|---|---|---|---|
| | kW | A | m3/h | m |
| GEO 500-2GQNM 50-13 | 0,9x2 | 6,6x2 | 36x2 | 11,6 |
| GEO 500-2GQNM 50-15 | 1,1x2 | 8,4x2 | 42x2 | 13,5 |
| GEO 500-2GQNM 50-17 | 1,5x2 | 12x2 | 48x2 | 15,7 |

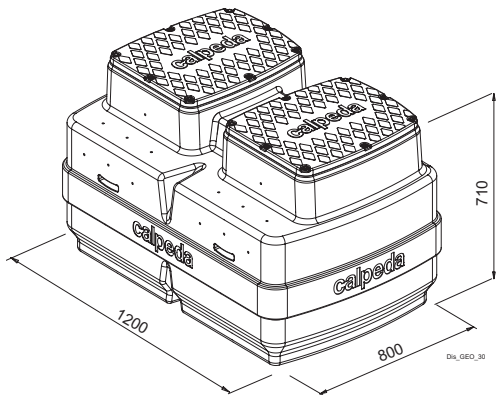


| Type three-phase | 3 ~ 400 V | 3 ~ 400 V | Q max | H max |
|---|---|---|---|---|
| | kW | A | m3/h | m |
| GEO 500-2GQN 50-13 | 0,9x2 | 2,3x2 | 36x2 | 11,6 |
| GEO 500-2GQN 50-15 | 1,1x2 | 3,3x2 | 42x2 | 13,5 |
| GEO 500-2GQN 50-17 | 1,5x2 | 4,5x2 | 48x2 | 15,7 |

**GQN**
Single-impeller submersible pumps, with vertical delivery port.
**GQN:**with two-passage impeller.
2-pole induction motor, 50Hz (n ≈ 2900 rpm)
**GQN:**three-phase 400 V +/-10%;
**GQNM:**single-phase 230 V +/-10%, with thermal protector, with built-in capacitor (without float switch).
Cable length 10 m.
Liquid temperature up to 35° C.

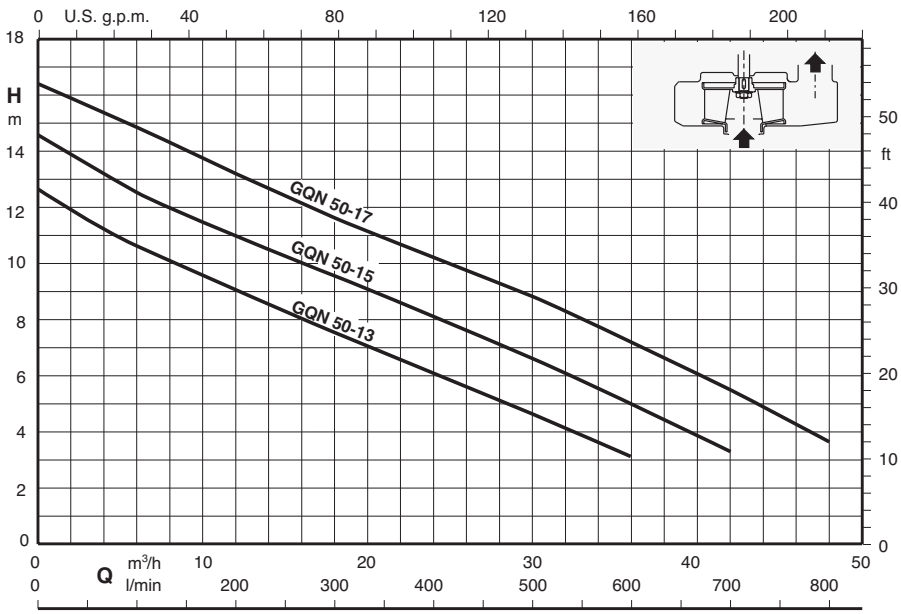

# GEO 500

## Pumps characteristics

GEO 500-GQV

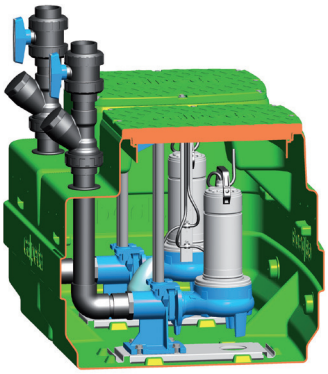

**Characteristics**
Dirty water collection and lifting station with GQV series pumps.

**It includes:**
1 tank capacity 500 l
2 pump
- single-phase with 10 m cable without float switch
- - three-phase with 10 m cable
1 support kit with 2 float switch
1 control box
2 duck foot coupling kit
2 discharge pipe kit Ø 63 mm in PVC with a ball valve and non-return ball valve

**On request:**
1 safety float switch (with support for single-phase version) and autosupplied control panel for remote alarm with horn and flashing light
- extention 300 mm

| Type single-phase | 1 ~ 230 V | 1 ~ 230 V | Q max | H max |
|---|---|---|---|---|
| | kW | A | m3/h | m |
| GEO 500-2GQVM 50-8 | 0,55x2 | 4,3x2 | 24x2 | 7,4 |
| GEO 500-2GQVM 50-9 | 0,75x2 | 4,8x2 | 27x2 | 8,8 |
| GEO 500-2GQVM 50-11 | 0,9x2 | 6,6x2 | 33x2 | 10,5 |
| GEO 500-2GQVM 50-13 | 1,1x2 | 8,4x2 | 36x2 | 12,5 |
| GEO 500-2GQVM 50-15 | 1,5x2 | 13x2 | 36x2 | 14,4 |

| Type three-phase | 3 ~ 400 V | 3 ~ 400 V | Q max | H max |
|---|---|---|---|---|
| | kW | A | m3/h | m |
| GEO 500-2GQV 50-8 | 0,55x2 | 1,5x2 | 24x2 | 7,4 |
| GEO 500-2GQV 50-9 | 0,75x2 | 1,8x2 | 27x2 | 8,8 |
| GEO 500-2GQV 50-11 | 0,9x2 | 2,3x2 | 33x2 | 10,5 |
| GEO 500-2GQV 50-13 | 1,1x2 | 3x2 | 36x2 | 12,5 |
| GEO 500-2GQV 50-15 | 1,5x2 | 4x2 | 36x2 | 14,4 |

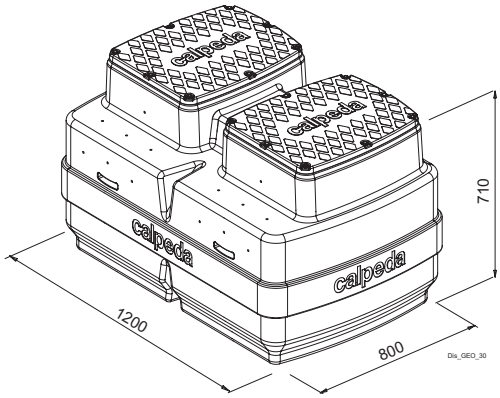


**GQV**
Single-impeller submersible pumps, with horizontal delivery port.
**GQV:**with free-flow (vortex) impeller
2-pole induction motor, 50 Hz (n ≈ 2900 rpm).
**GQV:**three-phase 400 V +/-10%;
GQVM:single-phase 230 V +/-10%, with thermal protector, with built-in capacitor (without float switch).
Cable length 10 m.
Liquid temperature up to 35° C.

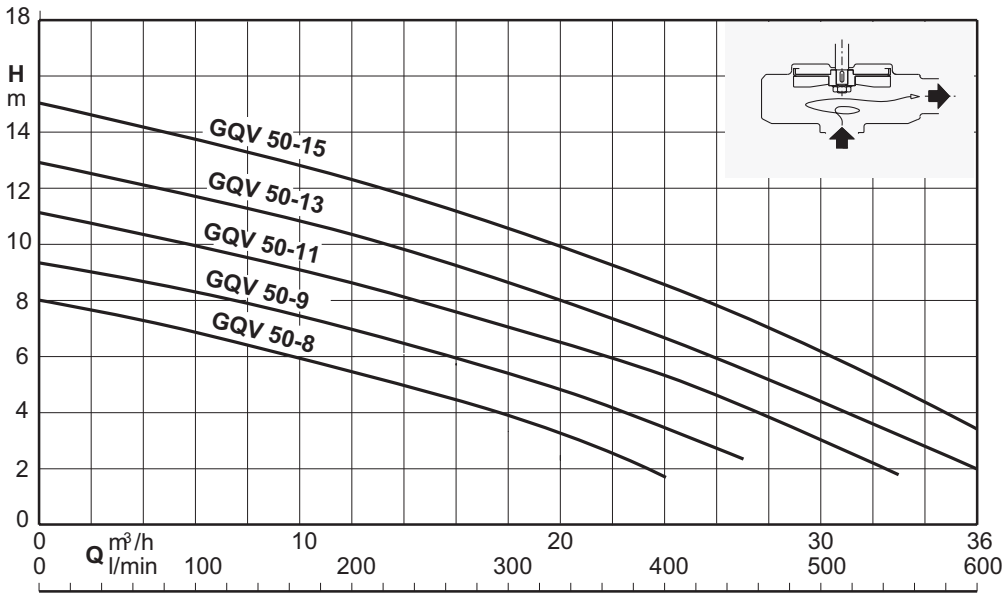

# GEO 500

## Pumps characteristics

GEO 500-GM..

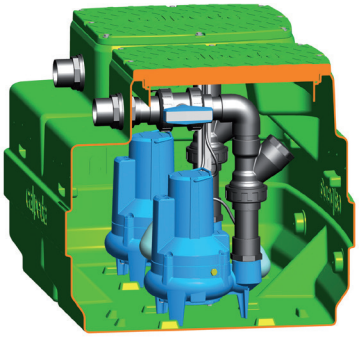

**Characteristics**
Dirty water collection and lifting station with GMV, GMC series pumps.

**It includes:**
1 tank capacity 500 l
2 pump
- single-phase with 10 m cable without float switch
- - three-phase with 10 m cable

1 support kit with 2 float switch
1 control box
2 discharge pipe kit Ø 63 mm in PVC with a ball valve and non-return ball valve

**On request:**
1 safety float switch (with support for single-phase version) and autosupplied control panel for remote alarm with horn and flashing light
- extention 300 mm

| Type single-phase | 1 ~ 230 V | 1 ~ 230 V | Q max | H max |
|---|---|---|---|---|
| | kW | A | m3/h | m |
| GEO 500-2GMCM 50CE | 0,75x2 | 4,5x2 | 36x2 | 9,5 |
| GEO 500-2GMCM 50BE | 1,1x2 | 6,5x2 | 42x2 | 12,5 |
| GEO 500-2GMVM50CE | 0,75x2 | 4,5x2 | 31x2 | 8 |
| GEO 500-2GMVM 50BE | 1,1x2 | 6,5x2 | 35x2 | 9,5 |

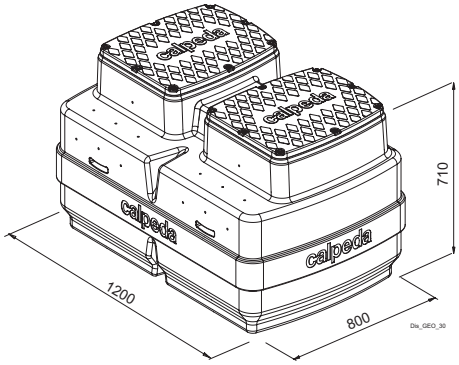


| Type three-phase | 3 ~ 400 V | 3 ~ 400 V | Q max | H max |
|---|---|---|---|---|
| | kW | A | m3/h | m |
| GEO 500-2GMC 50CE | 0,75x2 | 1,9x2 | 36x2 | 9,5 |
| GEO 500-2GMC 50BE | 1,1x2 | 2,7x2 | 42x2 | 12,5 |
| GEO 500-2GMC 50AE | 1,5x2 | 3,8x2 | 48x2 | 14,5 |
| GEO 500-2GMV 50CE | 0,75x2 | 1,9x2 | 31x2 | 8 |
| GEO 500-2GMV 50BE | 1,1x2 | 2,7x2 | 35x2 | 9,5 |
| GEO 500-2GMV 50AE | 1,5x2 | 3,8x2 | 39x2 | 11,5 |

**GMC, GMV**
Submersible sewage and drainage pumps.
**GMC:**with single-channel impeller.
**GMV:**with free-flow (vortex) impeller
2-pole induction motor, 50 Hz (n ≈ 2900 rpm).
**GMC, GMV:**three-phase 400 V +/-10%; with 2 built-in thermal protectors to be connected to the control panel.
**GMCM, GMVM:**single-phase 230V ± 10% with thermal protector in the winding and built-in capacitor (without float).
Cable length 10 m.
Liquid temperature up to 35° C.

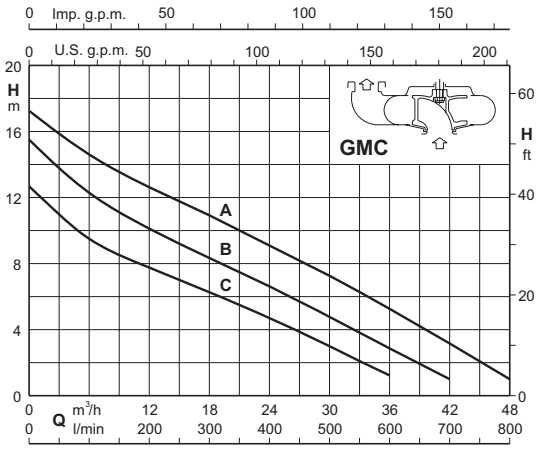


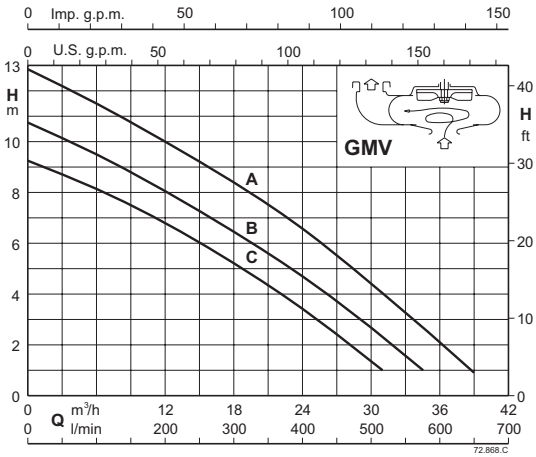

# GEO 500

## Pumps characteristics

GEO 500-GM..

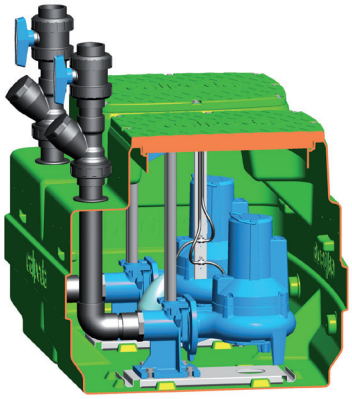

**Characteristics**
Dirty water collection and lifting station with GMV, GMC series pumps.

**It includes:**
1 tank capacity 500 l
2 pump
- single-phase with 10 m cable without float switch
- - three-phase with 10 m cable
1 support kit with 2 float switch
1 control box
2 duck foot coupling kit
2 discharge pipe kit Ø 63 mm in PVC with a ball valve and non-return ball valve

**On request:**
1 safety float switch (with support for single-phase version) and autosupplied control panel for remote alarm with horn and flashing light
- extention 300 mm

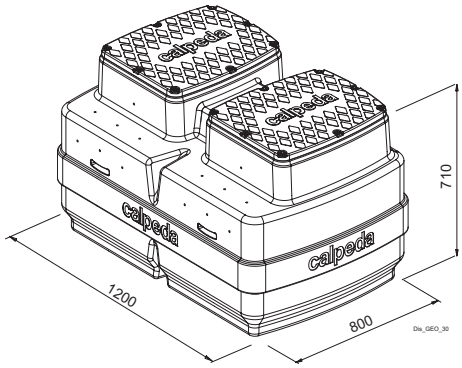


| Type single-phase | 1 ~ 230 V | 1 ~ 230 V | Q max | H max |
|---|---|---|---|---|
| | kW | A | m3/h | m |
| GEO 500-2GMCM 50-65CE | 0,75x2 | 4,5x2 | 36x2 | 9,5 |
| GEO 500-2GMCM 5065BE | 1,1x2 | 6,5x2 | 42x2 | 12,5 |
| GEO 500-2GMVM50-65CE | 0,75x2 | 4,5x2 | 31x2 | 8 |
| GEO 500-2GMVM 50-65BE | 1,1x2 | 6,5x2 | 35 | 9,5 |

| Type three-phase | 3 ~ 400 V | 3 ~ 400 V | Q max | H max |
|---|---|---|---|---|
| | kW | A | m3/h | m |
| GEO 500-2GMC 50-65C | 0,75x2 | 1,9x2 | 36x2 | 9,5 |
| GEO 500-2GMC 50-65B | 1,1x2 | 2,7x2 | 42x2 | 12,5 |
| GEO 500-2GMC 50-65A | 1,5x2 | 3,8x2 | 48x2 | 14,5 |
| GEO 500-2GMV 50-65C | 0,75x2 | 1,9x2 | 31x2 | 8 |
| GEO 500-2GMV 50-65B | 1,1x2 | 2,7x2 | 35x2 | 9,5 |
| GEO 500-2GMV 50-65C | 1,5x2 | 3,8x2 | 39x2 | 11,5 |

**GMC, GMV**
Submersible sewage and drainage pumps.
**GMC:**with single-channel impeller.
**GMV:**with free-flow (vortex) impeller
2-pole induction motor, 50 Hz (n ≈ 2900 rpm).
**GMC, GMV:**three-phase 400 V +/-10%; with 2 built-in thermal protectors to be connected to the control panel.
**GMCM, GMVM:**single-phase 230V ± 10% with thermal protector in the winding and built-in capacitor (without float).
Cable length 10 m.
Liquid temperature up to 35° C.

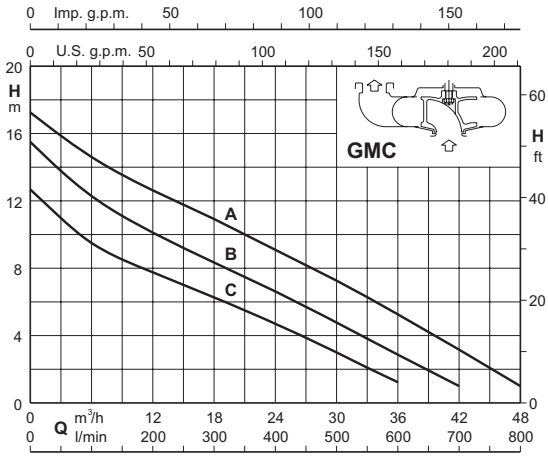


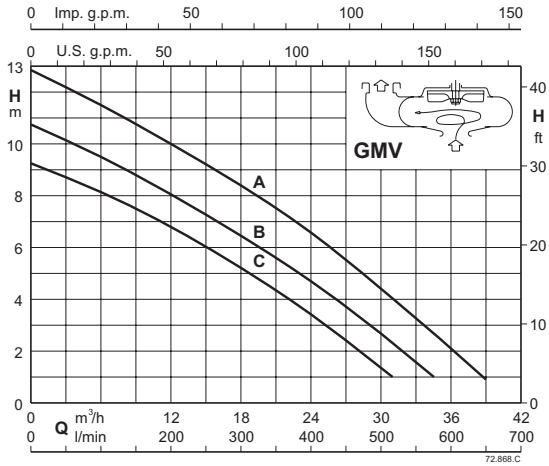

# GEO

## Dimensions and weights

### GEO 40

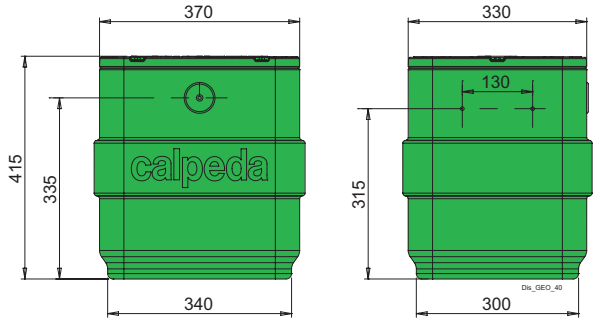


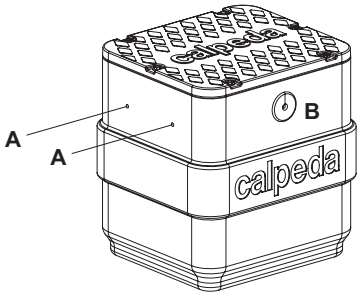


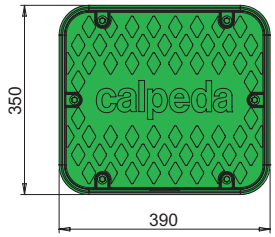


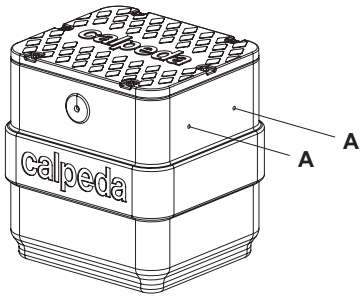


A) Arrangement for :
Ø 40 mm inlet
Ø 40 mm outlet
Ø 25 mm relief
B) Cable passage with Shuko plug

Tank kg.6

### GEO 230

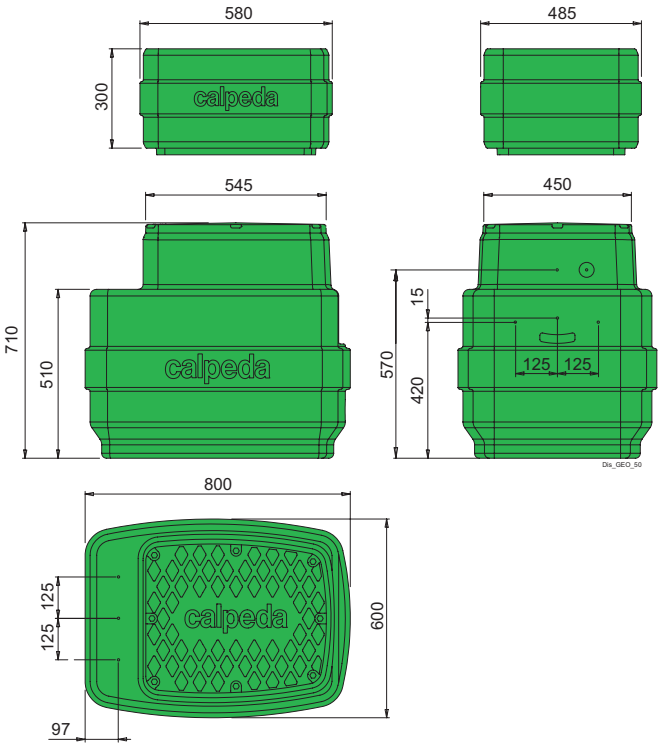


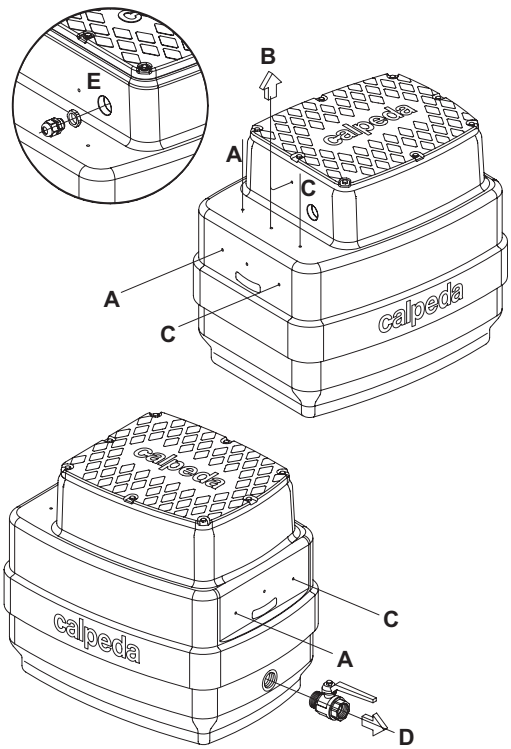


A-C) inlet and relief
B) Inlet for delivery
D) G 1 1/2 draining outlet
E) Cable outlet

Extention kg.4,5
Tank kg.16

# GEO

## Dimensions and weights

**GEO 500**

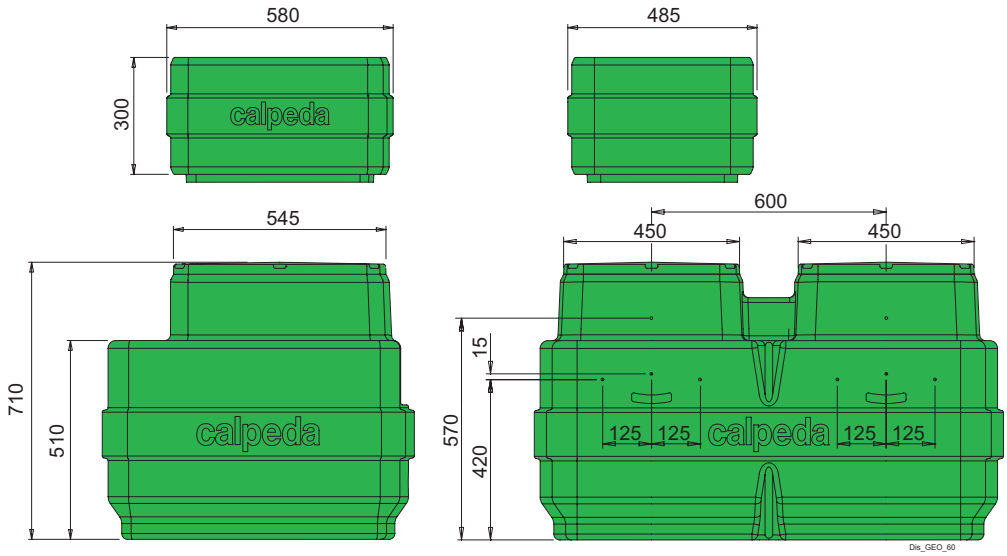


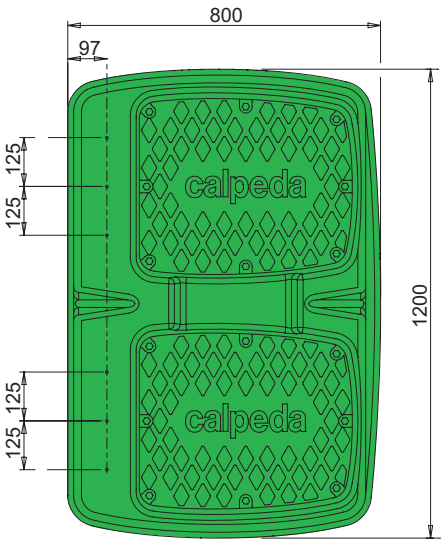


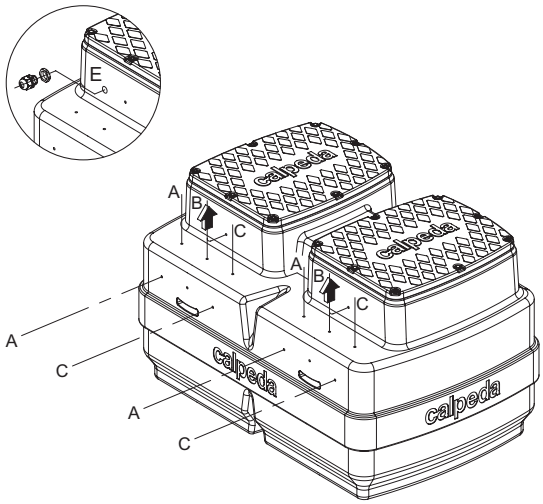


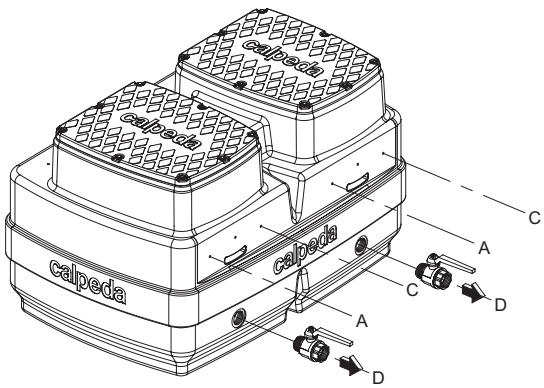


A-C) inlet and relief
B) Inlet for delivery
D) G 1 1/2 draining outlet
E) Cable outlet

Extention kg.4,5
Tank kg.32

## Technical appendix

### LIFTING STATION SIZING

Normally the domestic waste water flows by gravity into the mains sewage collectors.
If there are underground rooms with discharge positions below the sewage main, a lifting station with one or more pumps may be required.

It is necessary to remember that the UNI-EN 12056-4 standard allows rainwater to be pumped to the sewage main only in exceptional cases.

To sizing a lifting station pump it is necessary to calculate the flow Qtot and the Head hmt necessary for the water drainage.

### FLOW CALCULATION

The flow of the lifting pumps can be calculated using Table1, according to the number of people using the building and the location of the building. It is easy to calculate the flow Qr of the sewage water.
The value indicated is already appropriately increased by a coefficient that takes into account peak hours, when water consumption is highest.

The lifting systems of waste water are usually separated from the rainwater system. In case of a mixed system is required to sum the flow Qm of the rainwater of the Table 2 with the flow Qr of the Table 1.

The table indicates the rainwater flow Qm as a function of the exposed surface to rainfall, it varies according to the capacity of the surface to absorb rain water (Table 3).

The total flow of the pump or pumps is:

**Qtot = Qr + Qm**

### HEAD CALCULATION

To calculate the head hmt it is necessary to add the geodetic head existing between the fluid levels with the head losses from internal friction created by the flow of the fluid in the hydraulic pipes and fittings (Figure 1).

After the choice of the discharge pipe diameter, such that the flow speed it is not lower than 0,7 m/s (to avoid deposits) and higher than 2,3 m/s, it is possible to determine the distributed head loss Hd and concentrated head loss Hv Hc, due to

The sum of the head losses DPC is:

**Δpc = Hd+ΣHv+ ΣHc**

The total head hmt is calculated as:

**Hmt = Hg + Δpc**

1) Water arriving from sinks discharge, toilets, showers, washing machines etc.
2) Excluding consumption from industrial processes.
3) The unit flow reference is 1,5 l/min/m2

Table 1 **Maximum flow rate of domestic waste water at peak hour**

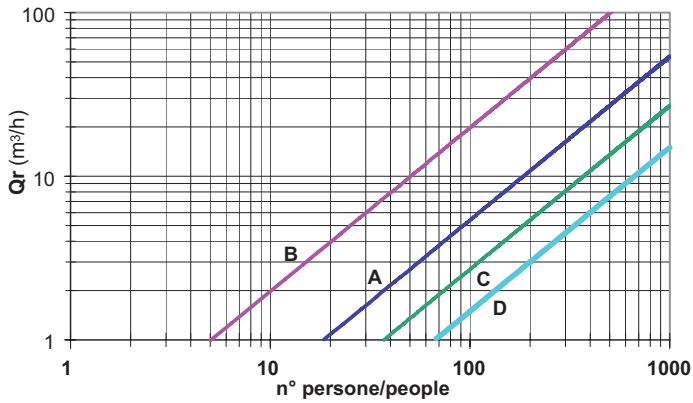


A = residential B = hospitals C = industry D = offices

Table 2 **Rainwater flow rate**

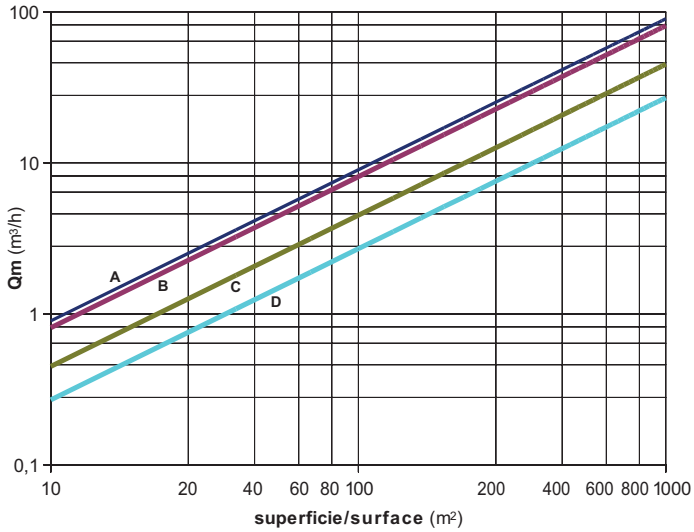


A = yards/roofs B = stone on sand C = pebbles/gravel D = gardens

Figure 1

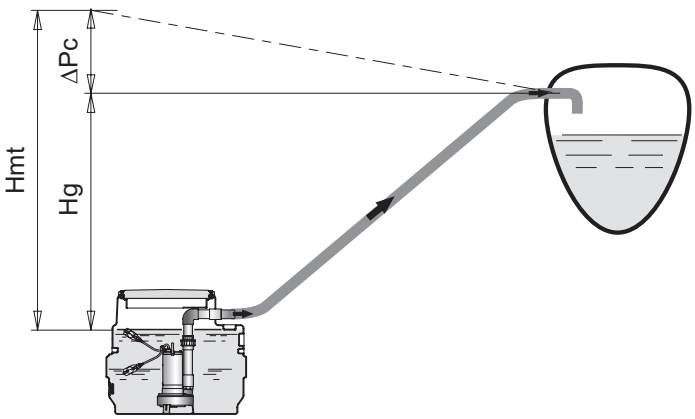

# Technical appendix

calpeda®

## General data

Table 5
Pressure drops in PVC pipes PN6 (m)

| Tubo Pipe Øe mm | Q m³/h | 1,8 | 3,6 | 5,4 | 7,2 | 9 | 18 | 27 | 36 | 50,4 | 64,8 | 90 | 126 | 162 | 180 |
|---|---|---|---|---|---|---|---|---|---|---|---|---|---|---|---|
| | Q l/min | 30 | 60 | 90 | 120 | 150 | 300 | 450 | 600 | 840 | 1080 | 1500 | 2100 | 2700 | 3000 |
| **50** | HL<br>v<br>m/100m<br>m/s | 0,24<br>0,30 | 0,85<br>0,59 | 1,8<br>0,89 | 3,1<br>1,18 | 4,6<br>1,48 | 16,7<br>2,96 | 35,3<br>4,44 | -<br>- | -<br>- | -<br>- | - | -<br>- | -<br>- | -<br>- |
| **63** | | 0,08<br>0,18 | 0,26<br>0,37 | 0,56<br>0,55 | 0,95<br>0,73 | 1,11<br>0,92 | 5,2<br>1,83 | 10,9<br>2,75 | 18,6<br>3,66 | 34,8<br>5,13 | -<br>- | - | -<br>- | -<br>- | -<br>- |
| **75** | | | 0,11<br>0,26 | 0,24<br>0,39 | 0,4<br>0,51 | 0,61<br>0,64 | 2,2<br>1,29 | 4,6<br>1,93 | 7,9<br>2,57 | 14,7<br>3,6 | 23,4<br>4,63 | 43<br>6,43 | -<br>- | -<br>- | -<br>- |
| **90** | | | 0,05<br>0,18 | 0,1<br>0,27 | 0,16<br>0,36 | 0,25<br>0,45 | 0,9<br>0,89 | 1,9<br>1,34 | 3,3<br>1,79 | 6,1<br>2,5 | 9,7<br>3,22 | 17,8<br>4,47 | 33,2<br>6,26 | -<br>- | -<br>- |
| **110** | | | | 0,04<br>0,17 | 0,06<br>0,2 | 0,09<br>0,29 | 0,3<br>0,58 | 0,67<br>0,87 | 1,15<br>1,16 | 2,15<br>1,63 | 3,4<br>2,10 | 6,25<br>2,91 | 11,7<br>4,08 | 18,5<br>5,24 | 22,5<br>5,82 |
| **125** | | | | | 0,03<br>0,18 | 0,05<br>0,23 | 0,17<br>0,45 | 0,36<br>0,68 | 0,6<br>0,90 | 1,15<br>1,26 | 1,84<br>1,63 | 3,37<br>2,26 | 6,3<br>3,16 | 10<br>4,06 | 12,2<br>4,52 |
| **140** | | | | | | 0,03<br>0,18 | 0,1<br>0,36 | 0,2<br>0,54 | 0,35<br>0,72 | 0,65<br>1,01 | 1,05<br>1,30 | 1,95<br>1,80 | 3,6<br>2,52 | 5,77<br>3,24 | 7<br>3,60 |
| **160** | | | | | | | 0,05<br>0,28 | 0,11<br>0,41 | 0,18<br>0,55 | 0,34<br>0,77 | 0,55<br>0,99 | 1,02<br>1,38 | 1,9<br>1,93 | 3<br>2,48 | 3,66<br>2,76 |
| **180** | | | | | | | 0,03<br>0,22 | 0,06<br>0,33 | 0,1<br>0,43 | 0,19<br>0,61 | 0,31<br>0,78 | 0,57<br>1,09 | 1,06<br>1,52 | 1,69<br>1,96 | 2,05<br>2,17 |
| **200** | | | | | | | 0,02<br>0,18 | 0,04<br>0,26 | 0,06<br>0,35 | 0,12<br>0,49 | 0,18<br>0,63 | 0,34<br>0,88 | 0,64<br>1,23 | 1<br>1,59 | 1,23<br>1,76 |
| **225** | | | | | | | | 0,02<br>0,21 | 0,04<br>0,28 | 0,07<br>0,39 | 0,1<br>0,55 | 0,19<br>0,70 | 0,36<br>0,97 | 0,57<br>1,25 | 0,7<br>1,39 |
| **250** | | | | | | | | | 0,02<br>0,23 | 0,04<br>0,32 | 0,06<br>0,41 | 0,12<br>0,56 | 0,22<br>0,79 | 0,34<br>1,02 | 0,42<br>1,13 |
| **280** | | | | | | | | | 0,01<br>0,18 | 0,02<br>0,25 | 0,04<br>0,32 | 0,07<br>0,45 | 0,13<br>0,63 | 0,2<br>0,81 | 0,24<br>0,90 |

Table 6
Pressure drops in bends and gate valves (cm)

| Velocità dell'acqua<br>Water flow velocity<br>m/sec. | Curve ad angolo arrotondato α = 90<br>α = 90 sweep elbow 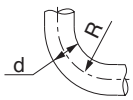 | | | | | Saracinesche<br>Gate valves 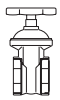 |
|---|---|---|---|---|---|---|
| | $\frac{d}{R}$ = 0,4 | $\frac{d}{R}$ = 0,6 | $\frac{d}{R}$ = 0,8 | $\frac{d}{R}$ = 1 | $\frac{d}{R}$ = 1,5 | |
| 0,4 | 0,11 | 0,13 | 0,16 | 0,23 | 0,43 | 0,23 |
| 0,5 | 0,18 | 0,21 | 0,26 | 0,37 | 0,67 | 0,37 |
| 0,6 | 0,25 | 0,29 | 0,36 | 0,52 | 0,97 | 0,52 |
| 0,7 | 0,34 | 0,40 | 0,48 | 0,70 | 1,35 | 0,70 |
| 0,8 | 0,45 | 0,53 | 0,64 | 0,93 | 1,7 | 0,95 |
| 0,9 | 0,57 | 0,67 | 0,82 | 1,18 | 2,2 | 1,20 |
| 1,0 | 0,7 | 0,82 | 1,0 | 1,45 | 2,7 | 1,45 |
| 1,5 | 1,6 | 1,9 | 2,3 | 3,3 | 6 | 3,3 |
| 2,0 | 2,8 | 3,3 | 4,0 | 5,8 | 11 | 5,8 |
| 2,5 | 4,4 | 5,2 | 6,3 | 9,1 | 17 | 9,1 |
| 3,0 | 6,3 | 7,4 | 9 | 13 | 25 | 13 |
| 3,5 | 8,5 | 10 | 12 | 18 | 33 | 18 |
| 4,0 | 11 | 13 | 16 | 23 | 42 | 23 |
| 4,5 | 14 | 21 | 26 | 37 | 55 | 37 |
| 5,0 | 18 | 29 | 36 | 52 | 67 | 52 |

## Technical appendix

**EXAMPLE OF CALCULATION**

Suppose it is required to size a lifting station, for a residential building where 80 people live. The pumps will have to lift waste water up to an additional tank located 5m higher, the linear distance between the 2 tanks is 70m.
In addition the station will receive rainwater from 400 m2 of tarmac, roof surfaces and 120 m2 from the garden.

Considering:**Q tot = Qr + Qm**

It is possible to calculate the Qr from the Table1 which is 4 m3/h, while Qm is obtained from the Table 2 and is 36 m3/h ( roofs and tarmac) plus 2 m3/h from gardens, with this value Qtot is 42 m3/h. At this flow it will be necessary split the flow between two pumps.We choose a delivery pipe diameter such that the flow rate with two pumps in operation does not exceed 2.3 m / sec and not be lower than 0.7 m / s with a single pump.

From (Table 3) we obtain:
**42 m3/h => 1,4 m/s => Pipe DN 110 (with two pumps in parallel operation)**
**21 m3/h => 0,7 m/s => Pipe DN 110 (with one operating pump)**

The distributed head loss in 70 m pipe with 720 l / min is 1.13 m (Table 3), then from the formula: Hmt = Hg + Δpc

**Hmt = Hg + Δpc**

It is obtained Hmt = 6,13 mca

The suitable pumps are no. 2 GMCM 50-65B and then it result a station type **GEO 500-2GMCM 50-65B.**

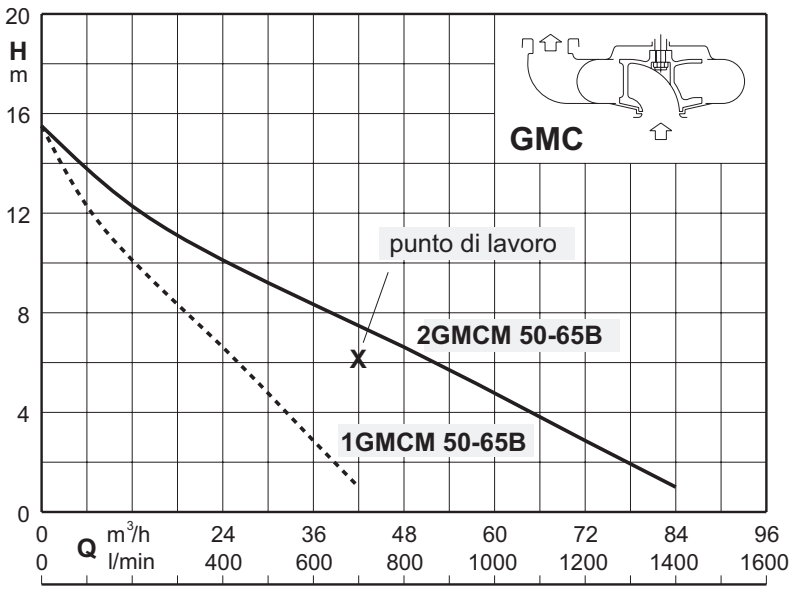


## Examples of installations

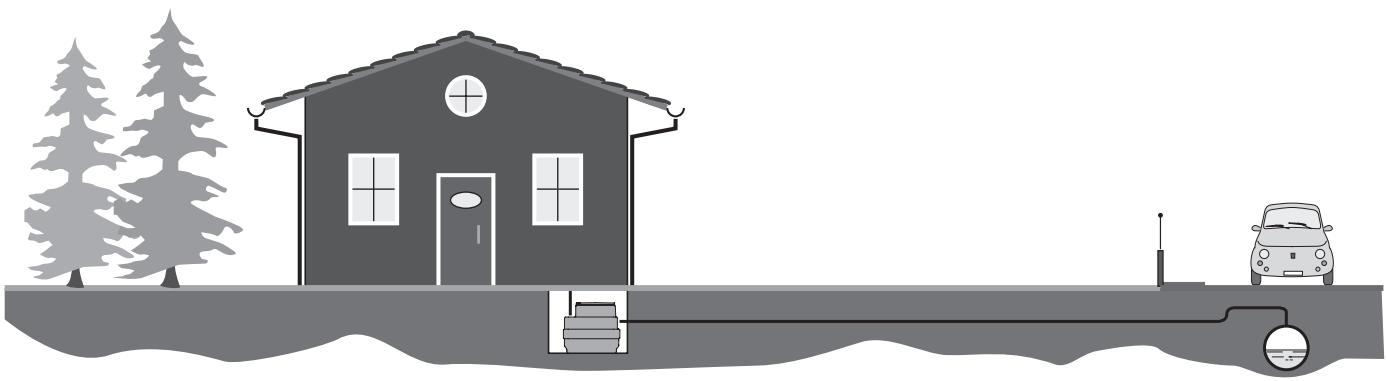

# MP

**Coverage chart n ≈ 2900 rpm**

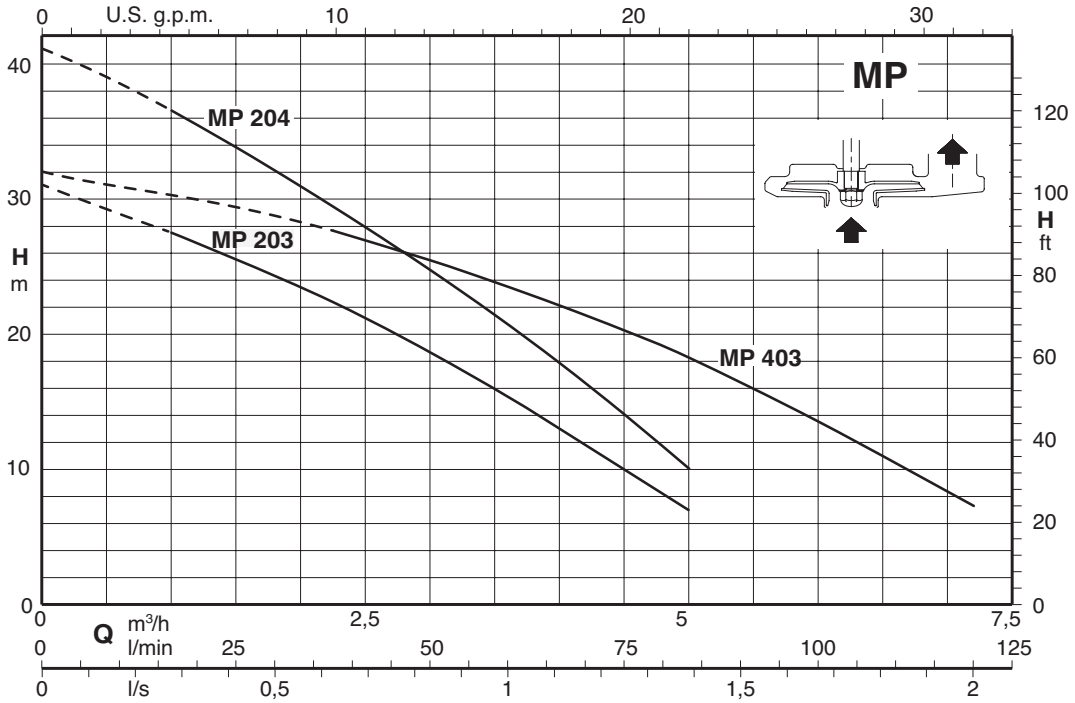


# Multi-stage submersible pumps for clean water

# MP

## Construction

Multi-stage centrifugal submersible pumps with pump jacket in chrome-nickel stainless steel, with vertical delivery port.
Motor cooled by the pumped water passing between the motor jacket and the external jacket.
Double shaft seal with oil chamber.

## Applications

For clean water containing solids up to 2 mm grain size.
Draining flooded rooms or tanks.
Water extraction from ponds, flowing streams, or pits for rainwater collection.
For outdoor use a power supply cable of not less than 10 m should be used in accordance with: EN 60 335-2-41.

## Operating conditions

Liquid temperature up to 35° C.
Maximum immersion depth: 5 m.
Minimum water level with float 100 mm.
Continuous duty.

## Motor

2-pole induction motor, 50 Hz (n ≈ 2900 rpm).
**MP:** three-phase 230 V ± 10%;
400 V ± 10%.
**MPM:** single-phase 230 V ± 10%;
with float switch and thermal protector.
Incorporated capacitor
Insulation class F.
Protection IP X8 (for continuous immersion).
Double impregnation humidity-proof dry winding.
Constructed in accordance with: EN 60034-1; EN 60335-1, EN 60335-2-41.

## Special features on request

Other voltages.
Frequency 60 Hz (as per 60 Hz data sheet).
Other mechanical seal.
Cable length 10 m.
Vertical magnetic float switch.
Motor suitable for operation with frequency converter.

## Designation

Example: MP 203/A
MP = Series
2 = Rated capacity in m3/h
03 = Number of impellers
/A = It refers to a revision

## Materials

| Components | Materials |
|---|---|
| Pump casing | PPO-GF20 (Noryl) |
| Stage casing | PPO-GF20 (Noryl) |
| Impeller | PPO-GF20 (Noryl) |
| motor jacket | Chrome-nickel steel 1.4301 EN 10088 (AISI 304) |
| Pump jacket | Chrome-nickel steel 1.4301 EN 10088 (AISI 304) |
| Filter | Polypropylene |
| Handle | Polypropylene |
| Shaft | Chrome-nickel steel 1.4305 EN 10088 (AISI 303) |
| Mechanical seal | Ceramic / Carbon / NBR |
| Seal lubrication oil | Oil for food/pharmaceutical machinery |

# MP

## Coverage chart n ≈ 2900 rpm

### Three-phase

| | | | | Q = Flow | | | | | | | | | | | | | |
|---|---|---|---|---|---|---|---|---|---|---|---|---|---|---|---|---|---|
| | | | | m³/h | 0 | 1 | 1,5 | 2 | 2,25 | 2,5 | 3 | 3,5 | 4 | 4,5 | 5 | 6 | 7,2 |
| Model | 400V | P2 | | l/min | | 16,66 | 25 | 33,33 | 37,5 | 41,66 | 50 | 58,33 | 66,66 | 75 | 83,33 | 100 | 120 |
| | A | kW | HP | H (m) = Total head | | | | | | | | | | | | | |
| MP 203/A | 1,45 | 0,37 | 0,5 | | 31 | 27,5 | 25,5 | 23,5 | - | 21,2 | 18,6 | 16 | 13 | 10 | 7 | - | - |
| MP 204 | 1,6 | 0,45 | 0,6 | | 41,1 | 36,5 | 33,8 | 30,9 | - | 27,9 | 24,7 | 21,4 | 17,9 | 14,1 | 10,1 | - | - |
| MP 403 | 1,6 | 0,45 | 0,6 | | 32 | - | - | - | 27,6 | - | 25,5 | 23,8 | 22,1 | 20,3 | 18,3 | 13,5 | 7,3 |

### Single-phase

| | | | | | | | Q = Flow | | | | | | | | | | | | | |
|---|---|---|---|---|---|---|---|---|---|---|---|---|---|---|---|---|---|---|---|---|
| | | | | | | | m³/h | 0 | 1 | 1,5 | 2 | 2,25 | 2,5 | 3 | 3,5 | 4 | 4,5 | 5 | 6 | 7,2 |
| Model | 230V | Capacitor | | P2 | | P1 | l/min | | 16,6 | 25 | 33,3 | 37,5 | 41,6 | 50 | 58,3 | 66,6 | 75 | 83,3 | 100 | 120 |
| | A | Vc | uf | kW | HP | kW | H (m) = Total head | | | | | | | | | | | | | |
| MPM 203/A | 3,5 | 450 | 12,5 | 0,37 | 0,5 | 0,63 | | 31 | 27,5 | 25,5 | 23,5 | - | 21,2 | 18,6 | 16 | 13 | 10 | 7 | - | - |
| MPM 204 | 4,5 | 450 | 16 | 0,45 | 0,6 | 0,95 | | 41,1 | 36,5 | 33,8 | 30,9 | - | 27,9 | 24,7 | 21,4 | 17,9 | 14,1 | 10,1 | - | - |
| MPM 403 | 4,5 | 450 | 16 | 0,45 | 0,6 | 0,95 | | 32 | - | - | - | 27,6 | - | 25,5 | 23,8 | 22,1 | 20,3 | 18,3 | 13,5 | 7,3 |

**P1:** Maximum power input.
**P2:** Rated motor power output.
**Head and power values valid for liquids with density ρ = 1,0 kg/dm3 and kinematic viscosity v = max 20 mm2/sec.** Total head in m

# MP

## Dimensions and weights

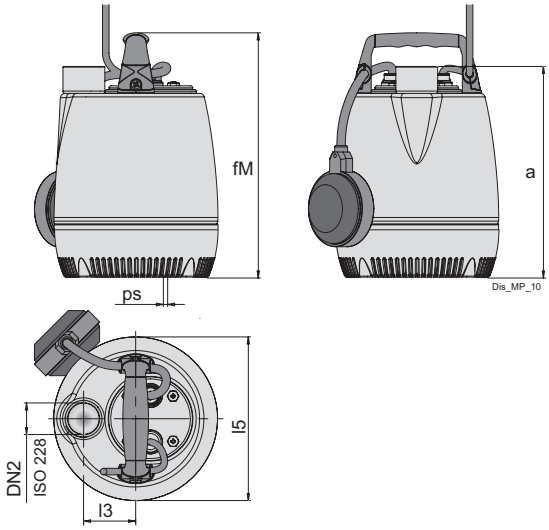


| TYPE | | mm | | | | | kg |
|---|---|---|---|---|---|---|---|
| | DN2 | a | fM | l5 | l5 | ps | Weight |
| **MP 203/A** | G 1 1/4 | 346.5 | 382.5 | 56 | 176 | 2 | 7 |
| **MP 204** | G 1 1/4 | 346.5 | 382.5 | 56 | 176 | 2 | 7.9 |
| **MP 403** | G 1 1/4 | 346.5 | 382.5 | 56 | 176 | 2 | 8 |

| TYPE | | mm | | | | | | | kg |
|---|---|---|---|---|---|---|---|---|---|
| | DN2 | a | fM | l5 | l5 | Lmax | Lmin | ps | Weight |
| **MPM 203/A** | G 1 1/4 | 346.5 | 382.5 | 56 | 176 | 428 | 218 | 2 | 7.5 |
| **MPM 204** | G 1 1/4 | 346.5 | 382.5 | 56 | 176 | 428 | 218 | 2 | 8 |
| **MPM 403** | G 1 1/4 | 346.5 | 382.5 | 56 | 176 | 428 | 218 | 2 | 8 |

## Examples of installations

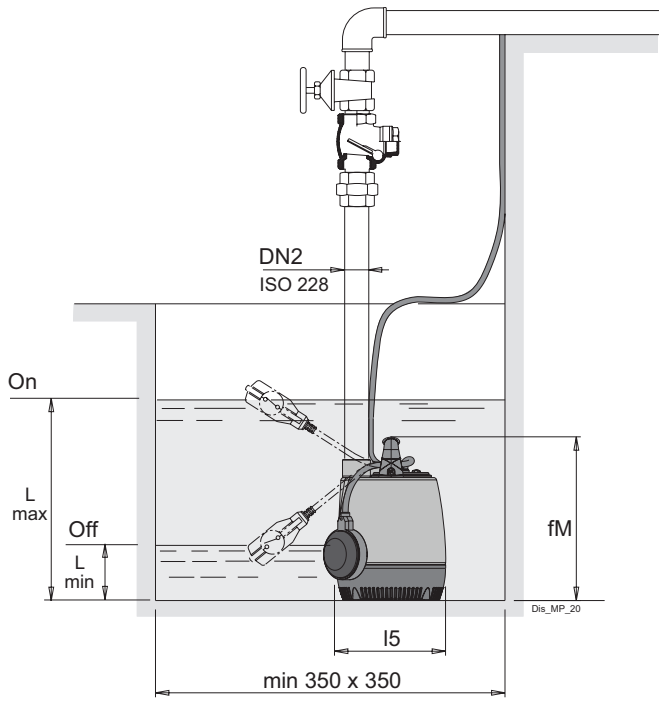


## Installation examples with vertical magnetic float switch

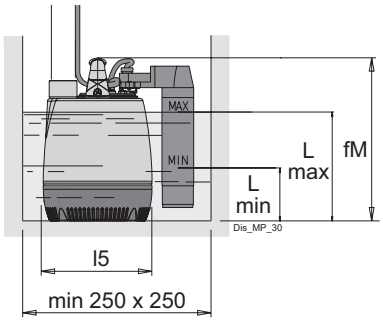


| TYPE | mm | | Kg |
|---|---|---|---|
| | Lmax | Lmin | Weight |
| **MPM 203/A GF** | 308 | 210 | 7 |
| **MPM 204 GF** | 308 | 210 | 7.9 |
| **MPM 403 GF** | 308 | 210 | 8.2 |

ed. 03/2025

# E-MPS

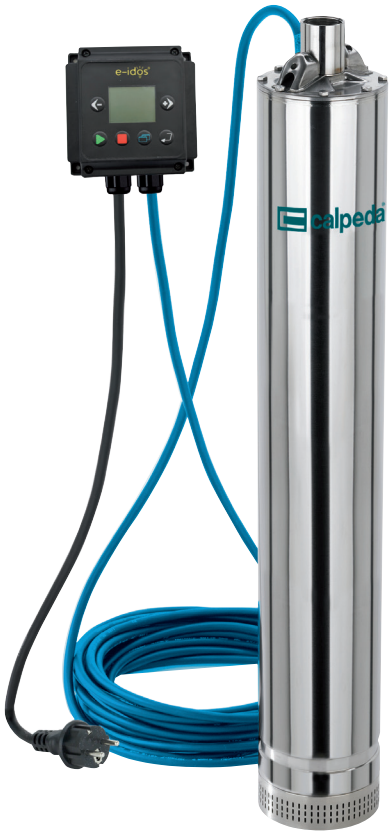


EASY TO INSTALL
Plug And play solution

ECONOMIC SAVING
High efficiency asynchronous motor 24% less energy consumption compared to a standard pump

EASY TO USE
Equipped with a programmable software and, thanks to the analogic pressure sensor, the product allows to set the restart pressure. An ideal solution which allows to reduce or remove the need of a expansion tank

# Multi-stage submersible pumps for clean water with built-in electronic pressure sensor

# E-MPS

## Construction

5” Close coupled multi-stage submersible pumps. Easy to install, compact and plug and play with integrated pressure transducer for automatic control of starting/stopping of the pump when utilization points are opened/closed with E-MPSM with built-in capacitor, accessible through the delivery casing.
Hydraulics located below the motor with the motor cooled by the pumped fluid.
Safe operation is possible with the motor only partially submerged.
Double shaft seal with oil chamber.
The suction strainer prevents the entrance of solids with diameter bigger than 2 mm.

## Applications

For water supply from wells, tanks or reservoirs.
For domestic, civil and industrial applications, for garden use, irrigation rain water harvesting systems.

## Features

high efficiency asynchronous motor
- capacitor less stressed in voltage
- uniform and lower motor temperature
- motor power control
- programmable re-start pressure
- programmable stop pressure
- no hydraulic losses due to the measuring devices
- voltage and current control
- monitoring of maximum starting current

## Protections

- dry-run protection
- overload control and overheating motor control
- pump blockage
- power supply control
- starts per hour control

## Operating conditions

Liquid temperature: 0 °C to +35 °C.
Minimum internal diameter of well: 140 mm.
Minimum immersion depth: 100 mm.
Maximum immersion depth: 20 m (with suitable cable length).
Continuous duty.

## Motor

2-pole induction motor, 50 Hz (n ≈ 2900 rpm).
Single-phase 230 V ± 10%, with thermal protector.
Incorporated capacitor
Cable: - Pump 07BB-F, 3G1+4x0,34 mm2 , length 23 m.
Cable - Power supply cable H07RN8-F, 3G1,5 length 1,5 m with plug CEI-UNEL 47166.
Insulation class F.
Protection IP X8 (for continuous immersion).
Triple impregnation humidity-proof dry winding.
Constructed in accordance with EN 60335-2-41.(CEI 61-69)

## Designation

Example: E-MPSM 304
E = Electronic
MPS = Series
M = Single-phase (without three-phase indication)
3 = Rated capacity in m3/h
04 = Number of impellers

## Materials

| Components | Material |
|---|---|
| delivery casing | Chrome-nickel steel 1.4301 EN 10088 (AISI 304) |
| External jacket | Chrome-nickel steel 1.4301 EN 10088 (AISI 304) |
| Suction strainer | Chrome-nickel steel 1.4301 EN 10088 (AISI 304) |
| motor jacket | Chrome-nickel steel 1.4301 EN 10088 (AISI 304) |
| Non-return valve | POM - POLYACETAL |
| Stage casing | PPO-GF20 (Noryl) |
| Impeller | PPO-GF20 (Noryl) |
| Shaft | Chrome-nickel steel 1.4301 EN 10088 (AISI 304) |
| Capacitor cover | PPS Polymer (Grivory) |
| Oil chamber cover | PPS Polymer (Grivory) |
| Support ring preload | PPS Polymer (Grivory) |
| Preload ring stages | PPS Polymer (Grivory) |
| Upper mechanical seal | Steatite, carbon, NBR |
| Lower mechanical seal | Carbone, carburo di silicio, NBR |
| Seal lubrication oil | Oil for food machinery and pharmaceutic use |

# E-MPS

## Coverage chart n ≈ 2900 rpm

### Single-phase

| | | | | | | | | Q = Flow | | | | | | | | | | | | |
|---|---|---|---|---|---|---|---|---|---|---|---|---|---|---|---|---|---|---|---|---|
| | | | | | | | m³/h | 0 | 1 | 1,5 | 2 | 2,5 | 3 | 3,5 | 4 | 4,5 | 5 | 6 | 7 | 8 |
| Model | 230V | Capacitor | | P2 | | P1 | l/min | | 16,6 | 25 | 33,3 | 41,6 | 50 | 58,3 | 66,6 | 75 | 83,3 | 100 | 117 | 133 |
| | A | V | uf | kW | HP | kW | | H (m) = Total head | | | | | | | | | | | | |
| E-MPSM 304 | 4,1 | 450 | 25 | 0,55 | 0,75 | 0,8 | | 44 | 40 | 37,5 | 35 | 31,5 | 28,5 | 24,5 | 21 | 16 | - | - | - | - |
| E-MPSM 305 | 5 | 450 | 30 | 0,75 | 1 | 1 | | 56 | 50 | 47 | 44 | 40 | 36 | 32 | 26,5 | 21,5 | - | - | - | - |
| E-MPSM 306 | 6 | 450 | 35 | 0,9 | 1,2 | 1,2 | | 66,5 | 60,5 | 57 | 53 | 48,5 | 43,5 | 38 | 32 | 26 | - | - | - | - |
| E-MPSM 504 | 6 | 450 | 35 | 0,9 | 1,2 | 1,2 | | 45 | - | - | - | 39,5 | 37,8 | 35,8 | 33,5 | 31 | 28 | 22 | 15,5 | 8 |
| E-MPSM 505 | 7 | 450 | 35 | 1,1 | 1,5 | 1,3 | | 53 | - | - | - | 47,5 | 45,5 | 43 | 40 | 37 | 33 | 26 | 18 | 10 |

**P1:** Maximum power input.
**P2:** Rated motor power output.
**H:** Total head in m

**Test results with clean cold water, without gas content.**
Tolerances according to UNI EN ISO 9906:2012

## Characteristic curves n ≈ 2800 1/min

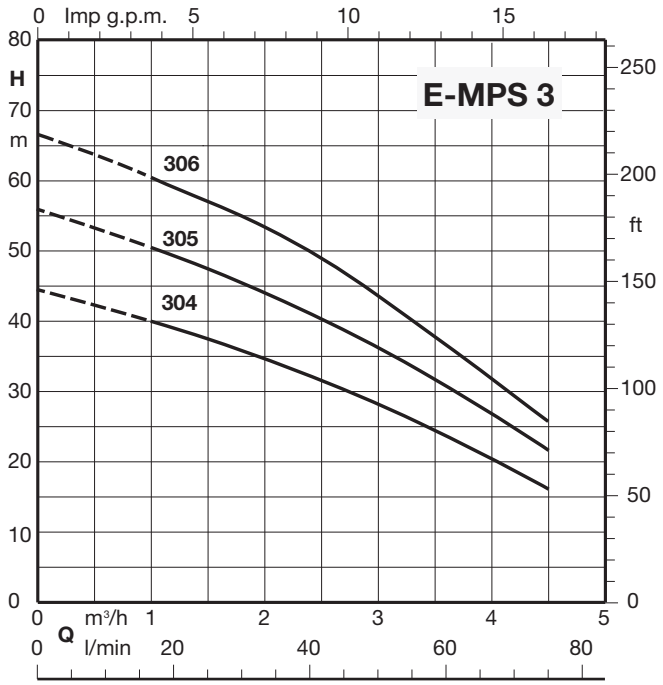


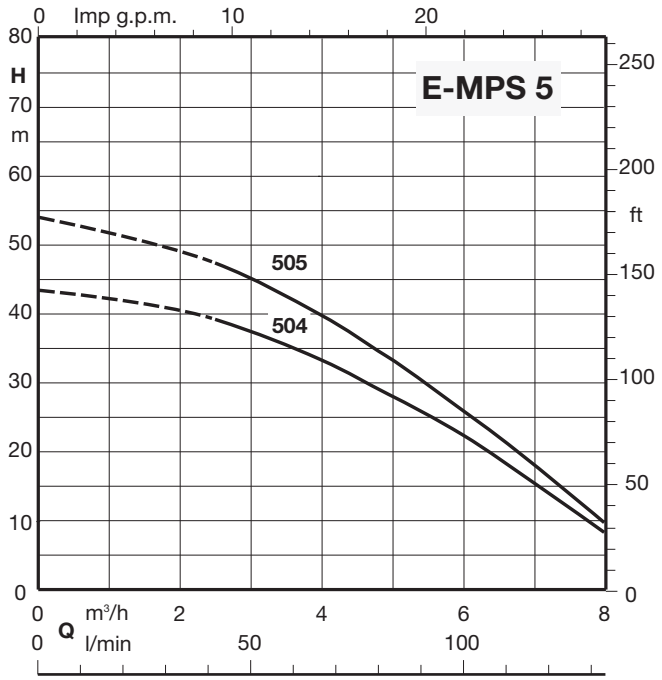

# E-MPS

## Dimensions and weights

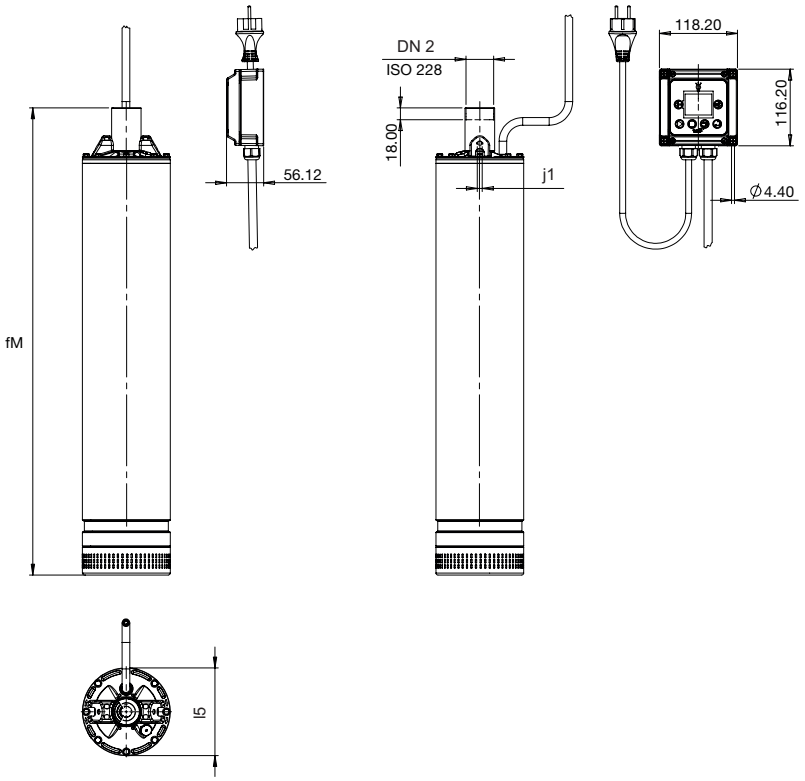


| TYPE | ISO 228 | mm | | | kg |
|---|---|---|---|---|---|
| | DN2 | fM | j1 | l5 | Weight |
| **E-MPSM 304** | G 1 1/4 | 659.2 | 7 | 133 | 15.5 |
| **E-MPSM 305** | G 1 1/4 | 708.2 | 7 | 133 | 16.9 |
| **E-MPSM 306** | G 1 1/4 | 732.2 | 7 | 133 | 17.8 |
| **E-MPSM 504** | G 1 1/4 | 684.2 | 7 | 133 | 17.1 |
| **E-MPSM 505** | G 1 1/4 | 708.2 | 7 | 133 | 17.4 |

With cable length: 23 m

## Installation

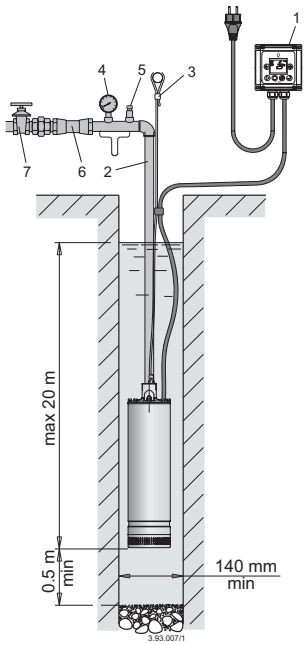


Pump in suspended position

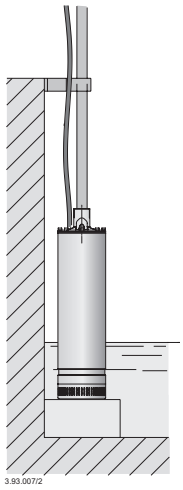


Pump in the standing position

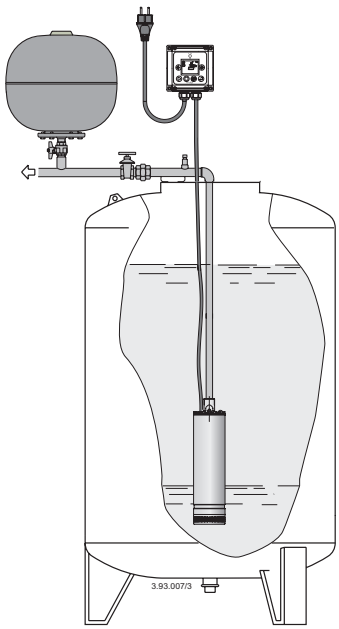


Examples of installations

1. Control box
2. Delivery pipe
3. Safety rope
4. Pressure gauge
5. Air vent valve
6. Gate valve
7. Pressure tank

# MPS

**Coverage chart n ≈ 2900 rpm**

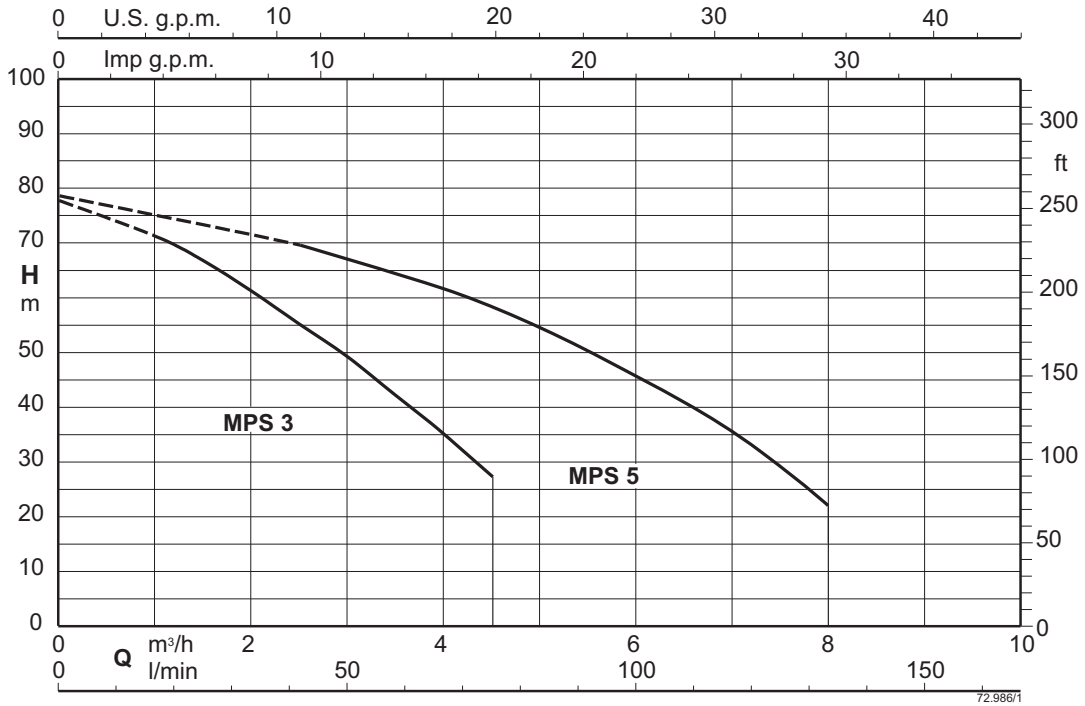


# Multi-stage submersible pumps for clean water

# MPS

## Construction

5” Close coupled multi-stage submersible pumps.
External jacket made of steel 1.4301 EN 10088 (AISI 304) and Noryl stages.
MPSM with built-in capacitor, accessible through the delivery casing.
Hydraulics located below the motor with the motor cooled by the pumped fluid.
Safe operation is possible with the motor only partially submerged.
Double shaft seal with oil chamber.
The suction strainer prevents the entrance of solids with diameter bigger than 2 mm.

## Applications

For water supply from wells, tanks or reservoirs.
For domestic, civil and industrial applications, for garden use, irrigation rain water harvesting systems.

## Operating conditions

Liquid temperature up to 35° C.
Minimum internal diameter of well: 140 mm.
Minimum immersion depth: 100 mm.
Maximum immersion depth: 20 m (with suitable cable length).
Continuous duty.

## Motor

2-pole induction motor, 50 Hz (n ≈ 2900 rpm).
**MPS:** three-phase 230 V ± 10%;
400 V ± 10%.
Cable: H07RN8-F, length 15 m, without plug.
**MPSM:** single-phase 230 V ± 10%, with thermal protector.
Incorporated capacitor
Float switch MPSM.. CG (on demand)
Cable: H07RN8-F, length 15 m, with plug CEI-UNEL 47166.
Insulation class F.
Protection IP X8 (for continuous immersion).
Triple impregnation humidity-proof dry winding
Constructed in accordance with EN 60335-2-41.

## Special features on request

Other voltages.
Frequency 60 Hz (as per 60 Hz data sheet).
Other mechanical seal.
Cable length 20 m.
Motor suitable for operation with frequency converter.

## Designation

Example: MPSM 304
MPS = Series
M = Single-phase (without three-phase indication)
3 = Rated capacity in m3/h
04 = Number of impellers

## Materials

| Components | Materials |
|---|---|
| delivery casing | Chrome-nickel steel 1.4301 EN 10088 (AISI 304) |
| External jacket | Chrome-nickel steel 1.4301 EN 10088 (AISI 304) |
| Suction strainer | Chrome-nickel steel 1.4301 EN 10088 (AISI 304) |
| motor jacket | Chrome-nickel steel 1.4301 EN 10088 (AISI 304) |
| Stage casing | PPO-GF20 (Noryl) |
| Impeller | PPO-GF20 (Noryl) |
| Shaft | Chrome-nickel steel 1.4301 EN 10088 (AISI 304) |
| Capacitor cover | PPS Polymer (Grivory) |
| Oil chamber cover | PPS Polymer (Grivory) |
| Support ring preload | PPS Polymer (Grivory) |
| Preload ring stages | PPS Polymer (Grivory) |
| Upper mechanical seal | Steatite, carbon, NBR |
| Lower mechanical seal | Carbone, carburo di silicio, NBR |
| Seal lubrication oil | Oil for food machinery and pharmaceutic use |

# MPS

## Coverage chart n ≈ 2900 rpm

### Three-phase

| | | | | Q = Flow | | | | | | | | | | | | | |
|---|---|---|---|---|---|---|---|---|---|---|---|---|---|---|---|---|---|
| | | | | m³/h | 0 | 1 | 1,5 | 2 | 2,5 | 3 | 3,5 | 4 | 4,5 | 5 | 6 | 7 | 8 |
| Model | 400V | P2 | | l/min | | 16,66 | 25 | 33,33 | 41,66 | 50 | 58,33 | 66,66 | 75 | 83,33 | 100 | 116 | 133 |
| | A | kW | HP | H (m) = Total head | | | | | | | | | | | | | |
| MPS 303/A | 1,4 | 0,45 | 0,6 | | 32,5 | 29,5 | 27,5 | 25,5 | 23 | 19,5 | 17 | 13 | 10 | - | - | - | - |
| MPS 304/A | 1,6 | 0,55 | 0,75 | | 44 | 41,5 | 39,5 | 36,5 | 33,5 | 29,5 | 25,5 | 21 | 16 | - | - | - | - |
| MPS 305/A | 1,9 | 0,75 | 1 | | 54 | 49,5 | 47 | 44 | 40 | 35 | 30 | 25 | 19 | - | - | - | - |
| MPS 306/A | 2,2 | 0,9 | 1,2 | | 66,5 | 61 | 58 | 54 | 49 | 43 | 37 | 30,5 | 23 | - | - | - | - |
| MPS 307/A | 2,6 | 0,9 | 1,2 | | 75 | 71 | 66,5 | 61 | 55 | 49 | 42 | 35 | 27 | - | - | - | - |
| MPS 503/A | 1,6 | 0,55 | 0,75 | | 32,2 | - | - | - | 28,5 | 27,5 | 26 | 24,5 | 22,5 | 21,5 | 18 | 13,5 | 8 |
| MPS 504/A | 2,2 | 0,9 | 1,2 | | 45 | - | - | - | 39,5 | 37,8 | 35,8 | 33,5 | 31 | 28,5 | 23 | 16,5 | 9,5 |
| MPS 505/A | 2,6 | 1,1 | 1,5 | | 53 | - | - | - | 47,5 | 45,5 | 43,5 | 41 | 38,5 | 35,5 | 29,5 | 22 | 13,5 |
| MPS 506/A | 2,8 | 1,1 | 1,5 | | 66,5 | - | - | - | 58 | 55,6 | 53 | 50 | 46,3 | 42,5 | 34 | 24,5 | 14 |
| MPS 507/A | 4 | 1,5 | 2 | | 78,5 | - | - | - | 69,5 | 66,5 | 64 | 61,5 | 58 | 54,5 | 45,5 | 36 | 22 |

### Single-phase

| | | | | | | | Q = Flow | | | | | | | | | | | | | |
|---|---|---|---|---|---|---|---|---|---|---|---|---|---|---|---|---|---|---|---|---|
| | | | | | | | m³/h | 0 | 1 | 1,5 | 2 | 2,5 | 3 | 3,5 | 4 | 4,5 | 5 | 6 | 7 | 8 |
| Model | 230V | Capacitor | | P2 | | P1 | l/min | | 16,6 | 25 | 33,3 | 41,6 | 50 | 58,3 | 66,6 | 75 | 83,3 | 100 | 117 | 133 |
| | A | Vc | uf | kW | HP | kW | H (m) = Total head | | | | | | | | | | | | | |
| MPSM 303/A | 3,5 | 450 | 14 | 0,45 | 0,6 | 0,8 | | 32,5 | 29,5 | 27,5 | 25,5 | 23 | 19,5 | 17 | 13 | 10 | - | - | - | - |
| MPSM 304/A | 4,1 | 450 | 20 | 0,55 | 0,75 | 0,9 | | 44 | 41,5 | 39,5 | 36,5 | 33,5 | 29,5 | 25,5 | 21 | 16 | - | - | - | - |
| MPSM 305/A | 5 | 450 | 20 | 0,75 | 1 | 1,1 | | 54 | 49,5 | 47 | 44 | 40 | 35 | 30 | 25 | 19 | - | - | - | - |
| MPSM 306/A | 6 | 450 | 25 | 0,9 | 1,2 | 1,3 | | 66,5 | 61 | 58 | 54 | 49 | 43 | 37 | 30,5 | 23 | - | - | - | - |
| MPSM 307/A | 6,6 | 450 | 25 | 0,9 | 1,2 | 1,5 | | 75 | 71 | 66,5 | 61 | 55 | 49 | 42 | 35 | 27 | - | - | - | - |
| MPSM 503/A | 4,1 | 450 | 20 | 0,55 | 0,75 | 0,9 | | 32,2 | - | - | - | 28,5 | 27,5 | 26 | 24,5 | 22,5 | 21,5 | 18 | 13,5 | 8 |
| MPSM 504/A | 6 | 450 | 25 | 0,9 | 1,2 | 1,2 | | 45 | - | - | - | 39,5 | 37,8 | 35,8 | 33,5 | 31 | 28,5 | 23 | 16,5 | 9,5 |
| MPSM 505/A | 7 | 450 | 25 | 1,1 | 1,5 | 1,5 | | 53 | - | - | - | 47,5 | 45,5 | 43,5 | 41 | 38,5 | 35,5 | 29,5 | 22 | 13,5 |
| MPSM 506/A | 8,3 | 450 | 30 | 1,1 | 1,5 | 1,7 | | 66,5 | - | - | - | 58 | 55,6 | 53 | 50 | 46,3 | 42,5 | 34 | 24,5 | 14 |
| MPSM 507/A | 12 | 450 | 35 | 1,5 | 2 | 2,2 | | 78,5 | - | - | - | 69,5 | 66,5 | 64 | 61,5 | 58 | 54,5 | 45,5 | 36 | 22 |

**P1:** Maximum power input.
**P2:** Rated motor power output.
**Head and power values valid for liquids with density ρ = 1,0 kg/dm3 and kinematic viscosity v = max 20 mm2/sec.** Total head in m

# MPS

## Dimensions and weights

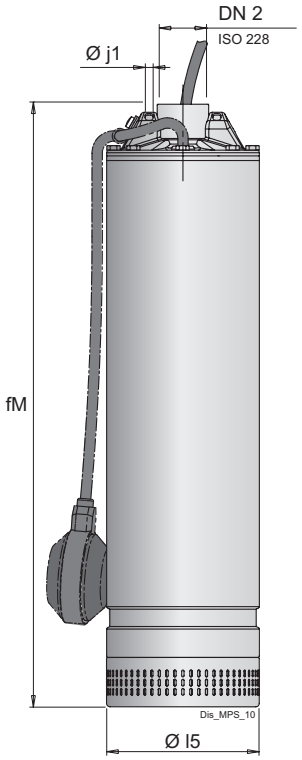


| TYPE | | mm | | | kg |
|---|---|---|---|---|---|
| | DN2 | fM | j1 | l5 | Weight |
| MPS 303/A | G 1 1/4 | 465 | 7 | 133 | - |
| MPS 304/A | G 1 1/4 | 504 | 7 | 133 | - |
| MPS 305/A | G 1 1/4 | 553 | 7 | 133 | - |
| MPS 306/A | G 1 1/4 | 601 | 7 | 133 | 13.4 |
| MPS 307/A | G 1 1/4 | 601 | 7 | 133 | - |
| MPS 503/A | G 1 1/4 | 504 | 7 | 133 | - |
| MPS 504/A | G 1 1/4 | 553 | 7 | 133 | 13 |
| MPS 505/A | G 1 1/4 | 553 | 7 | 133 | - |
| MPS 506/A | G 1 1/4 | 622 | 7 | 133 | - |
| MPS 507/A | G 1 1/4 | 671 | 7 | 133 | - |

| TYPE | | mm | | | kg |
|---|---|---|---|---|---|
| | DN2 | fM | j1 | l5 | Weight |
| MPSM 303/A | G 1 1/4 | 465 | 7 | 133 | - |
| MPSM 304/A | G 1 1/4 | 504 | 7 | 133 | - |
| MPSM 305/A | G 1 1/4 | 553 | 7 | 133 | - |
| MPSM 306/A | G 1 1/4 | 601 | 7 | 133 | 15 |
| MPSM 307/A | G 1 1/4 | 601 | 7 | 133 | - |
| MPSM 503/A | G 1 1/4 | 504 | 7 | 133 | - |
| MPSM 504/A | G 1 1/4 | 553 | 7 | 133 | - |
| MPSM 505/A | G 1 1/4 | 553 | 7 | 133 | - |
| MPSM 506/A | G 1 1/4 | 622 | 7 | 133 | - |
| MPSM 507/A | G 1 1/4 | 671 | 7 | 133 | - |

With cable length: 15m

**MPSM ... CG**
With float switch pump (on demand)

## Installation

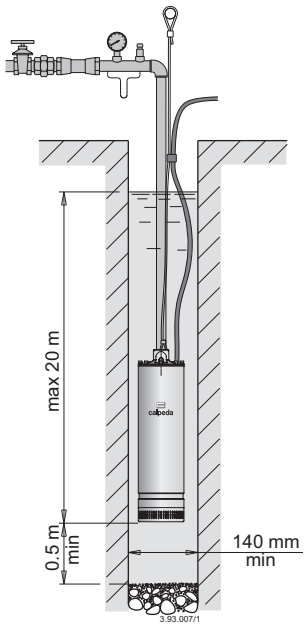


Pump in suspended position

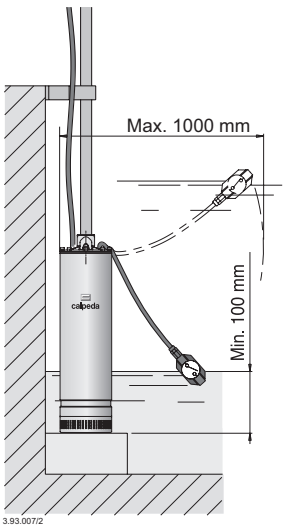


Pump in the standing position

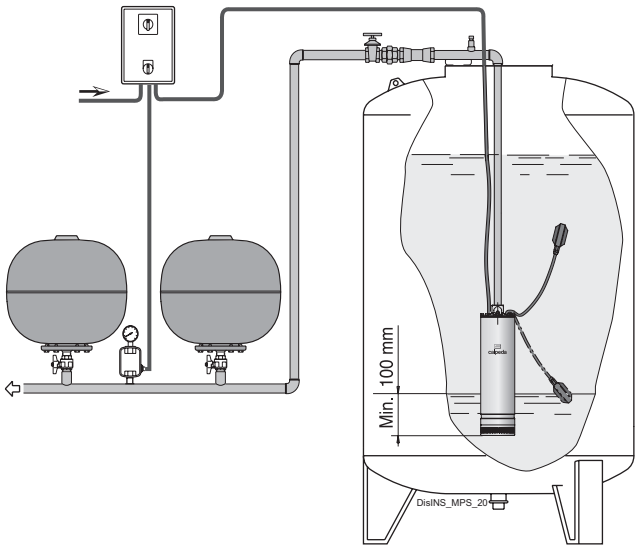


Examples of installations

# MPS

## Characteristic curves n ≈ 2900 rpm

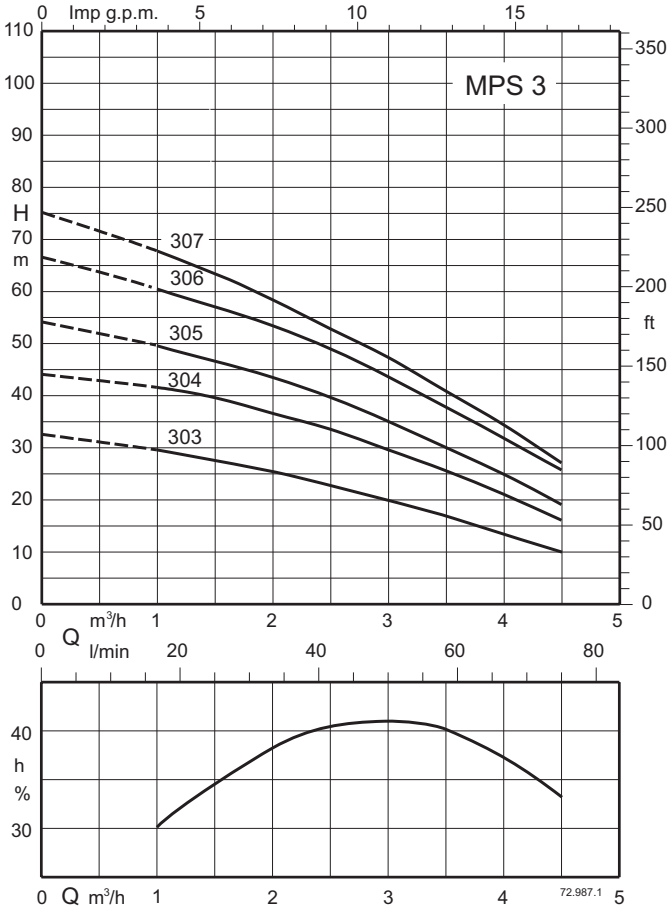


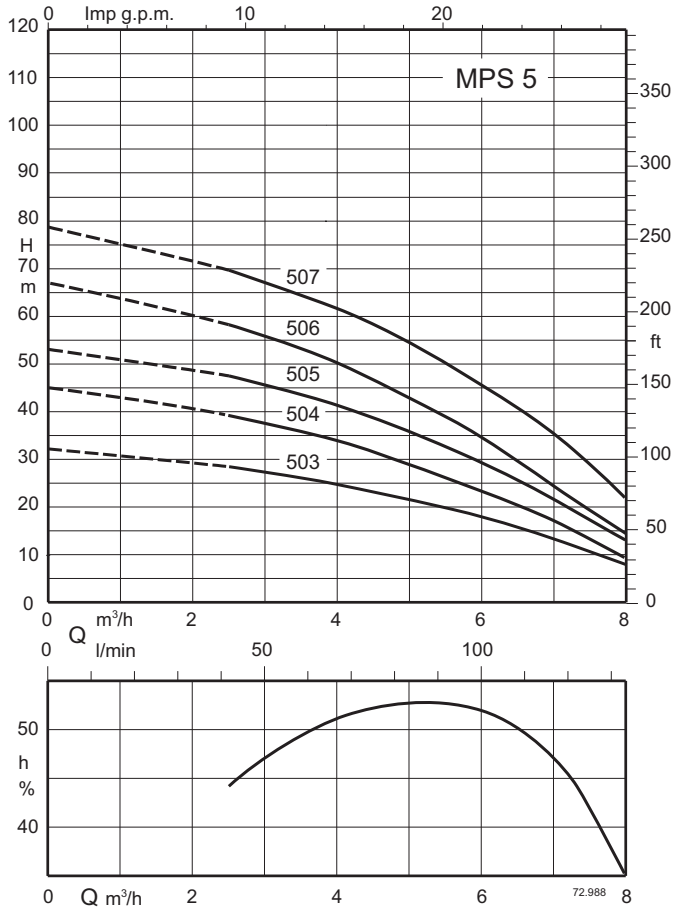

# MXS

**Coverage chart n ≈ 2900 rpm**

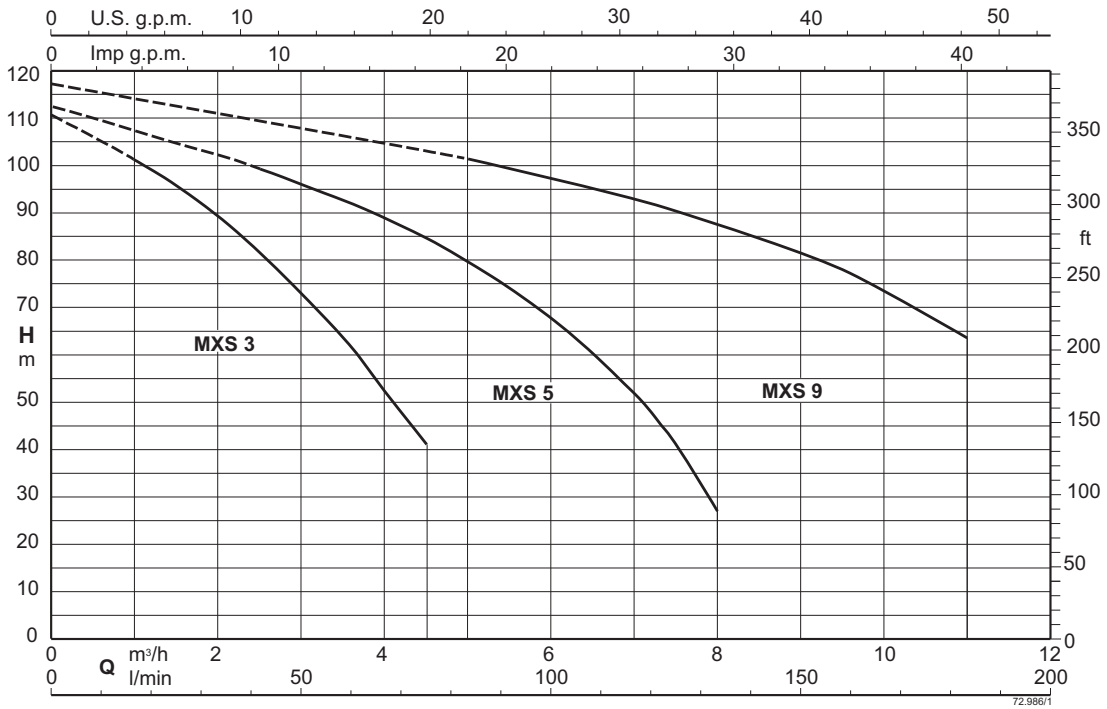


# Multi-stage stainless steel submersible clean water pumps

# MXS

## Construction

5” Close coupled multi-stage submersible pumps.
All parts in contact with the fluid both internal and external are in chrome-nickle stainless steel.
MXSM with built-in capacitor, accessible through the delivery casing.
Hydraulics located below the motor with the motor cooled by the pumped fluid.
Safe operation is possible with the motor only partially submerged.
Double shaft seal with oil chamber.
The suction strainer prevents the entrance of solids with diameter bigger than 2 mm.

## Applications

For water supply from wells, tanks or reservoirs.
For domestic, civil and industrial applications, for garden use, irrigation rain water harvesting systems.

## Operating conditions

Liquid temperature up to 35° C.
Minimum internal diameter of well: 140 mm.
Minimum immersion depth: 100 mm.
Maximum immersion depth: 20 m (with suitable cable length).
Continuous duty.

## Motor

2-pole induction motor, 50 Hz (n ≈ 2900 rpm).
**MXS:** three-phase 230 V ± 10%;
400 V ± 10%.
Cable: H07RN8-F, length 15 m, without plug.
**MXSM:** single-phase 230 V ± 10%, with thermal protector.
Incorporated capacitor
Float switch MXSM.. CG up to 10A (on demand)
Cable: H07RN8-F, length 15 m, with plug CEI-UNEL 47166.
Insulation class F.
Protection IP X8 (for continuous immersion).
Triple impregnation humidity-proof dry winding
Constructed in accordance with EN 60335-2-41.

## Special features on request

Other voltages.
Frequency 60 Hz (as per 60 Hz data sheet).
Cable length 20 m.
Motor suitable for operation with frequency converter.

## Designation

Example: MXSM 304
MXS = Series
M = Single-phase (without three-phase indication)
3 = Rated capacity in m3/h
04 = Number of impellers

## Materials

| Components | Materials |
|---|---|
| delivery casing | Chrome-nickel steel 1.4301 EN 10088 (AISI 304) |
| External jacket | Chrome-nickel steel 1.4301 EN 10088 (AISI 304) |
| Suction strainer | Chrome-nickel steel 1.4301 EN 10088 (AISI 304) |
| Stage casing | Chrome-nickel steel 1.4301 EN 10088 (AISI 304) |
| Spacer sleeve | Chrome-nickel steel 1.4301 EN 10088 (AISI 304) |
| Impeller | Chrome-nickel steel 1.4301 EN 10088 (AISI 304) |
| motor jacket | Chrome-nickel steel 1.4301 EN 10088 (AISI 304) |
| Oil chamber cover | Chrome-nickel steel 1.4301 EN 10088 (AISI 304) |
| Shaft | Chrome-nickel steel 1.4301 EN 10088 (AISI 304) |
| Capacitor cover | Chrome-nickel steel 1.4301 EN 10088 (AISI 304) |
| Upper mechanical seal | Steatite, carbon, NBR |
| Lower mechanical seal | Carbone, carburo di silicio, NBR |
| Seal lubrication oil | Oil for food machinery and pharmaceutic use |

# MXS

calpeda

## Coverage chart n ≈ 2900 rpm

### Three-phase

| | | | | Q = Flow | | | | | | | | | |
|---|---|---|---|---|---|---|---|---|---|---|---|---|---|
| | | | | m³/h | 0 | 1 | 1,5 | 2 | 2,5 | 3 | 3,5 | 4 | 4,5 |
| Model | 400V | P2 | | l/min | | 16,66 | 25 | 33,33 | 41,66 | 50 | 58,33 | 66,66 | 75 |
| | A | kW | HP | H (m) = Total head | | | | | | | | | |
| MXS 303/A | 1,4 | 0,45 | 0,6 | | 32,5 | 29,5 | 27,5 | 25,5 | 23 | 19,5 | 17 | 13 | 10 |
| MXS 304/A | 1,6 | 0,55 | 0,75 | | 44 | 41,5 | 39,5 | 36,5 | 33,5 | 29,5 | 25,5 | 21 | 16 |
| MXS 305/A | 1,9 | 0,75 | 1 | | 53 | 49,5 | 47 | 44 | 40 | 35 | 30 | 25 | 19 |
| MXS 306/A | 2,2 | 0,9 | 1,2 | | 65 | 61 | 58 | 54 | 49 | 43 | 37 | 30,5 | 23 |
| MXS 307/A | 2,6 | 0,9 | 1,2 | | 77,5 | 71 | 66,5 | 61 | 55 | 49 | 42 | 35 | 27 |
| MXS 308/A | 2,8 | 1,1 | 1,5 | | 88,5 | 81,5 | 76 | 70,5 | 64 | 56,5 | 49,5 | 41 | 32 |
| MXS 309/A | 3,8 | 1,5 | 2 | | 100 | 91 | 85 | 78,5 | 70,5 | 62,5 | 54,4 | 45 | 35 |
| MXS 310/A | 4,3 | 1,5 | 2 | | 111 | 101,5 | 95 | 88,5 | 80 | 71 | 62 | 52,5 | 41,5 |

### Single-phase

| | | | | | | | Q = Flow | | | | | | | | | |
|---|---|---|---|---|---|---|---|---|---|---|---|---|---|---|---|---|
| | | | | | | | m³/h | 0 | 1 | 1,5 | 2 | 2,5 | 3 | 3,5 | 4 | 4,5 |
| Model | 230V | Capacitor | | P2 | | P1 | l/min | | 16,6 | 25 | 33,3 | 41,6 | 50 | 58,3 | 66,6 | 75 |
| | A | Vc | uf | kW | HP | kW | H (m) = Total head | | | | | | | | | |
| MXSM 303/A | 3,5 | 450 | 14 | 0,45 | 0,6 | 0,8 | | 32,5 | 29,5 | 27,5 | 25,5 | 23 | 19,5 | 17 | 13 | 10 |
| MXSM 304/A | 4,1 | 450 | 20 | 0,55 | 0,75 | 0,9 | | 44 | 41,5 | 39,5 | 36,5 | 33,5 | 29,5 | 25,5 | 21 | 16 |
| MXSM 305/A | 5 | 450 | 20 | 0,75 | 1 | 1,1 | | 53 | 49,5 | 47 | 44 | 40 | 35 | 30 | 25 | 19 |
| MXSM 306/A | 6 | 450 | 25 | 0,9 | 1,2 | 1,3 | | 65 | 61 | 58 | 54 | 49 | 43 | 37 | 30,5 | 23 |
| MXSM 307/A | 6,6 | 450 | 25 | 0,9 | 1,2 | 1,5 | | 77,5 | 71 | 66,5 | 61 | 55 | 49 | 42 | 35 | 27 |
| MXSM 308/A | 8,3 | 450 | 30 | 1,1 | 1,5 | 1,7 | | 88,5 | 81,5 | 76 | 70,5 | 64 | 56,5 | 49,5 | 41 | 32 |
| MXSM 309/A | 9 | 450 | 30 | 1,5 | 2 | 1,9 | | 100 | 91 | 85 | 78,5 | 70,5 | 62,5 | 54,4 | 45 | 35 |
| MXSM 310/A | 12 | 450 | 35 | 1,5 | 2 | 2,2 | | 111 | 101,5 | 95 | 88,5 | 80 | 71 | 62 | 52,5 | 41,5 |

### Three-phase

| | | | | Q = Flow | | | | | | | | | | |
|---|---|---|---|---|---|---|---|---|---|---|---|---|---|---|
| | | | | m³/h | 0 | 2,5 | 3 | 3,5 | 4 | 4,5 | 5 | 6 | 7 | 8 |
| Model | 400V | P2 | | l/min | | 41,66 | 50 | 58,33 | 66,66 | 75 | 83,33 | 100 | 116 | 133 |
| | A | kW | HP | H (m) = Total head | | | | | | | | | | |
| MXS 503/A | 1,6 | 0,55 | 0,75 | | 32,2 | 28,5 | 27,5 | 26 | 24,5 | 22,5 | 21,5 | 18 | 13,5 | 8 |
| MXS 504/A | 2,2 | 0,9 | 1,2 | | 43 | 39 | 38 | 36,5 | 34,5 | 33 | 30,5 | 25,5 | 19,5 | 13 |
| MXS 505/A | 2,6 | 1,1 | 1,5 | | 53 | 47,5 | 45,5 | 43,5 | 41 | 38,5 | 35,5 | 29,5 | 22 | 13,5 |
| MXS 506/A | 2,8 | 1,1 | 1,5 | | 66,5 | 58 | 55,6 | 53,5 | 51 | 48 | 45 | 36,5 | 27,5 | 16 |
| MXS 507/A | 4 | 1,5 | 2 | | 78,5 | 69,5 | 66,5 | 64 | 61,5 | 58 | 54,5 | 45,5 | 36 | 22 |
| MXS 508/A | 4,3 | 1,5 | 2 | | 88,5 | 78 | 75 | 72 | 68 | 64 | 60 | 50 | 38 | 25 |
| MXS 509/A | 5,6 | 2,2 | 3 | | 101 | 91 | 87,5 | 84 | 80,5 | 75,5 | 71 | 60 | 46,5 | 28,5 |
| MXS 510/A | 5,6 | 2,2 | 3 | | 111 | 100 | 96,5 | 93 | 89 | 84,5 | 80 | 66,5 | 52 | 31 |

### Single-phase

| | | | | | | | Q = Flow | | | | | | | | | | |
|---|---|---|---|---|---|---|---|---|---|---|---|---|---|---|---|---|---|
| | | | | | | | m³/h | 0 | 2,5 | 3 | 3,5 | 4 | 4,5 | 5 | 6 | 7 | 8 |
| Model | 230V | Capacitor | | P2 | | P1 | l/min | | 41,6 | 50 | 58,3 | 66,6 | 75 | 83,3 | 100 | 117 | 133 |
| | A | Vc | uf | kW | HP | kW | H (m) = Total head | | | | | | | | | | |
| MXSM 503/A | 4,1 | 450 | 20 | 0,55 | 0,75 | 0,9 | | 32,2 | 28,5 | 27,5 | 26 | 24,5 | 22,5 | 21,5 | 18 | 13,5 | 8 |
| MXSM 504/A | 6 | 450 | 25 | 0,9 | 1,2 | 1,2 | | 43 | 39 | 38 | 36,5 | 34,5 | 33 | 30,5 | 25,5 | 19,5 | 13 |
| MXSM 505/A | 7 | 450 | 25 | 1,1 | 1,5 | 1,5 | | 53 | 47,5 | 45,5 | 43,5 | 41 | 38,5 | 35,5 | 29,5 | 22 | 13,5 |
| MXSM 506/A | 8,3 | 450 | 30 | 1,1 | 1,5 | 1,7 | | 66,5 | 58 | 55,6 | 53,5 | 51 | 48 | 45 | 36,5 | 27,5 | 16 |
| MXSM 507/A | 12 | 450 | 35 | 1,5 | 2 | 2,2 | | 78,5 | 69,5 | 66,5 | 64 | 61,5 | 58 | 54,5 | 45,5 | 36 | 22 |
| MXSM 508/A | 13 | 450 | 35 | 1,5 | 2 | 2,4 | | 88,5 | 78 | 75 | 72 | 68 | 64 | 60 | 50 | 38 | 25 |
| MXSM 509/A | 14,3 | 450 | 40 | 2,2 | 3 | 2,9 | | 101 | 91 | 87,5 | 84 | 80,5 | 75,5 | 71 | 60 | 46,5 | 28,5 |

# MXS

calpeda

## Three-phase

| | | | | Q = Flow | | | | | | | | |
|---|---|---|---|---|---|---|---|---|---|---|---|---|
| | | | | m³/h | 0 | 5 | 6 | 7 | 8 | 9 | 10 | 11 |
| Model | 400V | P2 | | l/min | | 83,33 | 100 | 116 | 133 | 150 | 166 | 183 |
| | A | kW | HP | H (m) = Total head | | | | | | | | |
| MXS 903/A | 2,6 | 1,1 | 1,5 | | 34 | 28,2 | 26,8 | 25,2 | 23,3 | 21,2 | 18,5 | 15,5 |
| MXS 904/A | 3,8 | 1,5 | 2 | | 45,5 | 39 | 37 | 35 | 32,5 | 30 | 26,5 | 22,5 |
| MXS 905/A | 4,3 | 2,2 | 3 | | 58 | 49 | 46,5 | 45 | 42,5 | 38,5 | 34 | 30 |
| MXS 906/A | 5,6 | 2,2 | 3 | | 70 | 59,5 | 56,5 | 54 | 50,5 | 46,5 | 42 | 37 |
| MXS 907/A | 6,6 | 3 | 4 | | 81 | 71 | 68,5 | 66 | 62 | 58 | 53 | 47 |
| MXS 908/A | 8,5 | 3 | 4 | | 93 | 81 | 78 | 75 | 71 | 66 | 60,5 | 53 |
| MXS 909/A | 8,5 | 3 | 4 | | 105 | 92 | 88 | 84 | 79 | 73,5 | 67,5 | 57,5 |
| MXS 910/A | 8,5 | 3 | 4 | | 117 | 101,2 | 96,5 | 93 | 87,5 | 81,5 | 73,5 | 63,5 |

## Single-phase

| | | | | | | | Q = Flow | | | | | | | | |
|---|---|---|---|---|---|---|---|---|---|---|---|---|---|---|---|
| | | | | | | | m³/h | 0 | 5 | 6 | 7 | 8 | 9 | 10 | 11 |
| Model | 230V | Capacitor | | P2 | | P1 | l/min | | 83,3 | 100 | 117 | 133 | 150 | 167 | 183 |
| | A | Vc | uf | kW | HP | kW | H (m) = Total head | | | | | | | | |
| MXSM 903/A | 7 | 450 | 25 | 1,1 | 1,5 | 1,5 | | 34 | 28,2 | 26,8 | 25,2 | 23,3 | 21,2 | 18,5 | 15,5 |
| MXSM 904/A | 9 | 450 | 30 | 1,5 | 2 | 1,9 | | 45,5 | 39 | 37 | 35 | 32,5 | 30 | 26,5 | 22,5 |
| MXSM 905/A | 13 | 450 | 35 | 2,2 | 3 | 2,4 | | 58 | 49 | 46,5 | 45 | 42,5 | 38,5 | 34 | 30 |
| MXSM 906/A | 14,3 | 450 | 40 | 2,2 | 3 | 2,9 | | 70 | 59,5 | 56,5 | 54 | 50,5 | 46,5 | 42 | 37 |

**P1:** Maximum power input.
**P2:** Rated motor power output.
Tolerances according to UNI EN ISO 9906:2012
**Test results with clean cold water, without gas content.**

## Installation

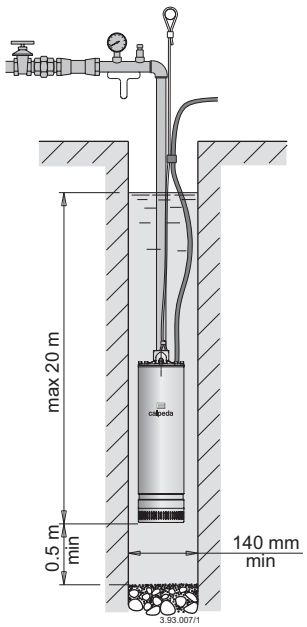


Pump in suspended position

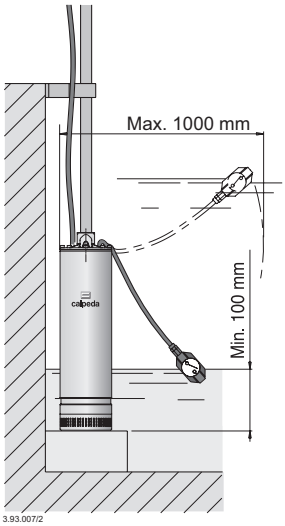


Pump in the standing position

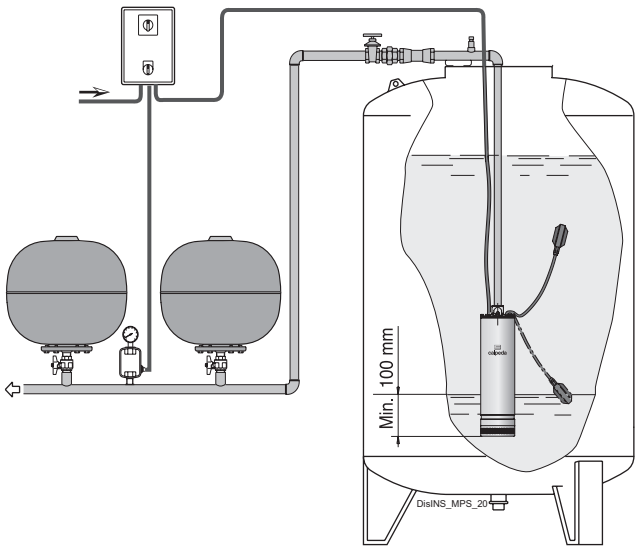


Examples of installations

# MXS

## Dimensions and weights

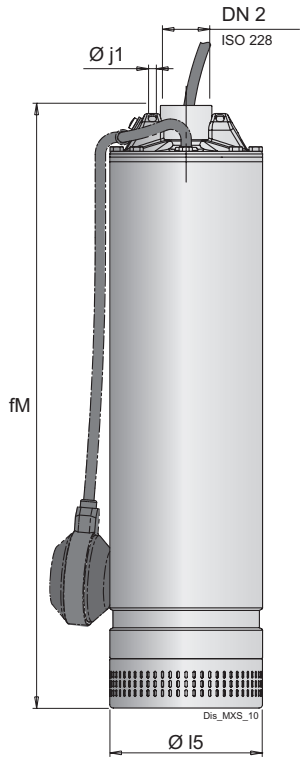


| TYPE | | mm | | | kg |
|---|---|---|---|---|---|
| | DN2 | fM | j1 | l5 | Weight |
| MXS 303/A | G 1 1/4 | 465 | 7 | 133 | 11.6 |
| MXS 304/A | G 1 1/4 | 504 | 7 | 133 | - |
| MXS 305/A | G 1 1/4 | 553 | 7 | 133 | 13.6 |
| MXS 306/A | G 1 1/4 | 601 | 7 | 133 | 15.3 |
| MXS 307/A | G 1 1/4 | 601 | 7 | 133 | 15.6 |
| MXS 308/A | G 1 1/4 | 671 | 7 | 133 | - |
| MXS 309/A | G 1 1/4 | 768 | 7 | 133 | - |
| MXS 310/A | G 1 1/4 | 768 | 7 | 133 | - |
| MXS 503/A | G 1 1/4 | 504 | 7 | 133 | - |
| MXS 504/A | G 1 1/4 | 553 | 7 | 133 | 14 |
| MXS 505/A | G 1 1/4 | 553 | 7 | 133 | 14.6 |
| MXS 506/A | G 1 1/4 | 622 | 7 | 133 | 17.2 |
| MXS 507/A | G 1 1/4 | 671 | 7 | 133 | - |
| MXS 508/A | G 1 1/4 | 768 | 7 | 133 | 20.7 |
| MXS 509/A | G 1 1/4 | 768 | 7 | 133 | - |
| MXS 510/A | G 1 1/4 | 768 | 7 | 133 | - |
| MXS 903/A | G 1 1/4 | 553 | 7 | 133 | - |
| MXS 904/A | G 1 1/4 | 573 | 7 | 133 | 16.1 |
| MXS 905/A | G 1 1/4 | 653 | 7 | 133 | 14.6 |
| MXS 906/A | G 1 1/4 | 738 | 7 | 133 | 22.2 |
| MXS 907/A | G 1 1/4 | 738 | 7 | 133 | - |
| MXS 908/A | G 1 1/4 | 853 | 7 | 133 | - |
| MXS 909/A | G 1 1/4 | 853 | 7 | 133 | - |
| MXS 910/A | G 1 1/4 | 853 | 7 | 133 | - |

**MXSM ... CG**
With float switch pump (on demand)

| TYPE | | mm | | | kg |
|---|---|---|---|---|---|
| | DN2 | fM | j1 | l5 | Weight |
| MXSM 303/A | G 1 1/4 | 465 | 7 | 133 | - |
| MXSM 304/A | G 1 1/4 | 504 | 7 | 133 | - |
| MXSM 305/A | G 1 1/4 | 553 | 7 | 133 | 15.5 |
| MXSM 306/A | G 1 1/4 | 601 | 7 | 133 | 15.5 |
| MXSM 307/A | G 1 1/4 | 601 | 7 | 133 | 17.1 |
| MXSM 308/A | G 1 1/4 | 671 | 7 | 133 | - |
| MXSM 309/A | G 1 1/4 | 768 | 7 | 133 | - |
| MXSM 310/A | G 1 1/4 | 768 | 7 | 133 | - |
| MXSM 503/A | G 1 1/4 | 504 | 7 | 133 | - |
| MXSM 504/A | G 1 1/4 | 553 | 7 | 133 | 15.8 |
| MXSM 505/A | G 1 1/4 | 553 | 7 | 133 | 15.9 |
| MXSM 506/A | G 1 1/4 | 622 | 7 | 133 | 18.6 |
| MXSM 507/A | G 1 1/4 | 671 | 7 | 133 | - |
| MXSM 508/A | G 1 1/4 | 768 | 7 | 133 | 24.5 |
| MXSM 509/A | G 1 1/4 | 768 | 7 | 133 | - |
| MXSM 903/A | G 1 1/4 | 553 | 7 | 133 | - |
| MXSM 904/A | G 1 1/4 | 573 | 7 | 133 | 17.7 |
| MXSM 905/A | G 1 1/4 | 653 | 7 | 133 | - |
| MXSM 906/A | G 1 1/4 | 738 | 7 | 133 | 24.9 |

With cable length: 15m

# MXS

calpeda®

## Characteristic curves n ≈ 2900 rpm

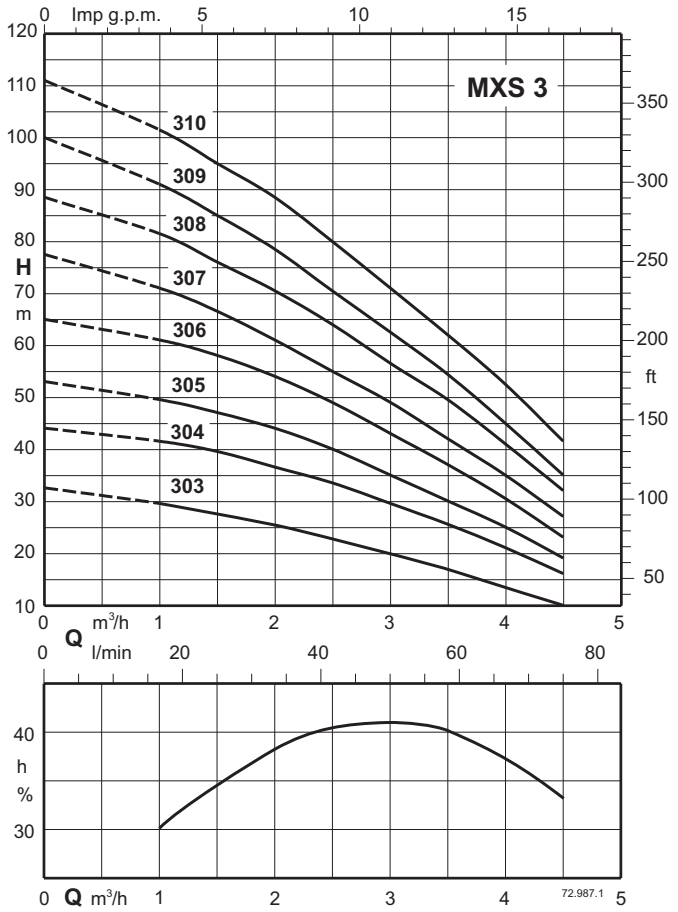


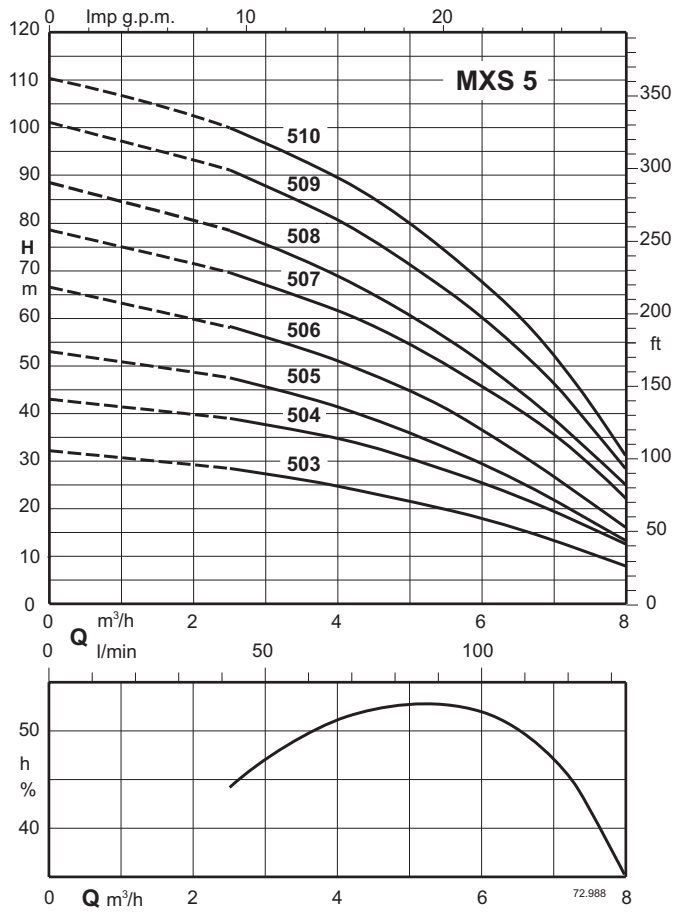


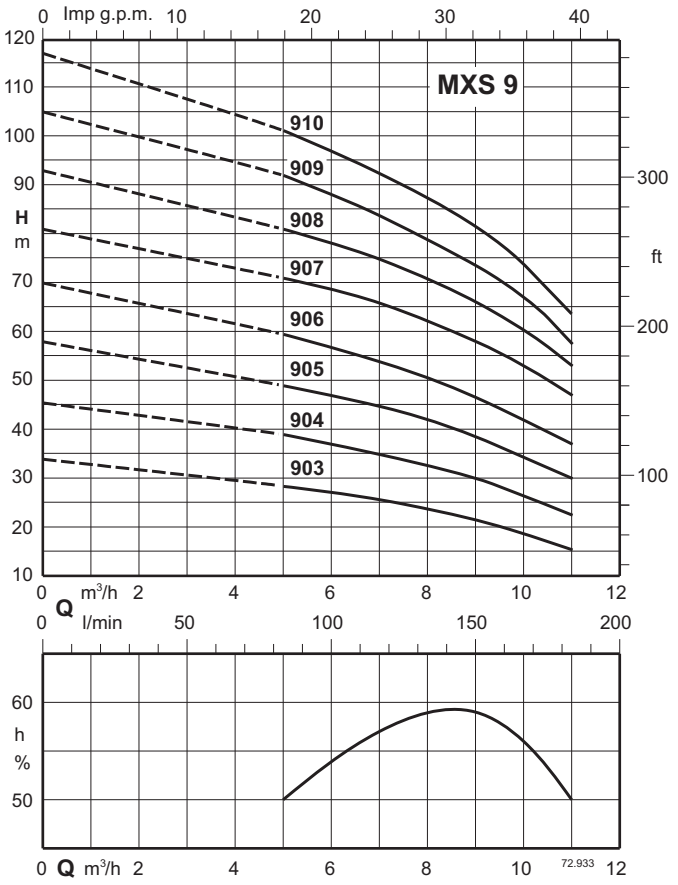

# SDP

**Coverage chart n ≈ 2900 rpm**

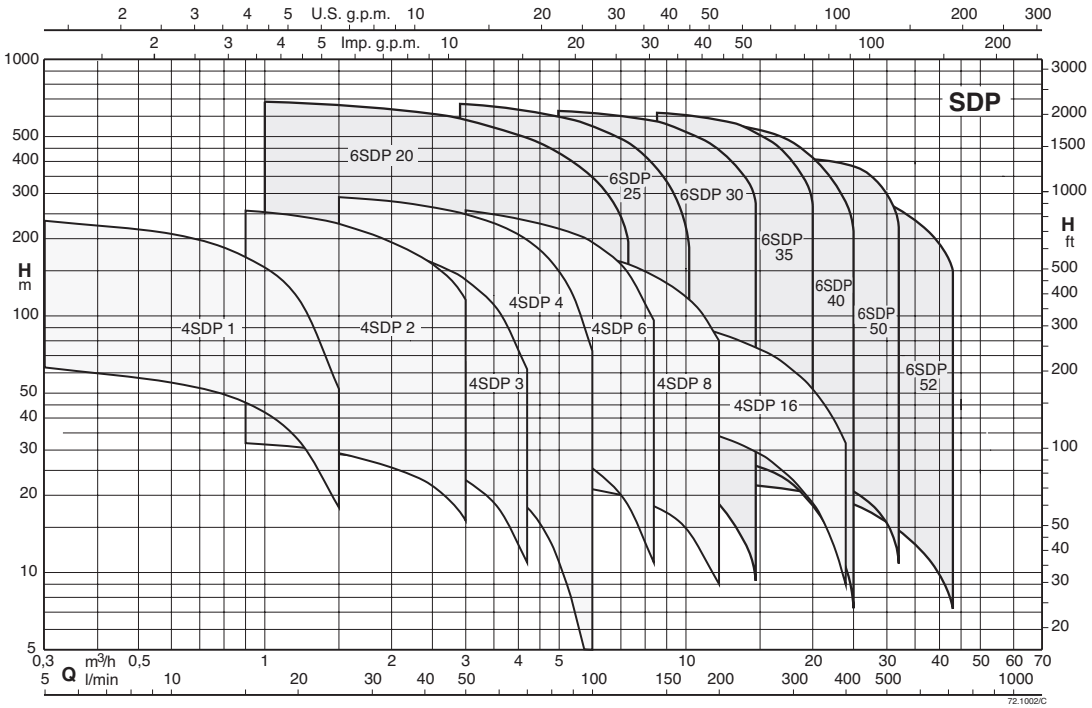


# Submersible borehole pumps for 4” and 6” wells

# SDP

## Construction

Submersible borehole pumps for 4” wells (DN 100 mm), and 6” (DN 150 mm), with external jacket in stainless steel AISI 304.
Impellers
radial floating impellers 4SDP
Radial impellers: 6SDP
Connection: screwed connection ISO 228.
Delivery casing with built-in non-return valve.

## Applications

For water supply systems.
For civil and industrial applications.
For fire fighting applications.
For irrigation.

## Operating conditions

PUMP
Liquid temperature:
up to a 35 °C for 4” motors
up to 30 °C for 6” motors.
Maximum amount of sand in the water:
150 g/m3 for 4SDP and 300 g/m3 for 6SDP.
- 300 g/m3 high percentage of solids and sand.
Continuous duty.

## Designation

Example: 4SDPM 6/14 - 6SDP 52/3A 4SM
4 = Ø of the well in inches
SDP = Series
M = Single-phase (without three-phase indication)
6 = Stage identification
14 = Number of impellers
4SM = Motor flange coupling

**The electropumps 4SDP 1,2,3,6 series comply with the European Regulation no. 547/2012.**

## Motor

2-pole induction motor, 50 Hz (n ≈ 2900 rpm).
**Sized for connection to the pumps according to NEMA Standards.**
Standard voltages:
single-phase - single-phase 230 V up to 2,2 kW for 4” motors.
three-phase - three-phase 230 V; 400 V, for 4” motors.
- three-phase 400 V; 400/690 V, for 6” motors.
Voltage tolerance : ± 10%
In order to limit both current and torque at each starting, for rated motor powers equal to or higher than 7.5 kW, one of the following types of starting is necessary: star/delta, soft starter, stator impedance or autotransformer.
Insulation class: F for motors 4”
Protection IP 68.
Continuous duty.
Motor suitable operation with frequency converter (with suitable filter dv/dt).

| Motor | Motor P2 | Max. Liquid temperature | Cooling minimum flow velocity | Max n° of starting x hour |
|---|---|---|---|---|
| 4CS-R | all | 35 °C | 0,1 m/s | 30 |
| 6CS-R | 4÷15 kW | 40 °C | 0,5 m/s | 20 |
| 6CS-R | 18,5÷30 kW | 35 °C | 0,5 m/s | 20 |
| 6CS-R | 37 kW | 30 °C | 0,5 m/s | 20 |

## Special features on request

Other voltages.
Frequency 60 Hz (as per 60 Hz data sheet).
High temperatures.
Encapsulated motor FK series.

## Materials

| Components | 4SDP | 6SDP |
|---|---|---|
| External jacket | Chrome-nickel steel 1.4301 EN 10088 (AISI 304) | Chrome-nickel steel 1.4301 EN 10088 (AISI 304) |
| Stage casing | Chrome-nickel steel 1.4301 EN 10088 (AISI 304) | Chrome-nickel steel 1.4301 EN 10088 (AISI 304) |
| Diffuser | Polycarbonate | GFN2V* (NORYL®) |
| Impeller | GFN2V* (NORYL®) | LEXAN |
| Shaft | Chrome-nickel steel 1.4301 EN 10088 (AISI 304) | Steel 1.44057 EN 10088 (AISI 431) |
| delivery casing | Chrome-nickel steel 1.4301 EN 10088 (AISI 304) | Chrome-nickel steel 1.4301 EN 10088 (AISI 304) |
| Suction lantern | Chrome-nickel steel 1.4301 EN 10088 (AISI 304) | Chrome-nickel steel 1.4301 EN 10088 (AISI 304) |
| Bearing bush | POM - POLYACETAL | NBR/HNBR |
| Filter | Chrome-nickel steel 1.4301 EN 10088 (AISI 304) | Chrome-nickel steel 1.4301 EN 10088 (AISI 304) |
| Screws | Chrome-nickel steel 1.4301 EN 10088 (AISI 304) | Chrome-nickel steel 1.4301 EN 10088 (AISI 304) |

* Trademark of General Electric

# SDP

calpeda®

## Coverage chart n ≈ 2900 rpm

### Three-phase

| Model | 400V | P2 | | Q = Flow | | | | | | | | | | | | | | | |
|---|---|---|---|---|---|---|---|---|---|---|---|---|---|---|---|---|---|---|---|
| | | | | m³/h | 0 | 0,3 | 0,6 | 0,9 | 1,2 | 1,5 | 1,8 | 2,1 | 2,4 | 2,7 | 3 | 3,6 | 4,2 | 4,8 | 6 |
| | | | | l/min | | 5 | 10 | 15 | 20 | 25 | 30 | 35 | 40 | 45 | 50 | 60 | 70 | 80 | 100 |
| | A | kW | HP | H (m) = Total head | | | | | | | | | | | | | | | |
| 4SDP 1/10C | 1,7 | 0,37 | 0,5 | | 67 | 63 | 55 | 46 | 33 | 18 | - | - | - | - | - | - | - | - | - |
| 4SDP 1/13C | 1,7 | 0,37 | 0,5 | | 86 | 78 | 70 | 56 | 42 | 23 | - | - | - | - | - | - | - | - | - |
| 4SDP 1/19C | 2 | 0,55 | 0,75 | | 126 | 118 | 105 | 86 | 60 | 30 | - | - | - | - | - | - | - | - | - |
| 4SDP 1/26C | 2,5 | 0,75 | 1 | | 173 | 160 | 141 | 117 | 81 | 39 | - | - | - | - | - | - | - | - | - |
| 4SDP 1/38C | 3,3 | 1,1 | 1,5 | | 253 | 234 | 208 | 169 | 117 | 52 | - | - | - | - | - | - | - | - | - |
| 4SDP 2/5C | 1,7 | 0,37 | 0,5 | | 34 | - | - | 32 | 31 | 29 | 27 | 25 | 23 | 19 | 16 | - | - | - | - |
| 4SDP 2/7C | 1,7 | 0,37 | 0,5 | | 46 | - | - | 43 | 42 | 39 | 36 | 33 | 29 | 26 | 22 | - | - | - | - |
| 4SDP 2/10C | 2 | 0,55 | 0,75 | | 67 | - | - | 64 | 61 | 58 | 54 | 49 | 43 | 36 | 28 | - | - | - | - |
| 4SDP 2/14C | 2,5 | 0,75 | 1 | | 92 | - | - | 86 | 83 | 79 | 74 | 67 | 60 | 52 | 42 | - | - | - | - |
| 4SDP 2/20C | 3,3 | 1,1 | 1,5 | | 139 | - | - | 131 | 127 | 120 | 111 | 101 | 90 | 75 | 60 | - | - | - | - |
| 4SDP 2/28C | 4,4 | 1,5 | 2 | | 189 | - | - | 178 | 172 | 164 | 153 | 140 | 126 | 108 | 90 | - | - | - | - |
| 4SDP 2/40C | 6,1 | 2,2 | 3 | | 265 | - | - | 247 | 237 | 224 | 208 | 189 | 170 | 147 | 120 | - | - | - | - |
| 4SDP 3/5C | 1,7 | 0,37 | 0,5 | | 34 | - | - | - | 32 | 31 | 30 | 29 | 27 | 25 | 23 | 18 | 11 | - | - |
| 4SDP 3/8C | 2 | 0,55 | 0,75 | | 54 | - | - | - | 51 | 50 | 49 | 46 | 43 | 41 | 38 | 30 | 19 | - | - |
| 4SDP 3/11C | 2,5 | 0,75 | 1 | | 72 | - | - | - | 68 | 66 | 64 | 61 | 58 | 54 | 49 | 38 | 26 | - | - |
| 4SDP 3/16C | 3,3 | 1,1 | 1,5 | | 106 | - | - | - | 101 | 98 | 95 | 89 | 83 | 77 | 70 | 54 | 33 | - | - |
| 4SDP 3/21C | 4,4 | 1,5 | 2 | | 142 | - | - | - | 135 | 132 | 127 | 122 | 115 | 108 | 100 | 79 | 49 | - | - |
| 4SDP 3/32C | 6,1 | 2,2 | 3 | | 208 | - | - | - | 200 | 194 | 187 | 177 | 165 | 152 | 138 | 104 | 62 | - | - |
| 4SDP 4/5C | 1,7 | 0,37 | 0,5 | | 33 | - | - | - | - | 29 | 28 | 27 | 26 | - | 24 | 21 | 18 | 13 | 3 |
| 4SDP 4/7C | 2 | 0,55 | 0,75 | | 46 | - | - | - | - | 43 | 42 | 41 | 39 | - | 36 | 33 | 28 | 22 | 7 |
| 4SDP 4/9C | 2,5 | 0,75 | 1 | | 59 | - | - | - | - | 55 | 54 | 52 | 51 | - | 47 | 43 | 37 | 28 | 10 |
| 4SDP 4/14C | 3,3 | 1,1 | 1,5 | | 93 | - | - | - | - | 87 | 86 | 83 | 81 | - | 76 | 68 | 58 | 47 | 20 |
| 4SDP 4/18C | 4,4 | 1,5 | 2 | | 120 | - | - | - | - | 113 | 111 | 108 | 105 | - | 98 | 88 | 75 | 60 | 25 |
| 4SDP 4/27C | 6,1 | 2,2 | 3 | | 175 | - | - | - | - | 164 | 161 | 157 | 152 | - | 141 | 127 | 109 | 87 | 35 |
| 4SDP 4/35C | 6,9 | 3 | 4 | | 228 | - | - | - | - | 212 | 208 | 203 | 197 | - | 184 | 166 | 145 | 119 | 46 |
| 4SDP 4/44C | 9,4 | 4 | 5,5 | | 282 | - | - | - | - | 261 | 255 | 249 | 241 | - | 223 | 201 | 173 | 140 | 52 |
| 4SDP 4/48C | 9,4 | 4 | 5,5 | | 309 | - | - | - | - | 289 | 283 | 276 | 267 | - | 248 | 225 | 197 | 162 | 73 |

| Model | 400V | P2 | | Q = Flow | | | | | | | | | | | | | | | | |
|---|---|---|---|---|---|---|---|---|---|---|---|---|---|---|---|---|---|---|---|---|
| | | | | m³/h | 0 | 3 | 3,6 | 4,2 | 4,8 | 5,4 | 6 | 7,2 | 8,4 | 9,6 | 10,8 | 12 | 13,2 | 18 | 21,5 | 24 |
| | | | | l/min | | 50 | 60 | 70 | 80 | 90 | 100 | 120 | 140 | 160 | 180 | 200 | 220 | 300 | 358 | 400 |
| | A | kW | HP | H (m) = Total head | | | | | | | | | | | | | | | | |
| 4SDP 6/7C | 2,5 | 0,75 | 1 | | 42 | 36 | 34 | 32 | 30 | 28 | 25 | 19 | 11 | - | - | - | - | - | - | - |
| 4SDP 6/10C | 3,3 | 1,1 | 1,5 | | 62 | 53 | 51 | 48 | 45 | 41 | 38 | 29 | 18 | - | - | - | - | - | - | - |
| 4SDP 6/14C | 4,4 | 1,5 | 2 | | 90 | 77 | 74 | 71 | 68 | 63 | 59 | 46 | 28 | - | - | - | - | - | - | - |
| 4SDP 6/20C | 6,1 | 2,2 | 3 | | 125 | 107 | 102 | 97 | 92 | 86 | 80 | 62 | 40 | - | - | - | - | - | - | - |
| 4SDP 6/27C | 6,9 | 3 | 4 | | 169 | 145 | 139 | 131 | 123 | 115 | 107 | 84 | 55 | - | - | - | - | - | - | - |
| 4SDP 6/34C | 9,4 | 4 | 5,5 | | 208 | 178 | 170 | 162 | 153 | 143 | 132 | 103 | 66 | - | - | - | - | - | - | - |
| 4SDP 6/36C | 9,4 | 4 | 5,5 | | 221 | 190 | 181 | 173 | 164 | 154 | 143 | 112 | 72 | - | - | - | - | - | - | - |
| 4SDP 6/49C | 13,4 | 5,5 | 7,5 | | 302 | 257 | 246 | 234 | 222 | 209 | 193 | 151 | 96 | - | - | - | - | - | - | - |
| 4SDP 8/4C | 2,5 | 0,75 | 1 | | 26 | - | - | - | 23 | 22 | 21 | 20 | 18 | 16 | 12 | 9 | - | - | - | - |
| 4SDP 8/6C | 3,3 | 1,1 | 1,5 | | 38 | - | - | - | 35 | 34 | 33 | 31 | 28 | 24 | 19 | 14 | - | - | - | - |
| 4SDP 8/8C | 4,4 | 1,5 | 2 | | 52 | - | - | - | 47 | 45 | 44 | 41 | 37 | 31 | 25 | 18 | - | - | - | - |
| 4SDP 8/13C | 6,1 | 2,2 | 3 | | 82 | - | - | - | 75 | 73 | 71 | 66 | 59 | 50 | 40 | 30 | - | - | - | - |
| 4SDP 8/17C | 6,9 | 3 | 4 | | 108 | - | - | - | 98 | 96 | 94 | 87 | 79 | 70 | 58 | 46 | - | - | - | - |
| 4SDP 8/21C | 9,4 | 4 | 5,5 | | 132 | - | - | - | 117 | 114 | 111 | 103 | 93 | 82 | 68 | 52 | - | - | - | - |
| 4SDP 8/23C | 9,4 | 4 | 5,5 | | 148 | - | - | - | 134 | 131 | 127 | 118 | 108 | 95 | 79 | 60 | - | - | - | - |
| 4SDP 8/32C | 13,4 | 5,5 | 7,5 | | 202 | - | - | - | 182 | 178 | 172 | 160 | 143 | 125 | 105 | 80 | - | - | - | - |
| 4SDP 16/8C | 6,1 | 2,2 | 3 | | 49 | - | - | - | - | - | - | - | 39 | 38 | 36 | 34 | 32 | 23 | 15 | 9 |
| 4SDP 16/11C | 6,9 | 3 | 4 | | 67 | - | - | - | - | - | - | - | 55 | 53 | 50 | 48 | 45 | 33 | 23 | 16 |
| 4SDP 16/13C | 9,4 | 4 | 5,5 | | 79 | - | - | - | - | - | - | - | 65 | 62 | 59 | 56 | 53 | 40 | 28 | 20 |
| 4SDP 16/15C | 9,4 | 4 | 5,5 | | 93 | - | - | - | - | - | - | - | 76 | 73 | 70 | 66 | 62 | 47 | 34 | 25 |
| 4SDP 16/20C | 13,4 | 5,5 | 7,5 | | 122 | - | - | - | - | - | - | - | 99 | 95 | 90 | 86 | 81 | 61 | 44 | 32 |
| 4SDP 16/27C | 16,4 | 7,5 | 10 | | 161 | - | - | - | - | - | - | - | 130 | 125 | 120 | 114 | 109 | 81 | 57 | 39 |

**P2:** Rated motor power output.
**H:** Total head in m

# SDP

calpeda®

## Coverage chart n ≈ 2900 rpm

### Single-phase

| | | | | | | | Q = Flow | | | | | | | | | | | | | | | |
|---|---|---|---|---|---|---|---|---|---|---|---|---|---|---|---|---|---|---|---|---|---|---|
| | | | | | | | m³/h | 0 | 0,3 | 0,6 | 0,9 | 1,2 | 1,5 | 1,8 | 2,1 | 2,4 | 2,7 | 3 | 3,6 | 4,2 | 4,8 | 6 |
| Model | 230V | Capacitor | | P2 | | P1 | l/min | | 5 | 10 | 15 | 20 | 25 | 30 | 35 | 40 | 45 | 50 | 60 | 70 | 80 | 100 |
| | A | Vc | uf | kW | HP | kW | H (m) = Total head | | | | | | | | | | | | | | | |
| 4SDPM 1/10C | 3,6 | 450 | 20 | 0,37 | 0,5 | 0,71 | | 67 | 63 | 55 | 46 | 33 | 18 | - | - | - | - | - | - | - | - | - |
| 4SDPM 1/13C | 3,6 | 450 | 20 | 0,37 | 0,5 | 0,71 | | 86 | 78 | 70 | 56 | 42 | 23 | - | - | - | - | - | - | - | - | - |
| 4SDPM 1/19C | 4,7 | 450 | 25 | 0,55 | 0,75 | 0,91 | | 126 | 118 | 105 | 86 | 60 | 30 | - | - | - | - | - | - | - | - | - |
| 4SDPM 1/26C | 5,6 | 450 | 35 | 0,75 | 1 | 1,24 | | 173 | 160 | 141 | 117 | 81 | 39 | - | - | - | - | - | - | - | - | - |
| 4SDPM 1/38C | 7,6 | 450 | 40 | 1,1 | 1,5 | 1,71 | | 253 | 234 | 208 | 169 | 117 | 52 | - | - | - | - | - | - | - | - | - |
| 4SDPM 2/5C | 3,6 | 450 | 20 | 0,37 | 0,5 | 0,71 | | 34 | - | - | 32 | 31 | 29 | 27 | 25 | 23 | 19 | 16 | - | - | - | - |
| 4SDPM 2/7C | 3,6 | 450 | 20 | 0,37 | 0,5 | 0,71 | | 46 | - | - | 43 | 42 | 39 | 36 | 33 | 29 | 26 | 22 | - | - | - | - |
| 4SDPM 2/10C | 4,7 | 450 | 25 | 0,55 | 0,75 | 0,91 | | 67 | - | - | 64 | 61 | 58 | 54 | 49 | 43 | 36 | 28 | - | - | - | - |
| 4SDPM 2/14C | 5,6 | 450 | 35 | 0,75 | 1 | 1,24 | | 92 | - | - | 86 | 83 | 79 | 74 | 67 | 60 | 52 | 42 | - | - | - | - |
| 4SDPM 2/20C | 7,6 | 450 | 40 | 1,1 | 1,5 | 1,71 | | 139 | - | - | 131 | 127 | 120 | 111 | 101 | 90 | 75 | 60 | - | - | - | - |
| 4SDPM 2/28C | 10,7 | 450 | 60 | 1,5 | 2 | 2,33 | | 189 | - | - | 178 | 172 | 164 | 153 | 140 | 126 | 108 | 90 | - | - | - | - |
| 4SDPM 2/40C | 14,6 | 450 | 80 | 2,2 | 3 | 3,25 | | 265 | - | - | 247 | 237 | 224 | 208 | 189 | 170 | 147 | 120 | - | - | - | - |
| 4SDPM 3/5C | 3,6 | 450 | 20 | 0,37 | 0,5 | 0,71 | | 34 | - | - | - | 32 | 31 | 30 | 29 | 27 | 25 | 23 | 18 | 11 | - | - |
| 4SDPM 3/8C | 4,7 | 450 | 25 | 0,55 | 0,75 | 0,91 | | 54 | - | - | - | 51 | 50 | 49 | 46 | 43 | 41 | 38 | 30 | 19 | - | - |
| 4SDPM 3/11C | 5,6 | 450 | 35 | 0,75 | 1 | 1,24 | | 72 | - | - | - | 68 | 66 | 64 | 61 | 58 | 54 | 49 | 38 | 26 | - | - |
| 4SDPM 3/16C | 7,6 | 450 | 40 | 1,1 | 1,5 | 1,71 | | 106 | - | - | - | 101 | 98 | 95 | 89 | 83 | 77 | 70 | 54 | 33 | - | - |
| 4SDPM 3/21C | 10,7 | 450 | 60 | 1,5 | 2 | 2,33 | | 142 | - | - | - | 135 | 132 | 127 | 122 | 115 | 108 | 100 | 79 | 49 | - | - |
| 4SDPM 3/32C | 14,6 | 450 | 80 | 2,2 | 3 | 3,25 | | 208 | - | - | - | 200 | 194 | 187 | 177 | 165 | 152 | 138 | 104 | 62 | - | - |
| 4SDPM 4/5C | 3,6 | 450 | 20 | 0,37 | 0,5 | 0,71 | | 33 | - | - | - | - | 29 | 28 | 27 | 26 | - | 24 | 21 | 18 | 13 | 3 |
| 4SDPM 4/7C | 4,7 | 450 | 25 | 0,55 | 0,75 | 0,91 | | 46 | - | - | - | - | 43 | 42 | 41 | 39 | - | 36 | 33 | 28 | 22 | 7 |
| 4SDPM 4/9C | 5,6 | 450 | 35 | 0,75 | 1 | 1,24 | | 59 | - | - | - | - | 55 | 54 | 52 | 51 | - | 47 | 43 | 37 | 28 | 10 |
| 4SDPM 4/14C | 7,6 | 450 | 40 | 1,1 | 1,5 | 1,71 | | 93 | - | - | - | - | 87 | 86 | 83 | 81 | - | 76 | 68 | 58 | 47 | 20 |
| 4SDPM 4/18C | 10,7 | 450 | 60 | 1,5 | 2 | 2,33 | | 120 | - | - | - | - | 113 | 111 | 108 | 105 | - | 98 | 88 | 75 | 60 | 25 |
| 4SDPM 4/27C | 14,6 | 450 | 80 | 2,2 | 3 | 3,25 | | 175 | - | - | - | - | 164 | 161 | 157 | 152 | - | 141 | 127 | 109 | 87 | 35 |

| | | | | | | | Q = Flow | | | | | | | | | | | | | | | |
|---|---|---|---|---|---|---|---|---|---|---|---|---|---|---|---|---|---|---|---|---|---|---|
| | | | | | | | m³/h | 0 | 3 | 3,6 | 4,2 | 4,8 | 5,4 | 6 | 7,2 | 8,4 | 9,6 | 10,8 | 12 | 13,2 | 18 | 24 |
| Model | 230V | Capacitor | | P2 | | P1 | l/min | | 50 | 60 | 70 | 80 | 90 | 100 | 120 | 140 | 160 | 180 | 200 | 220 | 300 | 400 |
| | A | Vc | uf | kW | HP | kW | H (m) = Total head | | | | | | | | | | | | | | | |
| 4SDPM 6/7C | 5,6 | 450 | 35 | 0,75 | 1 | 1,24 | | 42 | 36 | 34 | 32 | 30 | 28 | 25 | 19 | 11 | - | - | - | - | - | - |
| 4SDPM 6/10C | 7,6 | 450 | 40 | 1,1 | 1,5 | 1,71 | | 62 | 53 | 51 | 48 | 45 | 41 | 38 | 29 | 18 | - | - | - | - | - | - |
| 4SDPM 6/14C | 10,7 | 450 | 60 | 1,5 | 2 | 2,33 | | 90 | 77 | 74 | 71 | 68 | 63 | 59 | 46 | 28 | - | - | - | - | - | - |
| 4SDPM 6/20C | 14,6 | 450 | 80 | 2,2 | 3 | 3,25 | | 125 | 107 | 102 | 97 | 92 | 86 | 80 | 62 | 40 | - | - | - | - | - | - |
| 4SDPM 8/4C | 5,6 | 450 | 35 | 0,75 | 1 | 1,24 | | 26 | - | - | - | 23 | 22 | 21 | 20 | 18 | 16 | 12 | 9 | - | - | - |
| 4SDPM 8/6C | 7,6 | 450 | 40 | 1,1 | 1,5 | 1,71 | | 38 | - | - | - | 35 | 34 | 33 | 31 | 28 | 24 | 19 | 14 | - | - | - |
| 4SDPM 8/8C | 10,7 | 450 | 60 | 1,5 | 2 | 2,33 | | 52 | - | - | - | 47 | 45 | 44 | 41 | 37 | 31 | 25 | 18 | - | - | - |
| 4SDPM 8/13C | 14,6 | 450 | 80 | 2,2 | 3 | 3,25 | | 82 | - | - | - | 75 | 73 | 71 | 66 | 59 | 50 | 40 | 30 | - | - | - |
| 4SDPM 16/8C | 14,6 | 450 | 80 | 2,2 | 3 | 3,25 | | 49 | - | - | - | - | - | - | - | 39 | 38 | 36 | 34 | 32 | 23 | 9 |

**P2:** Rated motor power output.
**H:** Total head in m

# SDP

calpeda®

## Coverage chart n ≈ 2900 rpm

### Three-phase

| Model | P2 | | Q = Flow | | | | | | | | | | | | | | |
|---|---|---|---|---|---|---|---|---|---|---|---|---|---|---|---|---|---|
| | | | m³/h | 0 | 1,5 | 2 | 2,5 | 3 | 3,5 | 4 | 4,5 | 5 | 5,5 | 6 | 6,5 | 7 | 7,2 |
| | | | l/min | | 25 | 33.3 | 41.7 | 50 | 58.3 | 66.7 | 75 | 83.3 | 91.7 | 100 | 108 | 117 | 120 |
| | kW | HP | H (m) = Total head | | | | | | | | | | | | | | |
| 6SDP 20/9 4SM | 1,1 | 1,5 | | 79,6 | 72 | 69,7 | 67 | 63,9 | 60,1 | 55,8 | 51,1 | 46,2 | 41,1 | 36 | - | - | - |
| 6SDP 20/12 4SM | 1.5 | 2 | | 106 | 96,8 | 93,9 | 90,7 | 86,8 | 82,1 | 76,6 | 70,4 | 63,7 | 56,8 | 49,7 | - | - | - |
| 6SDP 20/18 4SM | 2,2 | 3 | | 158 | 144 | 140 | 135 | 129 | 122 | 113 | 104 | 92,8 | 82,3 | 72 | - | - | - |
| 6SDP 20/24 4SM | 3 | 4 | | 210 | 192 | 185 | 178 | 170 | 160 | 149 | 136 | 123 | 110 | 95,4 | - | - | - |
| 6SDP 20/30 4SM | 4 | 5,5 | | 274 | 253 | 246 | 238 | 228 | 216 | 201 | 185 | 169 | 151 | 134 | 115 | 94 | 84,4 |
| 6SDP 20/30 6SM | 4 | 5,5 | | 274 | 253 | 246 | 238 | 228 | 216 | 201 | 185 | 169 | 151 | 134 | 115 | 94 | 84,4 |
| 6SDP 20/36 6SM | 5.5 | 7.5 | | 329 | 304 | 295 | 285 | 273 | 259 | 242 | 224 | 203 | 182 | 161 | 138 | 113 | 102 |
| 6SDP 20/40 6SM | 5.5 | 7.5 | | 364 | 334 | 326 | 315 | 302 | 286 | 267 | 245 | 222 | 199 | 175 | 151 | 123 | 111 |
| 6SDP 20/44 6SM | 5.5 | 7.5 | | 392 | 358 | 348 | 336 | 321 | 303 | 282 | 258 | 233 | 208 | 182 | 156 | 127 | 113 |
| 6SDP 20/50 6SM | 7.5 | 10 | | 458 | 430 | 416 | 400 | 382 | 362 | 339 | 314 | 288 | 259 | 228 | 196 | 160 | 145 |
| 6SDP 20/56 6SM | 7.5 | 10 | | 512 | 474 | 462 | 447 | 427 | 404 | 377 | 347 | 316 | 283 | 250 | 215 | 177 | 159 |
| 6SDP 20/63 6SM | 9,2 | 12,5 | | 572 | 533 | 516 | 496 | 473 | 447 | 418 | 386 | 352 | 317 | 280 | 240 | 194 | 173 |
| 6SDP 20/70 6SM | 9,2 | 12,5 | | 633 | 587 | 568 | 545 | 519 | 489 | 457 | 423 | 386 | 346 | 302 | 256 | 206 | 185 |
| 6SDP 20/76 6SM | 11 | 15 | | 691 | 644 | 623 | 599 | 570 | 539 | 503 | 465 | 425 | 382 | 337 | 288 | 233 | 209 |

| Model | P2 | | Q = Flow | | | | | | | | | | | | | | |
|---|---|---|---|---|---|---|---|---|---|---|---|---|---|---|---|---|---|
| | | | m³/h | 0 | 3,6 | 4 | 4,5 | 5 | 5,5 | 6 | 6,7 | 7 | 7,5 | 8 | 8,5 | 9 | 9,2 |
| | | | l/min | | 60 | 66.7 | 75 | 83.3 | 91.7 | 100 | 112 | 117 | 125 | 133 | 142 | 150 | 153 |
| | kW | HP | H (m) = Total head | | | | | | | | | | | | | | |
| 6SDP 25/7 4SM | 1.5 | 2 | | 74,7 | 67,9 | 66,5 | 64,4 | 61,9 | 59 | 55,8 | 50,7 | 48,3 | 44,3 | 40,1 | 35,8 | 31,3 | 29,5 |
| 6SDP 25/10 4SM | 2,2 | 3 | | 106 | 95,3 | 93,1 | 89,8 | 86,2 | 82,1 | 77,6 | 70,7 | 67,5 | 61,9 | 56 | 49,8 | 43,2 | 40,5 |
| 6SDP 25/13 4SM | 3 | 4 | | 139 | 127 | 124 | 119 | 115 | 109 | 104 | 94,2 | 90,1 | 82,8 | 75,1 | 66,8 | 58,1 | 54,6 |
| 6SDP 25/17 4SM | 4 | 5,5 | | 177 | 168 | 165 | 160 | 153 | 146 | 138 | 126 | 120 | 110 | 98,5 | 87,1 | 75 | 69,8 |
| 6SDP 25/17 6SM | 4 | 5,5 | | 188 | 173 | 169 | 164 | 158 | 152 | 145 | 133 | 128 | 119 | 109 | 97,8 | 86,5 | 81,9 |
| 6SDP 25/21 4SM | 5.5 | 7.5 | | 217 | 204 | 199 | 193 | 185 | 177 | 168 | 153 | 146 | 134 | 121 | 107 | 91,8 | 85,7 |
| 6SDP 25/21 6SM | 5.5 | 7.5 | | 231 | 212 | 208 | 202 | 195 | 187 | 178 | 164 | 157 | 146 | 134 | 120 | 106 | 101 |
| 6SDP 25/24 4SM | 5.5 | 7.5 | | 263 | 240 | 235 | 228 | 220 | 211 | 201 | 185 | 178 | 164 | 150 | 135 | 119 | 112 |
| 6SDP 25/24 6SM | 5.5 | 7.5 | | 263 | 240 | 235 | 228 | 220 | 211 | 201 | 185 | 178 | 164 | 150 | 135 | 119 | 112 |
| 6SDP 25/28 6SM | 7.5 | 10 | | 310 | 293 | 288 | 280 | 271 | 260 | 247 | 228 | 219 | 204 | 187 | 169 | 149 | 139 |
| 6SDP 25/32 6SM | 7.5 | 10 | | 353 | 333 | 328 | 319 | 308 | 295 | 281 | 258 | 248 | 230 | 212 | 191 | 167 | 156 |
| 6SDP 25/36 6SM | 9,2 | 12,5 | | 393 | 369 | 363 | 354 | 342 | 328 | 312 | 286 | 274 | 253 | 231 | 207 | 180 | 169 |
| 6SDP 25/40 6SM | 9,2 | 12,5 | | 435 | 407 | 400 | 389 | 376 | 360 | 343 | 314 | 301 | 278 | 253 | 226 | 196 | 183 |
| 6SDP 25/44 6SM | 11 | 15 | | 485 | 457 | 449 | 437 | 422 | 404 | 384 | 353 | 339 | 314 | 287 | 258 | 225 | 211 |
| 6SDP 25/50 6SM | 11 | 15 | | 549 | 513 | 505 | 492 | 475 | 455 | 432 | 395 | 379 | 349 | 319 | 286 | 249 | 233 |
| 6SDP 25/56 6SM | 13 | 17,5 | | 610 | 564 | 552 | 535 | 515 | 493 | 467 | 428 | 410 | 379 | 346 | 310 | 269 | 251 |
| 6SDP 25/63 6SM | 15 | 20 | | 685 | 642 | 627 | 605 | 581 | 555 | 527 | 485 | 466 | 432 | 393 | 351 | 302 | 280 |

**P2:** Rated motor power output.
**H:** Total head in m

# SDP

calpeda

## Coverage chart n ≈ 2900 rpm

### Three-phase

| Model | P2 | | Q = Flow | | | | | | | | | | | | |
|---|---|---|---|---|---|---|---|---|---|---|---|---|---|---|---|
| | | | m³/h | 0 | 6,2 | 7 | 7,5 | 8 | 8,5 | 9 | 10 | 11 | 12 | 13 | 13,6 |
| | | | l/min | | 103 | 117 | 125 | 133 | 142 | 150 | 167 | 183 | 200 | 217 | 227 |
| | kW | HP | H (m) = Total head | | | | | | | | | | | | |
| 6SDP 30/5 4SM | 1.5 | 2 | | 51,9 | 47,6 | 46,3 | 45,2 | 44 | 42,7 | 41,3 | 38 | 34,4 | 30,4 | 26,2 | 23,4 |
| 6SDP 30/8 4SM | 2,2 | 3 | | 81,9 | 74,2 | 72 | 70,3 | 68,4 | 66,2 | 63,8 | 58,4 | 52,4 | 45,9 | 38,9 | 34,4 |
| 6SDP 30/10 4SM | 3 | 4 | | 104 | 92,8 | 90 | 87,9 | 85,5 | 82,9 | 79,9 | 73,4 | 66,1 | 58,2 | 49,8 | 44,3 |
| 6SDP 30/13 4SM | 4 | 5,5 | | 133 | 122 | 118 | 116 | 112 | 109 | 105 | 96,4 | 87,1 | 77,1 | 66,3 | 59,1 |
| 6SDP 30/13 6SM | 4 | 5,5 | | 137 | 128 | 124 | 122 | 119 | 115 | 112 | 103 | 93,6 | 83,4 | 72,4 | 65,2 |
| 6SDP 30/16 4SM | 5.5 | 7.5 | | 165 | 151 | 147 | 144 | 140 | 136 | 132 | 122 | 110 | 97,5 | 83,9 | 74,8 |
| 6SDP 30/16 6SM | 5.5 | 7.5 | | 169 | 156 | 152 | 149 | 145 | 141 | 137 | 126 | 115 | 102 | 88,4 | 79,8 |
| 6SDP 30/18 4SM | 5.5 | 7.5 | | 185 | 168 | 163 | 159 | 155 | 150 | 145 | 134 | 121 | 107 | 91,6 | 81,4 |
| 6SDP 30/18 6SM | 5.5 | 7.5 | | 189 | 175 | 170 | 167 | 163 | 158 | 153 | 141 | 128 | 114 | 98,1 | 88,2 |
| 6SDP 30/21 4SM | 7.5 | 10 | | 222 | 207 | 202 | 198 | 193 | 188 | 182 | 168 | 153 | 137 | 119 | 108 |
| 6SDP 30/21 6SM | 7.5 | 10 | | 222 | 207 | 202 | 198 | 193 | 188 | 182 | 168 | 153 | 137 | 119 | 108 |
| 6SDP 30/24 4SM | 7.5 | 10 | | 253 | 230 | 224 | 219 | 214 | 208 | 201 | 186 | 169 | 150 | 129 | 116 |
| 6SDP 30/24 6SM | 7.5 | 10 | | 253 | 230 | 224 | 219 | 214 | 208 | 201 | 186 | 169 | 150 | 129 | 116 |
| 6SDP 30/28 6SM | 9,2 | 12,5 | | 295 | 274 | 267 | 261 | 255 | 247 | 239 | 221 | 201 | 179 | 156 | 140 |
| 6SDP 30/31 6SM | 9,2 | 12,5 | | 326 | 301 | 293 | 286 | 279 | 271 | 262 | 243 | 221 | 197 | 172 | 155 |
| 6SDP 30/36 6SM | 11 | 15 | | 378 | 349 | 340 | 333 | 324 | 315 | 305 | 282 | 255 | 227 | 197 | 177 |
| 6SDP 30/42 6SM | 13 | 17,5 | | 441 | 409 | 398 | 390 | 380 | 369 | 358 | 331 | 301 | 268 | 232 | 208 |
| 6SDP 30/47 6SM | 15 | 20 | | 489 | 452 | 440 | 431 | 420 | 408 | 394 | 364 | 330 | 292 | 253 | 227 |
| 6SDP 30/52 6SM | 18.5 | 25 | | 542 | 502 | 489 | 479 | 467 | 454 | 439 | 406 | 369 | 328 | 284 | 256 |
| 6SDP 30/56 6SM | 18.5 | 25 | | 581 | 535 | 520 | 509 | 496 | 482 | 466 | 429 | 388 | 344 | 297 | 266 |
| 6SDP 30/60 6SM | 18.5 | 25 | | 622 | 568 | 552 | 540 | 527 | 511 | 494 | 456 | 412 | 364 | 312 | 279 |
| 6SDP 30/65 6SM | 22 | 30 | | 677 | 620 | 604 | 591 | 577 | 561 | 543 | 503 | 456 | 404 | 346 | 309 |

| Model | P2 | | Q = Flow | | | | | | | | | | | | |
|---|---|---|---|---|---|---|---|---|---|---|---|---|---|---|---|
| | | | m³/h | 0 | 9 | 9,5 | 10 | 11 | 12 | 13 | 14 | 15 | 16 | 17 | 18 | 19,2 |
| | | | l/min | | 150 | 158 | 167 | 183 | 200 | 217 | 233 | 250 | 267 | 283 | 300 | 320 |
| | kW | HP | H (m) = Total head | | | | | | | | | | | | |
| 6SDP 35/3 4SM | 1,1 | 1,5 | | 30,4 | 27,4 | 27 | 26,6 | 25,6 | 24,5 | 23,1 | 21,6 | 19,9 | 18 | 16 | 13,9 | 11,1 |
| 6SDP 35/4 4SM | 1.5 | 2 | | 40,5 | 37,2 | 36,8 | 36,2 | 34,9 | 33,3 | 31,4 | 29,3 | 27 | 24,5 | 21,9 | 19,2 | 15,7 |
| 6SDP 35/6 4SM | 2,2 | 3 | | 60,5 | 55,1 | 54,4 | 53,5 | 51,5 | 49,1 | 46,3 | 43,2 | 39,7 | 36 | 32,1 | 28 | 22,6 |
| 6SDP 35/7 4SM | 3 | 4 | | 71,9 | 66,2 | 65,5 | 64,7 | 62,6 | 60 | 57 | 53,4 | 49,5 | 45,1 | 40,5 | 35,6 | 29,3 |
| 6SDP 35/9 4SM | 4 | 5,5 | | 93,1 | 79,3 | 78 | 76,6 | 73,5 | 69,9 | 65,9 | 61,5 | 56,8 | 51,8 | 46,6 | 41 | 33,9 |
| 6SDP 35/9 6SM | 4 | 5,5 | | 93,9 | 87,7 | 86,8 | 85,8 | 83,2 | 80 | 76,2 | 71,8 | 66,7 | 61,2 | 55,3 | 49 | 40,9 |
| 6SDP 35/11 4SM | 5.5 | 7.5 | | 112 | 105 | 104 | 102 | 98,8 | 94,8 | 90 | 84,5 | 78,4 | 71,8 | 64,7 | 57,2 | 47,4 |
| 6SDP 35/11 6SM | 5.5 | 7.5 | | 115 | 108 | 107 | 105 | 102 | 97,6 | 92,7 | 87,3 | 81,3 | 75 | 68,4 | 61,7 | 53,3 |
| 6SDP 35/13 4SM | 5.5 | 7.5 | | 138 | 123 | 122 | 120 | 115 | 110 | 104 | 96,5 | 88,7 | 80,2 | 71,1 | 61,4 | 49 |
| 6SDP 35/13 6SM | 5.5 | 7.5 | | 135 | 125 | 124 | 122 | 119 | 114 | 108 | 102 | 94,1 | 86,1 | 77,5 | 68,3 | 56,5 |
| 6SDP 35/15 4SM | 7.5 | 10 | | 157 | 148 | 146 | 144 | 140 | 135 | 128 | 121 | 113 | 103 | 93,1 | 82,6 | 69,2 |
| 6SDP 35/15 6SM | 7.5 | 10 | | 157 | 148 | 146 | 144 | 140 | 135 | 128 | 121 | 113 | 103 | 93,1 | 82,6 | 69,2 |
| 6SDP 35/18 4SM | 7.5 | 10 | | 185 | 175 | 173 | 171 | 165 | 159 | 151 | 142 | 132 | 121 | 109 | 96,3 | 80,3 |
| 6SDP 35/18 6SM | 7.5 | 10 | | 185 | 175 | 173 | 171 | 165 | 159 | 151 | 142 | 132 | 121 | 109 | 96,3 | 80,3 |
| 6SDP 35/22 6SM | 9,2 | 12,5 | | 226 | 211 | 208 | 206 | 199 | 191 | 181 | 170 | 158 | 145 | 131 | 115 | 95,3 |
| 6SDP 35/26 6SM | 11 | 15 | | 270 | 252 | 250 | 246 | 238 | 229 | 217 | 204 | 190 | 174 | 157 | 139 | 115 |
| 6SDP 35/31 6SM | 13 | 17,5 | | 320 | 300 | 297 | 293 | 284 | 273 | 259 | 244 | 226 | 208 | 188 | 166 | 139 |
| 6SDP 35/35 6SM | 15 | 20 | | 360 | 336 | 332 | 328 | 318 | 305 | 289 | 272 | 252 | 231 | 208 | 184 | 153 |
| 6SDP 35/40 6SM | 18.5 | 25 | | 412 | 385 | 381 | 376 | 364 | 349 | 332 | 312 | 290 | 265 | 239 | 212 | 176 |
| 6SDP 35/44 6SM | 18.5 | 25 | | 451 | 420 | 415 | 410 | 397 | 381 | 361 | 339 | 315 | 288 | 259 | 228 | 189 |
| 6SDP 35/48 6SM | 22 | 30 | | 498 | 463 | 458 | 452 | 437 | 420 | 398 | 374 | 347 | 318 | 286 | 253 | 210 |
| 6SDP 35/52 6SM | 22 | 30 | | 535 | 497 | 491 | 485 | 469 | 450 | 427 | 401 | 372 | 340 | 306 | 270 | 223 |
| 6SDP 35/56 6SM | 22 | 30 | | 570 | 525 | 519 | 512 | 495 | 474 | 449 | 421 | 390 | 356 | 321 | 283 | 233 |
| 6SDP 35/60 6SM | 26 | 35 | | 613 | 569 | 562 | 555 | 537 | 515 | 488 | 458 | 424 | 387 | 348 | 306 | 253 |
| 6SDP 35/65 6SM | 26 | 35 | | 662 | 612 | 605 | 596 | 576 | 552 | 523 | 489 | 453 | 414 | 372 | 328 | 270 |

**P2:** Rated motor power output.
**H:** Total head in m

# SDP

calpeda®

## Coverage chart n ≈ 2900 rpm

### Three-phase

| Model | P2 | | Q = Flow | | | | | | | | | | | | | | |
|---|---|---|---|---|---|---|---|---|---|---|---|---|---|---|---|---|---|
| | | | m³/h | 0 | 11,9 | 13 | 14 | 15 | 16 | 17 | 18 | 19 | 20 | 21 | 22 | 23 | 24 |
| | | | l/min | | 198 | 217 | 233 | 250 | 267 | 283 | 300 | 317 | 333 | 350 | 367 | 383 | 400 |
| | kW | HP | H (m) = Total head | | | | | | | | | | | | | | |
| 6SDP 40/3 4SM | 1.5 | 2 | | 31,7 | 27 | 26,4 | 25,7 | 24,9 | 24 | 22,9 | 21,6 | 20,1 | 18,5 | 16,6 | 14,7 | 12,6 | 10,5 |
| 6SDP 40/4 4SM | 2,2 | 3 | | 42,4 | 36,1 | 35,2 | 34,2 | 33,1 | 31,8 | 30,3 | 28,5 | 26,6 | 24,5 | 22,1 | 19,5 | 16,8 | 14,1 |
| 6SDP 40/6 4SM | 3 | 4 | | 63,6 | 55,8 | 54,4 | 52,9 | 51,1 | 49,1 | 46,8 | 44,1 | 41,3 | 38,2 | 35 | 31,5 | 28 | 24,3 |
| 6SDP 40/8 4SM | 4 | 5,5 | | 86,1 | 71,9 | 70,1 | 68,1 | 65,9 | 63,3 | 60,3 | 56,9 | 53 | 48,7 | 43,9 | 38,7 | 33,4 | 28 |
| 6SDP 40/8 6SM | 4 | 5,5 | | 86,5 | 76,7 | 74,8 | 72,7 | 70,1 | 67,1 | 63,7 | 60 | 56,1 | 51,9 | 47,7 | 43,4 | 39 | 34,6 |
| 6SDP 40/10 4SM | 5.5 | 7.5 | | 106 | 92,9 | 90,6 | 88,2 | 85,3 | 82,1 | 78,5 | 74,4 | 70 | 65,1 | 59,9 | 54,4 | 48,5 | 42,3 |
| 6SDP 40/10 6SM | 5.5 | 7.5 | | 108 | 95,8 | 93,8 | 91,5 | 88,7 | 85,4 | 81,7 | 77,4 | 72,8 | 67,7 | 62,3 | 56,6 | 50,6 | 44,4 |
| 6SDP 40/13 4SM | 7.5 | 10 | | 138 | 121 | 118 | 115 | 111 | 107 | 103 | 96,9 | 91 | 84,5 | 77,3 | 69,7 | 61,7 | 53,3 |
| 6SDP 40/13 6SM | 7.5 | 10 | | 142 | 127 | 124 | 121 | 117 | 113 | 108 | 103 | 96,2 | 89,7 | 82,7 | 75,4 | 67,7 | 59,6 |
| 6SDP 40/16 6SM | 9,2 | 12,5 | | 174 | 155 | 152 | 148 | 144 | 139 | 133 | 126 | 119 | 111 | 102 | 92,1 | 82,4 | 72,3 |
| 6SDP 40/20 6SM | 11 | 15 | | 216 | 193 | 189 | 184 | 179 | 172 | 165 | 156 | 147 | 136 | 125 | 114 | 102 | 88,8 |
| 6SDP 40/23 6SM | 13 | 17,5 | | 249 | 223 | 218 | 213 | 206 | 199 | 190 | 180 | 169 | 158 | 145 | 132 | 118 | 103 |
| 6SDP 40/26 6SM | 15 | 20 | | 281 | 251 | 246 | 240 | 232 | 224 | 215 | 204 | 192 | 178 | 164 | 149 | 133 | 117 |
| 6SDP 40/30 6SM | 18.5 | 25 | | 324 | 289 | 283 | 276 | 268 | 258 | 247 | 234 | 220 | 205 | 188 | 171 | 153 | 134 |
| 6SDP 40/33 6SM | 18.5 | 25 | | 355 | 316 | 309 | 301 | 292 | 281 | 269 | 255 | 240 | 224 | 206 | 187 | 166 | 143 |
| 6SDP 40/38 6SM | 22 | 30 | | 409 | 364 | 356 | 347 | 336 | 324 | 309 | 293 | 275 | 256 | 235 | 213 | 190 | 166 |
| 6SDP 40/42 6SM | 22 | 30 | | 449 | 397 | 389 | 379 | 367 | 352 | 336 | 318 | 298 | 276 | 253 | 229 | 204 | 177 |
| 6SDP 40/44 6SM | 26 | 35 | | 477 | 427 | 417 | 407 | 395 | 381 | 364 | 346 | 325 | 303 | 278 | 253 | 226 | 198 |
| 6SDP 40/48 6SM | 26 | 35 | | 517 | 460 | 450 | 440 | 426 | 411 | 393 | 372 | 350 | 325 | 298 | 270 | 240 | 210 |
| 6SDP 40/51 6SM | 30 | 40 | | 548 | 485 | 476 | 465 | 452 | 437 | 418 | 398 | 374 | 348 | 320 | 290 | 258 | 226 |
| 6SDP 40/55 6SM | 30 | 40 | | 588 | 523 | 511 | 499 | 484 | 466 | 445 | 422 | 397 | 369 | 339 | 307 | 274 | 240 |
| 6SDP 40/60 6SM | 37 | 50 | | 642 | 563 | 551 | 539 | 524 | 506 | 485 | 461 | 434 | 405 | 372 | 337 | 300 | 261 |

| Model | P2 | | Q = Flow | | | | | | | | | | | | | | |
|---|---|---|---|---|---|---|---|---|---|---|---|---|---|---|---|---|---|
| | | | m³/h | 0 | 21 | 22 | 23 | 24 | 25 | 26 | 27 | 28 | 29 | 30 | 32 | 33 |
| | | | l/min | | 350 | 367 | 383 | 400 | 417 | 433 | 450 | 467 | 483 | 500 | 533 | 550 |
| | kW | HP | H (m) = Total head | | | | | | | | | | | | | | |
| 6SDP 50/3 4SM | 2,2 | 3 | | 29 | 23,2 | 22,7 | 22,1 | 21,3 | 20,5 | 19,5 | 18,5 | 17,3 | 16,1 | 14,8 | 12,2 | 11 |
| 6SDP 50/4 4SM | 3 | 4 | | 39,1 | 30,9 | 30,2 | 29,4 | 28,4 | 27,2 | 25,9 | 24,5 | 22,8 | 21,1 | 19,2 | 15,3 | 13,4 |
| 6SDP 50/5 4SM | 4 | 5,5 | | 49,6 | 37,9 | 37,1 | 36,2 | 35,3 | 34,2 | 33 | 31,6 | 30,1 | 28,4 | 26,6 | 22,5 | 20,3 |
| 6SDP 50/5 6SM | 4 | 5,5 | | 50,5 | 41,2 | 40,2 | 39,2 | 38 | 36,7 | 35,3 | 33,7 | 32,1 | 30,3 | 28,4 | 24,3 | 22,2 |
| 6SDP 50/7 4SM | 5.5 | 7.5 | | 70,9 | 56,7 | 55,9 | 54,9 | 53,6 | 52,1 | 50,2 | 48,1 | 45,6 | 42,9 | 40 | 34,2 | 31,7 |
| 6SDP 50/7 6SM | 5.5 | 7.5 | | 70,5 | 58,2 | 57,3 | 56,3 | 55,1 | 53,6 | 51,8 | 49,8 | 47,4 | 44,8 | 41,9 | 35,7 | 32,6 |
| 6SDP 50/10 4SM | 7.5 | 10 | | 99,2 | 79,3 | 77,7 | 75,8 | 73,7 | 71,2 | 68,4 | 65,2 | 61,7 | 57,8 | 53,6 | 44,6 | 39,9 |
| 6SDP 50/10 6SM | 7.5 | 10 | | 101 | 83,5 | 82,3 | 80,8 | 79 | 76,9 | 74,3 | 71,4 | 68 | 64,2 | 60 | 51,2 | 46,9 |
| 6SDP 50/12 6SM | 9,2 | 12,5 | | 121 | 101 | 98,5 | 96,7 | 94,5 | 91,8 | 88,7 | 85,2 | 81,1 | 76,6 | 71,7 | 61,2 | 56 |
| 6SDP 50/15 6SM | 11 | 15 | | 150 | 125 | 123 | 120 | 118 | 114 | 110 | 106 | 101 | 94,6 | 88,4 | 75,3 | 68,8 |
| 6SDP 50/17 6SM | 13 | 17,5 | | 170 | 142 | 140 | 137 | 134 | 130 | 126 | 121 | 115 | 108 | 102 | 86,2 | 78,9 |
| 6SDP 50/20 6SM | 15 | 20 | | 200 | 166 | 163 | 160 | 157 | 152 | 147 | 141 | 134 | 126 | 118 | 101 | 91,6 |
| 6SDP 50/25 6SM | 18.5 | 25 | | 251 | 207 | 203 | 200 | 195 | 189 | 183 | 176 | 167 | 158 | 147 | 126 | 115 |
| 6SDP 50/30 6SM | 22 | 30 | | 300 | 245 | 241 | 236 | 231 | 224 | 216 | 206 | 196 | 185 | 172 | 146 | 134 |
| 6SDP 50/35 6SM | 26 | 35 | | 350 | 289 | 285 | 279 | 273 | 265 | 256 | 245 | 233 | 220 | 205 | 175 | 160 |
| 6SDP 50/40 6SM | 30 | 40 | | 400 | 333 | 327 | 321 | 314 | 305 | 294 | 282 | 269 | 253 | 237 | 202 | 184 |
| 6SDP 50/45 6SM | 37 | 50 | | 449 | 370 | 364 | 357 | 348 | 337 | 325 | 312 | 296 | 280 | 261 | 222 | 202 |
| 6SDP 50/48 6SM | 37 | 50 | | 476 | 390 | 383 | 375 | 366 | 354 | 341 | 326 | 309 | 291 | 271 | 229 | 209 |

**P2:** Rated motor power output.
**H:** Total head in m

# SDP

## Coverage chart n ≈ 2900 rpm

### Three-phase

| | | | Q = Flow | | | | | | | | | | | | | | | | | |
|---|---|---|---|---|---|---|---|---|---|---|---|---|---|---|---|---|---|---|---|---|
| | | | m³/h | 0 | 14,4 | 15 | 16 | 17 | 18 | 20 | 22 | 24 | 26 | 28 | 30 | 32 | 34 | 36 | 38 | 40,2 |
| Model | P2 | | l/min | | 240 | 250 | 267 | 283 | 300 | 333 | 367 | 400 | 433 | 467 | 500 | 533 | 567 | 600 | 633 | 670 |
| | kW | HP | H (m) = Total head | | | | | | | | | | | | | | | | | |
| 6SDP 52/2AB 4SM | 2,2 | 3 | | 25,6 | 22,5 | 22,3 | 22,1 | 21,8 | 21,6 | 21 | 20,4 | 19,7 | 18,9 | 17,9 | 16,9 | 15,7 | 14,4 | 13,1 | 11,6 | - |
| 6SDP 52/3B 4SM | 3 | 4 | | 34 | 29,8 | 29,6 | 29,2 | 28,8 | 28,3 | 27,4 | 26,4 | 25,3 | 24,1 | 22,7 | 21,2 | 19,5 | 17,5 | 15,4 | 13 | - |
| 6SDP 52/3A 4SM | 4 | 5,5 | | 43,8 | 39 | 38,8 | 38,5 | 38,2 | 37,9 | 37,2 | 36,4 | 35,4 | 34,3 | 32,9 | 31,4 | 29,7 | 27,8 | 25,9 | 23,7 | 21,3 |
| 6SDP 52/3A 6SM | 4 | 5,5 | | 43,8 | 39 | 38,8 | 38,5 | 38,2 | 37,9 | 37,2 | 36,4 | 35,4 | 34,2 | 32,9 | 31,4 | 29,7 | 27,8 | 25,9 | 23,7 | 21,3 |
| 6SDP 52/4A 4SM | 5.5 | 7.5 | | 56,6 | 50,3 | 50,1 | 49,6 | 49 | 48,5 | 47,3 | 46 | 44,4 | 42,6 | 40,5 | 38,2 | 35,7 | 32,9 | 29,8 | 26,6 | 22,9 |
| 6SDP 52/4A 6SM | 5.5 | 7.5 | | 58,2 | 51,5 | 51,3 | 50,9 | 50,5 | 50,1 | 49,2 | 48,1 | 46,7 | 45,2 | 43,4 | 41,4 | 39,1 | 36,6 | 34 | 31,2 | 27,9 |
| 6SDP 52/6K 4SM | 7.5 | 10 | | 81,3 | 72,2 | 71,9 | 71,3 | 70,7 | 70 | 68,6 | 66,9 | 64,9 | 62,6 | 60 | 56,9 | 53,5 | 49,8 | 45,7 | 41,3 | - |
| 6SDP 52/6K 6SM | 7.5 | 10 | | 81,3 | 72,2 | 71,9 | 71,3 | 70,7 | 70 | 68,6 | 66,9 | 64,9 | 62,6 | 60 | 56,9 | 53,5 | 49,8 | 45,7 | 41,3 | - |
| 6SDP 52/7A 6SM | 9,2 | 12,5 | | 102 | 90 | 89,6 | 89 | 88,3 | 87,5 | 85,9 | 83,9 | 81,6 | 78,9 | 75,8 | 72,2 | 68,2 | 63,9 | 59,2 | 54,3 | 48,6 |
| 6SDP 52/9K 6SM | 11 | 15 | | 125 | 110 | 110 | 109 | 108 | 107 | 105 | 102 | 98,4 | 94,8 | 90,7 | 86,1 | 80,9 | 75,3 | 69,2 | 62,7 | - |
| 6SDP 52/10I 6SM | 13 | 17,5 | | 143 | 127 | 127 | 126 | 125 | 124 | 121 | 119 | 115 | 112 | 107 | 102 | 95,9 | 89,7 | 83 | 75,9 | - |
| 6SDP 52/12K 6SM | 15 | 20 | | 168 | 149 | 148 | 147 | 146 | 145 | 142 | 138 | 134 | 129 | 124 | 118 | 111 | 103 | 94,9 | 86,3 | - |
| 6SDP 52/14A 6SM | 18.5 | 25 | | 203 | 180 | 179 | 178 | 176 | 175 | 172 | 168 | 163 | 158 | 151 | 144 | 136 | 128 | 118 | 108 | 96,4 |
| 6SDP B52/17A 6SM | 22 | 30 | | 246 | 217 | 216 | 214 | 212 | 210 | 206 | 201 | 196 | 189 | 181 | 172 | 162 | 151 | 140 | 128 | 114 |
| 6SDP B52/19A 6SM | 26 | 35 | | 277 | 247 | 246 | 244 | 243 | 241 | 238 | 233 | 228 | 221 | 213 | 204 | 193 | 182 | 169 | 156 | 141 |
| 6SDP B52/22A 6SM | 30 | 40 | | 321 | 285 | 284 | 282 | 280 | 278 | 273 | 267 | 259 | 251 | 241 | 230 | 217 | 204 | 189 | 174 | 156 |
| 6SDP B52/25A 6SM | 37 | 50 | | 362 | 320 | 319 | 316 | 314 | 311 | 305 | 298 | 290 | 280 | 269 | 256 | 241 | 226 | 209 | 191 | 171 |
| 6SDP B52/28A 6SM | 37 | 50 | | 404 | 356 | 354 | 351 | 348 | 345 | 338 | 330 | 320 | 309 | 296 | 281 | 265 | 247 | 229 | 209 | 186 |

**P2:** Rated motor power output.
**H:** Total head in m

# SDP

## Characteristic curves n ≈ 2900 rpm

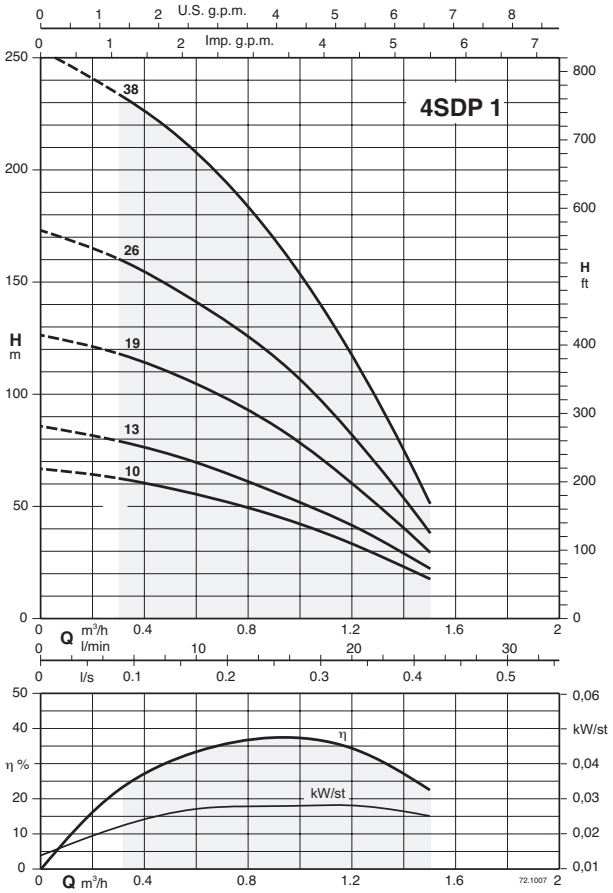


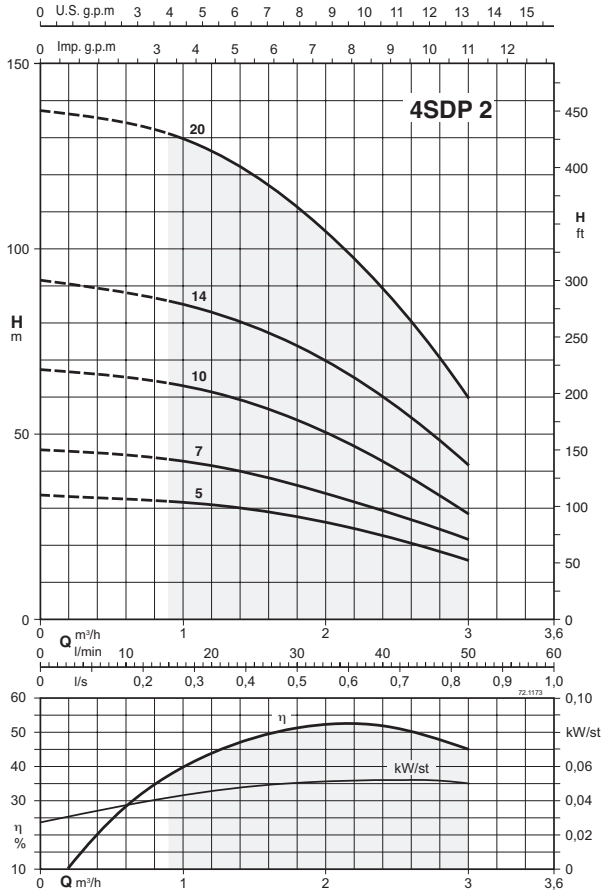


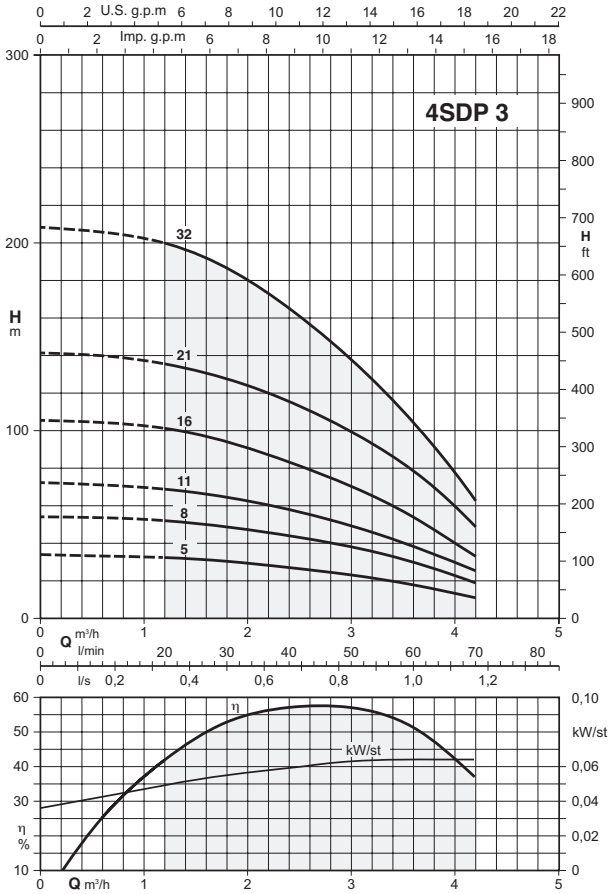


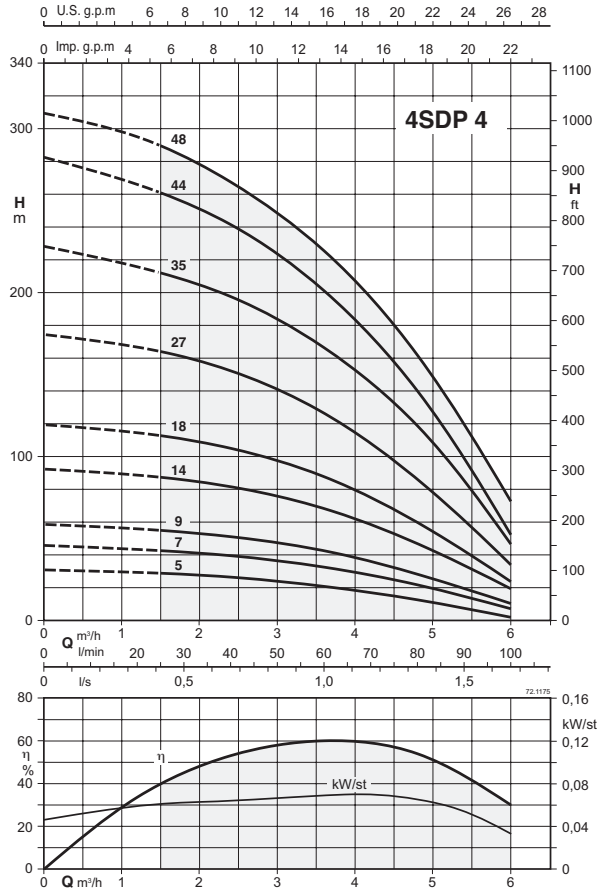

# SDP

## Characteristic curves n ≈ 2900 rpm

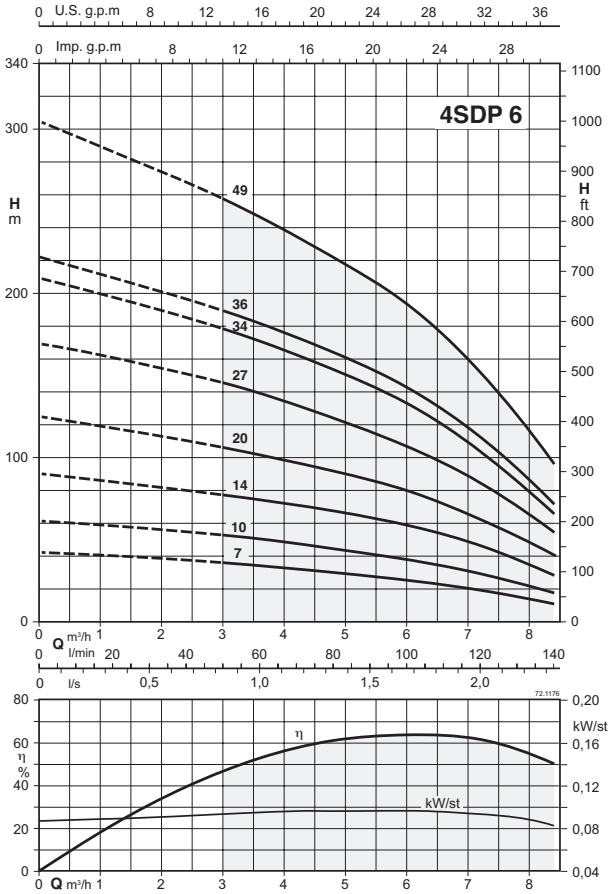


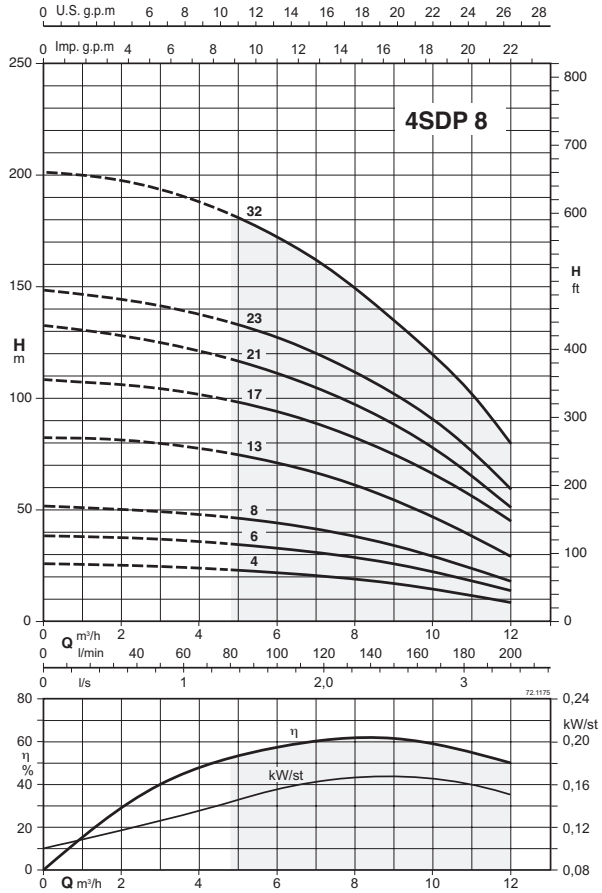


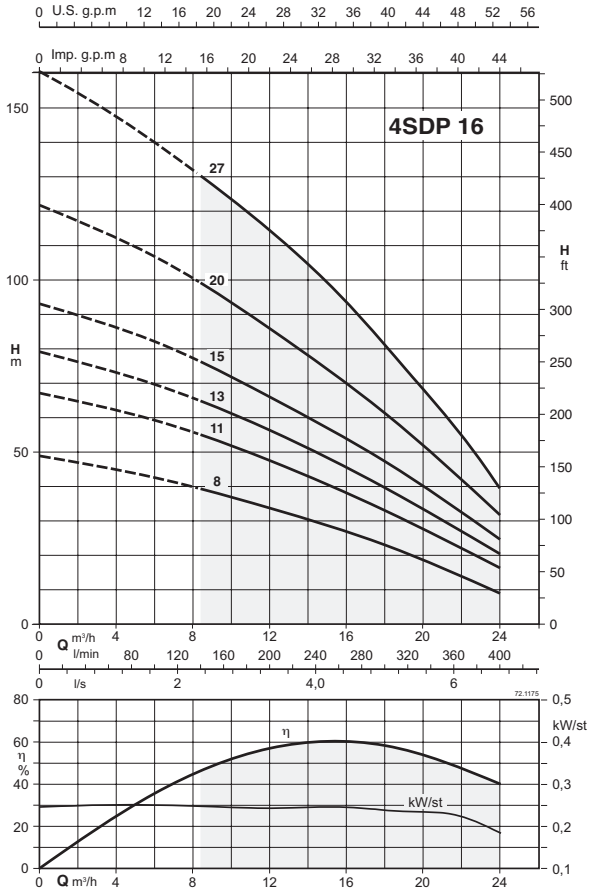


**4SDP(M) 8,16** Pumps for specific applications with high sand content

# SDP

## Characteristic curves n ≈ 2900 rpm

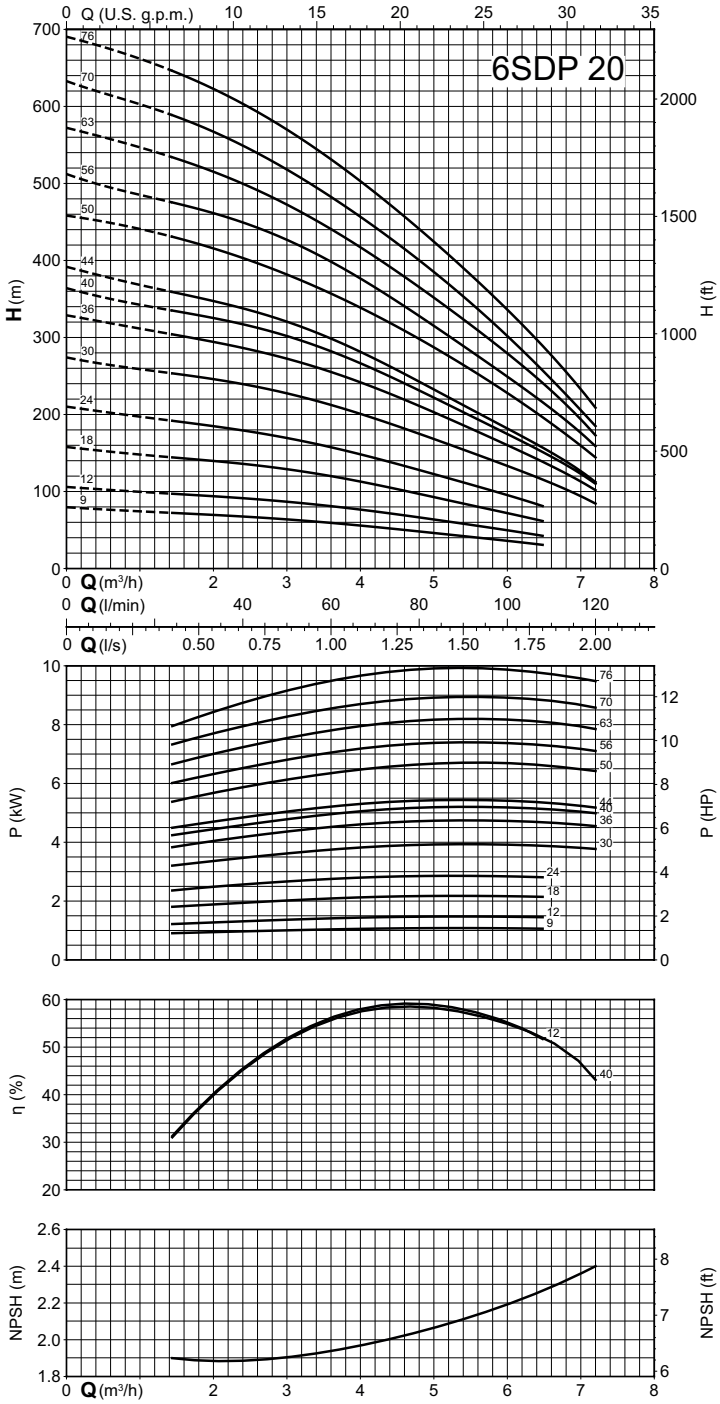


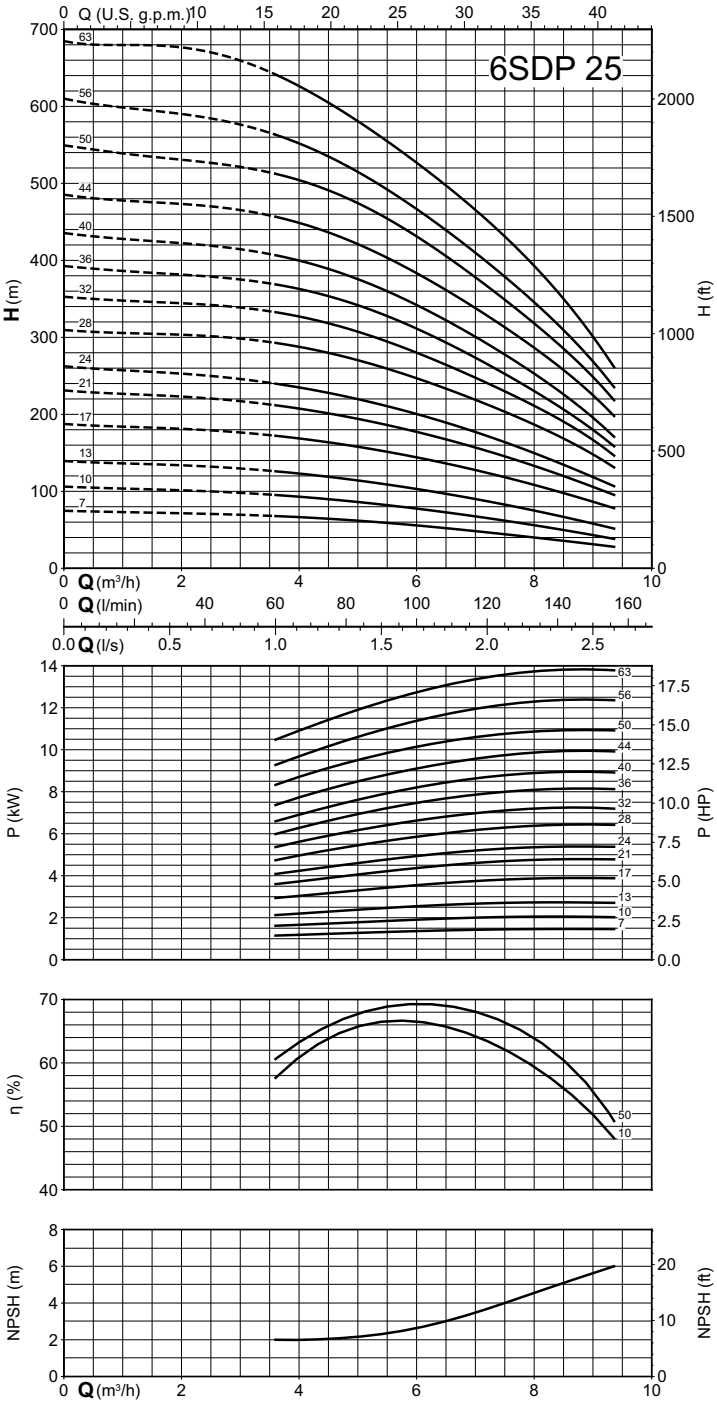

# SDP

## Characteristic curves n ≈ 2900 rpm

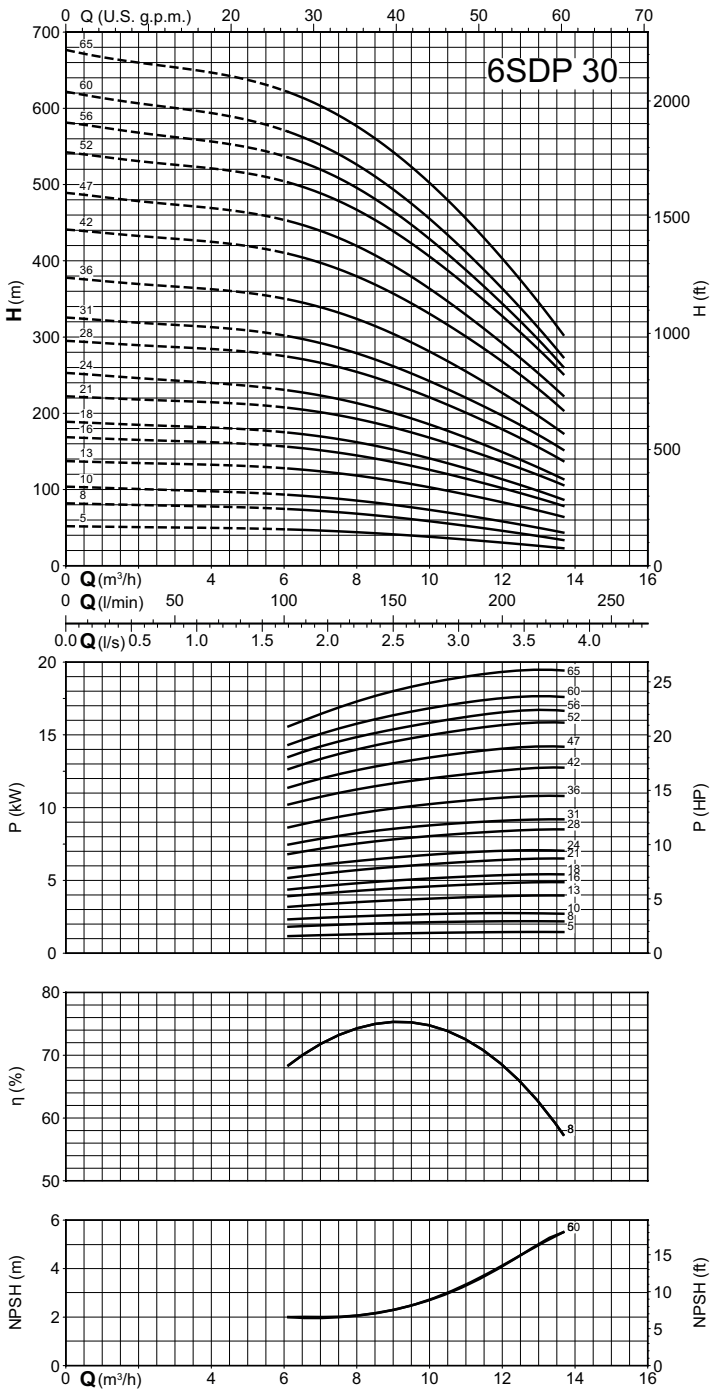


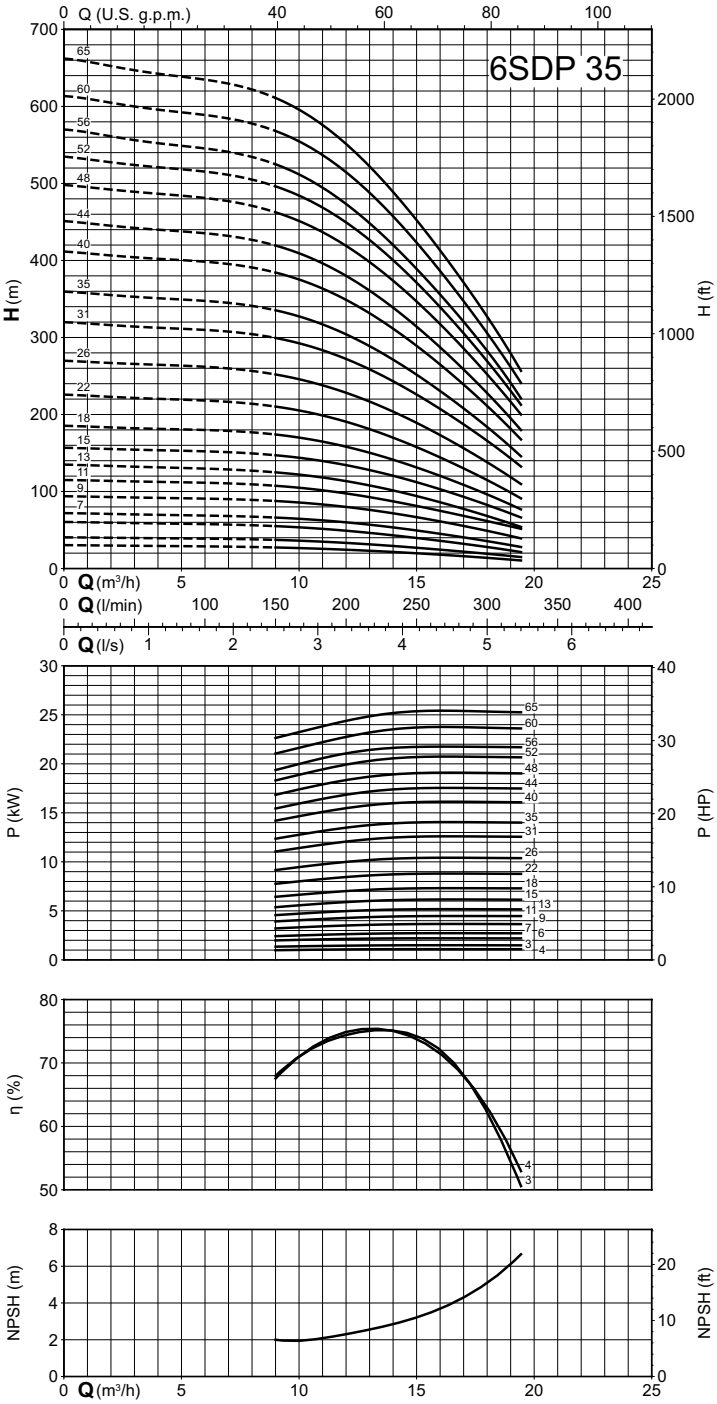

# SDP

## Characteristic curves n ≈ 2900 rpm

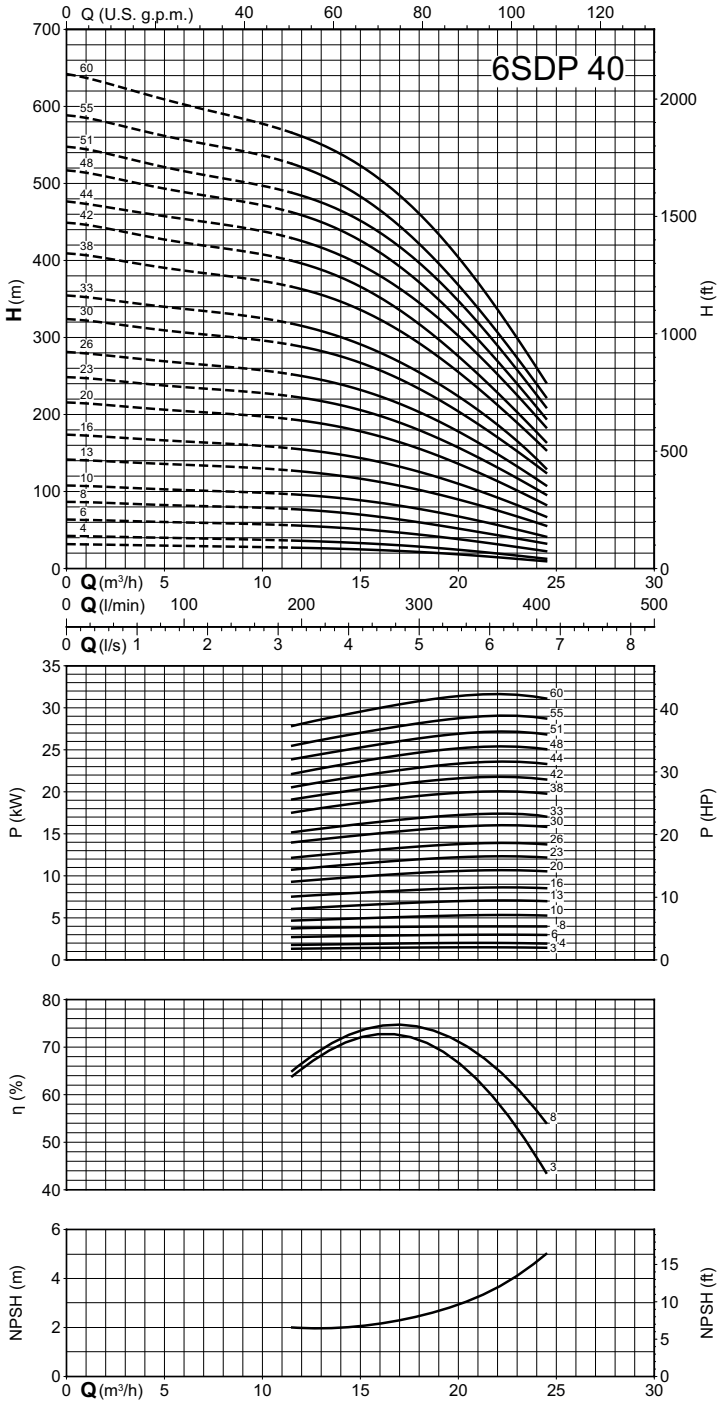


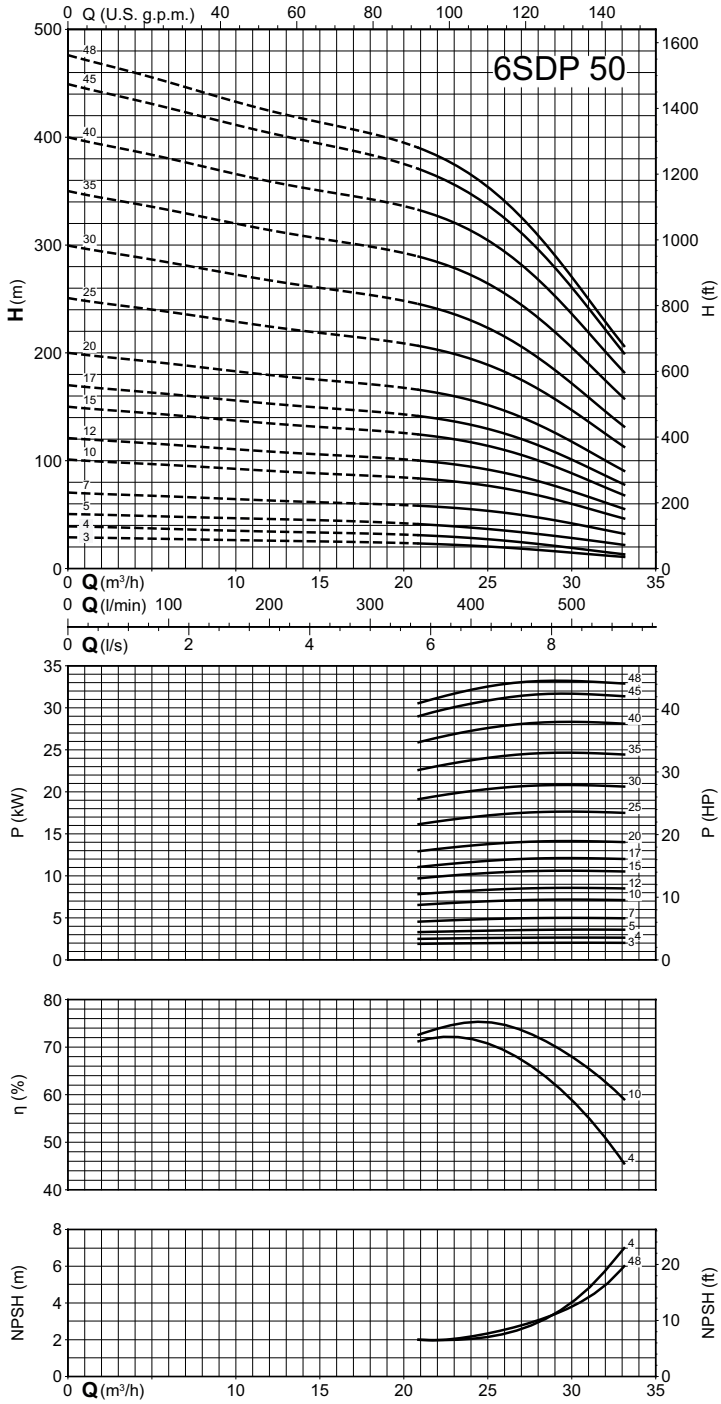

# SDP

## Characteristic curves n ≈ 2900 rpm

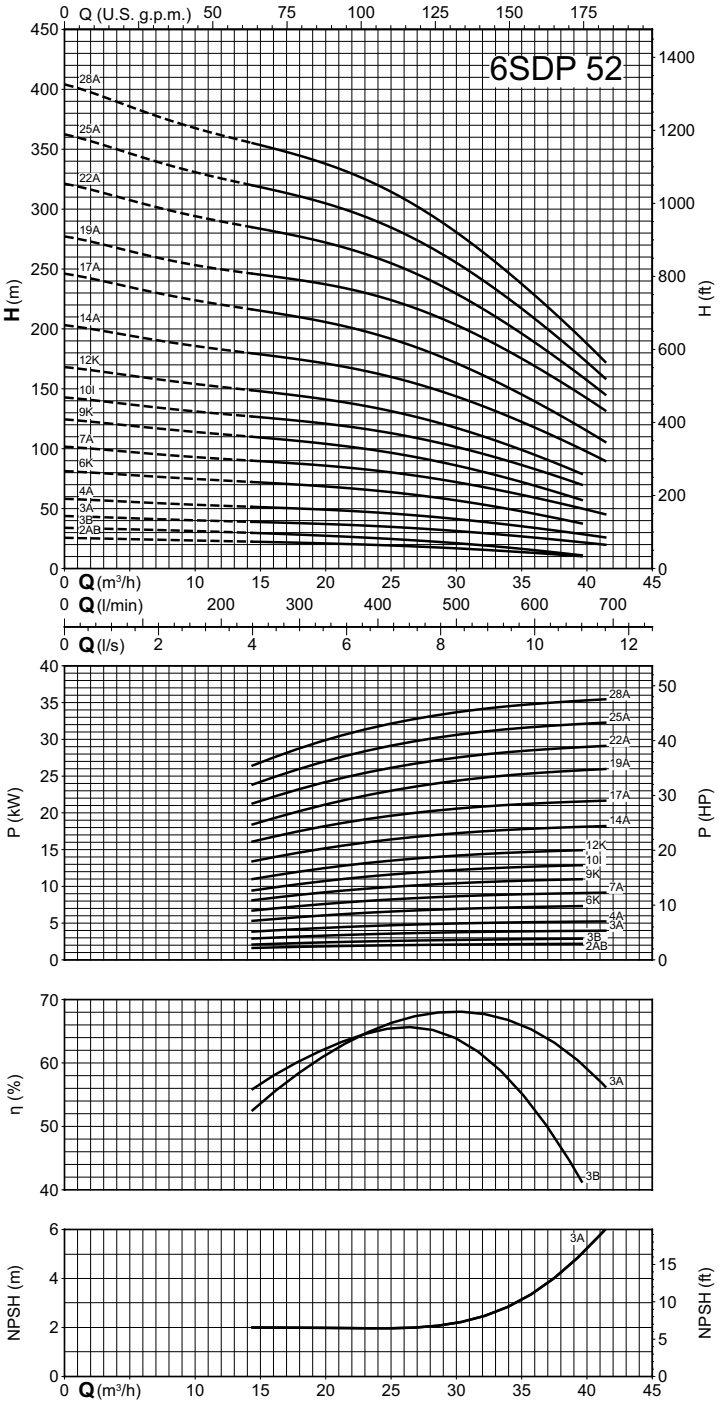

# SDP

## Dimensions and weights

| TYPE | | mm | | | | kg |
|---|---|---|---|---|---|---|
| | DN2 | f | fM | l4 | l5 | Weight |
| 4SDP 1/10C | Rp 1 1/4" | 324 | 651 | 4" | 98 | 10.6 |
| 4SDP 1/13C | Rp 1 1/4" | 377 | 704 | 4" | 98 | 11.1 |
| 4SDP 1/19C | Rp 1 1/4" | 481 | 808 | 4" | 98 | 13.1 |
| 4SDP 1/26C | Rp 1 1/4" | 642 | 989 | 4" | 98 | 14.7 |
| 4SDP 1/38C | Rp 1 1/4" | 864 | 1226 | 4" | 98 | 20.1 |

| TYPE | | mm | | | | kg |
|---|---|---|---|---|---|---|
| | DN2 | f | fM | l4 | l5 | Weight |
| 4SDPM 1/10C | Rp 1 1/4" | 324 | 651 | 4" | 98 | 10.5 |
| 4SDPM 1/13C | Rp 1 1/4" | 377 | 704 | 4" | 98 | 11.5 |
| 4SDPM 1/19C | Rp 1 1/4" | 481 | 843 | 4" | 98 | 11.2 |
| 4SDPM 1/26C | Rp 1 1/4" | 642 | 1004 | 4" | 98 | 15.2 |
| 4SDPM 1/38C | Rp 1 1/4" | 864 | 1266 | 4" | 98 | 20.4 |

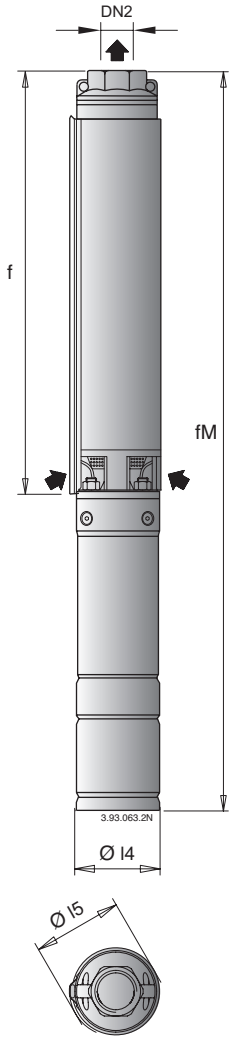


| TYPE | | mm | | | | kg |
|---|---|---|---|---|---|---|
| | DN2 | f | fM | l4 | l5 | Weight |
| 4SDP 2/5C | Rp 1 1/4" | 236 | 563 | 4" | 98 | 9.8 |
| 4SDP 2/7C | Rp 1 1/4" | 271 | 598 | 4" | 98 | 10.1 |
| 4SDP 2/10C | Rp 1 1/4" | 324 | 651 | 4" | 98 | 10.7 |
| 4SDP 2/14C | Rp 1 1/4" | 394 | 741 | 4" | 98 | 12.9 |
| 4SDP 2/20C | Rp 1 1/4" | 499 | 861 | 4" | 98 | 13.9 |
| 4SDP 2/28C | Rp 1 1/4" | 680 | 1082 | 4" | 98 | 17 |
| 4SDP 2/40C | Rp 1 1/4" | 885 | 1287 | 4" | 98 | 21 |

| TYPE | | mm | | | | kg |
|---|---|---|---|---|---|---|
| | DN2 | f | fM | l4 | l5 | Weight |
| 4SDPM 2/5C | Rp 1 1/4" | 236 | 563 | 4" | 98 | 9.3 |
| 4SDPM 2/7C | Rp 1 1/4" | 271 | 598 | 4" | 98 | 10 |
| 4SDPM 2/10C | Rp 1 1/4" | 324 | 686 | 4" | 98 | 12 |
| 4SDPM 2/14C | Rp 1 1/4" | 394 | 756 | 4" | 98 | 11.6 |
| 4SDPM 2/20C | Rp 1 1/4" | 499 | 901 | 4" | 98 | 16 |
| 4SDPM 2/28C | Rp 1 1/4" | 680 | 1127 | 4" | 98 | 19.8 |
| 4SDPM 2/40C | Rp 1 1/4" | 885 | 1402 | 4" | 98 | 25.1 |

| TYPE | | mm | | | | kg |
|---|---|---|---|---|---|---|
| | DN2 | f | fM | l4 | l5 | Weight |
| 4SDP 3/5C | Rp 1 1/4" | 236 | 563 | 4" | 98 | 9.7 |
| 4SDP 3/8C | Rp 1 1/4" | 289 | 616 | 4" | 98 | 11.2 |
| 4SDP 3/11C | Rp 1 1/4" | 342 | 689 | 4" | 98 | 11 |
| 4SDP 3/16C | Rp 1 1/4" | 430 | 792 | 4" | 98 | 12.5 |
| 4SDP 3/21C | Rp 1 1/4" | 519 | 921 | 4" | 98 | 17.9 |
| 4SDP 3/32C | Rp 1 1/4" | 787 | 1189 | 4" | 98 | 19.3 |

| TYPE | | mm | | | | kg |
|---|---|---|---|---|---|---|
| | DN2 | f | fM | l4 | l5 | Weight |
| 4SDPM 3/5C | Rp 1 1/4" | 236 | 563 | 4" | 98 | 9.6 |
| 4SDPM 3/8C | Rp 1 1/4" | 289 | 651 | 4" | 98 | 12 |
| 4SDPM 3/11C | Rp 1 1/4" | 342 | 704 | 4" | 98 | 12.3 |
| 4SDPM 3/16C | Rp 1 1/4" | 430 | 832 | 4" | 98 | 14.8 |
| 4SDPM 3/21C | Rp 1 1/4" | 519 | 966 | 4" | 98 | 18.3 |
| 4SDPM 3/32C | Rp 1 1/4" | 787 | 1304 | 4" | 98 | 23.5 |

| TYPE | | mm | | | | kg |
|---|---|---|---|---|---|---|
| | DN2 | f | fM | l4 | l5 | Weight |
| 4SDP 4/5C | Rp 1 1/4" | 257 | 584 | 4" | 98 | 9.8 |
| 4SDP 4/7C | Rp 1 1/4" | 301 | 628 | 4" | 98 | 11.2 |
| 4SDP 4/9C | Rp 1 1/4" | 344 | 691 | 4" | 98 | 11 |
| 4SDP 4/14C | Rp 1 1/4" | 452 | 814 | 4" | 98 | 13.1 |
| 4SDP 4/18C | Rp 1 1/4" | 538 | 940 | 4" | 98 | 15.6 |
| 4SDP 4/27C | Rp 1 1/4" | 805 | 1207 | 4" | 98 | 18.7 |
| 4SDP 4/35C | Rp 1 1/4" | 972 | 1453 | 4" | 98 | 23.5 |
| 4SDP 4/44C | Rp 1 1/4" | 1166 | 1712 | 4" | 98 | 28.5 |
| 4SDP 4/48C | Rp 1 1/4" | 1291 | 1837 | 4" | 98 | 29.6 |

| TYPE | | mm | | | | kg |
|---|---|---|---|---|---|---|
| | DN2 | f | fM | l4 | l5 | Weight |
| 4SDPM 4/5C | Rp 1 1/4" | 257 | 584 | 4" | 98 | 9.7 |
| 4SDPM 4/7C | Rp 1 1/4" | 301 | 663 | 4" | 98 | 11.6 |
| 4SDPM 4/9C | Rp 1 1/4" | 344 | 706 | 4" | 98 | 12.1 |
| 4SDPM 4/14C | Rp 1 1/4" | 452 | 854 | 4" | 98 | 14.7 |
| 4SDPM 4/18C | Rp 1 1/4" | 538 | 985 | 4" | 98 | 17.3 |
| 4SDPM 4/27C | Rp 1 1/4" | 805 | 1322 | 4" | 98 | 22.8 |

| TYPE | | mm | | | | kg |
|---|---|---|---|---|---|---|
| | DN2 | f | fM | l4 | l5 | Weight |
| 4SDP 6/7C | Rp 2" | 390 | 737 | 4" | 98 | 12 |
| 4SDP 6/10C | Rp 2" | 483 | 845 | 4" | 98 | 13.5 |
| 4SDP 6/14C | Rp 2" | 607 | 1009 | 4" | 98 | 16.3 |
| 4SDP 6/20C | Rp 2" | 831 | 1233 | 4" | 98 | 19.5 |
| 4SDP 6/27C | Rp 2" | 1086 | 1567 | 4" | 98 | 24.5 |
| 4SDP 6/34C | Rp 2" | 1295 | 1841 | 4" | 98 | 29.7 |
| 4SDP 6/36C | Rp 2" | 1356 | 1902 | 4" | 98 | 30.2 |
| 4SDP 6/49C | Rp 2" | 1840 | 2486 | 4" | 98 | 41 |

| TYPE | | mm | | | | kg |
|---|---|---|---|---|---|---|
| | DN2 | f | fM | l4 | l5 | Weight |
| 4SDPM 6/7C | Rp 2" | 390 | 752 | 4" | 98 | 12.5 |
| 4SDPM 6/10C | Rp 2" | 483 | 885 | 4" | 98 | 15 |
| 4SDPM 6/14C | Rp 2" | 607 | 1054 | 4" | 98 | 18.1 |
| 4SDPM 6/20C | Rp 2" | 831 | 1348 | 4" | 98 | 23.1 |

| TYPE | | mm | | | | kg |
|---|---|---|---|---|---|---|
| | DN2 | f | fM | l4 | l5 | Weight |
| 4SDP 8/4C | Rp 2" | 294 | 641 | 4" | 98 | 11.1 |
| 4SDP 8/6C | Rp 2" | 356 | 718 | 4" | 98 | 12.5 |
| 4SDP 8/8C | Rp 2" | 418 | 820 | 4" | 98 | 16.3 |
| 4SDP 8/13C | Rp 2" | 573 | 975 | 4" | 98 | 16.7 |
| 4SDP 8/17C | Rp 2" | 697 | 1178 | 4" | 98 | 20.5 |
| 4SDP 8/21C | Rp 2" | 859 | 1405 | 4" | 98 | 24.9 |
| 4SDP 8/23C | Rp 2" | 959 | 1505 | 4" | 98 | 25.9 |
| 4SDP 8/32C | Rp 2" | 1276 | 1922 | 4" | 98 | 33.8 |

| TYPE | | mm | | | | kg |
|---|---|---|---|---|---|---|
| | DN2 | f | fM | l4 | l5 | Weight |
| 4SDPM 8/4C | Rp 2" | 294 | 656 | 4" | 98 | 11.7 |
| 4SDPM 8/6C | Rp 2" | 356 | 758 | 4" | 98 | 14 |
| 4SDPM 8/8C | Rp 2" | 418 | 865 | 4" | 98 | 16.9 |
| 4SDPM 8/13C | Rp 2" | 573 | 1090 | 4" | 98 | 21.2 |

| TYPE | | mm | | | | kg |
|---|---|---|---|---|---|---|
| | DN2 | f | fM | l4 | l5 | Weight |
| 4SDP 16/8C | Rp 2" | 676 | 1078 | 4" | 98 | 17.5 |
| 4SDP 16/11C | Rp 2" | 880 | 1361 | 4" | 98 | 20.5 |
| 4SDP 16/13C | Rp 2" | 1013 | 1559 | 4" | 98 | 26.2 |
| 4SDP 16/15C | Rp 2" | 1149 | 1695 | 4" | 98 | 27.3 |
| 4SDP 16/20C | Rp 2" | 1489 | 2135 | 4" | 98 | 35 |
| 4SDP 16/27C | Rp 2" | 2020 | 2820 | 4" | 98 | - |

| TYPE | | mm | | | | kg |
|---|---|---|---|---|---|---|
| | DN2 | f | fM | l4 | l5 | Weight |
| 4SDPM 16/8C | Rp 2" | 676 | 1193 | 4" | 98 | 21.6 |

# SDP

## Dimensions and weights

| TYPE | | mm | | | kg |
|---|---|---|---|---|---|
| | DN2 | f | l4 | l5 | Weight |
| 6SDP 20/9 4SM | G2 1/2 | 568 | 127 | 135 | 10 |
| 6SDP 20/12 4SM | G2 1/2 | 658 | 127 | 135 | 12.7 |
| 6SDP 20/18 4SM | G2 1/2 | 897 | 127 | 135 | 16.5 |
| 6SDP 20/24 4SM | G2 1/2 | 1077 | 127 | 135 | 18.5 |
| 6SDP 20/30 4SM | G2 1/2 | 1257 | 127 | 135 | 22.6 |
| 6SDP 20/30 6SM | G2 1/2 | 1292 | 141 | 145 | 24 |
| 6SDP 20/36 6SM | G2 1/2 | 1664 | 141 | 145 | 33 |
| 6SDP 20/40 6SM | G2 1/2 | 1784 | 141 | 145 | 35 |
| 6SDP 20/44 6SM | G2 1/2 | 1904 | 141 | 145 | 30 |
| 6SDP 20/50 6SM | G2 1/2 | 2084 | 141 | 145 | 39 |
| 6SDP 20/56 6SM | G2 1/2 | 2264 | 141 | 145 | 36 |
| 6SDP 20/63 6SM | G2 1/2 | 2474 | 141 | 145 | 40.8 |
| 6SDP 20/70 6SM | G2 1/2 | 2684 | 141 | 145 | 44.8 |
| 6SDP 20/76 6SM | G2 1/2 | 2864 | 141 | 145 | 52 |
| 6SDP 25/7 4SM | G2 1/2 | 508 | 127 | 135 | 11.2 |
| 6SDP 25/10 4SM | G2 1/2 | 598 | 127 | 135 | 12 |
| 6SDP 25/13 4SM | G2 1/2 | 688 | 127 | 135 | 11.7 |
| 6SDP 25/17 4SM | G2 1/2 | 867 | 127 | 135 | 14.4 |
| 6SDP 25/17 6SM | G2 1/2 | 902 | 141 | 145 | 16.6 |
| 6SDP 25/21 4SM | G2 1/2 | 987 | 127 | 135 | 18 |
| 6SDP 25/21 6SM | G2 1/2 | 1022 | 141 | 145 | 19 |
| 6SDP 25/24 4SM | G2 1/2 | 1077 | 127 | 135 | 19.5 |
| 6SDP 25/24 6SM | G2 1/2 | 1112 | 141 | 145 | 23 |
| 6SDP 25/28 6SM | G2 1/2 | 1232 | 141 | 145 | 25 |
| 6SDP 25/32 6SM | G2 1/2 | 1352 | 141 | 145 | 27 |
| 6SDP 25/36 6SM | G2 1/2 | 1664 | 141 | 145 | 25.8 |
| 6SDP 25/40 6SM | G2 1/2 | 1784 | 141 | 145 | 14 |
| 6SDP 25/44 6SM | G2 1/2 | 1904 | 141 | 145 | 29.3 |
| 6SDP 25/50 6SM | G2 1/2 | 2084 | 141 | 145 | 40 |
| 6SDP 25/56 6SM | G2 1/2 | 2264 | 141 | 145 | 35.8 |
| 6SDP 25/63 6SM | G2 1/2 | 2474 | 141 | 145 | 37 |
| 6SDP 30/5 4SM | G2 1/2 | 473 | 127 | 135 | 8.3 |
| 6SDP 30/8 4SM | G2 1/2 | 578 | 127 | 135 | 10 |
| 6SDP 30/10 4SM | G2 1/2 | 648 | 127 | 135 | 13 |
| 6SDP 30/13 4SM | G2 1/2 | 812 | 127 | 135 | 13.2 |
| 6SDP 30/13 6SM | G2 1/2 | 847 | 141 | 145 | 15.4 |
| 6SDP 30/16 4SM | G2 1/2 | 917 | 127 | 135 | 47.9 |
| 6SDP 30/16 6SM | G2 1/2 | 952 | 141 | 145 | 20 |
| 6SDP 30/18 4SM | G2 1/2 | 987 | 127 | 135 | 16.3 |
| 6SDP 30/18 6SM | G2 1/2 | 1022 | 141 | 145 | 19 |
| 6SDP 30/21 4SM | G2 1/2 | 1092 | 127 | 135 | 21 |
| 6SDP 30/21 6SM | G2 1/2 | 1127 | 141 | 145 | 19.8 |
| 6SDP 30/24 4SM | G2 1/2 | 1197 | 127 | 135 | 22.1 |
| 6SDP 30/24 6SM | G2 1/2 | 1232 | 141 | 145 | 24 |
| 6SDP 30/28 6SM | G2 1/2 | 1372 | 141 | 145 | 24.6 |
| 6SDP 30/31 6SM | G2 1/2 | 1477 | 141 | 145 | 29 |
| 6SDP 30/36 6SM | G2 1/2 | 1652 | 141 | 145 | 28 |
| 6SDP 30/42 6SM | G2 1/2 | 2054 | 141 | 145 | 36.2 |
| 6SDP 30/47 6SM | G2 1/2 | 2229 | 141 | 145 | 41 |
| 6SDP 30/52 6SM | G2 1/2 | 2404 | 141 | 145 | 43.5 |
| 6SDP 30/56 6SM | G2 1/2 | 2544 | 141 | 145 | 45 |
| 6SDP 30/60 6SM | G2 1/2 | 2684 | 141 | 145 | 49 |
| 6SDP 30/65 6SM | G2 1/2 | 2859 | 141 | 145 | 53 |

| TYPE | | mm | | | kg |
|---|---|---|---|---|---|
| | DN2 | f | l4 | l5 | Weight |
| 6SDP 35/3 4SM | G2 1/2 | 403 | 127 | 135 | 7.5 |
| 6SDP 35/4 4SM | G2 1/2 | 438 | 127 | 135 | 8 |
| 6SDP 35/6 4SM | G2 1/2 | 508 | 127 | 135 | 8.8 |
| 6SDP 35/7 4SM | G2 1/2 | 543 | 127 | 135 | 10.5 |
| 6SDP 35/9 4SM | G2 1/2 | 613 | 127 | 135 | 11 |
| 6SDP 35/9 6SM | G2 1/2 | 648 | 141 | 145 | 12.2 |
| 6SDP 35/11 4SM | G2 1/2 | 683 | 127 | 135 | 13 |
| 6SDP 35/11 6SM | G2 1/2 | 718 | 141 | 145 | 15 |
| 6SDP 35/13 4SM | G2 1/2 | 812 | 127 | 135 | 13 |
| 6SDP 35/13 6SM | G2 1/2 | 847 | 141 | 145 | 15 |
| 6SDP 35/15 4SM | G2 1/2 | 882 | 127 | 135 | 16.6 |
| 6SDP 35/15 6SM | G2 1/2 | 917 | 141 | 145 | 16.6 |
| 6SDP 35/18 4SM | G2 1/2 | 987 | 127 | 135 | 17.5 |
| 6SDP 35/18 6SM | G2 1/2 | 1022 | 141 | 145 | 17.6 |
| 6SDP 35/22 6SM | G2 1/2 | 1162 | 141 | 145 | 23 |
| 6SDP 35/26 6SM | G2 1/2 | 1302 | 141 | 145 | 25 |
| 6SDP 35/31 6SM | G2 1/2 | 1477 | 141 | 145 | 29 |
| 6SDP 35/35 6SM | G2 1/2 | 1617 | 141 | 145 | 28 |
| 6SDP 35/40 6SM | G2 1/2 | 1984 | 141 | 145 | 36 |
| 6SDP 35/44 6SM | G2 1/2 | 2124 | 141 | 145 | 38 |
| 6SDP 35/48 6SM | G2 1/2 | 2264 | 141 | 145 | 42 |
| 6SDP 35/52 6SM | G2 1/2 | 2404 | 141 | 145 | 42.8 |
| 6SDP 35/56 6SM | G2 1/2 | 2544 | 141 | 145 | 45.2 |
| 6SDP 35/60 6SM | G2 1/2 | 2684 | 141 | 145 | 47.5 |
| 6SDP 35/65 6SM | G2 1/2 | 2859 | 141 | 145 | 48 |
| 6SDP 40/3 4SM | G2 1/2 | 418 | 127 | 135 | 7.4 |
| 6SDP 40/4 4SM | G2 1/2 | 458 | 127 | 135 | 8 |
| 6SDP 40/6 4SM | G2 1/2 | 538 | 127 | 135 | 9 |
| 6SDP 40/8 4SM | G2 1/2 | 618 | 127 | 135 | 12 |
| 6SDP 40/8 6SM | G2 1/2 | 653 | 141 | 145 | 12.1 |
| 6SDP 40/10 4SM | G2 1/2 | 698 | 127 | 135 | 11.4 |
| 6SDP 40/10 6SM | G2 1/2 | 733 | 141 | 145 | 15 |
| 6SDP 40/13 4SM | G2 1/2 | 877 | 127 | 135 | 13.9 |
| 6SDP 40/13 6SM | G2 1/2 | 912 | 141 | 145 | 16 |
| 6SDP 40/16 6SM | G2 1/2 | 1032 | 141 | 145 | 17.8 |
| 6SDP 40/20 6SM | G2 1/2 | 1192 | 141 | 145 | 21 |
| 6SDP 40/23 6SM | G2 1/2 | 1312 | 141 | 145 | 22.4 |
| 6SDP 40/26 6SM | G2 1/2 | 1432 | 141 | 145 | 23 |
| 6SDP 40/30 6SM | G2 1/2 | 1592 | 141 | 145 | 26 |
| 6SDP 40/33 6SM | G2 1/2 | 1712 | 141 | 145 | 28.3 |
| 6SDP 40/38 6SM | G2 1/2 | 2104 | 141 | 145 | 38 |
| 6SDP 40/42 6SM | G2 1/2 | 2264 | 141 | 145 | 40 |
| 6SDP 40/44 6SM | G2 1/2 | 2344 | 141 | 145 | 38 |
| 6SDP 40/48 6SM | G2 1/2 | 2504 | 141 | 145 | 43.8 |
| 6SDP 40/51 6SM | G2 1/2 | 2624 | 141 | 145 | 40 |
| 6SDP 40/55 6SM | G2 1/2 | 2784 | 141 | 145 | 46 |
| 6SDP 40/60 6SM | G2 1/2 | 2984 | 141 | 145 | 49 |

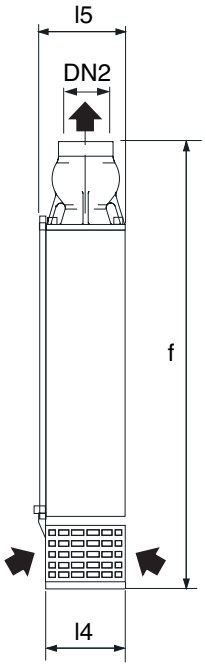


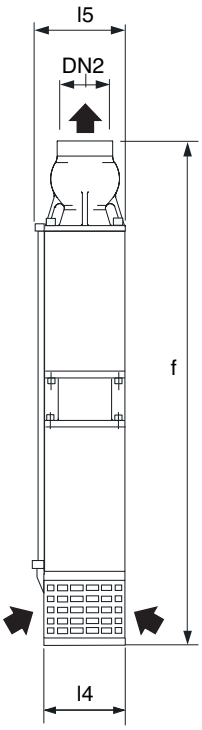

# SDP

## Dimensions and weights

| TYPE | | mm | | | kg |
|---|---|---|---|---|---|
| | DN2 | f | l4 | l5 | Weight |
| 6SDP 52/2AB 4SM | G3 | 484 | 127 | 135 | 8.3 |
| 6SDP 50/3 4SM | G2 1/2 | 448 | 127 | 135 | 7.8 |
| 6SDP 50/4 4SM | G2 1/2 | 498 | 127 | 135 | 8.5 |
| 6SDP 50/5 4SM | G2 1/2 | 548 | 127 | 135 | 10 |
| 6SDP 50/5 6SM | G2 1/2 | 583 | 141 | 145 | 12 |
| 6SDP 50/7 4SM | G2 1/2 | 648 | 127 | 135 | 10.7 |
| 6SDP 50/7 6SM | G2 1/2 | 683 | 141 | 145 | 15 |
| 6SDP 50/10 4SM | G2 1/2 | 857 | 127 | 135 | 14 |
| 6SDP 50/10 6SM | G2 1/2 | 892 | 141 | 145 | 15.6 |
| 6SDP 50/12 6SM | G2 1/2 | 992 | 141 | 145 | 17 |
| 6SDP 50/15 6SM | G2 1/2 | 1142 | 141 | 145 | 20 |
| 6SDP 50/17 6SM | G2 1/2 | 1242 | 141 | 145 | 20.7 |
| 6SDP 50/20 6SM | G2 1/2 | 1392 | 141 | 145 | 25 |
| 6SDP 50/25 6SM | G2 1/2 | 1642 | 141 | 145 | 28 |
| 6SDP 50/30 6SM | G2 1/2 | 2084 | 141 | 145 | 37 |
| 6SDP 50/35 6SM | G2 1/2 | 2334 | 141 | 145 | 40 |
| 6SDP 50/40 6SM | G2 1/2 | 2584 | 141 | 145 | 44.5 |
| 6SDP 50/45 6SM | G2 1/2 | 2834 | 141 | 145 | 47.9 |
| 6SDP 50/48 6SM | G2 1/2 | 2984 | 141 | 145 | 50.5 |
| 6SDP 52/3B 4SM | G3 | 544 | 127 | 135 | 12 |
| 6SDP 52/3A 4SM | G3 | 544 | 127 | 135 | 11.9 |
| 6SDP 52/3A 6SM | G3 | 544 | 141 | 145 | 11 |
| 6SDP 52/4A 4SM | G3 | 604 | 127 | 135 | 11 |
| 6SDP 52/4A 6SM | G3 | 604 | 141 | 145 | 12 |
| 6SDP 52/6K 4SM | G3 | 724 | 127 | 135 | 18 |
| 6SDP 52/6K 6SM | G3 | 724 | 141 | 145 | 15 |
| 6SDP 52/7A 6SM | G3 | 784 | 141 | 145 | 14.6 |
| 6SDP 52/9K 6SM | G3 | 963 | 141 | 145 | 16.5 |
| 6SDP 52/10I 6SM | G3 | 1023 | 141 | 145 | 18.2 |
| 6SDP 52/12K 6SM | G3 | 1143 | 141 | 145 | 20.9 |
| 6SDP 52/14A 6SM | G3 | 1263 | 141 | 145 | 25 |
| 6SDP B52/17A 6SM | G3 | 1650 | 141 | 145 | 32 |
| 6SDP B52/19A 6SM | G3 | 1770 | 141 | 145 | 33 |
| 6SDP B52/22A 6SM | G3 | 1950 | 141 | 145 | 57.3 |
| 6SDP B52/25A 6SM | G3 | 2130 | 141 | 145 | 60 |
| 6SDP B52/28A 6SM | G3 | 2310 | 141 | 145 | 42 |

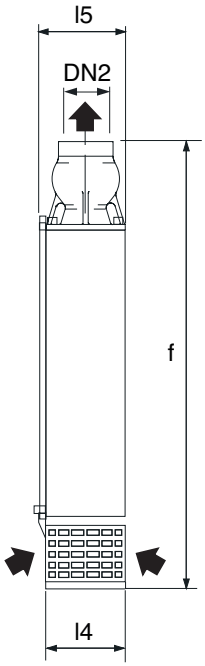


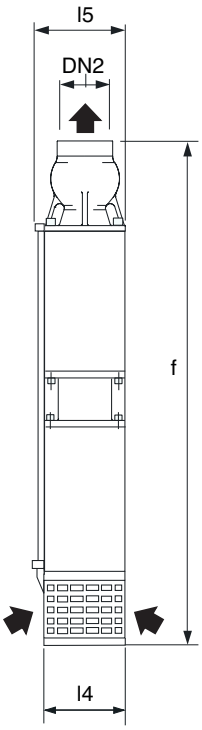

ed. 03/2025

# SDX

calpeda®

# Submersible borehole pumps for 6” and 8” wells

# SDX

calpeda®

## Construction

Submersible pumps for deep wells 4” (DN 100 mm), 6” (DN 150 mm), 8” (DN 200 mm).
**4, 6, 8 SDX:** with outer jacket and stages made of steel 1.4301 EN 10088 (AISI 304).
**6, 8 SDXL:** with outer jacket and stages made of 1.4401 EN 10088 (AISI 316).

**Impellers**
Radial impellers:
- 4SDX 1-2-3-5-8, 6SDXL 18
mixed flow impellers:
- 4SDX 12, 6SDX 16-28-45-60, 8SDX 77-95
- 6SDXL 30-46-65, 8SDXL 78-97
**Connection:** Threaded Rp 11/4, 11/2, 2”, 21/2, 3”, 4”, 5”
Delivery casing with built-in non-return valve.

## Applications

For water supply systems.
For civil and industrial applications.
For fire fighting applications.
For irrigation.

## Operating conditions

Liquid temperature:
- 35 °C for 4SDX
- 30 °C for 6SDX
- 60 °C for 8SDX
- 90 °C for SDXL.
Maximum amount of sand in the water:
- 50 g/m3 per 4SDX, 6SDX, 8SDX
- 100 g/m3 for SDXL.
Continuous duty.

## Designation

Example: 6 SDX L 30 / 17 6SM
6 = Well diameter in inches
SDX = Series
L = Design made of 1.4401 EN 10088 (AISI 316)
30 = Stage identification
17 = Number of stages
6SM = Motor flange coupling

**The electropumps comply with the European Regulation no. 547/2012.**

## Motor

2-pole induction motor, 50 Hz (n ≈ 2900 rpm).
Sized for connection to the pumps according to NEMA Standards (10” excluded).
Standard voltages:
single-phase 230 V - up to 2,2 kW for 4” motors.
three-phase 230 V; 400 V, for 4” motors.
400 V; 400/690 V for 6-8-10” motors.
Voltage tolerance : ± 10%
In order to limit both current and torque at each starting, for rated motor powers equal to or higher than 7.5 kW, one of the following types of starting is necessary: star/delta, soft starter, stator impedance or autotransformer.
Insulation class: - F for motors 4"
Protection IP 68.
Installation below water level: 100 m for 4”, 150 m for 6”, 500 m for 8,10” 4” motor
Motor suitable operation with frequency converter (with suitable filter dv/dt).
Horizontal installation (6" 37-45kW, 8" 92kW, 10" 170-190 kW excluded)

| Motor | Motor P2 | Max. Liquid temperature | Cooling minimum flow velocity | Max n° of starting x hour |
|---|---|---|---|---|
| 4CS-R | all | 35 °C | 0,1 m/s | 30 |
| 6CS-R | 4÷15 kW | 40 °C | 0,5 m/s | 20 |
| 6CS-R | 18,5÷30 kW | 35 °C | 0,5 m/s | 20 |
| 6CS-R | 37 kW | 30 °C | 0,5 m/s | 20 |
| 8CS-R | 30÷45 kW | 30 °C | 0,2 m/s | 10 |
| 8CS-R | 51 kW | 30 °C | 0,2 m/s | 8 |
| 8CS-R | 59÷75 kW | 30 °C | 0,5 m/s | 8 |
| 8CS-R | 92÷110 kW | 30 °C | 0,5 m/s | 6 |
| 10CS-R | all | 25 °C | 0,5 m/s | 6 |

## Special features on request

Other voltages.
Frequency 60 Hz (as per 60 Hz data sheet).
Other temperatures.
Encapsulated motor FK series.

## Materials

| Components | 6SDX | 6SDXL | 8SDX | 8SDXL |
|---|---|---|---|---|
| External jacket | Cr-Ni steel AISI 304 | Acciaio Cr-Ni-Mo AISI 316L | Cr-Ni steel AISI 304 | Acciaio Cr-Ni-Mo AISI 316 |
| Suction lantern | Cr-Ni steel AISI 304 | Acciaio Cr-Ni-Mo AISI 316L | Cr-Ni steel AISI 304 | Acciaio Cr-Ni-Mo AISI 316 |
| delivery casing | Cr-Ni steel AISI 304 | Acciaio Cr-Ni-Mo AISI 316L | Cr-Ni steel AISI 304 | Acciaio Cr-Ni-Mo AISI 316 |
| Upper cover | Cr-Ni steel AISI 304 | Acciaio Cr-Ni-Mo AISI 316L | - | - |
| Filter | Cr-Ni steel AISI 304 | Acciaio Cr-Ni-Mo AISI 316 | Cr-Ni steel AISI 304 | Acciaio Cr-Ni-Mo AISI 316 |
| Valve set | Cr-Ni steel AISI 304 | Acciaio Cr-Ni-Mo AISI 316 | Cr-Ni steel AISI 304 | Acciaio Cr-Ni-Mo AISI 316 |
| O-ring valve | NBR | NBR | NBR | NBR |
| Shaft | Steel Cr AISI 431 | Acciaio Cr-Ni-Mo AISI 316 | Steel Cr AISI 431 | Steel Cr Ni Mo AISI 329 |
| Coupling set | Steel Cr AISI 431 | Cr-Ni-Mo steel AISI 316/329 | Steel Cr AISI 431 | Cr-Ni-Mo steel AISI 316/329 |
| Diffuser | Cr-Ni steel AISI 304L | Acciaio Cr-Ni-Mo AISI 316L | Cr Ni Steel AISI 304L | Acciaio Cr-Ni-Mo AISI 316 |
| Stage casing | Cr-Ni steel AISI 304 | Acciaio Cr-Ni-Mo AISI 316L | Cr-Ni steel AISI 304 | Acciaio Cr-Ni-Mo AISI 316 |
| Impeller | Cr-Ni steel AISI 304L | Acciaio Cr-Ni-Mo AISI 316L | Cr Ni Steel AISI 304L | Acciaio Cr-Ni-Mo AISI 316 |
| Wear ring | NBR | Teflon (PTFE) | NBR/HNBR | Teflon (PTFE) |
| Bearing bush | NBR | HNBR | NBR | HNBR |
| Cable guard Screws | Cr Ni AISI 304 steel (AISI 316 steel for 4SDX) | Acciaio Cr-Ni-Mo AISI 316 | Cr-Ni steel AISI 304 | Acciaio Cr-Ni-Mo AISI 316 |

**Attention for complete materials refer to the Pump Selector on the Calpeda website**

# SDX

## Coverage chart n ≈ 2900 rpm

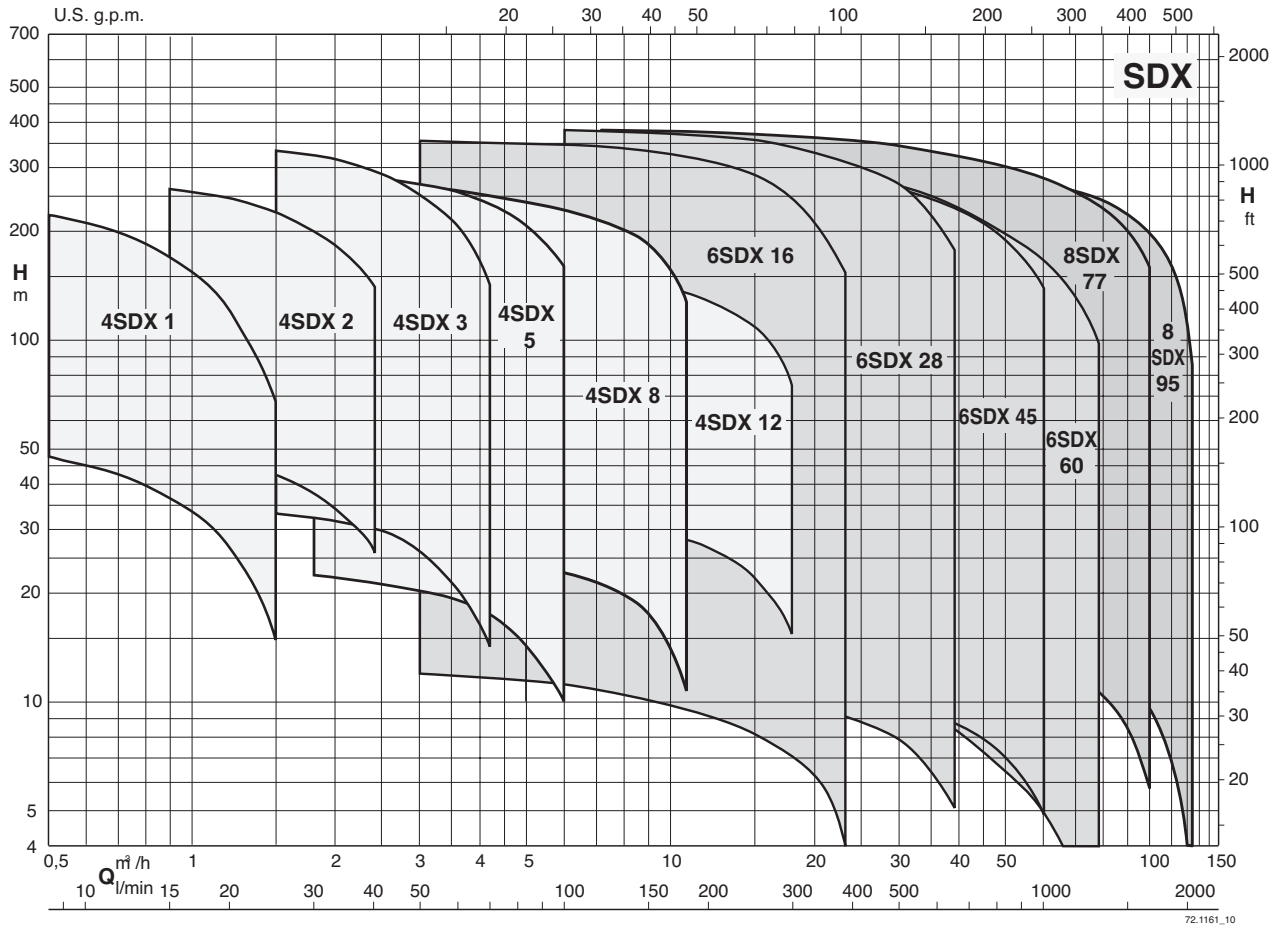


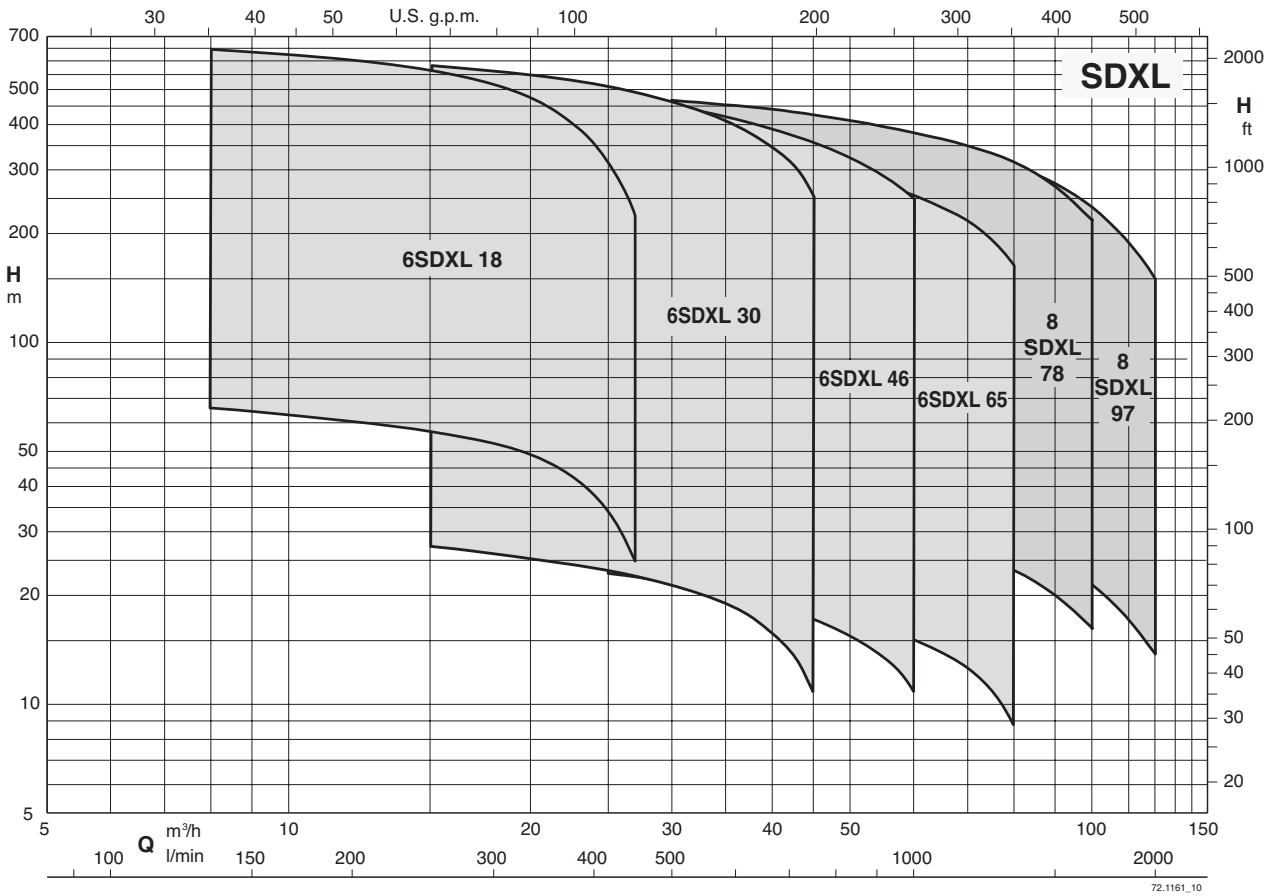

# SDX

calpeda®

## Coverage chart n ≈ 2900 rpm

### Three-phase

| | | | | Q = Flow | | | | | | | | | | | | | | | | | | | | | | |
|---|---|---|---|---|---|---|---|---|---|---|---|---|---|---|---|---|---|---|---|---|---|---|---|---|---|---|
| | | | | m³/h | 0 | 0,3 | 0,6 | 0,9 | 1,2 | 1,5 | 1,8 | 2,1 | 2,4 | 2,7 | 3 | 3,6 | 4,2 | 4,8 | 5,4 | 6 | 7,2 | 8,4 | 9,6 | 10,8 | 12 | 15 | 18 |
| Model | 230V | P2 | | l/min | | 5 | 10 | 15 | 20 | 25 | 30 | 35 | 40 | 45 | 50 | 60 | 70 | 80 | 90 | 100 | 120 | 140 | 160 | 180 | 200 | 250 | 300 |
| | A | kW | HP | H (m) = Total head | | | | | | | | | | | | | | | | | | | | | | | |
| 4SDX 1/9C | 1,7 | 0,37 | 0,5 | | 50 | 47 | 45 | 36 | 26 | 14 | - | - | - | - | - | - | - | - | - | - | - | - | - | - | - | - | - |
| 4SDX 1/14C | 1,7 | 0,37 | 0,5 | | 78 | 75 | 68 | 55 | 38 | 21 | - | - | - | - | - | - | - | - | - | - | - | - | - | - | - | - | - |
| 4SDX 1/18C | 2 | 0,55 | 0,75 | | 102 | 97 | 88 | 72 | 52 | 27 | - | - | - | - | - | - | - | - | - | - | - | - | - | - | - | - | - |
| 4SDX 1/21C | 2 | 0,55 | 0,75 | | 118 | 111 | 100 | 81 | 58 | 30 | - | - | - | - | - | - | - | - | - | - | - | - | - | - | - | - | - |
| 4SDX 1/28C | 2,5 | 0,75 | 1 | | 158 | 151 | 138 | 111 | 79 | 42 | - | - | - | - | - | - | - | - | - | - | - | - | - | - | - | - | - |
| 4SDX 1/36C | 3,3 | 1,1 | 1,5 | | 205 | 196 | 175 | 144 | 103 | 54 | - | - | - | - | - | - | - | - | - | - | - | - | - | - | - | - | - |
| 4SDX 1/42C | 3,3 | 1,1 | 1,5 | | 238 | 227 | 203 | 168 | 118 | 67 | - | - | - | - | - | - | - | - | - | - | - | - | - | - | - | - | - |
| 4SDX 2/9C | 1,7 | 0,37 | 0,5 | | 52 | - | - | 48 | 45 | 42 | 38 | 33 | 27 | - | - | - | - | - | - | - | - | - | - | - | - | - | - |
| 4SDX 2/13C | 2 | 0,55 | 0,75 | | 76 | - | - | 68 | 64 | 59 | 53 | 46 | 37 | - | - | - | - | - | - | - | - | - | - | - | - | - | - |
| 4SDX 2/18C | 2,5 | 0,75 | 1 | | 104 | - | - | 94 | 89 | 82 | 74 | 63 | 51 | - | - | - | - | - | - | - | - | - | - | - | - | - | - |
| 4SDX 2/23C | 3,3 | 1,1 | 1,5 | | 136 | - | - | 124 | 117 | 109 | 98 | 85 | 69 | - | - | - | - | - | - | - | - | - | - | - | - | - | - |
| 4SDX 2/28C | 4,4 | 1,5 | 2 | | 166 | - | - | 153 | 144 | 134 | 121 | 105 | 85 | - | - | - | - | - | - | - | - | - | - | - | - | - | - |
| 4SDX 2/33C | 4,4 | 1,5 | 2 | | 196 | - | - | 182 | 172 | 159 | 143 | 124 | 101 | - | - | - | - | - | - | - | - | - | - | - | - | - | - |
| 4SDX 2/40C | 6,1 | 2,2 | 3 | | 235 | - | - | 217 | 205 | 190 | 170 | 47 | 119 | - | - | - | - | - | - | - | - | - | - | - | - | - | - |
| 4SDX 2/48C | 6,1 | 2,2 | 3 | | 280 | - | - | 261 | 246 | 227 | 205 | 178 | 144 | - | - | - | - | - | - | - | - | - | - | - | - | - | - |
| 4SDX 3/6C | 1,7 | 0,37 | 0,5 | | 38 | - | - | - | - | 33 | 32 | 31 | 30 | 28 | 26 | 21 | 14 | - | - | - | - | - | - | - | - | - | - |
| 4SDX 3/9C | 2 | 0,55 | 0,75 | | 57 | - | - | - | - | 49 | 47 | 46 | 43 | 41 | 38 | 30 | 19 | - | - | - | - | - | - | - | - | - | - |
| 4SDX 3/12C | 2,5 | 0,75 | 1 | | 77 | - | - | - | - | 66 | 64 | 62 | 58 | 56 | 52 | 42 | 28 | - | - | - | - | - | - | - | - | - | - |
| 4SDX 3/15C | 3,3 | 1,1 | 1,5 | | 97 | - | - | - | - | 85 | 83 | 80 | 77 | 74 | 69 | 57 | 40 | - | - | - | - | - | - | - | - | - | - |
| 4SDX 3/18C | 3,3 | 1,1 | 1,5 | | 116 | - | - | - | - | 101 | 97 | 94 | 90 | 85 | 80 | 67 | 45 | - | - | - | - | - | - | - | - | - | - |
| 4SDX 3/22C | 4,4 | 1,5 | 2 | | 142 | - | - | - | - | 123 | 120 | 115 | 110 | 105 | 98 | 80 | 54 | - | - | - | - | - | - | - | - | - | - |
| 4SDX 3/25C | 4,4 | 1,5 | 2 | | 160 | - | - | - | - | 139 | 134 | 129 | 123 | 117 | 110 | 90 | 61 | - | - | - | - | - | - | - | - | - | - |
| 4SDX 3/29C | 6,1 | 2,2 | 3 | | 185 | - | - | - | - | 160 | 155 | 150 | 143 | 136 | 127 | 103 | 70 | - | - | - | - | - | - | - | - | - | - |
| 4SDX 3/33C | 6,1 | 2,2 | 3 | | 211 | - | - | - | - | 183 | 177 | 171 | 164 | 155 | 145 | 118 | 80 | - | - | - | - | - | - | - | - | - | - |
| 4SDX 3/39C | 6,9 | 3 | 4 | | 251 | - | - | - | - | 219 | 212 | 205 | 196 | 185 | 172 | 138 | 95 | - | - | - | - | - | - | - | - | - | - |
| 4SDX 3/45C | 6,9 | 3 | 4 | | 288 | - | - | - | - | 250 | 242 | 234 | 224 | 213 | 199 | 162 | 110 | - | - | - | - | - | - | - | - | - | - |
| 4SDX 3/52C | 9,4 | 4 | 5,5 | | 334 | - | - | - | - | 291 | 282 | 272 | 261 | 247 | 230 | 184 | 124 | - | - | - | - | - | - | - | - | - | - |
| 4SDX 3/60C | 9,4 | 4 | 5,5 | | 384 | - | - | - | - | 336 | 325 | 312 | 297 | 280 | 260 | 210 | 143 | - | - | - | - | - | - | - | - | - | - |
| 4SDX 5/4C | 1,7 | 0,37 | 0,5 | | 25 | - | - | - | - | - | 23 | 22 | 21 | - | 20 | 19 | 17 | 15 | 12 | 10 | - | - | - | - | - | - | - |
| 4SDX 5/6C | 2 | 0,55 | 0,75 | | 38 | - | - | - | - | - | 34 | 33 | 32 | - | 30 | 28 | 26 | 23 | 20 | 16 | - | - | - | - | - | - | - |
| 4SDX 5/8C | 2,5 | 0,75 | 1 | | 51 | - | - | - | - | - | 45 | 44 | 43 | - | 41 | 39 | 36 | 32 | 28 | 23 | - | - | - | - | - | - | - |
| 4SDX 5/12C | 3,3 | 1,1 | 1,5 | | 77 | - | - | - | - | - | 68 | 67 | 66 | - | 63 | 60 | 56 | 51 | 44 | 37 | - | - | - | - | - | - | - |
| 4SDX 5/17C | 4,4 | 1,5 | 2 | | 108 | - | - | - | - | - | 96 | 94 | 92 | - | 88 | 83 | 77 | 70 | 62 | 53 | - | - | - | - | - | - | - |
| 4SDX 5/21C | 6,1 | 2,2 | 3 | | 134 | - | - | - | - | - | 118 | 115 | 113 | - | 108 | 103 | 96 | 87 | 77 | 67 | - | - | - | - | - | - | - |
| 4SDX 5/25C | 6,1 | 2,2 | 3 | | 157 | - | - | - | - | - | 138 | 136 | 133 | - | 127 | 121 | 113 | 103 | 90 | 78 | - | - | - | - | - | - | - |
| 4SDX 5/33C | 6,9 | 3 | 4 | | 209 | - | - | - | - | - | 184 | 180 | 176 | - | 168 | 153 | 149 | 137 | 122 | 105 | - | - | - | - | - | - | - |
| 4SDX 5/38C | 9,4 | 4 | 5,5 | | 242 | - | - | - | - | - | 212 | 208 | 203 | - | 194 | 184 | 172 | 158 | 142 | 123 | - | - | - | - | - | - | - |
| 4SDX 5/44C | 9,4 | 4 | 5,5 | | 279 | - | - | - | - | - | 247 | 242 | 237 | - | 226 | 215 | 202 | 187 | 166 | 143 | - | - | - | - | - | - | - |
| 4SDX 5/52C | 13,4 | 5,5 | 7,5 | | 332 | - | - | - | - | - | 291 | 285 | 279 | - | 167 | 253 | 237 | 218 | 195 | 166 | - | - | - | - | - | - | - |
| 4SDX 8/5C | 2,5 | 0,75 | 1 | | 30 | - | - | - | - | - | - | - | 28 | - | - | 26 | - | 24 | 23 | 22 | 21 | 19 | 15 | 11 | - | - | - |
| 4SDX 8/7C | 3,3 | 1,1 | 1,5 | | 41 | - | - | - | - | - | - | - | 39 | - | - | 37 | - | 35 | 34 | 33 | 32 | 28 | 24 | 18 | - | - | - |
| 4SDX 8/10C | 4,4 | 1,5 | 2 | | 58 | - | - | - | - | - | - | - | 54 | - | - | 51 | - | 48 | 47 | 46 | 43 | 38 | 32 | 25 | - | - | - |
| 4SDX 8/12C | 6,1 | 2,2 | 3 | | 71 | - | - | - | - | - | - | - | 65 | - | - | 61 | - | 58 | 56 | 55 | 52 | 47 | 40 | 31 | - | - | - |
| 4SDX 8/15C | 6,1 | 2,2 | 3 | | 88 | - | - | - | - | - | - | - | 80 | - | - | 76 | - | 72 | 70 | 68 | 64 | 57 | 49 | 38 | - | - | - |
| 4SDX 8/18C | 6,9 | 3 | 4 | | 104 | - | - | - | - | - | - | - | 98 | - | - | 93 | - | 88 | 86 | 84 | 79 | 72 | 60 | 46 | - | - | - |
| 4SDX 8/21C | 9,4 | 4 | 5,5 | | 122 | - | - | - | - | - | - | - | 114 | - | - | 107 | - | 102 | 100 | 98 | 93 | 85 | 72 | 55 | - | - | - |
| 4SDX 8/25C | 9,4 | 4 | 5,5 | | 144 | - | - | - | - | - | - | - | 133 | - | - | 126 | - | 119 | 116 | 114 | 108 | 98 | 84 | 64 | - | - | - |
| 4SDX 8/30C | 13,4 | 5,5 | 7,5 | | 174 | - | - | - | - | - | - | - | 163 | - | - | 154 | - | 145 | 142 | 139 | 132 | 120 | 102 | 79 | - | - | - |
| 4SDX 8/37C | 13,4 | 5,5 | 7,5 | | 215 | - | - | - | - | - | - | - | 199 | - | - | 188 | - | 177 | 173 | 169 | 160 | 145 | 122 | 93 | - | - | - |
| 4SDX 8/44C | 16,4 | 7,5 | 10 | | 256 | - | - | - | - | - | - | - | 240 | - | - | 224 | - | 212 | 207 | 203 | 192 | 175 | 148 | 112 | - | - | - |
| 4SDX 8/50C | 16,4 | 7,5 | 10 | | 290 | - | - | - | - | - | - | - | 269 | - | - | 254 | - | 241 | 236 | 231 | 21 | 199 | 168 | 127 | - | - | - |
| 4SDX 12/5C | 4,4 | 1,5 | 2 | | 33 | - | - | - | - | - | - | - | - | - | - | - | - | - | - | 32 | 31 | 30 | 29 | 28 | 26 | 22 | 16 |
| 4SDX 12/7C | 6,1 | 2,2 | 3 | | 46 | - | - | - | - | - | - | - | - | - | - | - | - | - | - | 44 | 43 | 42 | 40 | 38 | 36 | 30 | 20 |
| 4SDX 12/10C | 6,9 | 3 | 4 | | 65 | - | - | - | - | - | - | - | - | - | - | - | - | - | - | 62 | 60 | 58 | 56 | 54 | 51 | 43 | 29 |
| 4SDX 12/13C | 9,4 | 4 | 5,5 | | 84 | - | - | - | - | - | - | - | - | - | - | - | - | - | - | 80 | 78 | 77 | 74 | 71 | 67 | 56 | 38 |
| 4SDX 12/18C | 13,4 | 5,5 | 7,5 | | 117 | - | - | - | - | - | - | - | - | - | - | - | - | - | - | 111 | 108 | 104 | 102 | 97 | 93 | 77 | 54 |
| 4SDX 12/25C | 16,4 | 7,5 | 10 | | 163 | - | - | - | - | - | - | - | - | - | - | - | - | - | - | 154 | 149 | 145 | 141 | 135 | 129 | 107 | 75 |

**P2:** Rated motor power output.
**H:** Total head in m

# SDX

calpeda®

## Coverage chart n ≈ 2900 rpm

### Single-phase

| | | | | | Q = Flow | | | | | | | | | | | | | | | | | | | | | | |
|---|---|---|---|---|---|---|---|---|---|---|---|---|---|---|---|---|---|---|---|---|---|---|---|---|---|---|---|
| | | | | | m³/h | 0 | 0,3 | 0,6 | 0,9 | 1,2 | 1,5 | 1,8 | 2,1 | 2,4 | 2,7 | 3 | 3,6 | 4,2 | 4,8 | 5,4 | 6 | 7,2 | 8,4 | 9,6 | 10,8 | 12 | 15 | 18 |
| Model | 230V | P2 | | P1 | l/min | | 5 | 10 | 15 | 20 | 25 | 30 | 35 | 40 | 45 | 50 | 60 | 70 | 80 | 90 | 100 | 120 | 140 | 160 | 180 | 200 | 250 | 300 |
| | A | kW | HP | kW | H (m) = Total head | | | | | | | | | | | | | | | | | | | | | | |
| 4SDXM 1/9C | 3,6 | 0,37 | 0,5 | 0,77 | | 50 | 47 | 45 | 36 | 26 | 14 | - | - | - | - | - | - | - | - | - | - | - | - | - | - | - | - |
| 4SDXM 1/14C | 3,6 | 0,37 | 0,5 | 0,77 | | 78 | 75 | 68 | 55 | 38 | 21 | - | - | - | - | - | - | - | - | - | - | - | - | - | - | - | - |
| 4SDXM 1/18C | 4,7 | 0,55 | 0,75 | 0,99 | | 102 | 97 | 88 | 72 | 52 | 27 | - | - | - | - | - | - | - | - | - | - | - | - | - | - | - | - |
| 4SDXM 1/21C | 4,7 | 0,55 | 0,75 | 0,99 | | 118 | 111 | 100 | 81 | 58 | 30 | - | - | - | - | - | - | - | - | - | - | - | - | - | - | - | - |
| 4SDXM 1/28C | 5,6 | 0,75 | 1 | 1,25 | | 158 | 151 | 138 | 111 | 79 | 42 | - | - | - | - | - | - | - | - | - | - | - | - | - | - | - | - |
| 4SDXM 1/36C | 7,6 | 1,1 | 1,5 | 1,64 | | 205 | 196 | 175 | 144 | 103 | 54 | - | - | - | - | - | - | - | - | - | - | - | - | - | - | - | - |
| 4SDXM 1/42C | 7,6 | 1,1 | 1,5 | 1,64 | | 238 | 227 | 203 | 168 | 118 | 67 | - | - | - | - | - | - | - | - | - | - | - | - | - | - | - | - |
| 4SDXM 2/9C | 3,6 | 0,37 | 0,5 | 0,77 | | 52 | - | - | 48 | 45 | 42 | 38 | 33 | 27 | - | - | - | - | - | - | - | - | - | - | - | - | - |
| 4SDXM 2/13C | 4,7 | 0,55 | 0,75 | 0,99 | | 76 | - | - | 68 | 64 | 59 | 53 | 46 | 37 | - | - | - | - | - | - | - | - | - | - | - | - | - |
| 4SDXM 2/18C | 5,6 | 0,75 | 1 | 1,25 | | 104 | - | - | 94 | 89 | 82 | 74 | 63 | 51 | - | - | - | - | - | - | - | - | - | - | - | - | - |
| 4SDXM 2/23C | 7,6 | 1,1 | 1,5 | 1,64 | | 136 | - | - | 124 | 117 | 109 | 98 | 85 | 69 | - | - | - | - | - | - | - | - | - | - | - | - | - |
| 4SDXM 2/28C | 10,7 | 1,5 | 2 | 2,26 | | 166 | - | - | 153 | 144 | 134 | 121 | 105 | 85 | - | - | - | - | - | - | - | - | - | - | - | - | - |
| 4SDXM 2/33C | 10,7 | 1,5 | 2 | 2,26 | | 196 | - | - | 182 | 172 | 159 | 143 | 124 | 101 | - | - | - | - | - | - | - | - | - | - | - | - | - |
| 4SDXM 2/40C | 14,6 | 2,2 | 3 | 3,12 | | 235 | - | - | 217 | 205 | 190 | 170 | 47 | 119 | - | - | - | - | - | - | - | - | - | - | - | - | - |
| 4SDXM 2/48C | 14,6 | 2,2 | 3 | 3,12 | | 280 | - | - | 261 | 246 | 227 | 205 | 178 | 144 | - | - | - | - | - | - | - | - | - | - | - | - | - |
| 4SDXM 3/6C | 3,6 | 0,37 | 0,5 | 0,77 | | 38 | - | - | - | - | 33 | 32 | 31 | 30 | 28 | 26 | 21 | 14 | - | - | - | - | - | - | - | - | - |
| 4SDXM 3/9C | 4,7 | 0,55 | 0,75 | 0,99 | | 57 | - | - | - | - | 49 | 47 | 46 | 43 | 41 | 38 | 30 | 19 | - | - | - | - | - | - | - | - | - |
| 4SDXM 3/12C | 5,6 | 0,75 | 1 | 1,25 | | 77 | - | - | - | - | 66 | 64 | 62 | 58 | 56 | 52 | 42 | 28 | - | - | - | - | - | - | - | - | - |
| 4SDXM 3/15C | 7,6 | 1,1 | 1,5 | 1,64 | | 97 | - | - | - | - | 85 | 83 | 80 | 77 | 74 | 69 | 57 | 40 | - | - | - | - | - | - | - | - | - |
| 4SDXM 3/18C | 7,6 | 1,1 | 1,5 | 1,64 | | 116 | - | - | - | - | 101 | 97 | 94 | 90 | 85 | 80 | 67 | 45 | - | - | - | - | - | - | - | - | - |
| 4SDXM 3/22C | 10,7 | 1,5 | 2 | 2,26 | | 142 | - | - | - | - | 123 | 120 | 115 | 110 | 105 | 98 | 80 | 54 | - | - | - | - | - | - | - | - | - |
| 4SDXM 3/25C | 10,7 | 1,5 | 2 | 2,26 | | 160 | - | - | - | - | 139 | 134 | 129 | 123 | 117 | 110 | 90 | 61 | - | - | - | - | - | - | - | - | - |
| 4SDXM 3/29C | 14,6 | 2,2 | 3 | 3,12 | | 185 | - | - | - | - | 160 | 155 | 150 | 143 | 136 | 127 | 103 | 70 | - | - | - | - | - | - | - | - | - |
| 4SDXM 3/33C | 14,6 | 2,2 | 3 | 3,12 | | 211 | - | - | - | - | 183 | 177 | 171 | 164 | 155 | 145 | 118 | 80 | - | - | - | - | - | - | - | - | - |
| 4SDXM 5/4C | 3,6 | 0,37 | 0,5 | 0,77 | | 25 | - | - | - | - | - | 23 | 22 | 21 | - | 20 | 19 | 17 | 15 | 12 | 10 | - | - | - | - | - | - |
| 4SDXM 5/6C | 4,7 | 0,55 | 0,75 | 0,99 | | 38 | - | - | - | - | - | 34 | 33 | 32 | - | 30 | 28 | 26 | 23 | 20 | 16 | - | - | - | - | - | - |
| 4SDXM 5/8C | 5,6 | 0,75 | 1 | 1,25 | | 51 | - | - | - | - | - | 45 | 44 | 43 | - | 41 | 39 | 36 | 32 | 28 | 23 | - | - | - | - | - | - |
| 4SDXM 5/12C | 7,6 | 1,1 | 1,5 | 1,64 | | 77 | - | - | - | - | - | 68 | 67 | 66 | - | 63 | 60 | 56 | 51 | 44 | 37 | - | - | - | - | - | - |
| 4SDXM 5/17C | 10,7 | 1,5 | 2 | 2,26 | | 108 | - | - | - | - | - | 96 | 94 | 92 | - | 88 | 83 | 77 | 70 | 62 | 53 | - | - | - | - | - | - |
| 4SDXM 5/21C | 14,6 | 2,2 | 3 | 3,12 | | 134 | - | - | - | - | - | 118 | 115 | 113 | - | 108 | 103 | 96 | 87 | 77 | 67 | - | - | - | - | - | - |
| 4SDXM 5/25C | 14,6 | 2,2 | 3 | 3,12 | | 157 | - | - | - | - | - | 138 | 136 | 133 | - | 127 | 121 | 113 | 103 | 90 | 78 | - | - | - | - | - | - |
| 4SDXM 8/5C | 5,6 | 0,75 | 1 | 1,25 | | 30 | - | - | - | - | - | - | - | 28 | - | - | 26 | - | 24 | 23 | 22 | 21 | 19 | 15 | 11 | - | - |
| 4SDXM 8/7C | 7,6 | 1,1 | 1,5 | 1,64 | | 41 | - | - | - | - | - | - | - | 39 | - | - | 37 | - | 35 | 34 | 33 | 32 | 28 | 24 | 18 | - | - |
| 4SDXM 8/10C | 10,7 | 1,5 | 2 | 2,26 | | 58 | - | - | - | - | - | - | - | 54 | - | - | 51 | - | 48 | 47 | 46 | 43 | 38 | 32 | 25 | - | - |
| 4SDXM 8/12C | 14,6 | 2,2 | 3 | 3,12 | | 71 | - | - | - | - | - | - | - | 65 | - | - | 61 | - | 58 | 56 | 55 | 52 | 47 | 40 | 31 | - | - |
| 4SDXM 8/15C | 14,6 | 2,2 | 3 | 3,12 | | 88 | - | - | - | - | - | - | - | 80 | - | - | 76 | - | 72 | 70 | 68 | 64 | 57 | 49 | 38 | - | - |
| 4SDXM 12/5C | 10,7 | 1,5 | 2 | 2,26 | | 33 | - | - | - | - | - | - | - | - | - | - | - | - | - | - | 32 | 31 | 30 | 29 | 28 | 26 | 22 | 16 |
| 4SDXM 12/7C | 14,6 | 2,2 | 3 | 3,12 | | 46 | - | - | - | - | - | - | - | - | - | - | - | - | - | - | 44 | 43 | 42 | 40 | 38 | 36 | 30 | 20 |

**P1:** Maximum power input.
**P2:** Rated motor power output.
**H:** Total head in m

# SDX

calpeda®

## Coverage chart n ≈ 2900 rpm

### Three-phase

| Model | P2 | | Q = Flow | | | | | | | | | |
|---|---|---|---|---|---|---|---|---|---|---|---|---|
| | | | m³/h | 0 | 3 | 6 | 9 | 12 | 15 | 18 | 21 | 23 |
| | | | l/min | | 50 | 100 | 150 | 200 | 250 | 300 | 350 | 383 |
| | kW | HP | H (m) = Total head | | | | | | | | | |
| 6SDX 16/1 | 0,55 | 0,75 | | 12 | 12 | 11 | 11 | 10 | 8 | 7 | 6 | 4 |
| 6SDX 16/2 | 1,1 | 1,5 | | 22 | 22 | 22 | 20 | 19 | 18 | 14 | 12 | 9 |
| 6SDX 16/3 | 2,2 | 3 | | 32 | 32 | 32 | 30 | 28 | 25 | 21 | 17 | 13 |
| 6SDX 16/4 | 2,2 | 3 | | 43 | 43 | 42 | 40 | 38 | 33 | 29 | 23 | 18 |
| 6SDX 16/5 | 3 | 4 | | 53 | 53 | 52 | 51 | 48 | 43 | 37 | 29 | 22 |
| 6SDX 16/6 | 4 | 5,5 | | 64 | 64 | 63 | 60 | 56 | 50 | 43 | 34 | 27 |
| 6SDX 16/7 | 4 | 5,5 | | 75 | 75 | 74 | 70 | 66 | 59 | 51 | 40 | 32 |
| 6SDX 16/8 | 5,5 | 7,5 | | 85 | 85 | 84 | 80 | 75 | 68 | 59 | 46 | 37 |
| 6SDX 16/9 | 5,5 | 7,5 | | 97 | 97 | 95 | 91 | 85 | 77 | 65 | 51 | 42 |
| 6SDX 16/10 | 5,5 | 7,5 | | 108 | 108 | 107 | 102 | 95 | 86 | 74 | 58 | 48 |
| 6SDX 16/11 | 7,5 | 10 | | 119 | 119 | 118 | 113 | 105 | 94 | 80 | 63 | 52 |
| 6SDX 16/12 | 7,5 | 10 | | 128 | 128 | 127 | 123 | 116 | 105 | 89 | 69 | 57 |
| 6SDX 16/13 | 7,5 | 10 | | 141 | 141 | 139 | 133 | 124 | 112 | 95 | 75 | 60 |
| 6SDX 16/14 | 9,2 | 12,5 | | 150 | 150 | 149 | 144 | 135 | 122 | 103 | 81 | 66 |
| 6SDX 16/15 | 9,2 | 12,5 | | 162 | 162 | 160 | 155 | 145 | 130 | 110 | 86 | 71 |
| 6SDX 16/16 | 9,2 | 12,5 | | 173 | 173 | 171 | 165 | 154 | 139 | 119 | 93 | 77 |
| 6SDX 16/17 | 9,2 | 12,5 | | 184 | 184 | 182 | 175 | 163 | 147 | 126 | 100 | 80 |
| 6SDX 16/18 | 9,2 | 12,5 | | 195 | 195 | 192 | 185 | 173 | 156 | 134 | 105 | 86 |
| 6SDX 16/19 | 11 | 15 | | 204 | 204 | 202 | 194 | 181 | 163 | 139 | 110 | 91 |
| 6SDX 16/20 | 11 | 15 | | 216 | 216 | 213 | 206 | 192 | 173 | 147 | 116 | 95 |
| 6SDX 16/21 | 11 | 15 | | 227 | 227 | 224 | 216 | 201 | 182 | 155 | 122 | 100 |
| 6SDX 16/22 | 13 | 17,5 | | 239 | 239 | 237 | 228 | 212 | 190 | 163 | 129 | 105 |
| 6SDX 16/23 | 13 | 17,5 | | 250 | 250 | 247 | 237 | 222 | 200 | 171 | 134 | 109 |
| 6SDX 16/24 | 13 | 17,5 | | 260 | 260 | 257 | 247 | 230 | 208 | 178 | 140 | 115 |
| 6SDX 16/25 | 15 | 20 | | 270 | 270 | 267 | 257 | 240 | 217 | 185 | 145 | 119 |
| 6SDX 16/26 | 15 | 20 | | 281 | 281 | 278 | 267 | 250 | 225 | 192 | 151 | 124 |
| 6SDX 16/27 | 15 | 20 | | 291 | 291 | 288 | 277 | 259 | 234 | 200 | 158 | 128 |
| 6SDX 16/28 | 18,5 | 25 | | 302 | 302 | 298 | 288 | 269 | 242 | 207 | 162 | 133 |
| 6SDX 16/29 | 18,5 | 25 | | 314 | 314 | 311 | 300 | 279 | 250 | 215 | 170 | 138 |
| 6SDX 16/30 | 18,5 | 25 | | 324 | 324 | 319 | 307 | 288 | 260 | 222 | 175 | 144 |
| 6SDX 16/31 | 18,5 | 25 | | 335 | 335 | 330 | 318 | 298 | 269 | 230 | 181 | 148 |
| 6SDX 16/32 | 18,5 | 25 | | 345 | 345 | 341 | 328 | 307 | 277 | 237 | 187 | 153 |
| 6SDX 16/33 | 18,5 | 25 | | 355 | 355 | 350 | 337 | 315 | 285 | 243 | 191 | 157 |

**P2:** Rated motor power output.
**H:** Total head in m

# SDX

calpeda®

## Coverage chart n ≈ 2900 rpm

### Three-phase

| Model | P2 | | Q = Flow | | | | | | | | | | | | | |
|---|---|---|---|---|---|---|---|---|---|---|---|---|---|---|---|---|
| | | | m³/h | 0 | 6 | 9 | 12 | 15 | 18 | 21 | 24 | 27 | 30 | 33 | 36 | 39 |
| | | | l/min | | 100 | 150 | 200 | 250 | 300 | 350 | 400 | 450 | 500 | 550 | 600 | 650 |
| | kW | HP | H (m) = Total head | | | | | | | | | | | | | |
| 6SDX 28/1 | 1,1 | 1,5 | | 11 | 11 | 11 | 10 | 10 | 10 | 9 | 9 | 8 | 8 | 7 | 6 | 5 |
| 6SDX 28/2 | 2,2 | 3 | | 23 | 23 | 22 | 21 | 20 | 19 | 18 | 17 | 16 | 15 | 13 | 11 | 9 |
| 6SDX 28/3 | 3 | 4 | | 33 | 33 | 32 | 31 | 30 | 29 | 28 | 26 | 24 | 22 | 20 | 17 | 14 |
| 6SDX 28/4 | 4 | 5,5 | | 44 | 43 | 42 | 41 | 40 | 38 | 36 | 34 | 31 | 28 | 26 | 23 | 19 |
| 6SDX 28/5 | 5,5 | 7,5 | | 56 | 55 | 54 | 52 | 50 | 48 | 45 | 43 | 40 | 37 | 34 | 29 | 25 |
| 6SDX 28/6 | 5,5 | 7,5 | | 68 | 67 | 64 | 62 | 60 | 58 | 56 | 52 | 49 | 45 | 40 | 36 | 30 |
| 6SDX 28/7 | 7,5 | 10 | | 79 | 77 | 76 | 74 | 71 | 68 | 65 | 61 | 56 | 52 | 46 | 40 | 34 |
| 6SDX 28/8 | 7,5 | 10 | | 90 | 88 | 87 | 84 | 81 | 78 | 73 | 68 | 64 | 58 | 53 | 46 | 38 |
| 6SDX 28/9 | 9,2 | 12,5 | | 101 | 100 | 98 | 95 | 91 | 87 | 82 | 77 | 72 | 66 | 60 | 53 | 45 |
| 6SDX 28/10 | 9,2 | 12,5 | | 112 | 110 | 108 | 105 | 101 | 97 | 92 | 86 | 81 | 74 | 67 | 58 | 50 |
| 6SDX 28/11 | 11 | 15 | | 124 | 122 | 120 | 117 | 112 | 108 | 102 | 97 | 90 | 83 | 76 | 67 | 57 |
| 6SDX 28/12 | 11 | 15 | | 134 | 132 | 130 | 126 | 121 | 116 | 110 | 104 | 97 | 89 | 81 | 71 | 61 |
| 6SDX 28/13 | 11 | 15 | | 146 | 143 | 140 | 137 | 132 | 127 | 120 | 113 | 105 | 97 | 87 | 77 | 66 |
| 6SDX 28/14 | 13 | 17,5 | | 158 | 157 | 155 | 152 | 147 | 141 | 134 | 126 | 116 | 108 | 95 | 84 | 73 |
| 6SDX 28/15 | 15 | 20 | | 170 | 168 | 166 | 162 | 157 | 150 | 142 | 134 | 124 | 113 | 102 | 90 | 77 |
| 6SDX 28/16 | 15 | 20 | | 178 | 176 | 174 | 171 | 165 | 159 | 151 | 142 | 132 | 122 | 110 | 97 | 84 |
| 6SDX 28/17 | 15 | 20 | | 190 | 188 | 185 | 180 | 173 | 167 | 158 | 148 | 138 | 127 | 116 | 103 | 88 |
| 6SDX 28/18 | 18,5 | 25 | | 199 | 198 | 194 | 189 | 182 | 174 | 165 | 155 | 143 | 130 | 119 | 106 | 90 |
| 6SDX 28/19 | 18,5 | 25 | | 210 | 208 | 205 | 199 | 192 | 182 | 172 | 161 | 150 | 137 | 125 | 110 | 94 |
| 6SDX 28/20 | 18,5 | 25 | | 222 | 220 | 216 | 210 | 202 | 197 | 182 | 170 | 157 | 144 | 129 | 114 | 97 |
| 6SDX 28/21 | 18,5 | 25 | | 232 | 230 | 226 | 220 | 212 | 202 | 190 | 177 | 164 | 149 | 134 | 117 | 100 |
| 6SDX 28/22 | 22 | 30 | | 240 | 238 | 235 | 230 | 222 | 212 | 200 | 187 | 173 | 159 | 142 | 124 | 104 |
| 6SDX 28/23 | 22 | 30 | | 250 | 248 | 245 | 239 | 231 | 221 | 209 | 196 | 182 | 167 | 150 | 131 | 110 |
| 6SDX 28/24 | 22 | 30 | | 260 | 258 | 254 | 248 | 240 | 230 | 219 | 207 | 191 | 175 | 156 | 137 | 117 |
| 6SDX 28/25 | 22 | 30 | | 278 | 276 | 272 | 265 | 256 | 245 | 233 | 219 | 203 | 187 | 166 | 145 | 122 |
| 6SDX 28/26 | 22 | 30 | | 290 | 287 | 282 | 275 | 266 | 255 | 242 | 227 | 212 | 194 | 173 | 152 | 127 |
| 6SDX 28/27 | 26 | 35 | | 302 | 298 | 293 | 286 | 277 | 265 | 253 | 238 | 221 | 202 | 181 | 157 | 132 |
| 6SDX 28/28 | 26 | 35 | | 313 | 309 | 303 | 296 | 287 | 276 | 263 | 248 | 231 | 212 | 189 | 164 | 137 |
| 6SDX 28/29 | 26 | 35 | | 325 | 319 | 314 | 307 | 298 | 287 | 273 | 257 | 240 | 220 | 196 | 170 | 143 |
| 6SDX 28/30 | 26 | 35 | | 336 | 330 | 325 | 317 | 307 | 295 | 282 | 266 | 248 | 227 | 202 | 176 | 148 |
| 6SDX 28/31 | 26 | 35 | | 347 | 340 | 335 | 327 | 317 | 305 | 291 | 275 | 256 | 234 | 209 | 183 | 154 |
| 6SDX 28/32 | 30 | 40 | | 358 | 353 | 347 | 338 | 327 | 313 | 298 | 281 | 261 | 240 | 217 | 190 | 160 |
| 6SDX 28/33 | 30 | 40 | | 367 | 362 | 356 | 347 | 336 | 322 | 307 | 289 | 270 | 248 | 223 | 196 | 166 |
| 6SDX 28/34 | 30 | 40 | | 375 | 369 | 363 | 355 | 344 | 331 | 316 | 298 | 278 | 255 | 229 | 200 | 170 |
| 6SDX 28/35 | 30 | 40 | | 388 | 382 | 377 | 368 | 358 | 346 | 329 | 311 | 290 | 267 | 240 | 211 | 180 |

**P2:** Rated motor power output.
**H:** Total head in m

# SDX

calpeda®

## Coverage chart n ≈ 2900 rpm

### Three-phase

| | | | Q = Flow | | | | | | | | | | | | |
|---|---|---|---|---|---|---|---|---|---|---|---|---|---|---|---|
| | | | m³/h | 0 | 12 | 15 | 18 | 21 | 24 | 27 | 30 | 36 | 42 | 48 | 54 | 60 |
| Model | P2 | | l/min | | 200 | 250 | 300 | 350 | 400 | 450 | 500 | 600 | 700 | 800 | 900 | 1000 |
| | kW | HP | H (m) = Total head | | | | | | | | | | | | | |
| 6SDX 45/1 | 2,2 | 3 | | 13 | 13 | 13 | 12 | 12 | 11 | 11 | 10 | 9 | 9 | 8 | 6 | 5 |
| 6SDX 45/2 | 3 | 4 | | 25 | 24 | 24 | 23 | 23 | 22 | 21 | 20 | 18 | 17 | 15 | 12 | 9 |
| 6SDX 45/3 | 5,5 | 7,5 | | 41 | 40 | 39 | 38 | 37 | 35 | 34 | 33 | 29 | 27 | 23 | 18 | 14 |
| 6SDX 45/4 | 7,5 | 10 | | 54 | 53 | 51 | 49 | 48 | 46 | 44 | 42 | 39 | 36 | 31 | 26 | 19 |
| 6SDX 45/5 | 7,5 | 10 | | 67 | 65 | 63 | 61 | 59 | 57 | 55 | 53 | 48 | 44 | 39 | 32 | 24 |
| 6SDX 45/6 | 9,2 | 12,5 | | 80 | 78 | 76 | 74 | 71 | 69 | 66 | 63 | 59 | 54 | 48 | 39 | 29 |
| 6SDX 45/7 | 11 | 15 | | 97 | 94 | 92 | 88 | 85 | 82 | 79 | 76 | 70 | 64 | 57 | 47 | 37 |
| 6SDX 45/8 | 13 | 17,5 | | 110 | 107 | 104 | 101 | 97 | 94 | 90 | 86 | 79 | 73 | 64 | 54 | 42 |
| 6SDX 45/9 | 15 | 20 | | 124 | 120 | 117 | 114 | 110 | 106 | 102 | 98 | 92 | 85 | 75 | 62 | 47 |
| 6SDX 45/10 | 15 | 20 | | 138 | 133 | 130 | 127 | 122 | 117 | 112 | 107 | 98 | 90 | 80 | 67 | 53 |
| 6SDX 45/11 | 18,5 | 25 | | 151 | 146 | 142 | 138 | 133 | 128 | 124 | 120 | 112 | 103 | 91 | 76 | 59 |
| 6SDX 45/12 | 18,5 | 25 | | 163 | 158 | 155 | 150 | 145 | 140 | 135 | 130 | 120 | 110 | 98 | 83 | 64 |
| 6SDX 45/13 | 22 | 30 | | 178 | 172 | 169 | 164 | 158 | 152 | 146 | 140 | 130 | 120 | 106 | 89 | 69 |
| 6SDX 45/14 | 22 | 30 | | 193 | 187 | 183 | 177 | 171 | 164 | 158 | 151 | 140 | 129 | 115 | 97 | 75 |
| 6SDX 45/15 | 22 | 30 | | 207 | 200 | 195 | 189 | 183 | 176 | 169 | 163 | 150 | 138 | 124 | 103 | 81 |
| 6SDX 45/16 | 26 | 35 | | 220 | 214 | 209 | 203 | 196 | 189 | 182 | 174 | 162 | 149 | 134 | 113 | 90 |
| 6SDX 45/17 | 26 | 35 | | 234 | 227 | 222 | 215 | 208 | 200 | 193 | 186 | 172 | 158 | 143 | 121 | 96 |
| 6SDX 45/18 | 30 | 40 | | 248 | 240 | 235 | 229 | 221 | 213 | 204 | 196 | 182 | 168 | 150 | 127 | 101 |
| 6SDX 45/19 | 30 | 40 | | 261 | 254 | 248 | 241 | 233 | 224 | 216 | 208 | 193 | 178 | 160 | 136 | 107 |
| 6SDX 45/20 | 30 | 40 | | 275 | 267 | 262 | 255 | 246 | 238 | 228 | 219 | 203 | 187 | 167 | 142 | 112 |
| 6SDX 45/21 | 37 | 50 | | 289 | 280 | 275 | 268 | 259 | 250 | 240 | 230 | 212 | 195 | 174 | 148 | 117 |
| 6SDX 45/22 | 37 | 50 | | 302 | 294 | 288 | 280 | 270 | 260 | 251 | 241 | 222 | 203 | 183 | 155 | 123 |
| 6SDX 45/23 | 37 | 50 | | 317 | 307 | 301 | 293 | 283 | 273 | 262 | 252 | 232 | 213 | 189 | 161 | 129 |
| 6SDX 45/24 | 37 | 50 | | 332 | 325 | 317 | 309 | 298 | 287 | 276 | 265 | 244 | 223 | 199 | 171 | 140 |

**P2:** Rated motor power output.
**H:** Total head in m

# SDX

calpeda®

## Coverage chart n ≈ 2900 rpm

### Three-phase

| | | | Q = Flow | | | | | | | | | | | | | |
|---|---|---|---|---|---|---|---|---|---|---|---|---|---|---|---|---|
| | | | m³/h | 0 | 18 | 21 | 24 | 30 | 36 | 42 | 48 | 54 | 60 | 66 | 72 | 78 |
| Model | P2 | | l/min | | 300 | 350 | 400 | 500 | 600 | 700 | 800 | 900 | 1000 | 1100 | 1200 | 1300 |
| | kW | HP | H (m) = Total head | | | | | | | | | | | | | |
| 6SDX 60/1 | 2,2 | 3 | | 14 | 13 | 13 | 12 | 11 | 10 | 8 | 7 | 6 | 5 | 4 | 2 | 1 |
| 6SDX 60/2 | 4 | 5,5 | | 28 | 26 | 25 | 24 | 22 | 20 | 18 | 16 | 14 | 13 | 11 | 8 | 5 |
| 6SDX 60/3 | 5,5 | 7,5 | | 42 | 40 | 39 | 38 | 36 | 32 | 28 | 26 | 24 | 21 | 18 | 14 | 10 |
| 6SDX 60/4 | 7,5 | 10 | | 55 | 53 | 52 | 51 | 47 | 43 | 38 | 35 | 32 | 28 | 25 | 20 | 14 |
| 6SDX 60/5 | 9,2 | 12,5 | | 69 | 67 | 66 | 64 | 60 | 55 | 50 | 46 | 42 | 38 | 33 | 27 | 19 |
| 6SDX 60/6 | 11 | 15 | | 82 | 79 | 78 | 76 | 70 | 64 | 58 | 53 | 48 | 44 | 38 | 32 | 23 |
| 6SDX 60/7 | 13 | 17,5 | | 98 | 94 | 92 | 89 | 84 | 77 | 70 | 64 | 59 | 54 | 47 | 40 | 29 |
| 6SDX 60/8 | 15 | 20 | | 110 | 106 | 104 | 101 | 94 | 87 | 80 | 73 | 67 | 60 | 53 | 44 | 33 |
| 6SDX 60/9 | 18,5 | 25 | | 126 | 122 | 118 | 116 | 108 | 99 | 91 | 83 | 76 | 69 | 61 | 51 | 38 |
| 6SDX 60/10 | 18,5 | 25 | | 140 | 135 | 132 | 128 | 120 | 111 | 102 | 95 | 87 | 78 | 68 | 57 | 45 |
| 6SDX 60/11 | 22 | 30 | | 153 | 148 | 146 | 142 | 132 | 122 | 112 | 103 | 95 | 89 | 76 | 64 | 49 |
| 6SDX 60/12 | 22 | 30 | | 166 | 162 | 157 | 153 | 143 | 133 | 122 | 112 | 103 | 94 | 89 | 68 | 53 |
| 6SDX 60/13 | 26 | 35 | | 179 | 176 | 169 | 165 | 155 | 143 | 132 | 121 | 110 | 100 | 87 | 73 | 57 |
| 6SDX 60/14 | 26 | 35 | | 195 | 188 | 184 | 180 | 168 | 156 | 142 | 130 | 120 | 109 | 96 | 80 | 63 |
| 6SDX 60/15 | 26 | 35 | | 210 | 203 | 197 | 193 | 180 | 166 | 152 | 138 | 127 | 116 | 103 | 86 | 67 |
| 6SDX 60/16 | 30 | 40 | | 222 | 216 | 211 | 206 | 193 | 178 | 162 | 148 | 135 | 123 | 108 | 98 | 72 |
| 6SDX 60/17 | 37 | 50 | | 239 | 230 | 226 | 220 | 207 | 192 | 175 | 158 | 145 | 132 | 116 | 97 | 78 |
| 6SDX 60/18 | 37 | 50 | | 252 | 243 | 238 | 233 | 218 | 202 | 185 | 170 | 155 | 141 | 123 | 107 | 83 |
| 6SDX 60/19 | 37 | 50 | | 263 | 254 | 249 | 243 | 228 | 210 | 193 | 177 | 163 | 148 | 131 | 110 | 86 |
| 6SDX 60/20 | 37 | 50 | | 278 | 267 | 263 | 256 | 239 | 220 | 201 | 184 | 168 | 153 | 136 | 115 | 90 |
| 6SDX 60/21 | 37 | 50 | | 292 | 281 | 276 | 269 | 252 | 232 | 211 | 194 | 177 | 161 | 142 | 120 | 95 |
| 6SDX 60/22 | 37 | 50 | | 306 | 295 | 289 | 282 | 264 | 243 | 221 | 202 | 184 | 167 | 147 | 125 | 99 |

**P2:** Rated motor power output.
**H:** Total head in m

# SDX

calpeda®

## Coverage chart n ≈ 2900 rpm

### Three-phase

| Model | P2 | | Q = Flow | | | | | | | | | | | |
|---|---|---|---|---|---|---|---|---|---|---|---|---|---|---|
| | | | m³/h | 0 | 9 | 20 | 30 | 40 | 50 | 60 | 70 | 80 | 90 | 100 |
| | | | l/min | | 150 | 333 | 500 | 667 | 833 | 1000 | 1170 | 1330 | 1500 | 1670 |
| | kW | HP | H (m) = Total head | | | | | | | | | | | |
| 8SDX 77/1 6SM | 4 | 5,5 | | 18,8 | 18,4 | 17,9 | 17,1 | 16,2 | 15 | 13,6 | 12,1 | 10,3 | 8,1 | 5,2 |
| 8SDX 77/2 6SM | 7.5 | 10 | | 38,1 | 37,1 | 36 | 34,6 | 32,6 | 30,2 | 27,5 | 24,6 | 21,3 | 17,1 | 11,1 |
| 8SDX 77/3 6SM | 11 | 15 | | 57,9 | 56,4 | 54,6 | 52,3 | 49,5 | 46,3 | 42,8 | 38,9 | 34,4 | 28,6 | 21 |
| 8SDX 77/4 6SM | 15 | 20 | | 76,8 | 75,5 | 73,5 | 70,6 | 66,6 | 62,2 | 57,5 | 52,4 | 46,3 | 38,4 | 28,3 |
| 8SDX 77/5 6SM | 18.5 | 25 | | 95,7 | 94,1 | 91,4 | 87,7 | 82,8 | 77,4 | 71,6 | 65,2 | 57,5 | 47,5 | 34,8 |
| 8SDX 77/6 6SM | 22 | 30 | | 115 | 114 | 110 | 106 | 99,1 | 92,5 | 85,6 | 78,1 | 69,1 | 57,4 | 42,1 |
| 8SDX 77/7 6SM | 26 | 35 | | 134 | 132 | 129 | 124 | 117 | 109 | 101 | 92,2 | 81,8 | 67,8 | 49,5 |
| 8SDX 77/8 6SM | 30 | 40 | | 153 | 151 | 147 | 141 | 133 | 125 | 115 | 105 | 92,8 | 78,1 | 56,9 |
| 8SDX 77/8 8SM | 30 | 40 | | 155 | 153 | 149 | 143 | 135 | 126 | 117 | 107 | 94,3 | 79 | 58,7 |
| 8SDX 77/9 6SM | 30 | 40 | | 171 | 168 | 164 | 157 | 148 | 138 | 127 | 116 | 102 | 84,5 | 61,2 |
| 8SDX 77/9 8SM | 30 | 40 | | 174 | 171 | 166 | 159 | 150 | 141 | 130 | 119 | 105 | 87,8 | 64,8 |
| 8SDX 77/10 6SM | 37 | 50 | | 191 | 188 | 182 | 175 | 165 | 154 | 142 | 130 | 115 | 94,7 | 68,7 |
| 8SDX 77/10 8SM | 37 | 50 | | 194 | 191 | 186 | 178 | 169 | 158 | 147 | 134 | 120 | 101 | 75,1 |
| 8SDX 77/11 6SM | 37 | 50 | | 209 | 206 | 199 | 191 | 180 | 168 | 155 | 141 | 124 | 102 | 73,8 |
| 8SDX 77/11 8SM | 37 | 50 | | 213 | 210 | 204 | 196 | 185 | 173 | 160 | 146 | 130 | 109 | 80,5 |
| 8SDX 77/12 6SM | 45 | 60 | | 229 | 226 | 219 | 210 | 198 | 185 | 171 | 156 | 137 | 114 | 82,3 |
| 8SDX 77/12 8SM | 45 | 60 | | 233 | 230 | 224 | 214 | 202 | 189 | 175 | 160 | 143 | 120 | 89 |
| 8SDX 77/13 8SM | 51 | 70 | | 253 | 250 | 243 | 234 | 221 | 207 | 192 | 175 | 156 | 131 | 97,5 |
| 8SDX 77/14 8SM | 51 | 70 | | 272 | 268 | 261 | 250 | 236 | 221 | 204 | 187 | 167 | 140 | 105 |
| 8SDX 77/15 8SM | 51 | 70 | | 290 | 287 | 278 | 266 | 252 | 236 | 218 | 199 | 177 | 149 | 111 |
| 8SDX 77/16 8SM | 59 | 80 | | 311 | 308 | 299 | 287 | 271 | 254 | 236 | 216 | 192 | 162 | 121 |
| 8SDX 77/17 8SM | 59 | 80 | | 330 | 325 | 315 | 302 | 287 | 269 | 249 | 228 | 202 | 170 | 127 |
| 8SDX 77/18 8SM | 66 | 90 | | 350 | 345 | 335 | 321 | 303 | 284 | 263 | 240 | 214 | 179 | 133 |
| 8SDX 77/19 8SM | 75 | 100 | | 369 | 364 | 353 | 339 | 321 | 301 | 279 | 254 | 225 | 188 | 140 |
| 8SDX 77/20 8SM | 75 | 100 | | 387 | 382 | 371 | 356 | 336 | 314 | 291 | 266 | 236 | 198 | 147 |

**P2:** Rated motor power output.
**H:** Total head in m

# SDX

calpeda®

## Coverage chart n ≈ 2900 rpm

### Three-phase

| | | | Q = Flow | | | | | | | | | | | |
|---|---|---|---|---|---|---|---|---|---|---|---|---|---|---|
| | | | m³/h | 0 | 32,4 | 40 | 50 | 60 | 70 | 80 | 90 | 100 | 110 | 120 |
| Model | P2 | | l/min | | 540 | 667 | 833 | 1000 | 1170 | 1330 | 1500 | 1670 | 1830 | 2000 |
| | kW | HP | H (m) = Total head | | | | | | | | | | | |
| 8SDX 95/1 6SM | 5.5 | 7.5 | | 20,9 | 18,9 | 18,1 | 16,9 | 15,6 | 14,3 | 13,1 | 11,7 | 10 | 7,8 | 5,1 |
| 8SDX 95/2 6SM | 9,2 | 12,5 | | 42,1 | 38,6 | 36,8 | 34,2 | 31,5 | 28,9 | 26,4 | 23,7 | 20,3 | 15,9 | 10,3 |
| 8SDX 95/3 6SM | 13 | 17,5 | | 62,7 | 58,3 | 55,6 | 51,5 | 47,3 | 43,6 | 40,1 | 36,4 | 31,7 | 25,4 | 17,5 |
| 8SDX 95/4 6SM | 18.5 | 25 | | 85,1 | 78,1 | 74,4 | 69,2 | 64,3 | 60,2 | 56,6 | 52,5 | 46,5 | 37,9 | 27,4 |
| 8SDX 95/5 6SM | 22 | 30 | | 106 | 96,9 | 92,4 | 85,9 | 79,8 | 74,8 | 70,3 | 65,2 | 57,9 | 47,2 | 34 |
| 8SDX 95/6 6SM | 26 | 35 | | 127 | 117 | 112 | 104 | 96,4 | 90,3 | 84,9 | 78,7 | 69,7 | 56,8 | 41,1 |
| 8SDX 95/7 6SM | 30 | 40 | | 148 | 136 | 130 | 121 | 113 | 105 | 98,5 | 91 | 80,4 | 65,4 | 47 |
| 8SDX 95/7 8SM | 30 | 40 | | 150 | 138 | 132 | 123 | 114 | 107 | 101 | 92,9 | 82,7 | 68 | 49,9 |
| 8SDX 95/8 6SM | 37 | 50 | | 169 | 155 | 148 | 138 | 128 | 120 | 112 | 104 | 91,8 | 74,6 | 53,7 |
| 8SDX 95/8 8SM | 37 | 50 | | 173 | 159 | 152 | 142 | 132 | 124 | 116 | 108 | 96,2 | 79,5 | 58,7 |
| 8SDX 95/9 6SM | 45 | 60 | | 189 | 175 | 167 | 156 | 145 | 136 | 127 | 118 | 104 | 84,2 | 60,9 |
| 8SDX 95/9 8SM | 45 | 60 | | 194 | 179 | 171 | 160 | 149 | 139 | 131 | 122 | 110 | 90,4 | 66,8 |
| 8SDX 95/10 6SM | 45 | 60 | | 210 | 193 | 184 | 171 | 159 | 149 | 140 | 129 | 114 | 91,9 | 66 |
| 8SDX 95/10 8SM | 45 | 60 | | 215 | 198 | 189 | 176 | 164 | 154 | 145 | 134 | 119 | 97,4 | 71,3 |
| 8SDX 95/11 8SM | 51 | 70 | | 237 | 219 | 209 | 195 | 182 | 170 | 160 | 149 | 133 | 111 | 81,1 |
| 8SDX 95/12 8SM | 59 | 80 | | 260 | 240 | 229 | 213 | 198 | 186 | 175 | 163 | 147 | 122 | 90,2 |
| 8SDX 95/13 8SM | 59 | 80 | | 282 | 259 | 247 | 231 | 215 | 201 | 190 | 176 | 158 | 131 | 95,9 |
| 8SDX 95/14 8SM | 66 | 90 | | 302 | 278 | 265 | 247 | 230 | 215 | 203 | 189 | 170 | 141 | 104 |
| 8SDX 95/15 8SM | 66 | 90 | | 324 | 296 | 283 | 264 | 245 | 230 | 216 | 201 | 179 | 147 | 108 |
| 8SDX 95/16 8SM | 75 | 100 | | 344 | 316 | 302 | 282 | 262 | 246 | 231 | 214 | 190 | 156 | 114 |
| 8SDX 95/17 8SM | 75 | 100 | | 365 | 335 | 319 | 297 | 276 | 259 | 243 | 226 | 201 | 165 | 120 |
| 8SDX 95/20 8SM | 92 | 125 | | 430 | 395 | 377 | 350 | 326 | 305 | 288 | 269 | 240 | 198 | 145 |

**P2:** Rated motor power output.
**H:** Total head in m

# SDX

calpeda®

## Coverage chart n ≈ 2900 rpm

| Model | P2 | | Q = Flow | | | | | | | | | |
|---|---|---|---|---|---|---|---|---|---|---|---|---|
| | | | m³/h | 0 | 8 | 10 | 12 | 15 | 18 | 21 | 24 | 27 |
| | | | l/min | | 133 | 167 | 200 | 250 | 300 | 350 | 400 | 450 |
| | kW | HP | H (m) = Total head | | | | | | | | | |
| 6SDXL 18/6 | 4 | 5,5 | | 70 | 66,4 | 64 | 62 | 57,6 | 51,6 | 43,2 | 32,9 | 20,5 |
| 6SDXL 18/7 | 5,5 | 7,5 | | 81,7 | 77,5 | 74,7 | 72,3 | 67,2 | 60,2 | 50,4 | 38,4 | 23,9 |
| 6SDXL 18/8 | 5,5 | 7,5 | | 93,3 | 88,5 | 85,3 | 82,7 | 76,8 | 68,8 | 57,6 | 43,9 | 27,4 |
| 6SDXL 18/9 | 5,5 | 7,5 | | 105 | 99,6 | 96 | 93 | 86,4 | 77,4 | 64,8 | 49,4 | 30,8 |
| 6SDXL 18/10 | 7,5 | 10 | | 117 | 111 | 107 | 103 | 96 | 86 | 72 | 54,9 | 34,2 |
| 6SDXL 18/11 | 7,5 | 10 | | 128 | 122 | 117 | 114 | 106 | 94,6 | 79,2 | 60,4 | 37,6 |
| 6SDXL 18/12 | 7,5 | 10 | | 140 | 133 | 128 | 124 | 115 | 103 | 86,4 | 65,8 | 41 |
| 6SDXL 18/13 | 9,2 | 12,5 | | 152 | 144 | 139 | 134 | 125 | 112 | 93,6 | 71,3 | 44,5 |
| 6SDXL 18/14 | 9,2 | 12,5 | | 163 | 155 | 149 | 145 | 134 | 120 | 101 | 76,8 | 47,9 |
| 6SDXL 18/15 | 9,2 | 12,5 | | 175 | 166 | 160 | 155 | 144 | 129 | 108 | 82,3 | 51,3 |
| 6SDXL 18/16 | 11 | 15 | | 187 | 177 | 171 | 165 | 154 | 138 | 115 | 87,8 | 54,7 |
| 6SDXL 18/17 | 11 | 15 | | 198 | 188 | 181 | 176 | 163 | 146 | 122 | 93,3 | 58,1 |
| 6SDXL 18/18 | 11 | 15 | | 210 | 199 | 192 | 186 | 173 | 155 | 130 | 98,8 | 61,6 |
| 6SDXL 18/19 | 13 | 17,5 | | 222 | 210 | 203 | 196 | 182 | 163 | 137 | 104 | 65 |
| 6SDXL 18/20 | 13 | 17,5 | | 233 | 221 | 213 | 207 | 192 | 172 | 144 | 110 | 68,4 |
| 6SDXL 18/21 | 13 | 17,5 | | 245 | 232 | 224 | 217 | 202 | 181 | 151 | 115 | 71,8 |
| 6SDXL 18/22 | 15 | 20 | | 257 | 243 | 235 | 227 | 211 | 189 | 158 | 121 | 75,2 |
| 6SDXL 18/23 | 15 | 20 | | 268 | 254 | 245 | 238 | 221 | 198 | 166 | 126 | 78,7 |
| 6SDXL 18/24 | 15 | 20 | | 280 | 266 | 256 | 248 | 230 | 206 | 173 | 132 | 82,1 |
| 6SDXL 18/25 | 18,5 | 25 | | 292 | 277 | 267 | 258 | 240 | 215 | 180 | 137 | 85,5 |
| 6SDXL 18/26 | 18,5 | 25 | | 303 | 288 | 277 | 269 | 250 | 224 | 187 | 143 | 88,9 |
| 6SDXL 18/27 | 18,5 | 25 | | 315 | 299 | 288 | 279 | 259 | 232 | 194 | 148 | 92,3 |
| 6SDXL 18/28 | 18,5 | 25 | | 327 | 310 | 299 | 289 | 269 | 241 | 202 | 154 | 95,8 |
| 6SDXL 18/29 | 18,5 | 25 | | 338 | 321 | 309 | 300 | 278 | 249 | 209 | 159 | 99,2 |
| 6SDXL 18/30 | 18,5 | 25 | | 350 | 332 | 320 | 310 | 288 | 258 | 216 | 165 | 103 |
| 6SDXL 18/31 | 22 | 30 | | 362 | 343 | 331 | 320 | 298 | 267 | 223 | 170 | 106 |
| 6SDXL 18/32 | 22 | 30 | | 373 | 354 | 342 | 331 | 307 | 275 | 230 | 176 | 109 |
| 6SDXL 18/33 | 22 | 30 | | 385 | 365 | 352 | 341 | 317 | 284 | 238 | 181 | 113 |
| 6SDXL 18/34 | 22 | 30 | | 397 | 376 | 363 | 351 | 326 | 292 | 245 | 187 | 116 |
| 6SDXL 18/35 | 22 | 30 | | 408 | 387 | 373 | 362 | 336 | 301 | 252 | 192 | 120 |
| 6SDXL 18/36 | 22 | 30 | | 420 | 443 | 427 | 413 | 384 | 344 | 288 | 220 | 137 |
| 6SDXL 18/37 | 26 | 35 | | 432 | 409 | 395 | 382 | 355 | 318 | 266 | 203 | 127 |
| 6SDXL 18/38 | 26 | 35 | | 443 | 420 | 405 | 393 | 365 | 327 | 274 | 209 | 130 |
| 6SDXL 18/39 | 26 | 35 | | 455 | 432 | 416 | 403 | 374 | 335 | 281 | 214 | 133 |
| 6SDXL 18/40 | 30 | 40 | | 467 | 443 | 427 | 413 | 384 | 344 | 288 | 220 | 137 |
| 6SDXL 18/41 | 26 | 35 | | 478 | 454 | 437 | 424 | 394 | 353 | 295 | 225 | 140 |
| 6SDXL 18/42 | 26 | 35 | | 490 | 465 | 448 | 434 | 403 | 361 | 302 | 230 | 144 |
| 6SDXL 18/43 | 30 | 40 | | 502 | 476 | 459 | 444 | 413 | 370 | 310 | 236 | 147 |
| 6SDXL 18/44 | 30 | 40 | | 513 | 487 | 469 | 455 | 422 | 378 | 317 | 241 | 151 |
| 6SDXL 18/45 | 30 | 40 | | 525 | 498 | 480 | 465 | 432 | 387 | 324 | 247 | 154 |
| 6SDXL 18/46 | 30 | 40 | | 537 | 509 | 491 | 475 | 442 | 396 | 331 | 252 | 157 |
| 6SDXL 18/47 | 30 | 40 | | 548 | 520 | 501 | 486 | 451 | 404 | 338 | 258 | 161 |
| 6SDXL 18/48 | 30 | 40 | | 560 | 531 | 512 | 496 | 461 | 413 | 346 | 263 | 164 |
| 6SDXL 18/49 | 30 | 40 | | 572 | 542 | 523 | 506 | 470 | 421 | 353 | 269 | 168 |
| 6SDXL 18/50 | 37 | 50 | | 583 | 553 | 533 | 517 | 480 | 430 | 360 | 274 | 171 |
| 6SDXL 18/51 | 37 | 50 | | 595 | 564 | 544 | 527 | 490 | 439 | 367 | 280 | 174 |
| 6SDXL 18/52 | 37 | 50 | | 607 | 575 | 555 | 537 | 499 | 447 | 374 | 285 | 178 |
| 6SDXL 18/53 | 37 | 50 | | 618 | 586 | 565 | 548 | 509 | 456 | 382 | 291 | 181 |
| 6SDXL 18/54 | 37 | 50 | | 630 | 598 | 576 | 558 | 518 | 464 | 389 | 296 | 185 |
| 6SDXL 18/55 | 37 | 50 | | 642 | 609 | 587 | 568 | 528 | 473 | 396 | 302 | 188 |
| 6SDXL 18/56 | 37 | 50 | | 653 | 620 | 597 | 579 | 538 | 482 | 403 | 307 | 192 |
| 6SDXL 18/57 | 37 | 50 | | 665 | 631 | 608 | 589 | 547 | 490 | 410 | 313 | 195 |
| 6SDXL 18/58 | 37 | 50 | | 677 | 642 | 619 | 599 | 557 | 499 | 418 | 318 | 198 |
| 6SDXL 18/59 | 37 | 50 | | 688 | 653 | 629 | 610 | 566 | 507 | 452 | 324 | 202 |
| 6SDXL 18/60 | 37 | 50 | | 700 | 664 | 640 | 620 | 576 | 516 | 432 | 329 | 205 |

**P2:** Rated motor power output.
**H:** Total head in m

# SDX

calpeda®

## Coverage chart n ≈ 2900 rpm

### Three-phase

| | | | Q = Flow | | | | | | | | |
|---|---|---|---|---|---|---|---|---|---|---|---|
| | | | m³/h | 0 | 15 | 20 | 25 | 30 | 35 | 40 | 45 |
| Model | P2 | | l/min | | 250 | 333 | 417 | 500 | 583 | 667 | 750 |
| | kW | HP | H (m) = Total head | | | | | | | | |
| 6SDXL 30/3 | 4 | 5,5 | | 46,3 | 38,9 | 36 | 33,3 | 30,2 | 26,7 | 21,7 | 15,3 |
| 6SDXL 30/4 | 5,5 | 7,5 | | 62,5 | 52,6 | 48,8 | 45,2 | 41,1 | 36,5 | 30 | 21,4 |
| 6SDXL 30/5 | 7,5 | 10 | | 78,6 | 66,2 | 61,5 | 56,9 | 51,8 | 46,1 | 38 | 27,4 |
| 6SDXL 30/6 | 7,5 | 10 | | 93,1 | 78,4 | 72,6 | 67,1 | 61 | 54 | 44,1 | 31,2 |
| 6SDXL 30/7 | 9,2 | 12,5 | | 110 | 92,6 | 86 | 79,7 | 72,6 | 64,6 | 53,3 | 38,4 |
| 6SDXL 30/8 | 11 | 15 | | 125 | 106 | 98,1 | 90,9 | 82,7 | 73,6 | 60,5 | 43,5 |
| 6SDXL 30/9 | 11 | 15 | | 140 | 118 | 109 | 101 | 91,8 | 81,4 | 66,6 | 47,3 |
| 6SDXL 30/10 | 13 | 17,5 | | 158 | 133 | 124 | 115 | 105 | 93,5 | 77,3 | 56,1 |
| 6SDXL 30/11 | 15 | 20 | | 173 | 146 | 135 | 125 | 114 | 102 | 83,8 | 60,4 |
| 6SDXL 30/12 | 15 | 20 | | 188 | 158 | 147 | 136 | 123 | 110 | 90 | 64,4 |
| 6SDXL 30/13 | 18,5 | 25 | | 205 | 173 | 161 | 149 | 136 | 121 | 100 | 72,4 |
| 6SDXL 30/14 | 18,5 | 25 | | 220 | 185 | 172 | 159 | 145 | 129 | 106 | 76,7 |
| 6SDXL 30/15 | 22 | 30 | | 237 | 200 | 185 | 172 | 157 | 140 | 116 | 84 |
| 6SDXL 30/16 | 22 | 30 | | 252 | 212 | 197 | 183 | 166 | 148 | 122 | 88,3 |
| 6SDXL 30/17 | 22 | 30 | | 267 | 224 | 208 | 193 | 176 | 156 | 129 | 92,5 |
| 6SDXL 30/18 | 22 | 30 | | 281 | 237 | 220 | 203 | 185 | 164 | 135 | 96,5 |
| 6SDXL 30/19 | 26 | 35 | | 302 | 255 | 237 | 220 | 201 | 180 | 149 | 109 |
| 6SDXL 30/20 | 26 | 35 | | 317 | 267 | 249 | 231 | 210 | 188 | 156 | 114 |
| 6SDXL 30/21 | 26 | 35 | | 332 | 280 | 260 | 241 | 220 | 197 | 163 | 118 |
| 6SDXL 30/22 | 30 | 40 | | 347 | 293 | 272 | 252 | 230 | 205 | 169 | 123 |
| 6SDXL 30/23 | 30 | 40 | | 362 | 305 | 283 | 263 | 239 | 213 | 176 | 127 |
| 6SDXL 30/24 | 30 | 40 | | 377 | 317 | 295 | 273 | 249 | 221 | 182 | 131 |
| 6SDXL 30/25 | 37 | 50 | | 395 | 333 | 309 | 287 | 261 | 233 | 193 | 140 |
| 6SDXL 30/26 | 37 | 50 | | 410 | 345 | 321 | 297 | 271 | 242 | 200 | 144 |
| 6SDXL 30/27 | 37 | 50 | | 425 | 358 | 332 | 308 | 280 | 250 | 206 | 149 |
| 6SDXL 30/28 | 37 | 50 | | 440 | 370 | 344 | 318 | 290 | 258 | 212 | 153 |
| 6SDXL 30/29 | 37 | 50 | | 454 | 383 | 355 | 329 | 299 | 266 | 219 | 157 |
| 6SDXL 30/30 | 37 | 50 | | 469 | 395 | 366 | 339 | 308 | 274 | 225 | 161 |
| 6SDXL 30/31 | 45 | 60 | | 490 | 413 | 384 | 356 | 324 | 289 | 239 | 174 |
| 6SDXL 30/32 | 45 | 60 | | 505 | 425 | 395 | 366 | 334 | 298 | 246 | 178 |
| 6SDXL 30/33 | 45 | 60 | | 520 | 438 | 407 | 377 | 343 | 306 | 252 | 182 |
| 6SDXL 30/34 | 45 | 60 | | 535 | 450 | 418 | 387 | 353 | 314 | 259 | 186 |
| 6SDXL 30/35 | 45 | 60 | | 549 | 463 | 429 | 398 | 362 | 322 | 265 | 190 |
| 6SDXL 30/36 | 45 | 60 | | 564 | 475 | 441 | 408 | 371 | 330 | 271 | 194 |
| 6SDXL 30/37 | 45 | 60 | | 579 | 487 | 452 | 418 | 380 | 338 | 277 | 198 |
| 6SDXL 30/38 | 51 | 70 | | 613 | 517 | 482 | 448 | 410 | 369 | 309 | 229 |
| 6SDXL 30/39 | 51 | 70 | | 628 | 530 | 494 | 459 | 420 | 378 | 316 | 234 |
| 6SDXL 30/40 | 51 | 70 | | 644 | 543 | 506 | 471 | 430 | 387 | 323 | 240 |
| 6SDXL 30/41 | 51 | 70 | | 659 | 557 | 518 | 482 | 440 | 396 | 330 | 245 |
| 6SDXL 30/42 | 55 | 75 | | 675 | 569 | 530 | 493 | 450 | 404 | 338 | 250 |
| 6SDXL 30/43 | 55 | 75 | | 690 | 582 | 542 | 504 | 460 | 413 | 345 | 255 |

**P2:** Rated motor power output.
**H:** Total head in m

# SDX

calpeda®

## Coverage chart n ≈ 2900 rpm

| Model | P2 | | Q = Flow | | | | | | | | | |
|---|---|---|---|---|---|---|---|---|---|---|---|---|
| | | | m³/h | 0 | 25 | 30 | 35 | 40 | 45 | 50 | 55 | 60 |
| | | | l/min | | 417 | 500 | 583 | 667 | 750 | 833 | 917 | 1000 |
| | kW | HP | H (m) = Total head | | | | | | | | | |
| 6SDXL 46/2 | 3 | 4 | | 26,4 | 22,6 | 20,9 | 19,3 | 17,8 | 16,6 | 15,1 | 13,4 | 11,3 |
| 6SDXL 46/3 | 4 | 5,5 | | 39,4 | 33,8 | 31,2 | 28,8 | 26,6 | 24,7 | 22,5 | 19,9 | 16,8 |
| 6SDXL 46/4 | 5,5 | 7,5 | | 52,5 | 45 | 41,5 | 38,3 | 35,5 | 32,9 | 29,9 | 26,5 | 22,3 |
| 6SDXL 46/5 | 7,5 | 10 | | 66,1 | 56,8 | 52,3 | 48,3 | 44,7 | 41,5 | 37,8 | 33,6 | 28,4 |
| 6SDXL 46/6 | 9,2 | 12,5 | | 80,7 | 70 | 65,2 | 60,4 | 55,5 | 50,3 | 46 | 41,6 | 35,7 |
| 6SDXL 46/7 | 9,2 | 12,5 | | 93,1 | 80,4 | 74,8 | 69,3 | 63,5 | 57,6 | 52,7 | 47,5 | 40,5 |
| 6SDXL 46/8 | 11 | 15 | | 106 | 91,6 | 85,1 | 78,9 | 72,2 | 65,5 | 59,9 | 54 | 46 |
| 6SDXL 46/9 | 13 | 17,5 | | 121 | 105 | 98,2 | 91 | 83,7 | 75,9 | 69,5 | 62,9 | 54,1 |
| 6SDXL 46/10 | 13 | 17,5 | | 134 | 116 | 108 | 100 | 91,9 | 83,3 | 76,2 | 68,9 | 59 |
| 6SDXL 46/11 | 15 | 20 | | 146 | 126 | 118 | 109 | 99,9 | 90,5 | 82,8 | 74,7 | 63,7 |
| 6SDXL 46/12 | 18,5 | 25 | | 161 | 140 | 130 | 12 | 111 | 101 | 92 | 83,3 | 71,4 |
| 6SDXL 46/13 | 18,5 | 25 | | 174 | 150 | 140 | 130 | 119 | 108 | 98,7 | 89,2 | 76,3 |
| 6SDXL 46/14 | 18,5 | 25 | | 186 | 161 | 149 | 139 | 127 | 115 | 105 | 95 | 81 |
| 6SDXL 46/15 | 22 | 30 | | 201 | 174 | 162 | 150 | 138 | 125 | 114 | 103 | 88,4 |
| 6SDXL 46/16 | 22 | 30 | | 213 | 184 | 171 | 159 | 146 | 132 | 121 | 109 | 93,2 |
| 6SDXL 46/17 | 22 | 30 | | 225 | 195 | 181 | 168 | 154 | 139 | 127 | 115 | 97,8 |
| 6SDXL 46/18 | 26 | 35 | | 244 | 212 | 198 | 183 | 169 | 153 | 140 | 127 | 109 |
| 6SDXL 46/19 | 26 | 35 | | 257 | 223 | 208 | 192 | 177 | 160 | 147 | 133 | 114 |
| 6SDXL 46/20 | 30 | 40 | | 269 | 234 | 218 | 208 | 185 | 168 | 154 | 139 | 119 |
| 6SDXL 46/21 | 30 | 40 | | 282 | 244 | 227 | 211 | 193 | 175 | 160 | 145 | 124 |
| 6SDXL 46/22 | 30 | 40 | | 294 | 255 | 237 | 220 | 202 | 183 | 167 | 151 | 129 |
| 6SDXL 46/23 | 30 | 40 | | 307 | 265 | 247 | 229 | 209 | 190 | 174 | 157 | 134 |
| 6SDXL 46/24 | 37 | 50 | | 322 | 280 | 260 | 241 | 222 | 201 | 184 | 166 | 143 |
| 6SDXL 46/25 | 37 | 50 | | 335 | 290 | 270 | 250 | 230 | 208 | 191 | 172 | 147 |
| 6SDXL 46/26 | 37 | 50 | | 347 | 301 | 280 | 259 | 238 | 216 | 197 | 178 | 152 |
| 6SDXL 46/27 | 37 | 50 | | 360 | 311 | 289 | 268 | 246 | 223 | 204 | 184 | 157 |
| 6SDXL 46/28 | 37 | 50 | | 372 | 321 | 299 | 277 | 254 | 230 | 210 | 190 | 162 |
| 6SDXL 46/29 | 45 | 60 | | 390 | 339 | 315 | 292 | 268 | 243 | 223 | 201 | 173 |
| 6SDXL 46/30 | 45 | 60 | | 403 | 349 | 325 | 301 | 276 | 251 | 229 | 207 | 178 |
| 6SDXL 46/31 | 45 | 60 | | 415 | 360 | 334 | 310 | 284 | 258 | 236 | 213 | 183 |
| 6SDXL 46/32 | 45 | 60 | | 427 | 370 | 344 | 319 | 292 | 265 | 243 | 219 | 187 |
| 6SDXL 46/33 | 45 | 60 | | 440 | 380 | 353 | 328 | 300 | 272 | 249 | 225 | 192 |
| 6SDXL 46/34 | 51 | 70 | | 469 | 411 | 383 | 355 | 328 | 298 | 272 | 248 | 216 |
| 6SDXL 46/35 | 51 | 70 | | 482 | 422 | 394 | 365 | 337 | 306 | 279 | 255 | 221 |
| 6SDXL 46/36 | 51 | 70 | | 496 | 434 | 404 | 374 | 346 | 314 | 287 | 261 | 227 |
| 6SDXL 46/37 | 51 | 70 | | 509 | 445 | 415 | 384 | 355 | 322 | 294 | 268 | 233 |
| 6SDXL 46/38 | 55 | 75 | | 522 | 456 | 425 | 394 | 364 | 330 | 302 | 275 | 238 |
| 6SDXL 46/39 | 55 | 75 | | 535 | 467 | 436 | 403 | 372 | 338 | 309 | 281 | 244 |
| 6SDXL 46/40 | 55 | 75 | | 548 | 479 | 446 | 413 | 381 | 346 | 316 | 288 | 249 |

**P2:** Rated motor power output.
**H:** Total head in m

# SDX

calpeda®

## Coverage chart n ≈ 2900 rpm

| Model | P2 | | Q = Flow | | | | | | | | | | | |
|---|---|---|---|---|---|---|---|---|---|---|---|---|---|---|
| | | | m³/h | 0 | 35 | 40 | 45 | 50 | 55 | 60 | 65 | 70 | 75 | 80 |
| | | | l/min | | 583 | 667 | 750 | 833 | 917 | 1000 | 1083 | 1167 | 1250 | 1333 |
| | kW | HP | H (m) = Total head | | | | | | | | | | | |
| 6SDXL 65/2 | 4 | 5,5 | | 26,8 | 21,1 | 19 | 17,3 | 16,5 | 15,7 | 14,9 | 13,9 | 12,4 | 10,5 | 8,2 |
| 6SDXL 65/3 | 5,5 | 7,5 | | 40,4 | 31,8 | 28,8 | 26,2 | 24,9 | 23,7 | 22,5 | 21 | 18,9 | 16 | 12,6 |
| 6SDXL 65/4 | 7,5 | 10 | | 54 | 42,5 | 38,4 | 35 | 33,2 | 31,6 | 30,1 | 28 | 25,2 | 21,4 | 16,9 |
| 6SDXL 65/5 | 9,2 | 12,5 | | 68 | 53,8 | 48,7 | 44,3 | 41,9 | 40,1 | 38,2 | 35,6 | 32,2 | 27,5 | 22 |
| 6SDXL 65/6 | 11 | 15 | | 81,2 | 64 | 57,9 | 52,7 | 50 | 47,7 | 45,3 | 42,3 | 38,1 | 32,3 | 25,7 |
| 6SDXL 65/7 | 13 | 17,5 | | 94,9 | 76,2 | 70,1 | 65,2 | 61,7 | 58,6 | 55,7 | 52,1 | 46,1 | 39,7 | 33,4 |
| 6SDXL 65/8 | 15 | 20 | | 108 | 86 | 79,1 | 73,5 | 69,7 | 66,1 | 62,8 | 58,5 | 51,6 | 44,3 | 37 |
| 6SDXL 65/9 | 15 | 20 | | 120 | 95,5 | 87,8 | 81,5 | 77,4 | 73,4 | 69,6 | 64,6 | 56,8 | 48,6 | 40,2 |
| 6SDXL 65/10 | 18,5 | 25 | | 134 | 108 | 99 | 91,9 | 87,2 | 82,7 | 78,5 | 73,2 | 64,6 | 55,5 | 46,3 |
| 6SDXL 65/11 | 18,5 | 25 | | 147 | 117 | 108 | 100 | 95 | 90 | 85,4 | 79,4 | 69,8 | 59,9 | 49,6 |
| 6SDXL 65/12 | 22 | 30 | | 161 | 129 | 118 | 110 | 104 | 99,1 | 94,1 | 87,6 | 77,3 | 66,3 | 55,3 |
| 6SDXL 65/13 | 22 | 30 | | 174 | 138 | 127 | 118 | 112 | 106 | 101 | 93,8 | 82,5 | 70,8 | 58,6 |
| 6SDXL 65/14 | 26 | 35 | | 190 | 153 | 141 | 131 | 124 | 118 | 112 | 105 | 93 | 80,2 | 67,7 |
| 6SDXL 65/15 | 26 | 35 | | 203 | 163 | 150 | 140 | 132 | 126 | 119 | 111 | 98,7 | 85 | 71,5 |
| 6SDXL 65/16 | 30 | 40 | | 216 | 173 | 159 | 148 | 140 | 133 | 126 | 118 | 104 | 89,7 | 75,2 |
| 6SDXL 65/17 | 30 | 40 | | 229 | 183 | 168 | 156 | 148 | 141 | 133 | 124 | 110 | 94,3 | 78,8 |
| 6SDXL 65/18 | 37 | 50 | | 243 | 195 | 180 | 167 | 158 | 150 | 143 | 133 | 118 | 101 | 85,2 |
| 6SDXL 65/19 | 37 | 50 | | 256 | 205 | 189 | 175 | 166 | 158 | 150 | 140 | 123 | 106 | 88,9 |
| 6SDX6 65/20 | 37 | 50 | | 269 | 215 | 198 | 184 | 174 | 165 | 157 | 146 | 129 | 111 | 92,4 |
| 6SDXL 65/21 | 37 | 50 | | 281 | 225 | 206 | 192 | 182 | 173 | 164 | 152 | 134 | 115 | 95,7 |
| 6SDXL 65/22 | 45 | 60 | | 298 | 239 | 220 | 204 | 194 | 184 | 175 | 163 | 144 | 124 | 104 |
| 6SDXL 65/23 | 45 | 60 | | 310 | 249 | 229 | 213 | 202 | 191 | 182 | 170 | 150 | 129 | 108 |
| 6SDXL 65/24 | 45 | 60 | | 323 | 259 | 238 | 221 | 209 | 199 | 189 | 176 | 155 | 133 | 111 |
| 6SDXL 65/25 | 45 | 60 | | 336 | 268 | 247 | 229 | 217 | 206 | 196 | 182 | 161 | 138 | 115 |
| 6SDXL 65/26 | 45 | 60 | | 348 | 278 | 255 | 237 | 225 | 213 | 202 | 188 | 166 | 142 | 118 |
| 6SDXL 65/27 | 51 | 70 | | 373 | 303 | 279 | 259 | 245 | 233 | 222 | 208 | 186 | 162 | 137 |
| 6SDXL 65/28 | 51 | 70 | | 386 | 313 | 288 | 268 | 253 | 241 | 229 | 216 | 193 | 167 | 142 |
| 6SDXL 65/29 | 51 | 70 | | 399 | 324 | 298 | 277 | 262 | 249 | 237 | 223 | 199 | 172 | 146 |
| 6SDXL 65/30 | 55 | 75 | | 413 | 334 | 308 | 286 | 270 | 258 | 245 | 230 | 205 | 177 | 151 |
| 6SDXL 65/31 | 55 | 75 | | 426 | 345 | 317 | 295 | 279 | 265 | 252 | 237 | 211 | 183 | 155 |

**P2:** Rated motor power output.
**H:** Total head in m

# SDX

calpeda®

## Coverage chart n ≈ 2900 rpm

| Model | P2 | | Q = Flow | | | | | | | | | |
|---|---|---|---|---|---|---|---|---|---|---|---|---|
| | | | m³/h | 0 | 30 | 40 | 50 | 60 | 70 | 80 | 90 | 100 |
| | | | l/min | | 500 | 667 | 833 | 1000 | 1167 | 1333 | 1500 | 1667 |
| | kW | HP | H (m) = Total head | | | | | | | | | |
| 8SDXL 78/2 | 7,5 | 10 | | 39,9 | 37,1 | 34,9 | 32,6 | 29,7 | 27,1 | 24,3 | 20,4 | 16,3 |
| 8SDXL 78/3 | 11 | 15 | | 59,8 | 55,7 | 52,3 | 48,9 | 44,6 | 40,7 | 36,4 | 30,6 | 24,4 |
| 8SDXL 78/4 | 15 | 20 | | 79,7 | 74,3 | 69,7 | 65,1 | 59,4 | 54,3 | 48,6 | 40,9 | 32,6 |
| 8SDXL 78/5 | 18,5 | 25 | | 99,6 | 92,9 | 87,1 | 81,4 | 74,3 | 67,9 | 60,7 | 51,1 | 40,7 |
| 8SDXL 78/6 | 22 | 30 | | 120 | 111 | 105 | 97,7 | 89,1 | 81,4 | 72,9 | 61,3 | 48,9 |
| 8SDXL 78/7 | 26 | 35 | | 140 | 130 | 122 | 114 | 104 | 95 | 85 | 71,5 | 57 |
| 8SDX6 78/8 | 30 | 40 | | 156 | 146 | 138 | 128 | 117 | 107 | 94,5 | 80 | 63,3 |
| 8SDXL 78/9 | 37 | 50 | | 176 | 164 | 155 | 144 | 132 | 120 | 106 | 90 | 71,2 |
| 8SDXL 78/10 | 37 | 50 | | 195 | 183 | 173 | 160 | 147 | 134 | 118 | 100 | 79,1 |
| 8SDXL 78/11 | 45 | 60 | | 215 | 201 | 190 | 176 | 162 | 147 | 130 | 110 | 87 |
| 8SDXL 78/12 | 45 | 60 | | 248 | 232 | 218 | 203 | 187 | 171 | 154 | 130 | 105 |
| 8SDXL 78/13 | 51 | 70 | | 268 | 251 | 237 | 220 | 203 | 185 | 166 | 141 | 114 |
| 8SDXL 78/14 | 51 | 70 | | 289 | 271 | 255 | 237 | 218 | 200 | 179 | 152 | 122 |
| 8SDXL 78/15 | 55 | 75 | | 310 | 290 | 273 | 254 | 234 | 214 | 192 | 163 | 131 |
| 8SDXL 78/16 | 59 | 80 | | 332 | 312 | 293 | 274 | 252 | 232 | 206 | 176 | 143 |
| 8SDXL 78/17 | 66 | 90 | | 353 | 332 | 311 | 292 | 268 | 247 | 219 | 187 | 152 |
| 8SDXL 78/18 | 66 | 90 | | 374 | 351 | 329 | 309 | 284 | 261 | 232 | 198 | 161 |
| 8SDXL 78/19 | 75 | 100 | | 394 | 371 | 348 | 326 | 299 | 276 | 245 | 209 | 170 |
| 8SDXL 78/20 | 75 | 100 | | 415 | 390 | 366 | 343 | 315 | 290 | 258 | 220 | 179 |
| 8SDXL 78/21 | 75 | 100 | | 436 | 409 | 385 | 361 | 331 | 304 | 271 | 231 | 187 |
| 8SDXL 78/22 | 92 | 125 | | 457 | 428 | 403 | 378 | 347 | 318 | 284 | 242 | 196 |
| 8SDXL 78/23 | 92 | 125 | | 478 | 448 | 422 | 395 | 363 | 333 | 297 | 253 | 205 |
| 8SDXL 78/24 | 92 | 125 | | 499 | 467 | 440 | 412 | 379 | 347 | 310 | 264 | 214 |

**P2:** Rated motor power output.
**H:** Total head in m

# SDX

calpeda®

## Coverage chart n ≈ 2900 rpm

| Model | P2 | | Q = Flow | | | | | | | | | | |
|---|---|---|---|---|---|---|---|---|---|---|---|---|---|
| | | | m³/h | 0 | 40 | 50 | 60 | 70 | 80 | 90 | 100 | 110 | 120 |
| | | | l/min | | 667 | 833 | 1000 | 1167 | 1333 | 1500 | 1667 | 1833 | 2000 |
| | kW | HP | H (m) = Total head | | | | | | | | | | |
| 8SDXL 97/2 | 9,2 | 12,5 | | 41,2 | 38,6 | 35,2 | 32,2 | 29,8 | 27,8 | 24,8 | 21,8 | 18,6 | 14,8 |
| 8SDXL 97/3 | 13 | 17,5 | | 61,8 | 57,9 | 52,8 | 48,3 | 44,7 | 41,7 | 37,2 | 32,7 | 27,9 | 22,2 |
| 8SDXL 97/4 | 18,5 | 25 | | 82,4 | 77,2 | 70,4 | 64,4 | 59,6 | 55,6 | 49,6 | 43,6 | 37,2 | 29,6 |
| 8SDXL 97/5 | 22 | 30 | | 103 | 96,5 | 88 | 80,5 | 74,5 | 69,5 | 62 | 54,5 | 46,5 | 37 |
| 8SDXL 97/6 | 26 | 35 | | 125 | 113 | 105 | 96,7 | 89 | 82,7 | 75 | 66,3 | 55 | 44 |
| 8SDXL 97/7 | 30 | 40 | | 146 | 132 | 123 | 113 | 104 | 96,4 | 87,5 | 77,4 | 64,2 | 51,3 |
| 8SDXL 97/8 | 37 | 50 | | 167 | 151 | 140 | 129 | 119 | 110 | 100 | 88,4 | 73,3 | 58,7 |
| 8SDXL 97/9 | 37 | 50 | | 188 | 170 | 158 | 145 | 134 | 124 | 113 | 99,5 | 82,5 | 66 |
| 8SDXL 97/10 | 45 | 60 | | 219 | 200 | 185 | 172 | 158 | 147 | 135 | 119 | 102 | 83,1 |
| 8SDXL 97/11 | 51 | 70 | | 241 | 220 | 204 | 189 | 174 | 162 | 149 | 131 | 112 | 91,4 |
| 8SDXL 97/12 | 51 | 70 | | 263 | 240 | 222 | 206 | 190 | 176 | 162 | 143 | 122 | 99,7 |
| 8SDXL 97/13 | 55 | 75 | | 285 | 260 | 241 | 223 | 206 | 191 | 176 | 155 | 132 | 108 |
| 8SDXL 97/14 | 59 | 80 | | 309 | 281 | 262 | 242 | 224 | 208 | 191 | 169 | 144 | 120 |
| 8SDXL 97/15 | 66 | 90 | | 331 | 302 | 279 | 261 | 240 | 222 | 205 | 182 | 156 | 129 |
| 8SDXL 97/16 | 75 | 100 | | 353 | 322 | 298 | 278 | 256 | 237 | 219 | 194 | 166 | 138 |
| 8SDXL 97/17 | 75 | 100 | | 375 | 342 | 317 | 295 | 272 | 251 | 233 | 206 | 176 | 147 |
| 8SDXL 97/18 | 92 | 125 | | 397 | 362 | 335 | 313 | 288 | 266 | 246 | 218 | 187 | 155 |
| 8SDXL 97/19 | 92 | 125 | | 419 | 382 | 354 | 330 | 304 | 281 | 260 | 230 | 197 | 164 |
| 8SDXL 97/20 | 92 | 125 | | 440 | 403 | 374 | 348 | 322 | 298 | 274 | 244 | 209 | 173 |
| 8SDXL 97/21 | 92 | 125 | | 462 | 424 | 393 | 365 | 338 | 313 | 288 | 257 | 219 | 182 |
| 8SDXL 97/22 | 110 | 150 | | 484 | 444 | 411 | 383 | 354 | 328 | 301 | 269 | 230 | 190 |
| 8SDXL 97/23 | 110 | 150 | | 507 | 464 | 430 | 400 | 370 | 343 | 315 | 281 | 240 | 199 |

**P2:** Rated motor power output.
**H:** Total head in m

# SDX

## Coverage chart n ≈ 2900 rpm

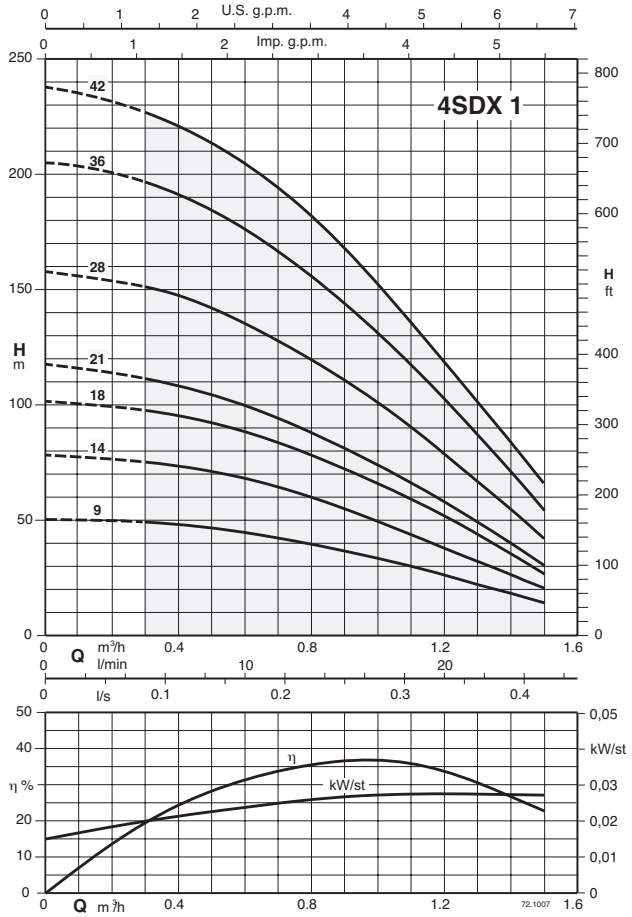


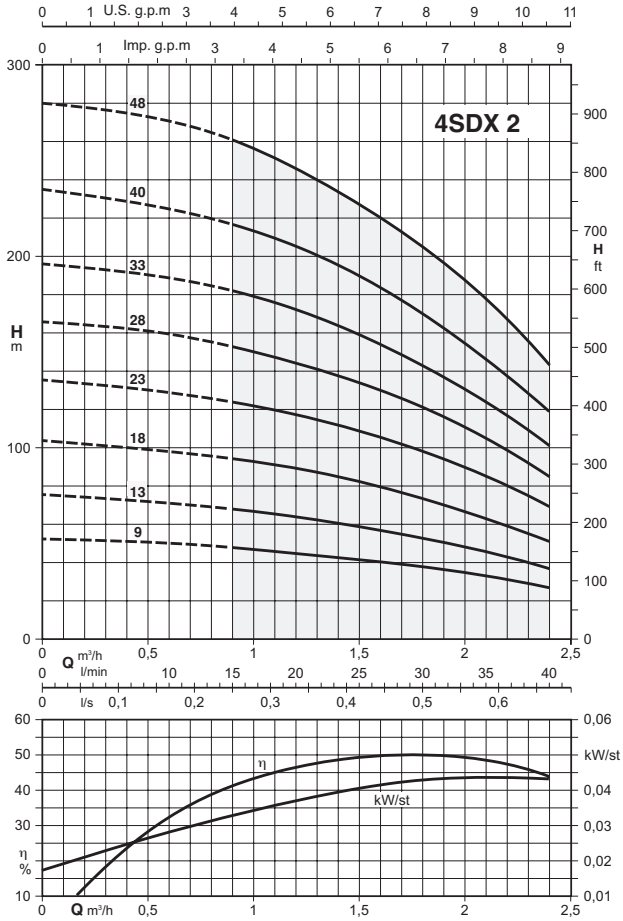


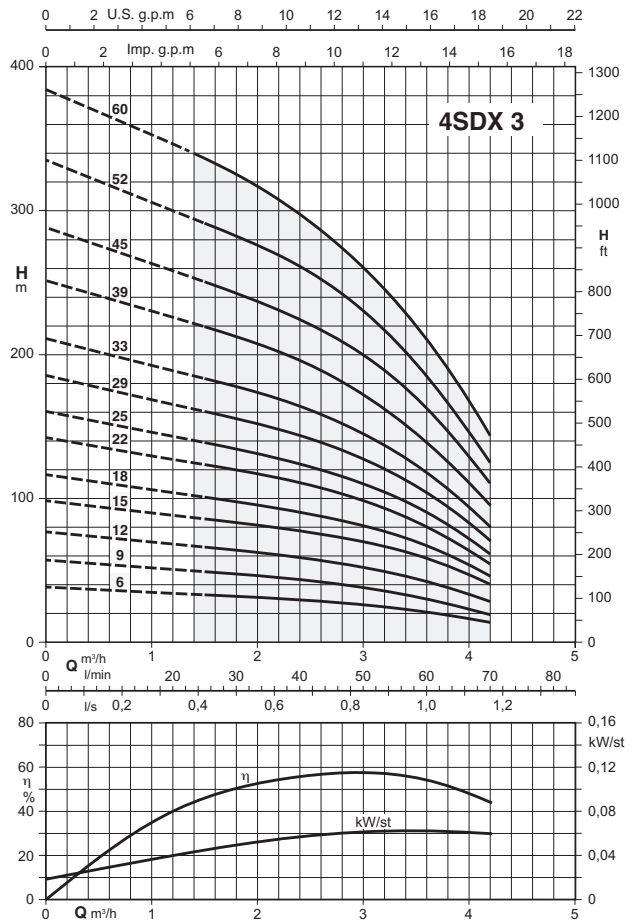


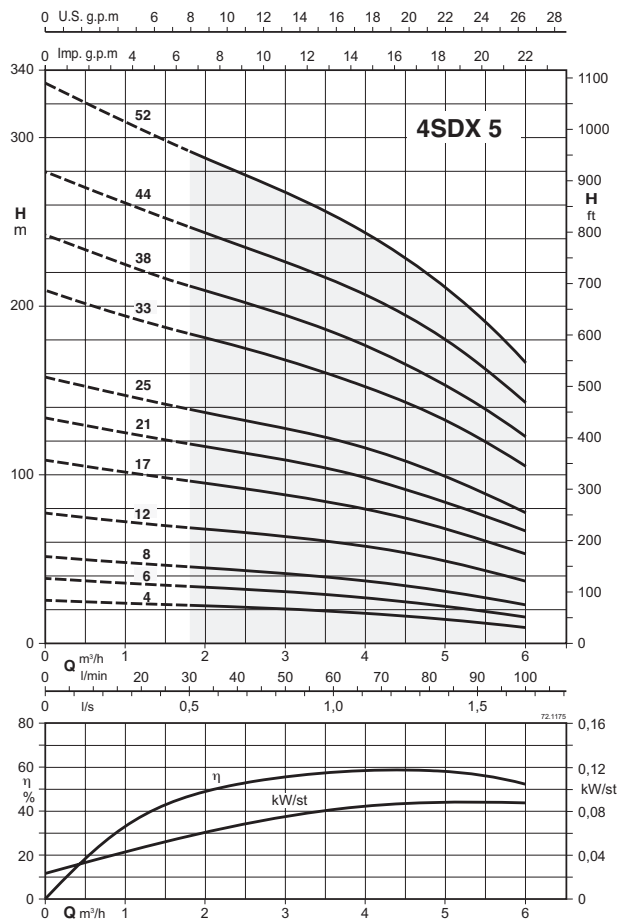

# SDX

## Coverage chart n ≈ 2900 rpm

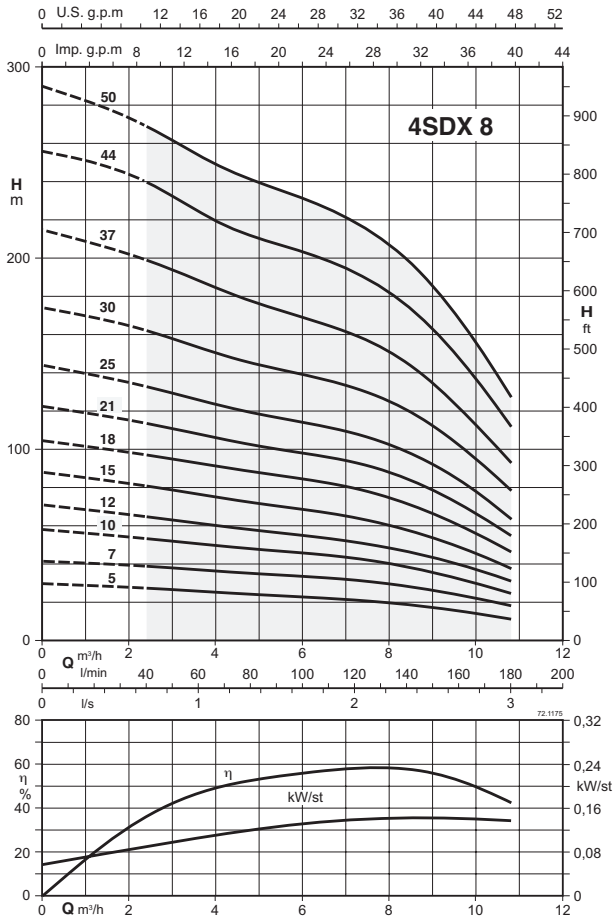


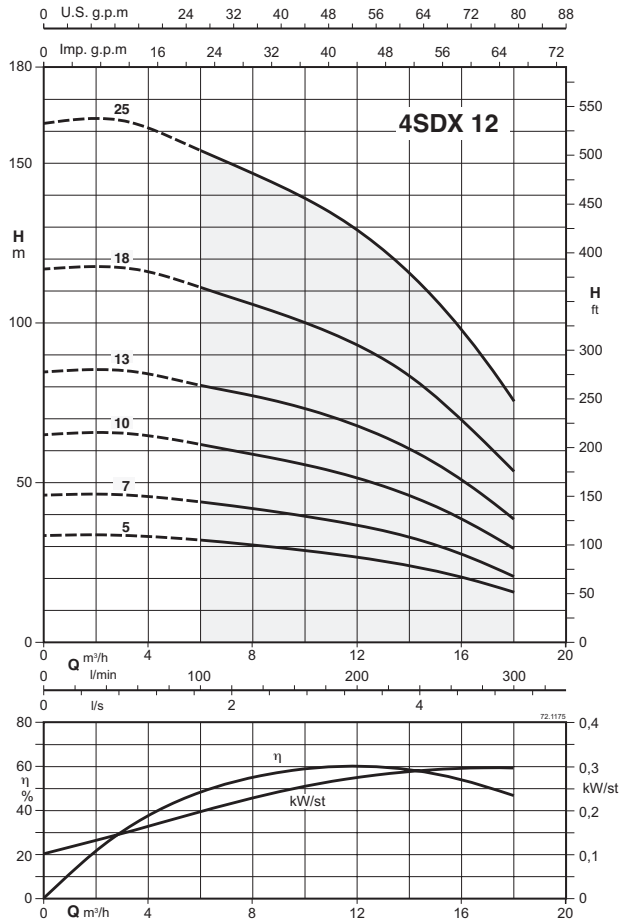


**4SDX(M) 8,12** Pumps for specific applications with high sand content

# SDX

## Coverage chart n ≈ 2900 rpm

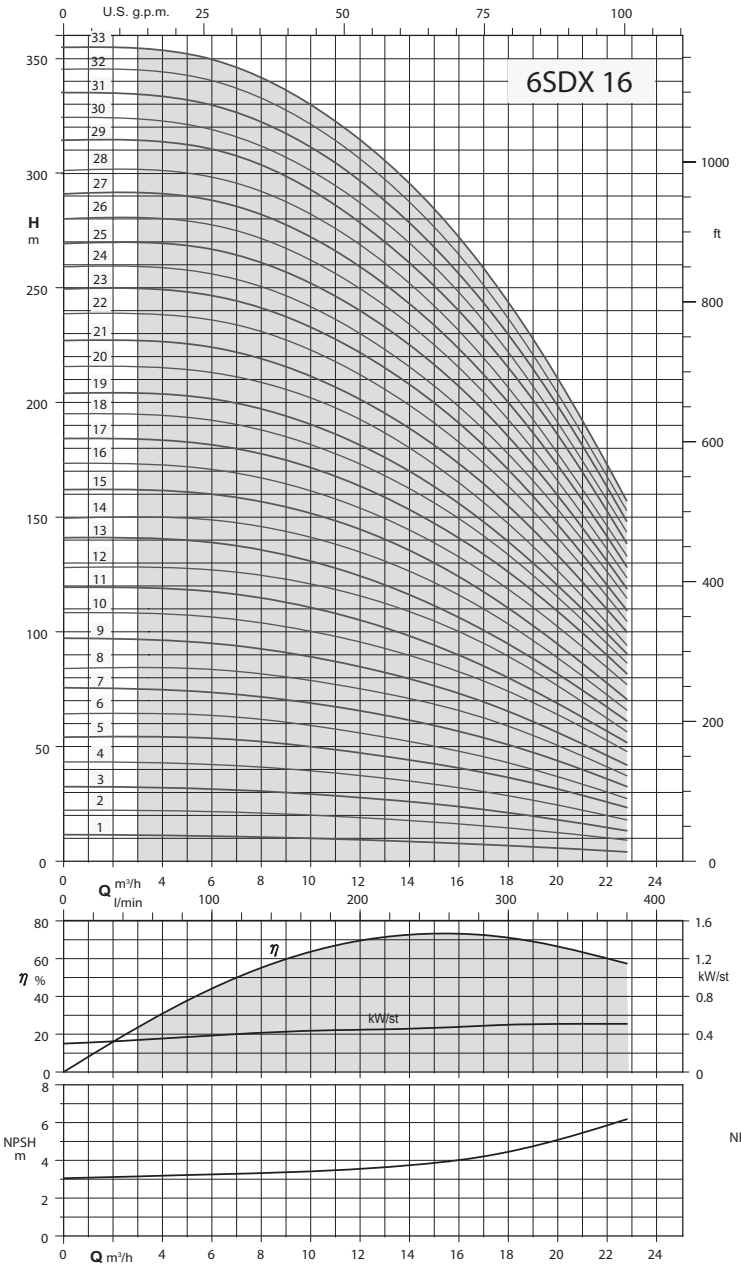


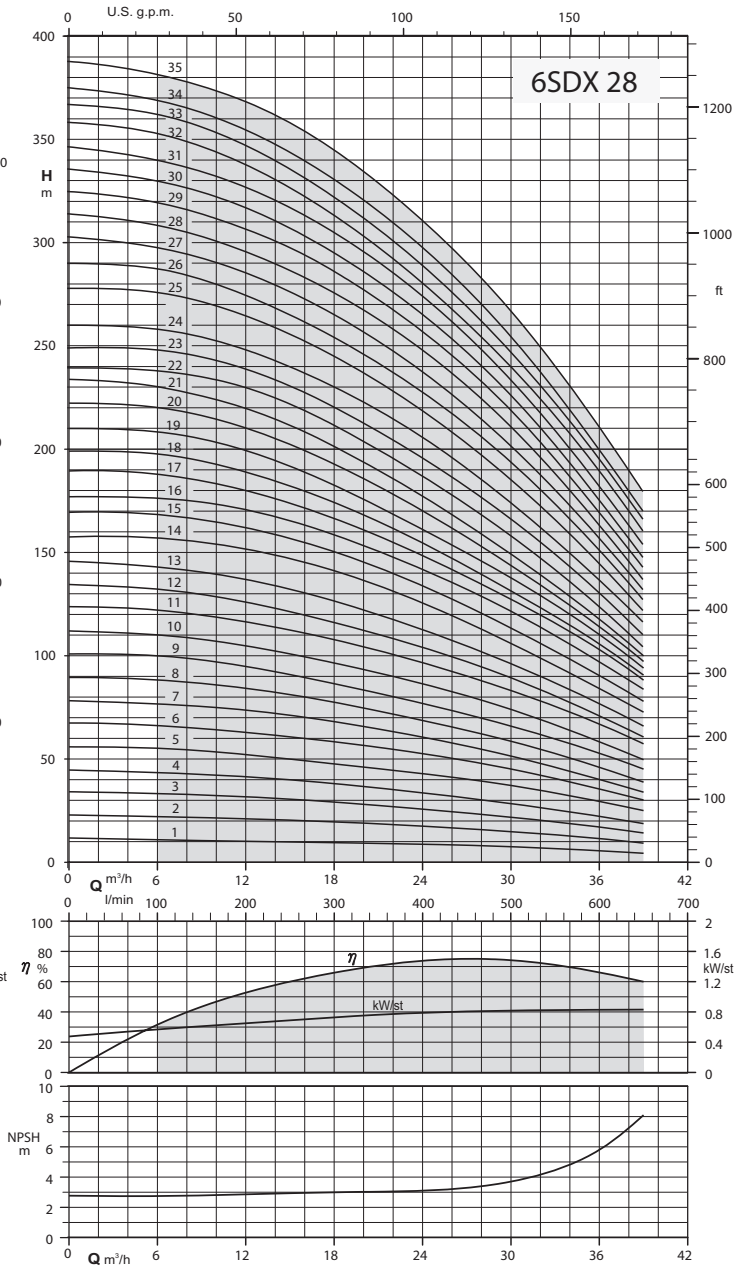

# SDX

## Coverage chart n ≈ 2900 rpm

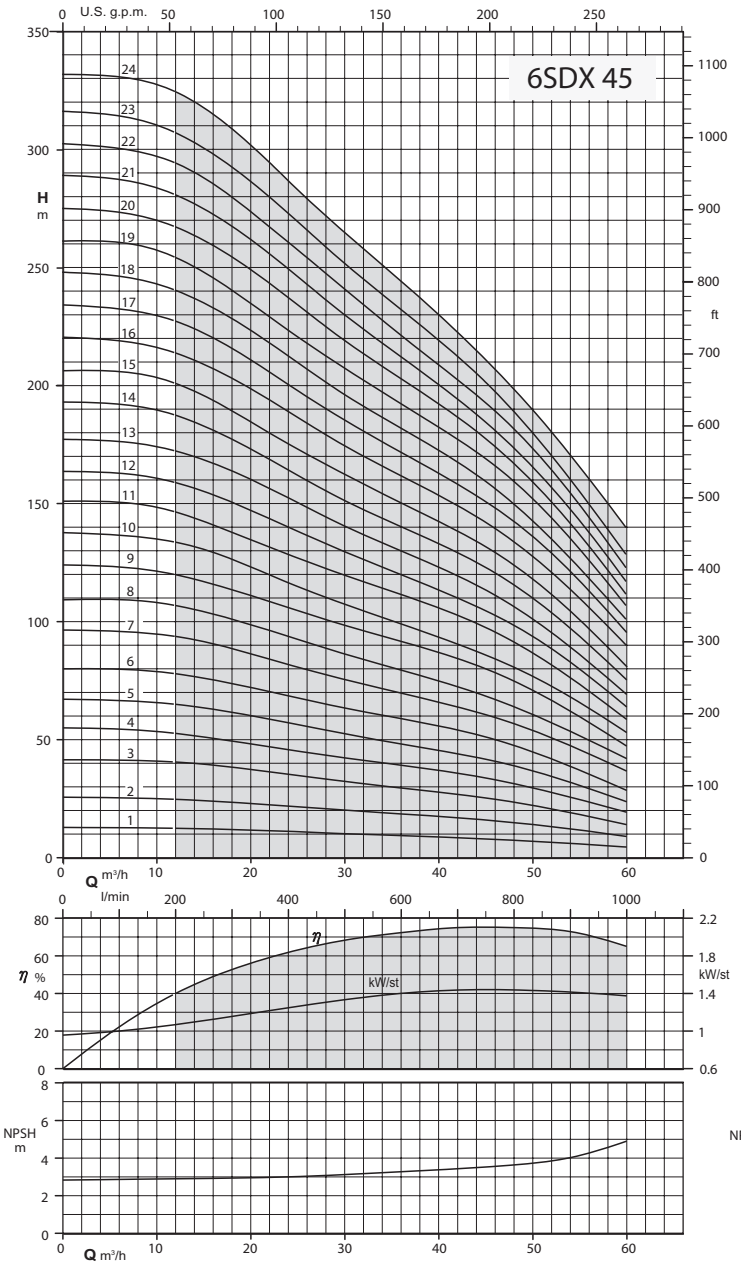


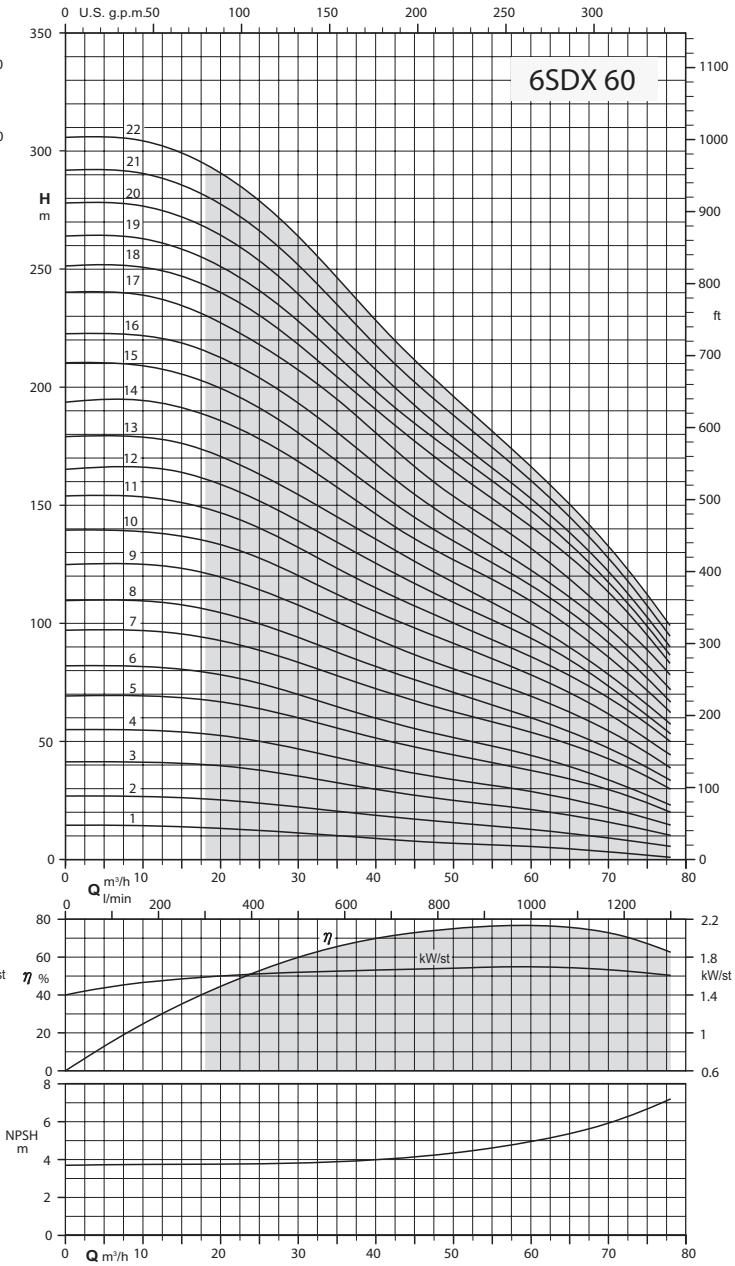

# SDX

## Characteristic curves n ≈ 2900 rpm

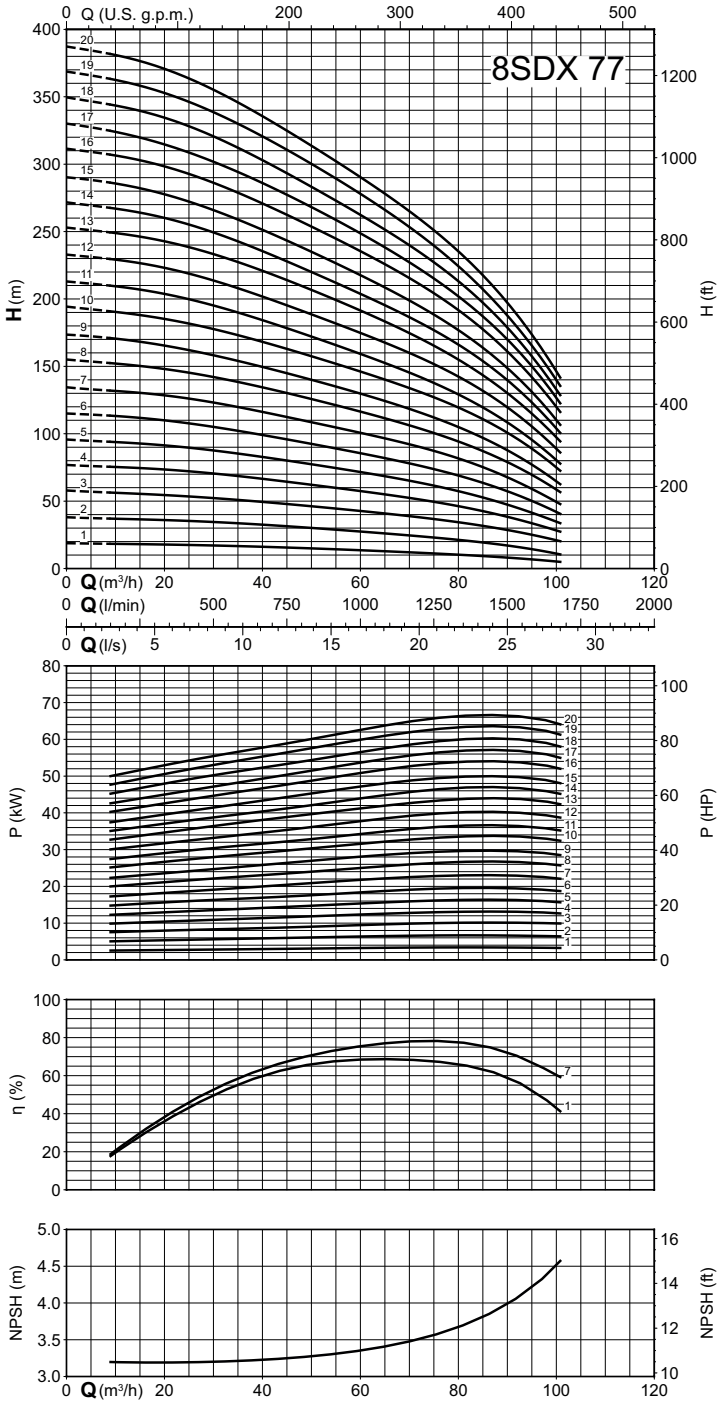


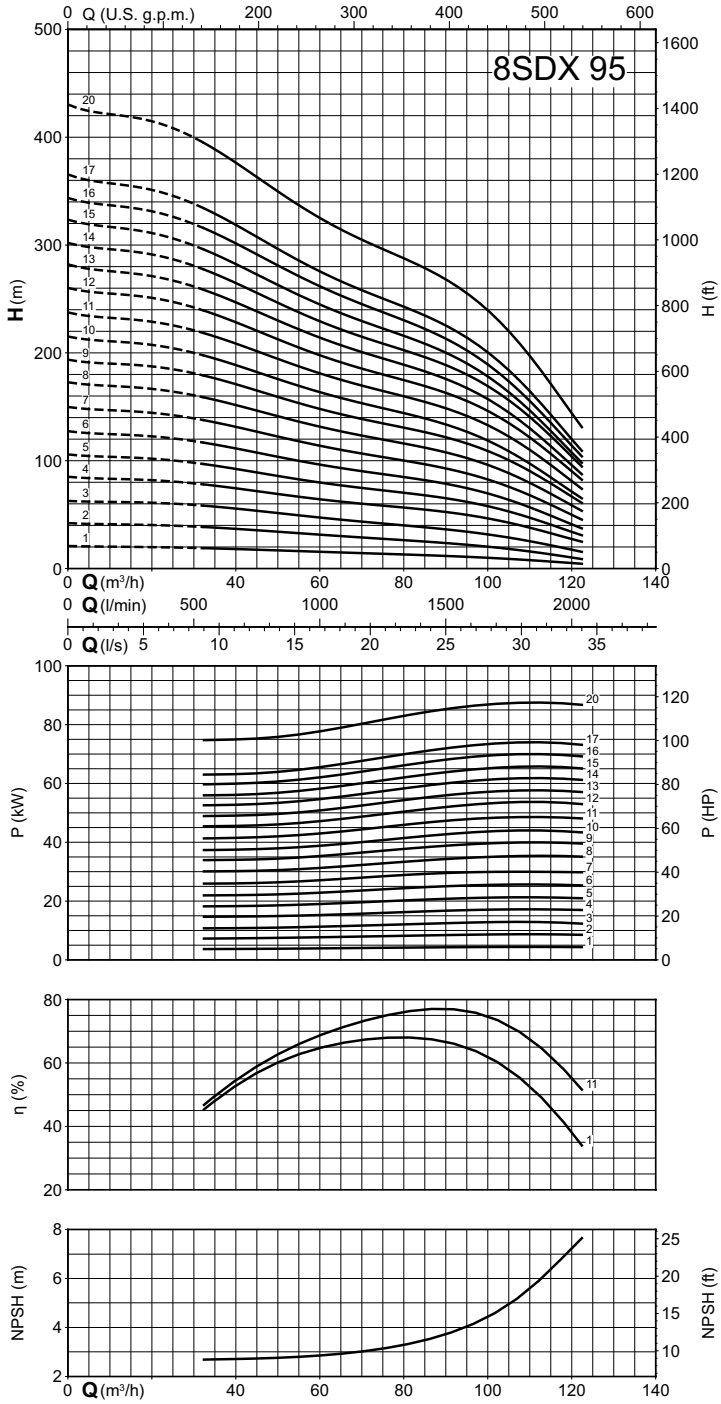

# SDX

## Coverage chart n ≈ 2900 rpm

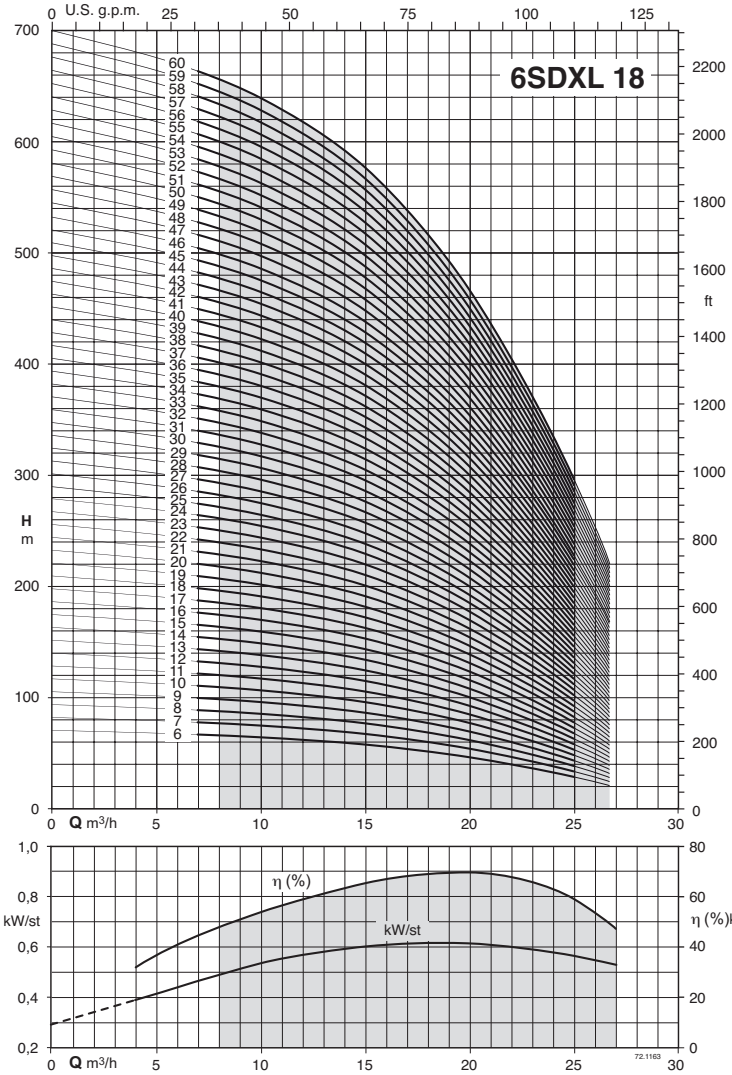


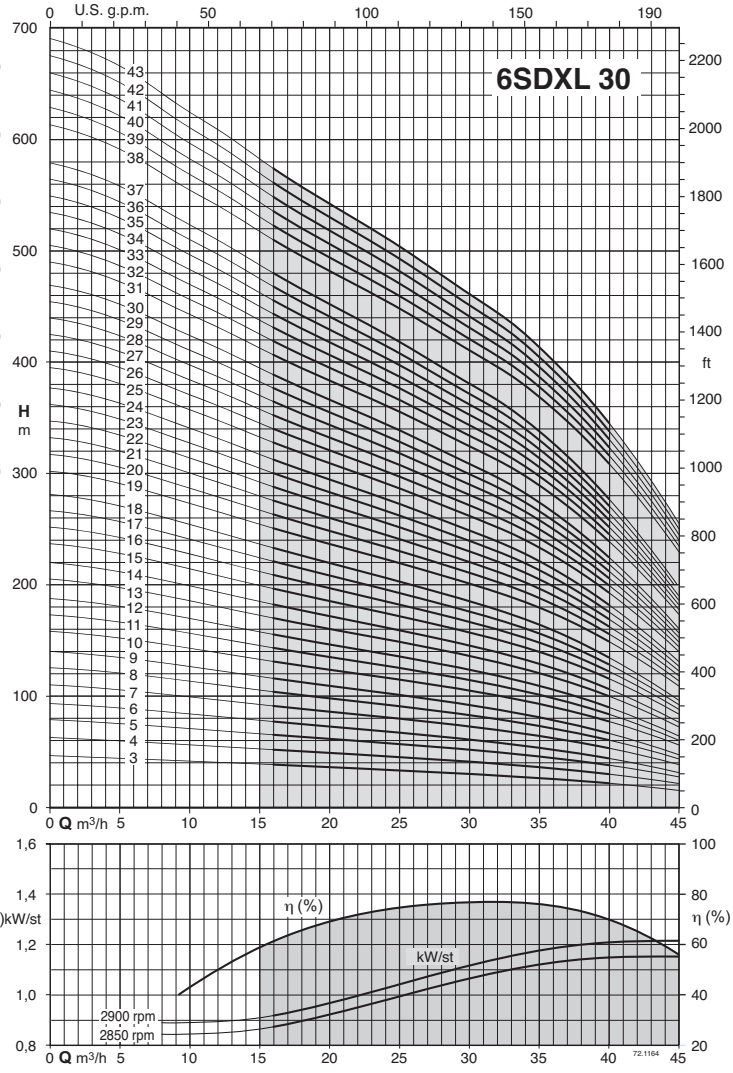

# SDX

## Coverage chart n ≈ 2900 rpm

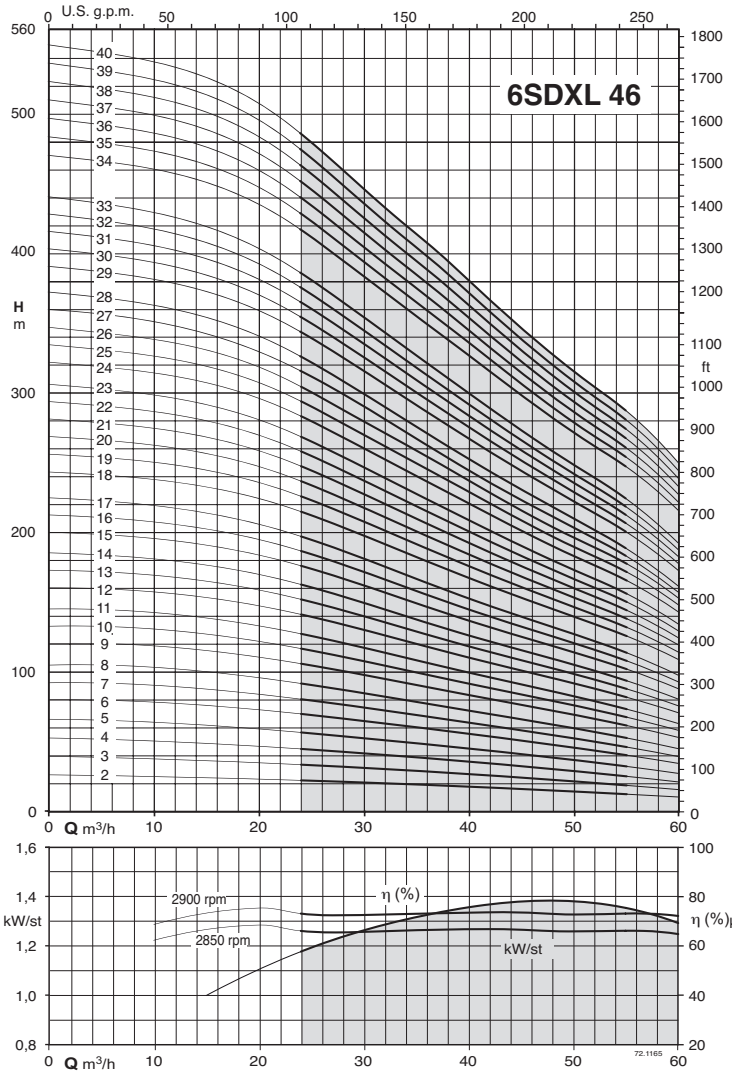


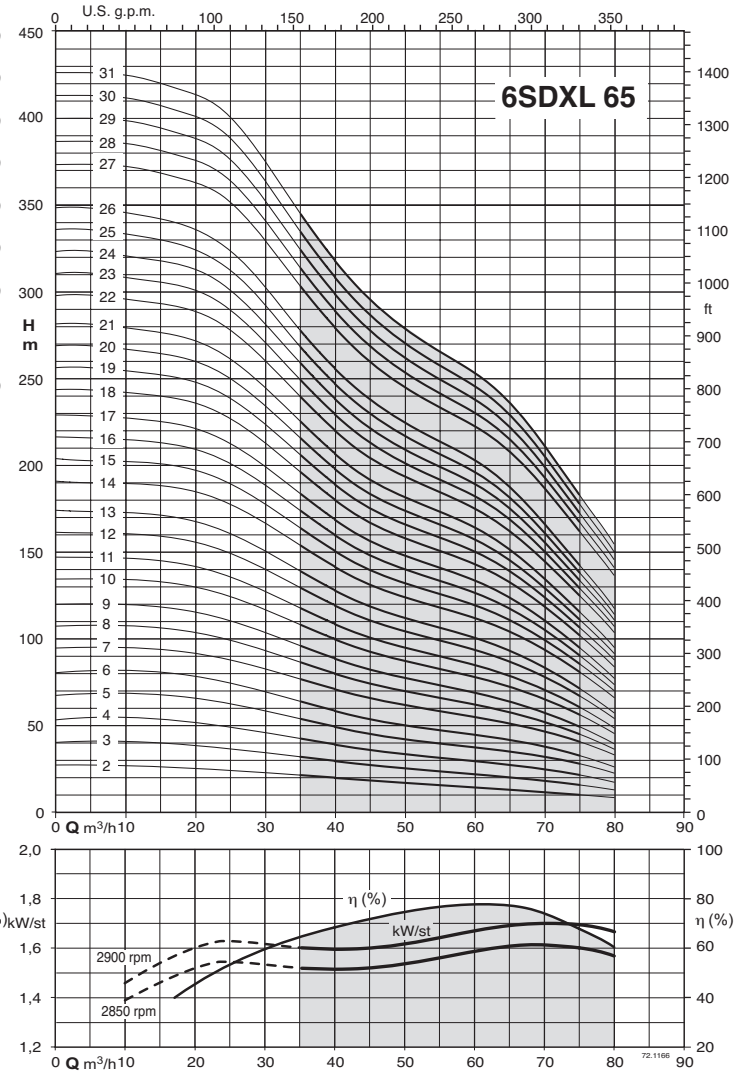

# SDX

calpeda®

## Coverage chart n ≈ 2900 rpm

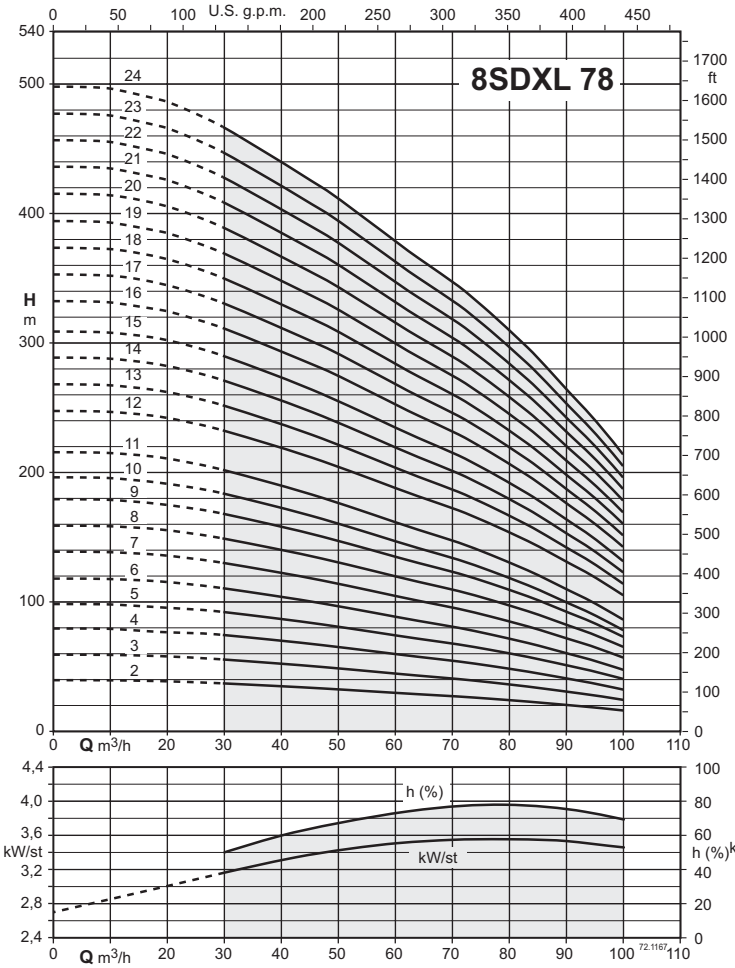


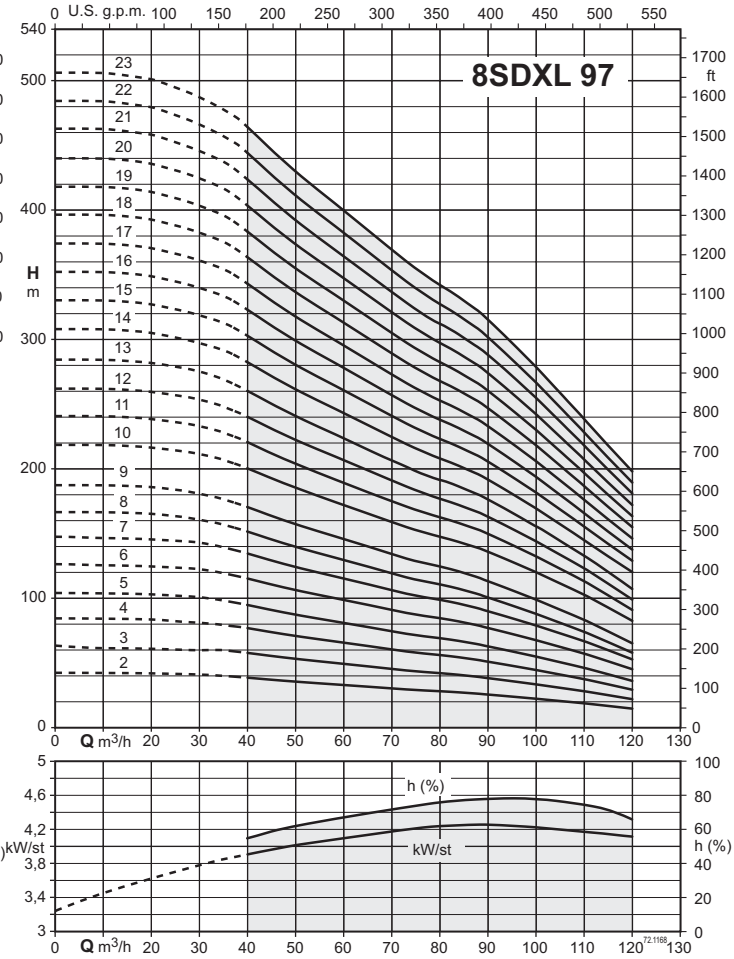

# SDX

## Dimensions and weights

| TYPE | | mm | | | | kg |
|---|---|---|---|---|---|---|
| | DN2 | f | fM | l4 | l5 | Weight |
| 4SDX 1/9C | Rp 1 1/4" | 356 | 667.3 | 4" | 98 | - |
| 4SDX 1/14C | Rp 1 1/4" | 461 | 772.3 | 4" | 98 | - |
| 4SDX 1/18C | Rp 1 1/4" | 545 | 876.4 | 4" | 98 | - |
| 4SDX 1/21C | Rp 1 1/4" | 608 | 939.4 | 4" | 98 | - |
| 4SDX 1/28C | Rp 1 1/4" | 755 | 1111.4 | 4" | 98 | - |
| 4SDX 1/36C | Rp 1 1/4" | 946 | 1317.4 | 4" | 98 | - |
| 4SDX 1/42C | Rp 1 1/4" | 1072 | 1443.4 | 4" | 98 | - |
| 4SDX 2/9C | Rp 1 1/4" | 356 | 667.3 | 4" | 98 | - |
| 4SDX 2/13C | Rp 1 1/4" | 440 | 771.4 | 4" | 98 | - |
| 4SDX 2/18C | Rp 1 1/4" | 545 | 901.4 | 4" | 98 | - |
| 4SDX 2/23C | Rp 1 1/4" | 650 | 1021.4 | 4" | 98 | - |
| 4SDX 2/28C | Rp 1 1/4" | 755 | 1151.4 | 4" | 98 | - |
| 4SDX 2/33C | Rp 1 1/4" | 883 | 1279.4 | 4" | 98 | - |
| 4SDX 2/40C | Rp 1 1/4" | 1030 | 1466.5 | 4" | 98 | - |
| 4SDX 2/48C | Rp 1 1/4" | 1198 | 1634.5 | 4" | 98 | - |
| 4SDX 3/6C | Rp 1 1/4" | 293 | 604.3 | 4" | 98 | - |
| 4SDX 3/9C | Rp 1 1/4" | 356 | 687.4 | 4" | 98 | - |
| 4SDX 3/12C | Rp 1 1/4" | 419 | 775.4 | 4" | 98 | - |
| 4SDX 3/15C | Rp 1 1/4" | 482 | 853.4 | 4" | 98 | - |
| 4SDX 3/18C | Rp 1 1/4" | 545 | 916.4 | 4" | 98 | - |
| 4SDX 3/22C | Rp 1 1/4" | 629 | 1025.4 | 4" | 98 | - |
| 4SDX 3/25C | Rp 1 1/4" | 692 | 1088.4 | 4" | 98 | - |
| 4SDX 3/29C | Rp 1 1/4" | 776 | 1212.5 | 4" | 98 | - |
| 4SDX 3/33C | Rp 1 1/4" | 883 | 1319.5 | 4" | 98 | - |
| 4SDX 3/39C | Rp 1 1/4" | 1009 | 1459 | 4" | 98 | - |
| 4SDX 3/45C | Rp 1 1/4" | 1135 | 1585 | 4" | 98 | - |
| 4SDX 3/52C | Rp 1 1/4" | 1282 | 1787 | 4" | 98 | - |
| 4SDX 3/60C | Rp 1 1/4" | 1450 | 1955 | 4" | 98 | 34.5 |
| 4SDX 5/4C | Rp 1 1/2" | 251 | 562.3 | 4" | 98 | - |
| 4SDX 5/6C | Rp 1 1/2" | 293 | 624.4 | 4" | 98 | - |
| 4SDX 5/8C | Rp 1 1/2" | 335 | 691.4 | 4" | 98 | - |
| 4SDX 5/12C | Rp 1 1/2" | 419 | 790.4 | 4" | 98 | - |
| 4SDX 5/17C | Rp 1 1/2" | 524 | 920.4 | 4" | 98 | - |
| 4SDX 5/21C | Rp 1 1/2" | 608 | 1044.5 | 4" | 98 | - |
| 4SDX 5/25C | Rp 1 1/2" | 392 | 828.5 | 4" | 98 | 18.5 |
| 4SDX 5/33C | Rp 1 1/2" | 868 | 1318 | 4" | 98 | 22.9 |
| 4SDX 5/38C | Rp 1 1/2" | 973 | 1478 | 4" | 98 | - |
| 4SDX 5/44C | Rp 1 1/2" | 1099 | 1604 | 4" | 98 | - |
| 4SDX 5/52C | Rp 1 1/2" | 1267 | 1856 | 4" | 98 | 36.9 |
| 4SDX 8/5C | Rp 2" | 412 | 768.4 | 4" | 98 | - |
| 4SDX 8/7C | Rp 2" | 496 | 867.4 | 4" | 98 | - |
| 4SDX 8/10C | Rp 2" | 622 | 1018.4 | 4" | 98 | - |
| 4SDX 8/12C | Rp 2" | 706 | 1142.5 | 4" | 98 | - |
| 4SDX 8/15C | Rp 2" | 832 | 1268.5 | 4" | 98 | 21.4 |
| 4SDX 8/18C | Rp 2" | 958 | 1408 | 4" | 98 | - |
| 4SDX 8/21C | Rp 2" | 1084 | 1589 | 4" | 98 | - |
| 4SDX 8/25C | Rp 2" | 1252 | 1757 | 4" | 98 | - |
| 4SDX 8/30C | Rp 2" | 1462 | 2051 | 4" | 98 | - |
| 4SDX 8/37C | Rp 2" | 1753 | 2342 | 4" | 98 | 39 |
| 4SDX 8/44C | Rp 2" | 2047 | 2847 | 4" | 98 | - |
| 4SDX 8/50C | Rp 2" | 2299 | 3099 | 4" | 98 | - |
| 4SDX 12/5C | Rp 2" | 505 | 901.4 | 4" | 98 | - |
| 4SDX 12/7C | Rp 2" | 635 | 1071.5 | 4" | 98 | - |
| 4SDX 12/10C | Rp 2" | 830 | 1280 | 4" | 98 | 22.3 |
| 4SDX 12/13C | Rp 2" | 1025 | 1530 | 4" | 98 | - |
| 4SDX 12/18C | Rp 2" | 1350 | 1939 | 4" | 98 | 36 |
| 4SDX 12/25C | Rp 2" | 1805 | 2605 | 4" | 98 | - |

| TYPE | | mm | | | | kg |
|---|---|---|---|---|---|---|
| | DN2 | f | fM | l4 | l5 | Weight |
| 4SDXM 1/9C | Rp 1 1/4" | 356 | 667.3 | 4" | 98 | - |
| 4SDXM 1/14C | Rp 1 1/4" | 461 | 772.3 | 4" | 98 | - |
| 4SDXM 1/18C | Rp 1 1/4" | 545 | 876.4 | 4" | 98 | - |
| 4SDXM 1/21C | Rp 1 1/4" | 608 | 939.4 | 4" | 98 | - |
| 4SDXM 1/28C | Rp 1 1/4" | 755 | 1111.4 | 4" | 98 | - |
| 4SDXM 1/36C | Rp 1 1/4" | 946 | 1342.4 | 4" | 98 | - |
| 4SDXM 1/42C | Rp 1 1/4" | 1072 | 1468.4 | 4" | 98 | - |
| 4SDXM 2/9C | Rp 1 1/4" | 356 | 667.3 | 4" | 98 | - |
| 4SDXM 2/13C | Rp 1 1/4" | 440 | 771.4 | 4" | 98 | - |
| 4SDXM 2/18C | Rp 1 1/4" | 545 | 901.4 | 4" | 98 | - |
| 4SDXM 2/23C | Rp 1 1/4" | 650 | 1046.4 | 4" | 98 | - |
| 4SDXM 2/28C | Rp 1 1/4" | 755 | 1191.5 | 4" | 98 | - |
| 4SDXM 2/33C | Rp 1 1/4" | 883 | 1319.5 | 4" | 98 | - |
| 4SDXM 2/40C | Rp 1 1/4" | 1030 | 1521.5 | 4" | 98 | - |
| 4SDXM 2/48C | Rp 1 1/4" | 1198 | 1689.5 | 4" | 98 | - |
| 4SDXM 3/6C | Rp 1 1/4" | 293 | 604.3 | 4" | 98 | - |
| 4SDXM 3/9C | Rp 1 1/4" | 356 | 687.4 | 4" | 98 | 12 |
| 4SDXM 3/12C | Rp 1 1/4" | 419 | 775.4 | 4" | 98 | - |
| 4SDXM 3/15C | Rp 1 1/4" | 482 | 878.4 | 4" | 98 | - |
| 4SDXM 3/18C | Rp 1 1/4" | 545 | 941.4 | 4" | 98 | - |
| 4SDXM 3/22C | Rp 1 1/4" | 629 | 1065.5 | 4" | 98 | - |
| 4SDXM 3/25C | Rp 1 1/4" | 692 | 1128.5 | 4" | 98 | - |
| 4SDXM 3/29C | Rp 1 1/4" | 776 | 1267.5 | 4" | 98 | - |
| 4SDXM 3/33C | Rp 1 1/4" | 883 | 1374.5 | 4" | 98 | - |
| 4SDXM 5/4C | Rp 1 1/2" | 251 | 562.3 | 4" | 98 | - |
| 4SDXM 5/6C | Rp 1 1/2" | 293 | 624.4 | 4" | 98 | - |
| 4SDXM 5/8C | Rp 1 1/2" | 335 | 691.4 | 4" | 98 | - |
| 4SDXM 5/12C | Rp 1 1/2" | 419 | 815.4 | 4" | 98 | - |
| 4SDXM 5/17C | Rp 1 1/2" | 524 | 960.5 | 4" | 98 | 16.8 |
| 4SDXM 5/21C | Rp 1 1/2" | 608 | 1099.5 | 4" | 98 | - |
| 4SDXM 5/25C | Rp 1 1/2" | 392 | 883.5 | 4" | 98 | - |
| 4SDXM 8/5C | Rp 2" | 412 | 768.4 | 4" | 98 | - |
| 4SDXM 8/7C | Rp 2" | 496 | 892.4 | 4" | 98 | - |
| 4SDXM 8/10C | Rp 2" | 622 | 1058.5 | 4" | 98 | - |
| 4SDXM 8/12C | Rp 2" | 706 | 1197.5 | 4" | 98 | - |
| 4SDXM 8/15C | Rp 2" | 832 | 1323.5 | 4" | 98 | - |
| 4SDXM 12/5C | Rp 2" | 505 | 941.5 | 4" | 98 | - |
| 4SDXM 12/7C | Rp 2" | 635 | 1126.5 | 4" | 98 | - |

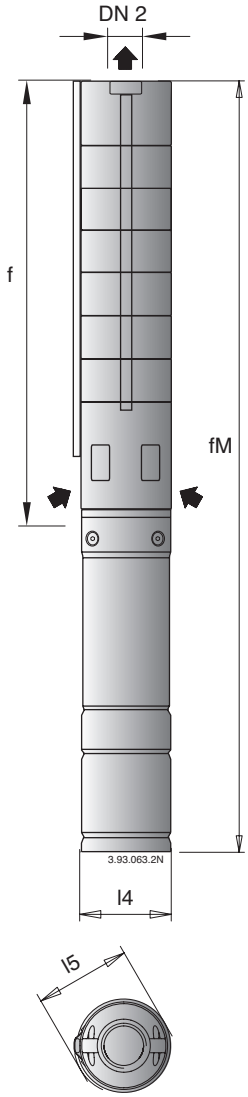

# SDX

calpeda

## Dimensions and weights

| TYPE | | mm | | kg |
|---|---|---|---|---|
| | DN2 | f | l4 | Weight |
| 6SDX 16/1 | RP 3" | 343 | 4" | - |
| 6SDX 16/2 | RP 3" | 403 | 4" | 6 |
| 6SDX 16/3 | RP 3" | 464 | 4" | 7.2 |
| 6SDX 16/4 | RP 3" | 524 | 4" | - |
| 6SDX 16/5 | RP 3" | 585 | 4" | 9.8 |
| 6SDX 16/6 | RP 3" | 645 | 4" | 11.8 |
| 6SDX 16/7 | RP 3" | 706 | 4" | 12.7 |
| 6SDX 16/8 | RP 3" | 766 | 4" | 15.1 |
| 6SDX 16/9 | RP 3" | 827 | 4" | 15 |
| 6SDX 16/10 | RP 3" | 887 | 4" | 16.4 |
| 6SDX 16/11 | RP 3" | 948 | 6" | 18.6 |
| 6SDX 16/12 | RP 3" | 1008 | 6" | 20.6 |
| 6SDX 16/13 | RP 3" | 1069 | 6" | 22.4 |
| 6SDX 16/14 | RP 3" | 1129 | 6" | 22.3 |
| 6SDX 16/15 | RP 3" | 1190 | 6" | 25.5 |
| 6SDX 16/16 | RP 3" | 1250 | 6" | 26.8 |
| 6SDX 16/17 | RP 3" | 1311 | 6" | - |
| 6SDX 16/18 | RP 3" | 1371 | 6" | 30.5 |
| 6SDX 16/19 | RP 3" | 1432 | 6" | 28.5 |
| 6SDX 16/20 | RP 3" | 1492 | 6" | - |
| 6SDX 16/21 | RP 3" | 1553 | 6" | 36 |
| 6SDX 16/22 | RP 3" | 1613 | 6" | 33 |
| 6SDX 16/23 | RP 3" | 1674 | 6" | 35 |
| 6SDX 16/24 | RP 3" | 1734 | 6" | - |
| 6SDX 16/25 | RP 3" | 1795 | 6" | - |
| 6SDX 16/26 | RP 3" | 1855 | 6" | 39.7 |
| 6SDX 16/27 | RP 3" | 1916 | 6" | - |
| 6SDX 16/28 | RP 3" | 1976 | 6" | - |
| 6SDX 16/29 | RP 3" | 2037 | 6" | - |
| 6SDX 16/30 | RP 3" | 2097 | 6" | - |
| 6SDX 16/31 | RP 3" | 2158 | 6" | - |
| 6SDX 16/32 | RP 3" | 2218 | 6" | - |
| 6SDX 16/33 | RP 3" | 2279 | 6" | 48 |

| TYPE | | mm | | kg |
|---|---|---|---|---|
| | DN2 | f | l4 | Weight |
| 6SDX 45/1 | RP 4" | 383 | 4" | 5.8 |
| 6SDX 45/2 | RP 4" | 496 | 4" | 8.3 |
| 6SDX 45/3 | RP 4" | 609 | 4" | 11.5 |
| 6SDX 45/4 | RP 4" | 722 | 6" | 14.1 |
| 6SDX 45/5 | RP 4" | 835 | 6" | 16.4 |
| 6SDX 45/6 | RP 4" | 948 | 6" | 19.1 |
| 6SDX 45/7 | RP 4" | 1061 | 6" | 21.4 |
| 6SDX 45/8 | RP 4" | 1174 | 6" | 22.9 |
| 6SDX 45/9 | RP 4" | 1287 | 6" | 27 |
| 6SDX 45/10 | RP 4" | 1400 | 6" | 29.5 |
| 6SDX 45/11 | RP 4" | 1513 | 6" | 29.7 |
| 6SDX 45/12 | RP 4" | 1626 | 6" | 32 |
| 6SDX 45/13 | RP 4" | 1739 | 6" | 35 |
| 6SDX 45/14 | RP 4" | 1852 | 6" | - |
| 6SDX 45/15 | RP 4" | 1965 | 6" | 38.8 |
| 6SDX 45/16 | RP 4" | 2078 | 6" | 41 |
| 6SDX 45/17 | RP 4" | 2191 | 6" | 43.4 |
| 6SDX 45/18 | RP 4" | 2304 | 6" | - |
| 6SDX 45/19 | RP 4" | 2417 | 6" | 51 |
| 6SDX 45/20 | RP 4" | 2530 | 6" | 50 |
| 6SDX 45/21 | RP 4" | 2643 | 6" | - |
| 6SDX 45/22 | RP 4" | 2756 | 6" | - |
| 6SDX 45/23 | RP 4" | 2869 | 6" | - |
| 6SDX 45/24 | RP 4" | 2982 | 6" | - |

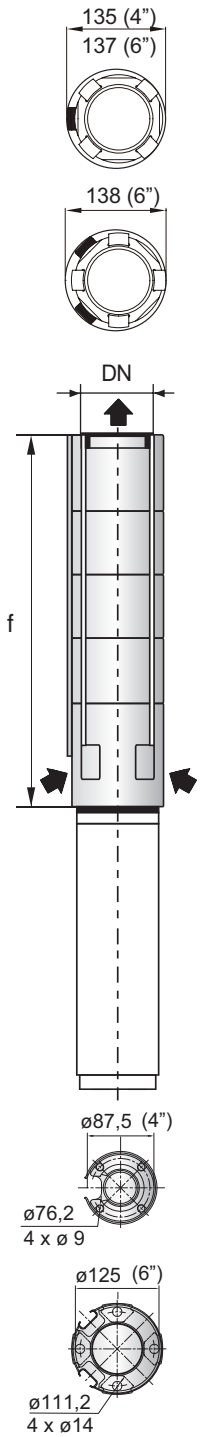


| TYPE | | mm | | kg |
|---|---|---|---|---|
| | DN2 | f | l4 | Weight |
| 6SDX 28/1 | RP 3" | 366 | 4" | - |
| 6SDX 28/2 | RP 3" | 462 | 4" | 7.3 |
| 6SDX 28/3 | RP 3" | 558 | 4" | 8.6 |
| 6SDX 28/4 | RP 3" | 654 | 4" | 12.5 |
| 6SDX 28/5 | RP 3" | 750 | 4" | 12.5 |
| 6SDX 28/6 | RP 3" | 846 | 4" | 14.3 |
| 6SDX 28/7 | RP 3" | 942 | 6" | 16.9 |
| 6SDX 28/8 | RP 3" | 1038 | 6" | 19.2 |
| 6SDX 28/9 | RP 3" | 1134 | 6" | 20.3 |
| 6SDX 28/10 | RP 3" | 1230 | 6" | 23 |
| 6SDX 28/11 | RP 3" | 1326 | 6" | 23.6 |
| 6SDX 28/12 | RP 3" | 1422 | 6" | 25.3 |
| 6SDX 28/13 | RP 3" | 1518 | 6" | 28 |
| 6SDX 28/14 | RP 3" | 1614 | 6" | 30 |
| 6SDX 28/15 | RP 3" | 1710 | 6" | 30 |
| 6SDX 28/16 | RP 3" | 1806 | 6" | - |
| 6SDX 28/17 | RP 3" | 1902 | 6" | 35 |
| 6SDX 28/18 | RP 3" | 1998 | 6" | - |
| 6SDX 28/19 | RP 3" | 2094 | 6" | - |
| 6SDX 28/20 | RP 3" | 2190 | 6" | 38.9 |
| 6SDX 28/21 | RP 3" | 2286 | 6" | - |
| 6SDX 28/22 | RP 3" | 2382 | 6" | 44 |
| 6SDX 28/23 | RP 3" | 2478 | 6" | 46 |
| 6SDX 28/24 | RP 3" | 2574 | 6" | - |
| 6SDX 28/25 | RP 3" | 2670 | 6" | - |
| 6SDX 28/26 | RP 3" | 2766 | 6" | 52 |
| 6SDX 28/27 | RP 3" | 2862 | 6" | - |
| 6SDX 28/28 | RP 3" | 2958 | 6" | - |
| 6SDX 28/29 | RP 3" | 3054 | 6" | - |
| 6SDX 28/30 | RP 3" | 3150 | 6" | 55.8 |
| 6SDX 28/31 | RP 3" | 3246 | 6" | 61 |
| 6SDX 28/32 | RP 3" | 3342 | 6" | 75 |
| 6SDX 28/33 | RP 3" | 3438 | 6" | - |
| 6SDX 28/34 | RP 3" | 3534 | 6" | - |
| 6SDX 28/35 | RP 3" | 3630 | 6" | - |

| TYPE | | mm | | kg |
|---|---|---|---|---|
| | DN2 | f | l4 | Weight |
| 6SDX 60/1 | RP 4" | 383 | 4" | - |
| 6SDX 60/2 | RP 4" | 496 | 4" | 9.2 |
| 6SDX 60/3 | RP 4" | 609 | 4" | 10.4 |
| 6SDX 60/4 | RP 4" | 722 | 6" | 15 |
| 6SDX 60/5 | RP 4" | 835 | 6" | 16 |
| 6SDX 60/6 | RP 4" | 948 | 6" | 18.3 |
| 6SDX 60/7 | RP 4" | 1061 | 6" | 24 |
| 6SDX 60/8 | RP 4" | 1174 | 6" | 24.5 |
| 6SDX 60/9 | RP 4" | 1287 | 6" | 25.1 |
| 6SDX 60/10 | RP 4" | 1400 | 6" | 29 |
| 6SDX 60/11 | RP 4" | 1513 | 6" | 29.7 |
| 6SDX 60/12 | RP 4" | 1626 | 6" | 32.5 |
| 6SDX 60/13 | RP 4" | 1739 | 6" | 34.3 |
| 6SDX 60/14 | RP 4" | 1852 | 6" | 41 |
| 6SDX 60/15 | RP 4" | 1965 | 6" | 39.5 |
| 6SDX 60/16 | RP 4" | 2078 | 6" | 42 |
| 6SDX 60/17 | RP 4" | 2191 | 6" | - |
| 6SDX 60/18 | RP 4" | 2304 | 6" | - |
| 6SDX 60/19 | RP 4" | 2417 | 6" | - |
| 6SDX 60/20 | RP 4" | 2530 | 6" | 50 |
| 6SDX 60/21 | RP 4" | 2463 | 6" | - |
| 6SDX 60/22 | RP 4" | 2784 | 6" | - |

# SDX

calpeda®

## Dimensions and weights

| TYPE | | mm | | | kg |
|---|---|---|---|---|---|
| | DN2 | f | l4 | l5 | Weight |
| **8SDX 77/1 6SM** | Rp5 | 581 | 163 | 180 | 24.6 |
| **8SDX 77/2 6SM** | Rp5 | 709 | 163 | 180 | 28.6 |
| **8SDX 77/3 6SM** | Rp5 | 837 | 163 | 180 | 32.7 |
| **8SDX 77/4 6SM** | Rp5 | 965 | 163 | 180 | 36.8 |
| **8SDX 77/5 6SM** | Rp5 | 1093 | 163 | 180 | 40.9 |
| **8SDX 77/6 6SM** | Rp5 | 1221 | 163 | 180 | 44.9 |
| **8SDX 77/7 6SM** | Rp5 | 1349 | 163 | 180 | 49 |
| **8SDX 77/8 6SM** | Rp5 | 1477 | 163 | 180 | 53.1 |
| **8SDX 77/8 8SM** | Rp5 | 1483.5 | 163 | 193 | 53.3 |
| **8SDX 77/9 6SM** | Rp5 | 1605 | 163 | 180 | 57.1 |
| **8SDX 77/9 8SM** | Rp5 | 1611.5 | 163 | 193 | 57.3 |
| **8SDX 77/10 6SM** | Rp5 | 1733 | 163 | 180 | 61.2 |
| **8SDX 77/10 8SM** | Rp5 | 1739.5 | 163 | 193 | 61.4 |
| **8SDX 77/11 6SM** | Rp5 | 1861 | 163 | 180 | 65.3 |
| **8SDX 77/11 8SM** | Rp5 | 1867.5 | 163 | 193 | 65.5 |
| **8SDX 77/12 6SM** | Rp5 | 1989 | 163 | 180 | 69.4 |
| **8SDX 77/12 8SM** | Rp5 | 1995.5 | 163 | 193 | 69.5 |
| **8SDX 77/13 8SM** | Rp5 | 2123.5 | 163 | 193 | 73.6 |
| **8SDX 77/14 8SM** | Rp5 | 2251.5 | 163 | 193 | 77.7 |
| **8SDX 77/15 8SM** | Rp5 | 2379.5 | 163 | 193 | 81.8 |
| **8SDX 77/16 8SM** | Rp5 | 2507.5 | 163 | 193 | 85.8 |
| **8SDX 77/17 8SM** | Rp5 | 2635.5 | 163 | 193 | 89.9 |
| **8SDX 77/18 8SM** | Rp5 | 2763.5 | 163 | 193 | 94 |
| **8SDX 77/19 8SM** | Rp5 | 2891.5 | 163 | 193 | 98 |
| **8SDX 77/20 8SM** | Rp5 | 3019.5 | 163 | 193 | 102.1 |

| TYPE | | mm | | | kg |
|---|---|---|---|---|---|
| | DN2 | f | l4 | l5 | Weight |
| **8SDX 95/1 6SM** | Rp5 | 581 | 163 | 180 | 24.5 |
| **8SDX 95/2 6SM** | Rp5 | 709 | 163 | 180 | 28.5 |
| **8SDX 95/3 6SM** | Rp5 | 837 | 163 | 180 | 32.5 |
| **8SDX 95/4 6SM** | Rp5 | 965 | 163 | 180 | 36.5 |
| **8SDX 95/5 6SM** | Rp5 | 1093 | 163 | 180 | 40.5 |
| **8SDX 95/6 6SM** | Rp5 | 1221 | 163 | 180 | 44.5 |
| **8SDX 95/7 6SM** | Rp5 | 1349 | 163 | 180 | 48.5 |
| **8SDX 95/7 8SM** | Rp5 | 1355.5 | 163 | 193 | 48.7 |
| **8SDX 95/8 6SM** | Rp5 | 1477 | 163 | 180 | 52.5 |
| **8SDX 95/8 8SM** | Rp5 | 1483.5 | 163 | 193 | 52.7 |
| **8SDX 95/9 6SM** | Rp5 | 1605 | 163 | 180 | 56.5 |
| **8SDX 95/9 8SM** | Rp5 | 1611.5 | 163 | 193 | 56.7 |
| **8SDX 95/10 6SM** | Rp5 | 1733 | 163 | 180 | 60.5 |
| **8SDX 95/10 8SM** | Rp5 | 1739.5 | 163 | 193 | 60.7 |
| **8SDX 95/11 8SM** | Rp5 | 1867.5 | 163 | 193 | 64.7 |
| **8SDX 95/12 8SM** | Rp5 | 1995.5 | 163 | 193 | 68.7 |
| **8SDX 95/13 8SM** | Rp5 | 2123.5 | 163 | 193 | 72.7 |
| **8SDX 95/14 8SM** | Rp5 | 2251.5 | 163 | 193 | 76.7 |
| **8SDX 95/15 8SM** | Rp5 | 2379.5 | 163 | 193 | 80.7 |
| **8SDX 95/16 8SM** | Rp5 | 2507.5 | 163 | 193 | 84.7 |
| **8SDX 95/17 8SM** | Rp5 | 2635.5 | 163 | 193 | 88.7 |
| **8SDX 95/20 8SM** | Rp5 | 3019.5 | 163 | 193 | 100.7 |

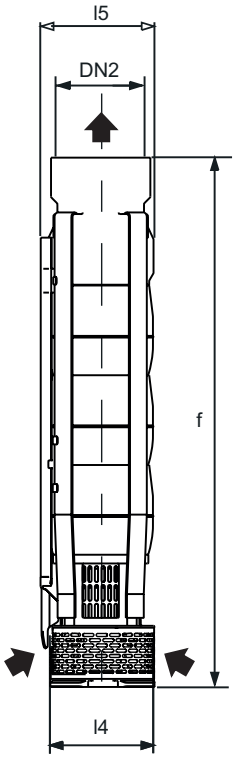


**MOTORS TO CONNECT**
STANDARD coupling flange:
(6SM) NEMA 6, 6” motor;
(8SM) NEMA 8, 8”, 10” motor;
(12SM) C 12 Coupling, 12”, 14” motor;

# SDX

calpeda

## Dimensions and weights

| TYPE | | mm | | | kg |
|---|---|---|---|---|---|
| | DN2 | f | l4 | l5 | Weight |
| 6SDXL 18/6 | G 2 1/2" | 494 | 6" | 144 | 13 |
| 6SDXL 18/7 | G 2 1/2" | 532 | 6" | 144 | 14.4 |
| 6SDXL 18/8 | G 2 1/2" | 569 | 6" | 144 | - |
| 6SDXL 18/9 | G 2 1/2" | 607 | 6" | 144 | 17.2 |
| 6SDXL 18/10 | G 2 1/2" | 644 | 6" | 144 | 16 |
| 6SDXL 18/11 | G 2 1/2" | 682 | 6" | 144 | 17.5 |
| 6SDXL 18/12 | G 2 1/2" | 719 | 6" | 144 | 18.7 |
| 6SDXL 18/13 | G 2 1/2" | 757 | 6" | 144 | 23 |
| 6SDXL 18/14 | G 2 1/2" | 794 | 6" | 144 | 20.2 |
| 6SDXL 18/15 | G 2 1/2" | 832 | 6" | 144 | 21.5 |
| 6SDXL 18/16 | G 2 1/2" | 869 | 6" | 144 | 22.2 |
| 6SDXL 18/17 | G 2 1/2" | 907 | 6" | 144 | 22 |
| 6SDXL 18/18 | G 2 1/2" | 944 | 6" | 144 | 24.5 |
| 6SDXL 18/19 | G 2 1/2" | 982 | 6" | 144 | 25.3 |
| 6SDXL 18/20 | G 2 1/2" | 1019 | 6" | 144 | - |
| 6SDXL 18/21 | G 2 1/2" | 1057 | 6" | 144 | 26 |
| 6SDXL 18/22 | G 2 1/2" | 1094 | 6" | 144 | 22 |
| 6SDXL 18/23 | G 2 1/2" | 1132 | 6" | 144 | 26.5 |
| 6SDXL 18/24 | G 2 1/2" | 1169 | 6" | 144 | 35 |
| 6SDXL 18/25 | G 2 1/2" | 1207 | 6" | 144 | - |
| 6SDXL 18/26 | G 2 1/2" | 1244 | 6" | 144 | 29 |
| 6SDXL 18/27 | G 2 1/2" | 1282 | 6" | 144 | 31 |
| 6SDXL 18/28 | G 2 1/2" | 1319 | 6" | 144 | - |
| 6SDXL 18/29 | G 2 1/2" | 1356 | 6" | 144 | 40 |
| 6SDXL 18/30 | G 2 1/2" | 1394 | 6" | 144 | - |
| 6SDXL 18/31 | G 2 1/2" | 1431 | 6" | 144 | - |
| 6SDXL 18/32 | G 2 1/2" | 1469 | 6" | 144 | 34 |
| 6SDXL 18/33 | G 2 1/2" | 1506 | 6" | 144 | - |
| 6SDXL 18/34 | G 2 1/2" | 1544 | 6" | 144 | 35.7 |
| 6SDXL 18/35 | G 2 1/2" | 1581 | 6" | 144 | 36.3 |
| 6SDXL 18/36 | G 2 1/2" | 1619 | 6" | 144 | 42 |
| 6SDXL 18/37 | G 2 1/2" | 1656 | 6" | 144 | 38.4 |
| 6SDXL 18/38 | G 2 1/2" | 1694 | 6" | 144 | 39.8 |
| 6SDXL 18/39 | G 2 1/2" | 1731 | 6" | 144 | - |
| 6SDXL 18/40 | G 2 1/2" | 1769 | 6" | 144 | - |
| 6SDXL 18/41 | G 2 1/2" | 1806 | 6" | 144 | 41.8 |
| 6SDXL 18/42 | G 2 1/2" | 1844 | 6" | 144 | 48 |
| 6SDXL 18/43 | G 2 1/2" | 1881 | 6" | 144 | 44 |
| 6SDXL 18/44 | G 2 1/2" | 1919 | 6" | 144 | 45 |
| 6SDXL 18/45 | G 2 1/2" | 1956 | 6" | 144 | 46 |
| 6SDXL 18/46 | G 2 1/2" | 1993 | 6" | 144 | 47 |
| 6SDXL 18/47 | G 2 1/2" | 2031 | 6" | 144 | - |
| 6SDXL 18/48 | G 2 1/2" | 2068 | 6" | 144 | 48 |
| 6SDXL 18/49 | G 2 1/2" | 2106 | 6" | 144 | 50 |
| 6SDXL 18/50 | G 2 1/2" | 2143 | 6" | 144 | 61 |
| 6SDXL 18/51 | G 2 1/2" | 2181 | 6" | 144 | 52 |
| 6SDXL 18/52 | G 2 1/2" | 2218 | 6" | 144 | 53 |
| 6SDXL 18/53 | G 2 1/2" | 2256 | 6" | 144 | 54 |
| 6SDXL 18/54 | G 2 1/2" | 2293 | 6" | 144 | 55 |
| 6SDXL 18/55 | G 2 1/2" | 2331 | 6" | 144 | 56 |
| 6SDXL 18/56 | G 2 1/2" | 2368 | 6" | 144 | 57 |
| 6SDXL 18/57 | G 2 1/2" | 2406 | 6" | 144 | 58 |
| 6SDXL 18/58 | G 2 1/2" | 2443 | 6" | 144 | 59 |
| 6SDXL 18/59 | G 2 1/2" | 2481 | 6" | 144 | 65 |
| 6SDXL 18/60 | G 2 1/2" | 2518 | 6" | 144 | - |

| TYPE | | mm | | | kg |
|---|---|---|---|---|---|
| | DN2 | f | l4 | l5 | Weight |
| 6SDXL 30/3 | G 3" | 620 | 6" | 144 | 17 |
| 6SDXL 30/4 | G 3" | 705 | 6" | 144 | 16.8 |
| 6SDXL 30/5 | G 3" | 790 | 6" | 144 | 18.8 |
| 6SDXL 30/6 | G 3" | 876 | 6" | 144 | 21.1 |
| 6SDXL 30/7 | G 3" | 961.5 | 6" | 144 | 23.4 |
| 6SDXL 30/8 | G 3" | 1047 | 6" | 144 | 27 |
| 6SDXL 30/9 | G 3" | 1132 | 6" | 144 | 29 |
| 6SDXL 30/10 | G 3" | 1218 | 6" | 144 | 32 |
| 6SDXL 30/11 | G 3" | 1303 | 6" | 144 | 33 |
| 6SDXL 30/12 | G 3" | 1389 | 6" | 144 | 33.6 |
| 6SDXL 30/13 | G 3" | 1474 | 6" | 144 | 38 |
| 6SDXL 30/14 | G 3" | 1560 | 6" | 144 | 39 |
| 6SDXL 30/15 | G 3" | 1645 | 6" | 144 | 39.9 |
| 6SDXL 30/16 | G 3" | 1730 | 6" | 144 | 49 |
| 6SDXL 30/17 | G 3" | 1816 | 6" | 144 | 46 |
| 6SDXL 30/18 | G 3" | 1901 | 6" | 144 | 45 |
| 6SDXL 30/19 | G 3" | 1987 | 6" | 144 | 48.2 |
| 6SDXL 30/20 | G 3" | 2072 | 6" | 144 | 50.3 |
| 6SDXL 30/21 | G 3" | 2157 | 6" | 144 | 52.4 |
| 6SDXL 30/22 | G 3" | 2243 | 6" | 144 | - |
| 6SDXL 30/23 | G 3" | 2328 | 6" | 144 | - |
| 6SDXL 30/24 | G 3" | 2414 | 6" | 144 | 58.7 |
| 6SDXL 30/25 | G 3" | 2499 | 6" | 144 | 60.8 |
| 6SDXL 30/26 | G 3" | 2584 | 6" | 144 | 62.9 |
| 6SDXL 30/27 | G 3" | 2670 | 6" | 144 | 65 |
| 6SDXL 30/28 | G 3" | 2755 | 6" | 144 | 67.2 |
| 6SDXL 30/29 | G 3" | 2840 | 6" | 144 | - |
| 6SDXL 30/30 | G 3" | 2926 | 6" | 144 | 71.3 |
| 6SDXL 30/31 | G 3" | 3011 | 6" | 144 | 75.2 |
| 6SDXL 30/32 | G 3" | 3096 | 6" | 144 | 78.3 |
| 6SDXL 30/33 | G 3" | 3182 | 6" | 144 | 80.4 |
| 6SDXL 30/34 | G 3" | 3267 | 6" | 144 | 82.5 |
| 6SDXL 30/35 | G 3" | 3352 | 6" | 144 | 84.6 |
| 6SDXL 30/36 | G 3" | 3438 | 6" | 144 | 87.9 |
| 6SDXL 30/37 | G 3" | 3523 | 6" | 144 | 90 |
| 6SDXL 30/38 | G 3" | 3709 | 8" | 191 | 92.3 |
| 6SDXL 30/39 | G 3" | 3794 | 8" | 191 | 94.5 |
| 6SDXL 30/40 | G 3" | 3879 | 8" | 191 | 96.6 |
| 6SDXL 30/41 | G 3" | 3965 | 8" | 191 | 97.6 |
| 6SDXL 30/42 | G 3" | 4050 | 8" | 191 | 98.7 |
| 6SDXL 30/43 | G 3" | 4135 | 8" | 191 | 99.8 |

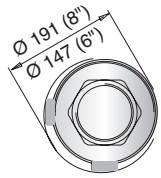


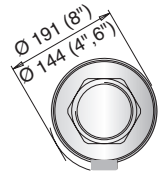


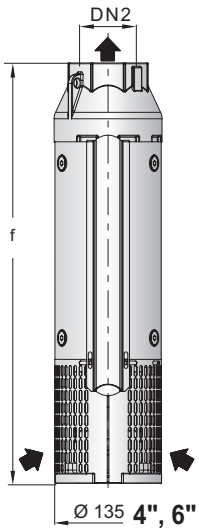


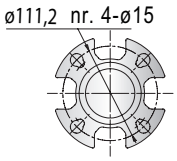


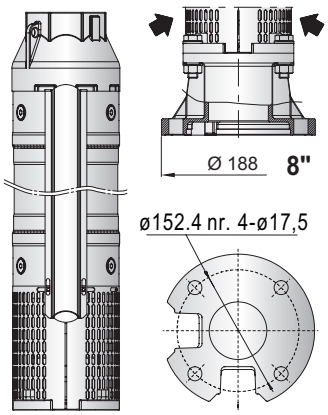


Reinforced with special collar from:
6SDXL 30/36

# SDX

calpeda

## Dimensions and weights

| TYPE | | mm | | | kg |
|---|---|---|---|---|---|
| | DN2 | f | l4 | l5 | Weight |
| 6SDXL 46/2 | G 3" | 594 | 4" | 144 | 14 |
| 6SDXL 46/3 | G 3" | 705 | 6" | 144 | 16.1 |
| 6SDXL 46/4 | G 3" | 819 | 6" | 144 | 19.6 |
| 6SDXL 46/5 | G 3" | 933 | 6" | 144 | 21.4 |
| 6SDXL 46/6 | G 3" | 1047 | 6" | 144 | 24 |
| 6SDXL 46/7 | G 3" | 1161 | 6" | 144 | 29 |
| 6SDXL 46/8 | G 3" | 1275 | 6" | 144 | 31.2 |
| 6SDXL 46/9 | G 3" | 1389 | 6" | 144 | 33.5 |
| 6SDXL 46/10 | G 3" | 1503 | 6" | 144 | 35 |
| 6SDXL 46/11 | G 3" | 1617 | 6" | 144 | 38 |
| 6SDXL 46/12 | G 3" | 1730 | 6" | 144 | 41 |
| 6SDXL 46/13 | G 3" | 1844 | 6" | 144 | - |
| 6SDXL 46/14 | G 3" | 1958 | 6" | 144 | 49 |
| 6SDXL 46/15 | G 3" | 2072 | 6" | 144 | 47.4 |
| 6SDXL 46/16 | G 3" | 2186 | 6" | 144 | 50.1 |
| 6SDXL 46/17 | G 3" | 2300 | 6" | 144 | 120 |
| 6SDXL 46/18 | G 3" | 2414 | 6" | 144 | 58 |
| 6SDXL 46/19 | G 3" | 2527 | 6" | 144 | 58 |
| 6SDXL 46/20 | G 3" | 2641 | 6" | 144 | 58 |
| 6SDXL 46/21 | G 3" | 2755 | 6" | 144 | 63.1 |
| 6SDXL 46/22 | G 3" | 2869 | 6" | 144 | 65.7 |
| 6SDXL 46/23 | G 3" | 2983 | 6" | 144 | 68 |
| 6SDXL 46/24 | G 3" | 3096 | 6" | 144 | 68 |
| 6SDXL 46/25 | G 3" | 3210 | 6" | 144 | - |
| 6SDXL 46/26 | G 3" | 3324 | 6" | 144 | 76.1 |
| 6SDXL 46/27 | G 3" | 3438 | 6" | 144 | 79.3 |
| 6SDXL 46/28 | G 3" | 3552 | 6" | 144 | 82 |
| 6SDXL 46/29 | G 3" | 3665 | 6" | 144 | 87.4 |
| 6SDXL 46/30 | G 3" | 3779 | 6" | 144 | 90 |
| 6SDXL 46/31 | G 3" | 3893 | 6" | 144 | 105 |
| 6SDXL 46/32 | G 3" | 4007 | 6" | 144 | 95.2 |
| 6SDXL 46/33 | G 3" | 4121 | 6" | 144 | 97.8 |
| 6SDXL 46/34 | G 3" | 4335 | 8" | 191 | 101 |
| 6SDXL 46/35 | G 3" | 4449 | 8" | 191 | 103 |
| 6SDXL 46/36 | G 3" | 4562 | 8" | 191 | 106 |
| 6SDXL 46/37 | G 3" | 4676 | 8" | 191 | 109 |
| 6SDXL 46/38 | G 3" | 4790 | 8" | 191 | 111 |
| 6SDXL 46/39 | G 3" | 4904 | 8" | 191 | 114 |
| 6SDXL 46/40 | G 3" | 5018 | 8" | 191 | 117 |

| TYPE | | mm | | | kg |
|---|---|---|---|---|---|
| | DN2 | f | l4 | l5 | Weight |
| 6SDXL 65/2 | G 3" | 592 | 6" | 144 | 13.6 |
| 6SDXL 65/3 | G 3" | 705 | 6" | 144 | 16.1 |
| 6SDXL 65/4 | G 3" | 819 | 6" | 144 | 19 |
| 6SDXL 65/5 | G 3" | 933 | 6" | 144 | 21.5 |
| 6SDXL 65/6 | G 3" | 1047 | 6" | 144 | 24 |
| 6SDXL 65/7 | G 3" | 1161 | 6" | 144 | 27.8 |
| 6SDXL 65/8 | G 3" | 1275 | 6" | 144 | 31 |
| 6SDXL 65/9 | G 3" | 1389 | 6" | 144 | 34 |
| 6SDXL 65/10 | G 3" | 1503 | 6" | 144 | 34.5 |
| 6SDXL 65/11 | G 3" | 1617 | 6" | 144 | 38.5 |
| 6SDXL 65/12 | G 3" | 1730 | 6" | 144 | 39.7 |
| 6SDXL 65/13 | G 3" | 1844 | 6" | 144 | 43.5 |
| 6SDXL 65/14 | G 3" | 1958 | 6" | 144 | 44.9 |
| 6SDXL 65/15 | G 3" | 2072 | 6" | 144 | - |
| 6SDXL 65/16 | G 3" | 2186 | 6" | 144 | - |
| 6SDXL 65/17 | G 3" | 2300 | 6" | 144 | 56 |
| 6SDXL 65/18 | G 3" | 2414 | 6" | 144 | 55.4 |
| 6SDXL 65/19 | G 3" | 2527 | 6" | 144 | - |
| 6SDX6 65/20 | G 3" | 2641 | 6" | 144 | - |
| 6SDXL 65/21 | G 3" | 2755 | 6" | 144 | - |
| 6SDXL 65/22 | G 3" | 2869 | 6" | 144 | 68.7 |
| 6SDXL 65/23 | G 3" | 2983 | 6" | 144 | - |
| 6SDXL 65/24 | G 3" | 3096 | 6" | 144 | - |
| 6SDXL 65/25 | G 3" | 3210 | 6" | 144 | 76.5 |
| 6SDXL 65/26 | G 3" | 3324 | 6" | 144 | - |
| 6SDXL 65/27 | G 3" | 3538 | 8" | 191 | 82.6 |
| 6SDXL 65/28 | G 3" | 3652 | 8" | 191 | 85.3 |
| 6SDXL 65/29 | G 3" | 3765 | 8" | 191 | - |
| 6SDXL 65/30 | G 3" | 3879 | 8" | 191 | 90.5 |
| 6SDXL 65/31 | G 3" | 3993 | 8" | 191 | - |

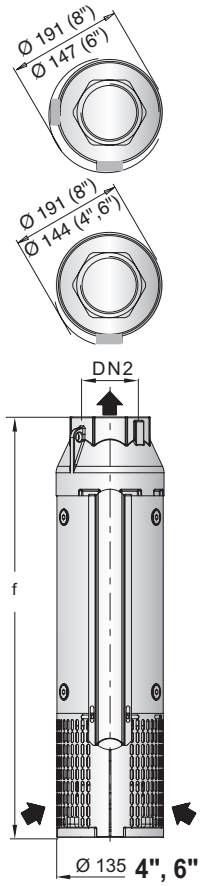


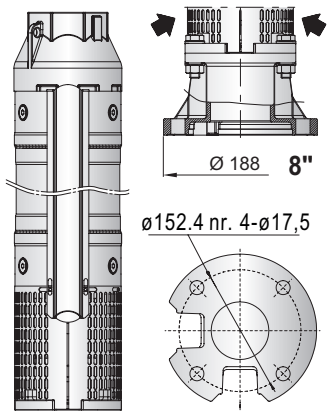


Reinforced with special collar from:
6SDXL 46/27
6SDXL 65/27

# SDX

calpeda

## Dimensions and weights

| TYPE | | mm | | kg |
|---|---|---|---|---|
| | DN2 | f | l4 | Weight |
| 8SDXL 78/2 | G 5" | 644 | 6" | 47 |
| 8SDXL 78/3 | G 5" | 770 | 6" | 37 |
| 8SDXL 78/4 | G 5" | 896 | 6" | - |
| 8SDXL 78/5 | G 5" | 1022 | 6" | 49 |
| 8SDXL 78/6 | G 5" | 1148 | 6" | 52 |
| 8SDXL 78/7 | G 5" | 1274 | 6" | - |
| 8SDX6 78/8 | G 5" | 1400 | 6" | - |
| 8SDXL 78/9 | G 5" | 1526 | 6" | - |
| 8SDXL 78/10 | G 5" | 1652 | 6" | - |
| 8SDXL 78/11 | G 5" | 1778 | 6" | - |
| 8SDXL 78/12 | G 5" | 1909 | 6" | 90 |
| 8SDXL 78/13 | G 5" | 2035 | 8" | - |
| 8SDXL 78/14 | G 5" | 2161 | 8" | - |
| 8SDXL 78/15 | G 5" | 2287 | 8" | - |
| 8SDXL 78/16 | G 5" | 2413 | 8" | - |
| 8SDXL 78/17 | G 5" | 2539 | 8" | - |
| 8SDXL 78/18 | G 5" | 2665 | 8" | - |
| 8SDXL 78/19 | G 5" | 2791 | 8" | - |
| 8SDXL 78/20 | G 5" | 2917 | 8" | - |
| 8SDXL 78/21 | G 5" | 3043 | 8" | - |
| 8SDXL 78/22 | G 5" | 3169 | 8" | - |
| 8SDXL 78/23 | G 5" | 3295 | 8" | - |
| 8SDXL 78/24 | G 5" | 3421 | 8" | - |

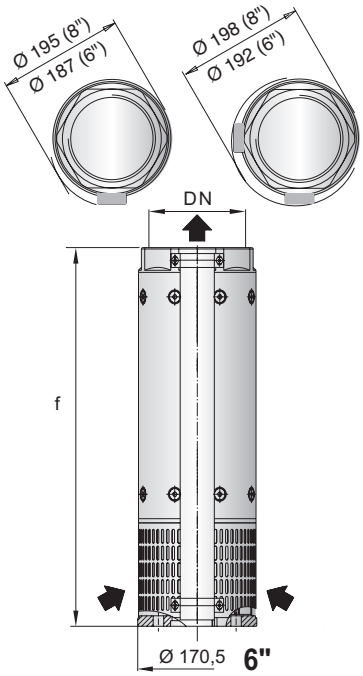


| TYPE | | mm | | kg |
|---|---|---|---|---|
| | DN2 | f | l4 | Weight |
| 8SDXL 97/2 | G 5" | 644 | 6" | 36 |
| 8SDXL 97/3 | G 5" | 770 | 6" | 40 |
| 8SDXL 97/4 | G 5" | 896 | 6" | 45 |
| 8SDXL 97/5 | G 5" | 1022 | 6" | - |
| 8SDXL 97/6 | G 5" | 1148 | 6" | - |
| 8SDXL 97/7 | G 5" | 1274 | 6" | 56.5 |
| 8SDXL 97/8 | G 5" | 1526 | 6" | - |
| 8SDXL 97/9 | G 5" | 1526 | 6" | - |
| 8SDXL 97/10 | G 5" | 1657 | 6" | - |
| 8SDXL 97/11 | G 5" | 1783 | 8" | - |
| 8SDXL 97/12 | G 5" | 1909 | 8" | - |
| 8SDXL 97/13 | G 5" | 2035 | 8" | - |
| 8SDXL 97/14 | G 5" | 2161 | 8" | - |
| 8SDXL 97/15 | G 5" | 2287 | 8" | - |
| 8SDXL 97/16 | G 5" | 2413 | 8" | - |
| 8SDXL 97/17 | G 5" | 2539 | 8" | - |
| 8SDXL 97/18 | G 5" | 2665 | 8" | - |
| 8SDXL 97/19 | G 5" | 2791 | 8" | - |
| 8SDXL 97/20 | G 5" | 2917 | 8" | - |
| 8SDXL 97/21 | G 5" | 3043 | 8" | - |
| 8SDXL 97/22 | G 5" | 3169 | 8" | - |
| 8SDXL 97/23 | G 5" | 3295 | 10" | - |

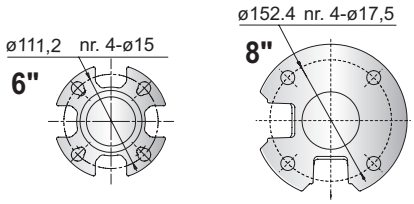

ed. 03/2025

# SDS

calpeda®

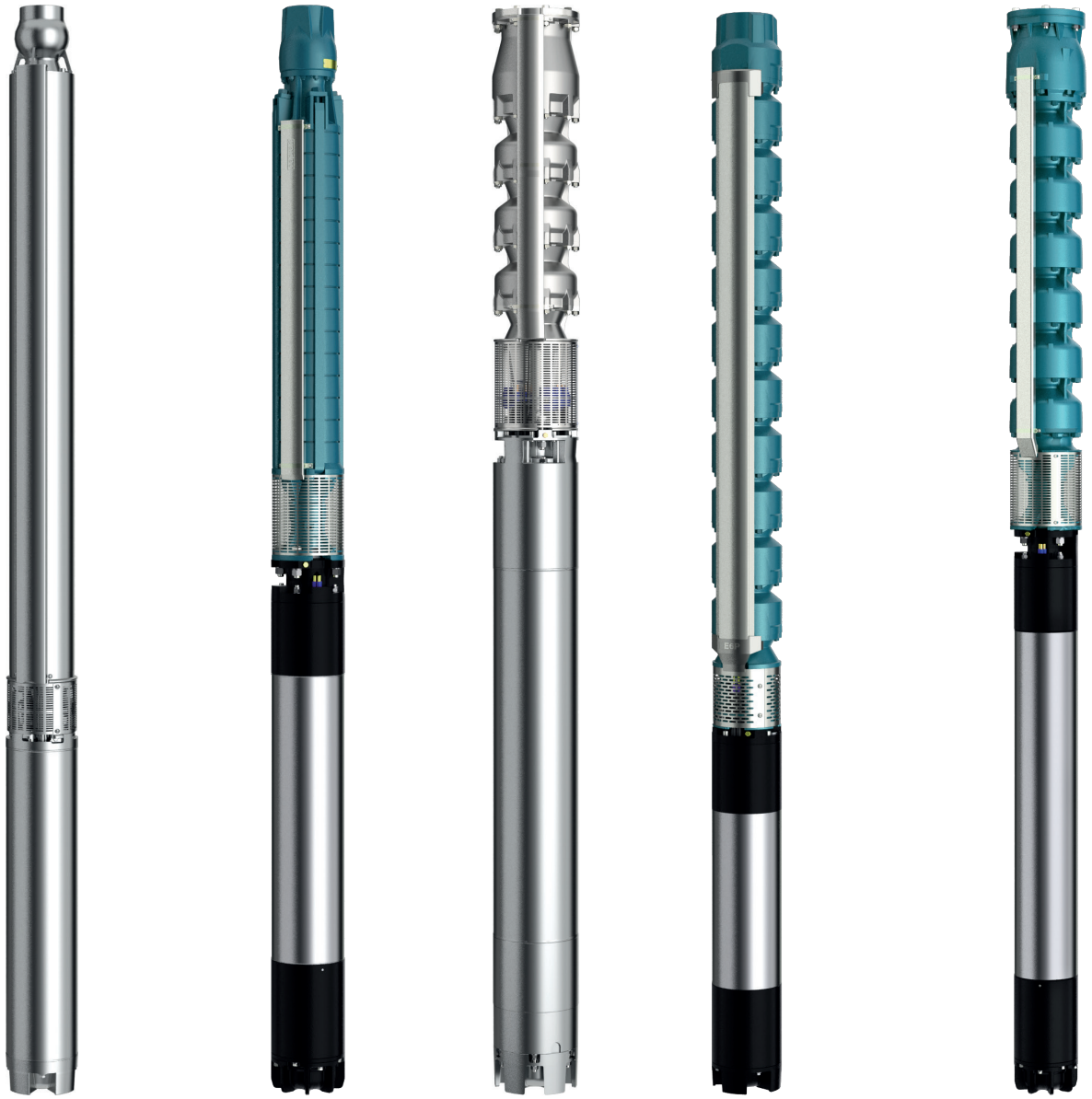

# Submersible borehole pumps for 6”, 8”, 10”, 12”, 14”, 18”

# SDS

calpeda®

## Construction

Submersible borehole pumps for 6” wells (DN 150 mm), 8” (DN 200 mm) e 10" (DN 250 mm), 12” (DN 300 mm), 14” (DN 350 mm), 18” (DN 450 mm), with stages in cast iron or in steel, (on request).

**Impellers**
- Semiaxal SDS
- radial SDR

**Connection:**
Threaded ISO 228 for SDS 6,8" - SDR 8,10", I-SDS 8,10", I-SDR 6"
Flanged with counter-flange for welding for SDS 10, 12, 14, 18", I-SDS 12"

Delivery casing with built-in non-return valve.

## Applications

For water supply systems.
For civil and industrial applications.
For fire fighting applications.
For irrigation.

## Operating conditions

Liquid temperature:
up to a 25 °C.
Maximum amount of sand in the water:
- 100 g/m3 SDS 6,8"
- 40 g/m3 SDS 10,12,14,18"
- 150 g/m3 I-SDS 6,8,10", I-SDR 6"

Continuous duty.

## Designation

Example: -10 SDS 64 / 2 A 8SM
I = special features in stainless steel(on request)
10 = Well diameter in inches
SDS = Series
64 = Stage identification
2 = Number of stages
A = Impeller size
8SM = Motor flange coupling

## Motor

2-pole induction motor, 50 Hz (n ≈ 2900 rpm).
Sized for connection to the pumps according to NEMA Standards (10”, 12" excluded).
Standard voltages:
single-phase 230 V - up to 2,2 kW for 4” motors.
three-phase 230 V; 400 V, for 4” motors.
400 V; 400/690 V for 6", 8", 10", 12" motors.
Voltage tolerance : ± 10%
In order to limit both current and torque at each starting, for rated motor powers equal to or higher than 7.5 kW, one of the following types of starting is necessary: star/delta, soft starter, stator impedance or autotransformer.
Insulation class: - F for motors 4"

Protection IP 68.
Installation below water level: 100 m for 4”, 150 m for 6”, 500 m for 8,10” 4” motor
Motor suitable operation with frequency converter (with suitable filter dv/dt).
Horizontal installation (6" 37-45kW, 8" 92kW, 10" 170-190 kW excluded)

| Motor | Motor P2 | Max. Liquid temperature | Cooling minimum flow velocity | Max n° of starting x hour |
|---|---|---|---|---|
| 4CS-R | all | 35 °C | 0,1 m/s | 30 |
| 6CS-R | 4÷15 kW | 40 °C | 0,5 m/s | 20 |
| 6CS-R | 18,5÷30 kW | 35 °C | 0,5 m/s | 20 |
| 6CS-R | 37 kW | 30 °C | 0,5 m/s | 20 |
| 8CS-R | 30÷45 kW | 30 °C | 0,2 m/s | 10 |
| 8CS-R | 51 kW | 30 °C | 0,2 m/s | 8 |
| 8CS-R | 59÷75 kW | 30 °C | 0,5 m/s | 8 |
| 8CS-R | 92÷110 kW | 30 °C | 0,5 m/s | 6 |
| 10CS-R | all | 25 °C | 0,5 m/s | 6 |
| 12CS-R | all | 25 °C | 0,5 m/s | 5 |

## Special features on request

Other voltages.
Frequency 60 Hz (as per 60 Hz data sheet).
Other temperatures.
Impeller in stainless steel
Encapsulated motor FK series.

## Materials

| **Components** | **6, 8, 10, 12, 14, 18 SDS** | **8, 10 SDSR** | **I-6, I-8, I-10, I-12 SDS** | **I-6, SDR** |
|---|---|---|---|---|
| Stage casing | Cast iron | Cast iron | Steel (AISI 316) | Steel (AISI 316) |
| Diffuser | Cast iron | Cast iron | Steel (AISI 316) | Steel (AISI 316) |
| External jacket | - | - | - | Steel (AISI 304) |
| Impeller | Cast Iron (Stainless Steel for 14" and 18SDS 64) | Cast iron (NORYL 8-SDR) | Stainless steel | Stainless steel |
| Wear ring | - | - | Acciaio inox/Gomma | Acciaio inox/Gomma |
| Shaft | Stainless steel | Stainless steel | Steel AISI F51duplex | Steel AISI F51duplex |
| Bronzina | Bronze | Bronze | - | - |
| delivery casing | Cast iron | Cast iron | Stainless steel | Stainless steel |
| Suction lantern | Cast iron | Cast iron | Stainless steel | Stainless steel |
| Stage bearing | Steel (AISI 316)/NBR | Steel (AISI 316)/NBR | Stainless steel | Rubber |
| Filter | Steel (AISI 304) | Steel (AISI 304) | Stainless steel | Stainless steel |
| Screws | Steel | Steel | Stainless steel | Stainless steel |

**Attention for complete materials refer to the Pump Selector on the Calpeda website**

# SDS

calpeda

## Coverage chart n ≈ 2900 rpm

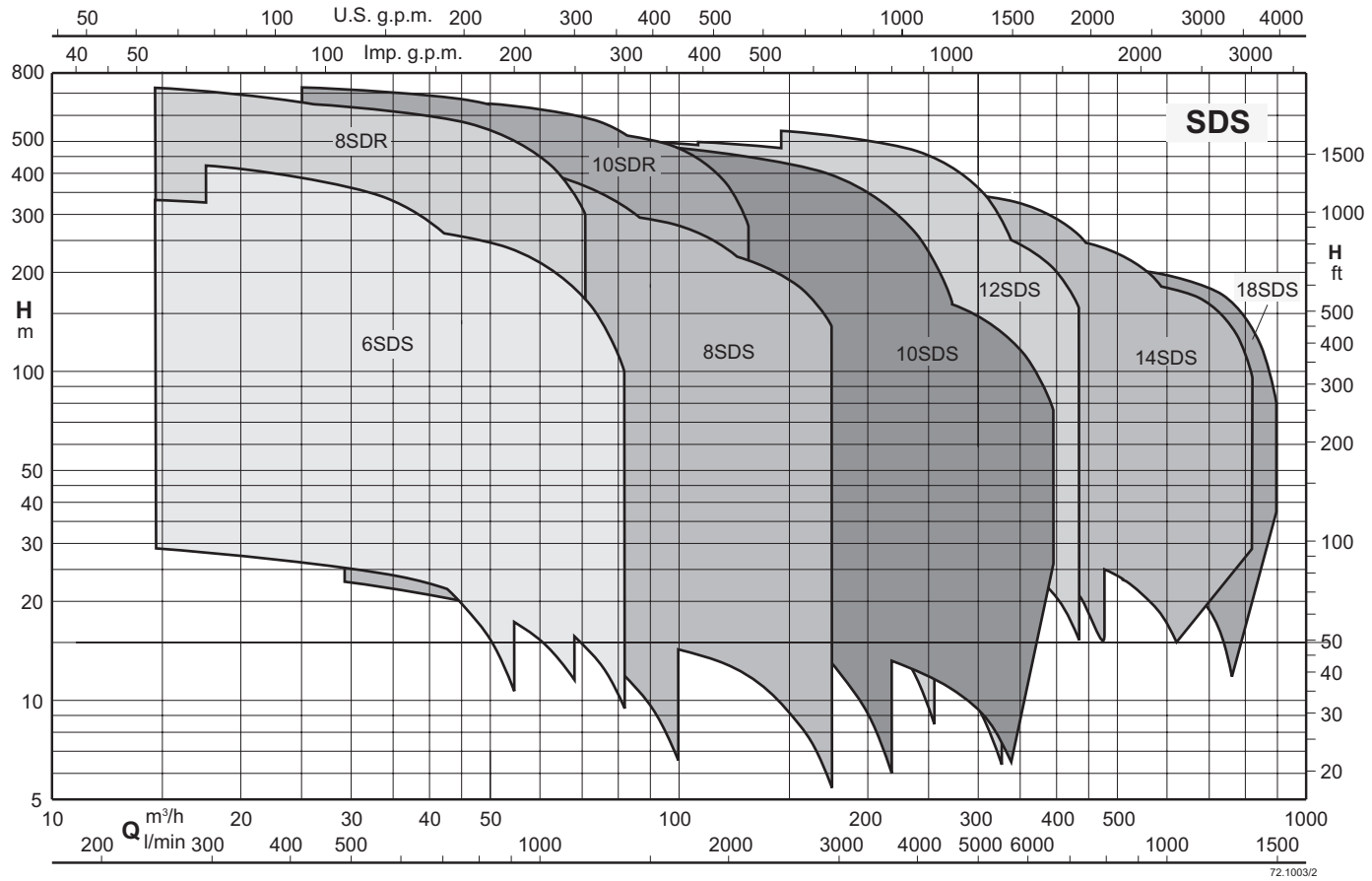


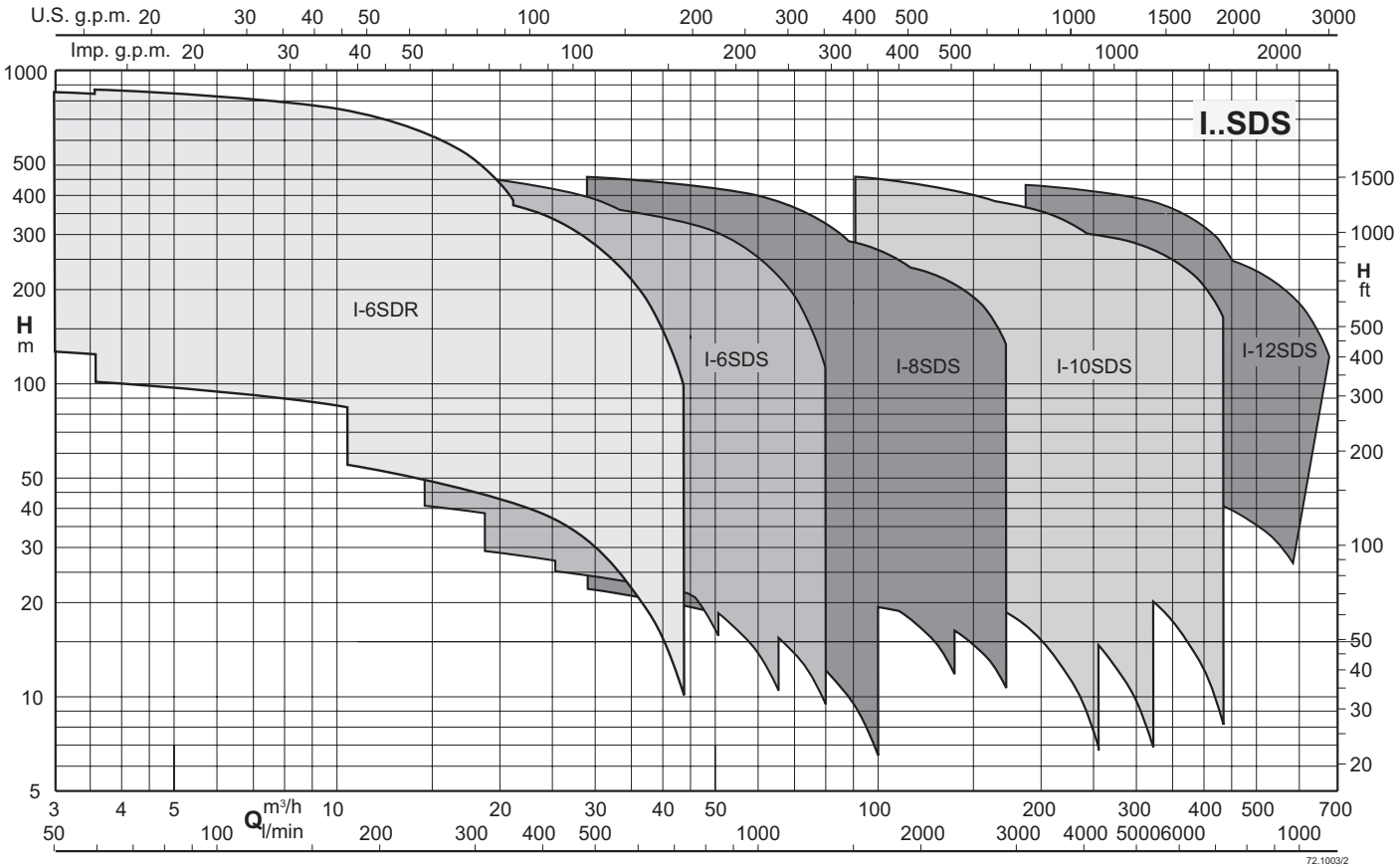

# SDS

calpeda®

## Coverage chart n ≈ 2900 rpm

| Model | P2 | | Q = Flow | | | | | | | | | | | | | | | | |
|---|---|---|---|---|---|---|---|---|---|---|---|---|---|---|---|---|---|---|---|
| | | | m³/h | 0 | 18 | 20 | 22 | 24 | 26 | 28 | 30 | 32 | 34 | 36 | 38 | 40 | 42 | 44 | 46 |
| | | | l/min | | 300 | 333 | 367 | 400 | 433 | 467 | 500 | 533 | 567 | 600 | 633 | 667 | 700 | 733 | 767 |
| | kW | HP | H (m) = Total head | | | | | | | | | | | | | | | | |
| 6SDS 35/3I 6SM | 4 | 5,5 | | 40,2 | 37,6 | 37,3 | 36,8 | 36,3 | 35,6 | 34,8 | 33,9 | 32,9 | 31,7 | 30,3 | 28,8 | 27,1 | 25,2 | 23,1 | 20,8 |
| 6SDS 35/4I 6SM | 5.5 | 7.5 | | 54 | 50,4 | 49,9 | 49,2 | 48,4 | 47,5 | 46,4 | 45,2 | 43,8 | 42,1 | 40,3 | 38,2 | 35,9 | 33,4 | 30,6 | 27,5 |
| 6SDS 35/6L 6SM | 7.5 | 10 | | 77,5 | 72,3 | 71,5 | 70,5 | 69,3 | 67,9 | 66,3 | 64,4 | 62,2 | 59,7 | 56,8 | 53,7 | 50,1 | 46,2 | 41,9 | 37,2 |
| 6SDS 35/7N 6SM | 9,2 | 12,5 | | 94,4 | 88,2 | 87,3 | 86,3 | 85 | 83,5 | 81,7 | 79,6 | 77,2 | 74,4 | 71,3 | 67,8 | 63,8 | 59,4 | 54,5 | 49 |
| 6SDS 35/8A 6SM | 11 | 15 | | 111 | 105 | 104 | 102 | 101 | 98,7 | 96,6 | 94,2 | 91,5 | 88,4 | 84,8 | 80,7 | 76,2 | 71,2 | 65,6 | 59,6 |
| 6SDS 35/10M 6SM | 13 | 17,5 | | 134 | 125 | 124 | 122 | 121 | 118 | 116 | 113 | 109 | 105 | 99,7 | 94,4 | 88,5 | 82 | 74,9 | 67,2 |
| 6SDS 35/11I 6SM | 15 | 20 | | 151 | 142 | 140 | 139 | 137 | 134 | 131 | 128 | 124 | 120 | 115 | 109 | 103 | 95,6 | 87,8 | 79,3 |
| 6SDS 35/12A 6SM | 18.5 | 25 | | 167 | 157 | 155 | 153 | 151 | 148 | 145 | 142 | 137 | 132 | 127 | 120 | 113 | 106 | 97 | 88,1 |
| 6SDS 35/14M 6SM | 18.5 | 25 | | 189 | 176 | 174 | 172 | 169 | 166 | 162 | 158 | 153 | 147 | 141 | 134 | 126 | 117 | 107 | 95,8 |
| 6SDS 35/15A 6SM | 22 | 30 | | 208 | 196 | 194 | 191 | 189 | 186 | 182 | 177 | 172 | 166 | 159 | 151 | 142 | 132 | 122 | 110 |
| 6SDS 35/16A 6SM | 22 | 30 | | 222 | 208 | 206 | 203 | 201 | 197 | 193 | 188 | 183 | 176 | 168 | 160 | 150 | 139 | 128 | 116 |
| 6SDS 35/17A 6SM | 26 | 35 | | 237 | 223 | 221 | 218 | 215 | 212 | 208 | 203 | 197 | 190 | 182 | 172 | 162 | 151 | 138 | 125 |
| 6SDS 35/19A 6SM | 26 | 35 | | 264 | 247 | 245 | 242 | 239 | 235 | 229 | 223 | 216 | 208 | 199 | 189 | 178 | 166 | 153 | 139 |
| 6SDS 35/21A 6SM | 30 | 40 | | 292 | 272 | 269 | 266 | 262 | 257 | 252 | 246 | 239 | 231 | 221 | 211 | 199 | 185 | 171 | 154 |
| 6SDS 35/22A 6SM | 30 | 40 | | 305 | 285 | 282 | 279 | 275 | 270 | 264 | 257 | 249 | 239 | 229 | 217 | 204 | 190 | 175 | 158 |
| 6SDS 35/24A 6SM | 37 | 50 | | 333 | 312 | 309 | 305 | 300 | 295 | 289 | 281 | 273 | 263 | 251 | 239 | 224 | 209 | 192 | 174 |
| 6SDS 35/25A 6SM | 37 | 50 | | 346 | 324 | 321 | 317 | 312 | 307 | 300 | 292 | 283 | 272 | 260 | 247 | 232 | 216 | 199 | 181 |
| 6SDS 35/27A 6SM | 37 | 50 | | 374 | 347 | 343 | 338 | 333 | 327 | 320 | 311 | 302 | 291 | 278 | 264 | 248 | 231 | 212 | 191 |
| 6SDS 35/30A 6SM | 45 | 60 | | 415 | 388 | 384 | 379 | 373 | 366 | 358 | 349 | 339 | 326 | 313 | 297 | 280 | 260 | 240 | 217 |
| 6SDS 35/32A 6SM | 45 | 60 | | 442 | 411 | 407 | 401 | 395 | 387 | 379 | 369 | 357 | 344 | 330 | 313 | 295 | 275 | 253 | 229 |

| Model | P2 | | Q = Flow | | | | | | | | | | | | | |
|---|---|---|---|---|---|---|---|---|---|---|---|---|---|---|---|---|
| | | | m³/h | 0 | 18 | 20 | 22 | 24 | 26 | 28 | 30 | 35 | 40 | 45 | 50 | 55 |
| | | | l/min | | 300 | 333 | 367 | 400 | 433 | 467 | 500 | 583 | 667 | 750 | 833 | 917 |
| | kW | HP | H (m) = Total head | | | | | | | | | | | | | |
| 6SDS 45/2I 6SM | 4 | 5,5 | | 30,7 | 28,8 | 28,6 | 28,4 | 28,2 | 27,9 | 27,6 | 27,3 | 26,2 | 24,8 | 23,1 | 21,2 | 18,9 |
| 6SDS 45/3A 6SM | 7.5 | 10 | | 48,6 | 45,9 | 45,6 | 45,3 | 45 | 44,7 | 44,3 | 43,9 | 42,5 | 40,6 | 38,1 | 35,2 | 31,9 |
| 6SDS 45/3N 6SM | 5.5 | 7.5 | | 44,8 | 41,8 | 41,5 | 41,2 | 40,8 | 40,4 | 39,9 | 39,4 | 37,7 | 35,4 | 32,7 | 29,5 | 26 |
| 6SDS 45/4N 6SM | 7.5 | 10 | | 61 | 57,1 | 56,7 | 56,2 | 55,7 | 55,2 | 54,6 | 53,9 | 51,8 | 49,1 | 45,6 | 41,5 | 36,8 |
| 6SDS 45/5U 6SM | 9,2 | 12,5 | | 75,5 | 70,5 | 69,9 | 69,2 | 68,5 | 67,7 | 66,9 | 66 | 63,4 | 60 | 55,8 | 50,4 | 43,6 |
| 6SDS 45/6P 6SM | 11 | 15 | | 91,3 | 85,2 | 84,6 | 83,9 | 83,2 | 82,4 | 81,5 | 80,5 | 77,5 | 73,6 | 68,7 | 62,7 | 55,3 |
| 6SDS 45/7A 6SM | 15 | 20 | | 113 | 106 | 106 | 105 | 104 | 103 | 103 | 101 | 97,6 | 93 | 87,3 | 80,4 | 72,6 |
| 6SDS 45/7L 6SM | 13 | 17,5 | | 106 | 98,7 | 98 | 97,2 | 96,4 | 95,4 | 94,3 | 93,1 | 89,3 | 84,3 | 78,2 | 71,1 | 63,1 |
| 6SDS 45/8A 6SM | 18.5 | 25 | | 128 | 121 | 120 | 119 | 118 | 118 | 116 | 115 | 112 | 106 | 99,5 | 91,6 | 82,7 |
| 6SDS 45/9A 6SM | 18.5 | 25 | | 144 | 135 | 134 | 133 | 132 | 131 | 130 | 129 | 124 | 119 | 111 | 102 | 91,8 |
| 6SDS 45/11I 6SM | 22 | 30 | | 174 | 163 | 162 | 161 | 160 | 158 | 157 | 155 | 149 | 142 | 133 | 123 | 110 |
| 6SDS 45/13I 6SM | 26 | 35 | | 206 | 194 | 192 | 191 | 189 | 188 | 186 | 184 | 178 | 170 | 159 | 146 | 132 |
| 6SDS 45/14A 6SM | 30 | 40 | | 224 | 210 | 209 | 207 | 206 | 204 | 202 | 200 | 194 | 185 | 174 | 160 | 144 |
| 6SDS 45/16A 6SM | 37 | 50 | | 256 | 241 | 239 | 237 | 236 | 234 | 231 | 229 | 221 | 211 | 198 | 182 | 164 |
| 6SDS 45/18A 6SM | 37 | 50 | | 287 | 269 | 267 | 265 | 263 | 261 | 258 | 255 | 246 | 234 | 219 | 202 | 182 |
| 6SDS 45/20A 6SM | 45 | 60 | | 319 | 299 | 298 | 296 | 294 | 291 | 289 | 286 | 276 | 263 | 246 | 226 | 203 |
| 6SDS 45/22A 6SM | 45 | 60 | | 350 | 327 | 325 | 322 | 319 | 317 | 313 | 310 | 299 | 284 | 265 | 243 | 218 |

**P2:** Rated motor power output.
**H:** Total head in m

# SDS

calpeda®

## Coverage chart n ≈ 2900 rpm

| Model | P2 | | Q = Flow | | | | | | | | | | | |
|---|---|---|---|---|---|---|---|---|---|---|---|---|---|---|
| | | | m³/h | 0 | 28,8 | 35 | 40 | 45 | 50 | 55 | 60 | 65 | 70 | 75 | 81 |
| | | | l/min | | 480 | 583 | 667 | 750 | 833 | 917 | 1000 | 1080 | 1170 | 1250 | 1350 |
| | kW | HP | H (m) = Total head | | | | | | | | | | | | |
| 6SDS 55/2A 6SM | 4 | 5,5 | | 28,7 | 25,1 | 24,4 | 23,6 | 22,7 | 21,6 | 20,2 | 18,6 | 16,7 | 14,6 | 12,4 | 9,5 |
| 6SDS 55/3I 6SM | 5.5 | 7.5 | | 40,8 | 35,5 | 34,2 | 33 | 31,6 | 29,9 | 27,8 | 25,4 | 22,6 | 19,4 | 15,7 | 10,6 |
| 6SDS 55/4A 6SM | 7.5 | 10 | | 57,3 | 49,8 | 47,8 | 46 | 44 | 41,7 | 39 | 35,9 | 32,3 | 28,2 | 23,7 | 17,9 |
| 6SDS 55/5I 6SM | 9,2 | 12,5 | | 69,4 | 61 | 59 | 57 | 54,6 | 51,8 | 48,4 | 44,3 | 39,7 | 34,3 | 28,1 | 19,2 |
| 6SDS 55/6I 6SM | 11 | 15 | | 83,6 | 73,4 | 70,7 | 68,2 | 65,1 | 61,6 | 57,3 | 52,4 | 46,8 | 40,4 | 33,2 | 23,3 |
| 6SDS 55/7I 6SM | 13 | 17,5 | | 97,8 | 85,6 | 82,5 | 79,7 | 76,3 | 72,4 | 67,6 | 61,8 | 55 | 47,2 | 38,4 | 27,2 |
| 6SDS 55/8I 6SM | 15 | 20 | | 112 | 98,1 | 94,4 | 91 | 87,2 | 82,8 | 77,4 | 71 | 63,4 | 54,5 | 44,5 | 31,7 |
| 6SDS 55/9A 6SM | 18.5 | 25 | | 128 | 113 | 109 | 106 | 102 | 96,3 | 90,2 | 83 | 74,5 | 65 | 54,5 | 41 |
| 6SDS 55/10A 6SM | 18.5 | 25 | | 142 | 124 | 120 | 115 | 110 | 104 | 97 | 88,9 | 79,8 | 69,6 | 58,5 | 44 |
| 6SDS 55/12N 6SM | 22 | 30 | | 167 | 146 | 141 | 136 | 130 | 123 | 115 | 105 | 92,8 | 79,8 | 64,9 | 43,9 |
| 6SDS 55/13A 6SM | 26 | 35 | | 185 | 164 | 159 | 154 | 148 | 141 | 132 | 121 | 108 | 94,1 | 79,1 | 59,7 |
| 6SDS 55/14A 6SM | 26 | 35 | | 199 | 175 | 169 | 164 | 157 | 149 | 139 | 128 | 115 | 99,7 | 83,8 | 63,2 |
| 6SDS 55/15A 6SM | 30 | 40 | | 213 | 187 | 181 | 176 | 169 | 160 | 150 | 137 | 123 | 107 | 89,2 | 67,2 |
| 6SDS 55/16A 6SM | 30 | 40 | | 226 | 199 | 192 | 186 | 179 | 170 | 159 | 145 | 130 | 113 | 94,5 | 70,9 |
| 6SDS 55/17A 6SM | 37 | 50 | | 242 | 213 | 206 | 200 | 192 | 182 | 170 | 156 | 140 | 122 | 103 | 76,7 |
| 6SDS 55/19A 6SM | 37 | 50 | | 269 | 235 | 227 | 220 | 211 | 201 | 187 | 172 | 153 | 133 | 110 | 81,5 |
| 6SDS 55/21A 6SM | 45 | 60 | | 298 | 262 | 254 | 246 | 236 | 224 | 210 | 193 | 173 | 150 | 126 | 94,2 |
| 6SDS 55/23A 6SM | 45 | 60 | | 325 | 284 | 275 | 266 | 255 | 242 | 226 | 208 | 186 | 162 | 135 | 100 |

| Model | P2 | | Q = Flow | | | | | | | | | | | |
|---|---|---|---|---|---|---|---|---|---|---|---|---|---|---|
| | | | m³/h | 0 | 28,8 | 35 | 40 | 45 | 50 | 60 | 70 | 80 | 90 | 96 |
| | | | l/min | | 480 | 583 | 667 | 750 | 833 | 1000 | 1170 | 1330 | 1500 | 1600 |
| | kW | HP | H (m) = Total head | | | | | | | | | | | |
| 8SDS 65/1D 6SM | 4 | 5,5 | | 24,9 | 22,7 | 22,2 | 21,8 | 21,2 | 20,4 | 18,6 | 16,2 | 13,4 | 10,2 | 8 |
| 8SDS 65/1A 6SM | 5.5 | 7.5 | | 29,4 | 26,8 | 26,3 | 25,9 | 25,3 | 24,7 | 23,2 | 21,1 | 18,5 | 15,5 | 13,3 |
| 8SDS 65/2T 6SM | 7.5 | 10 | | 47,5 | 43,3 | 42,2 | 41,2 | 39,9 | 38,4 | 34,7 | 30 | 24,4 | 17,5 | 12,1 |
| 8SDS 65/2C 6SM | 9,2 | 12,5 | | 54,3 | 49,5 | 48,5 | 47,6 | 46,4 | 45,1 | 41,7 | 37,1 | 31,6 | 25,1 | 20,6 |
| 8SDS 65/2A 6SM | 11 | 15 | | 58,7 | 53,5 | 52,5 | 51,7 | 50,7 | 49,5 | 46,5 | 42,5 | 37,4 | 31,2 | 26,9 |
| 8SDS 65/3K 6SM | 15 | 20 | | 84,9 | 78,1 | 76,4 | 75 | 73,3 | 71,4 | 66,6 | 60,4 | 52,6 | 43,3 | 37,2 |
| 8SDS 65/3JD 6SM | 13 | 17,5 | | 78,6 | 71,9 | 70,2 | 68,7 | 67 | 65 | 59,9 | 53,1 | 44,6 | 34,1 | 26,8 |
| 8SDS 65/3E 6SM | 11 | 15 | | 67,7 | 62,5 | 61,1 | 59,7 | 57,9 | 55,7 | 50,1 | 42,7 | 33,8 | 23,2 | 15,9 |
| 8SDS 65/4JC 6SM | 18.5 | 25 | | 110 | 101 | 98,4 | 96,3 | 94,1 | 91,5 | 85 | 76,5 | 65,7 | 53 | 44,7 |
| 8SDS 65/4A 6SM | 22 | 30 | | 117 | 108 | 105 | 103 | 101 | 98 | 91,9 | 83,9 | 73,4 | 60,4 | 51,8 |
| 8SDS 65/5KC 6SM | 22 | 30 | | 132 | 122 | 120 | 118 | 115 | 111 | 103 | 90,4 | 76,1 | 58,8 | 46,2 |
| 8SDS 65/5A 6SM | 26 | 35 | | 146 | 134 | 132 | 130 | 127 | 124 | 117 | 106 | 92,3 | 76,1 | 65,3 |
| 8SDS 65/6U 6SM | 30 | 40 | | 170 | 156 | 152 | 149 | 146 | 143 | 134 | 122 | 105 | 83,7 | 70,2 |
| 8SDS 65/6U 8SM | 30 | 40 | | 171 | 158 | 155 | 152 | 149 | 146 | 136 | 123 | 107 | 87,1 | 74 |
| 8SDS 65/6C 6SM | 30 | 40 | | 162 | 149 | 146 | 144 | 141 | 137 | 128 | 114 | 96 | 75,4 | 61,7 |
| 8SDS 65/6C 8SM | 30 | 40 | | 163 | 151 | 148 | 146 | 143 | 139 | 129 | 116 | 98,8 | 78,9 | 65,4 |
| 8SDS 65/7A 6SM | 37 | 50 | | 204 | 187 | 183 | 180 | 176 | 172 | 161 | 147 | 128 | 106 | 90,2 |
| 8SDS 65/7A 8SM | 37 | 50 | | 205 | 189 | 186 | 183 | 179 | 176 | 166 | 152 | 133 | 110 | 94 |
| 8SDS 65/9T 6SM | 45 | 60 | | 250 | 230 | 225 | 220 | 215 | 210 | 195 | 176 | 151 | 118 | 93,3 |
| 8SDS 65/9T 8SM | 45 | 60 | | 253 | 234 | 230 | 226 | 222 | 217 | 202 | 183 | 158 | 127 | 103 |
| 8SDS 65/10Z 8SM | 51 | 70 | | 287 | 265 | 260 | 256 | 251 | 245 | 230 | 208 | 181 | 148 | 126 |
| 8SDS 65/11A 8SM | 59 | 80 | | 324 | 298 | 293 | 289 | 283 | 277 | 262 | 240 | 211 | 175 | 150 |
| 8SDS 65/12A 8SM | 66 | 90 | | 353 | 325 | 319 | 314 | 309 | 302 | 285 | 261 | 230 | 190 | 164 |
| 8SDS 65/14A 8SM | 75 | 100 | | 411 | 377 | 370 | 364 | 358 | 350 | 331 | 303 | 266 | 219 | 188 |
| 8SDS 65/16A 8SM | 92 | 125 | | 470 | 432 | 424 | 417 | 410 | 401 | 379 | 348 | 306 | 252 | 216 |
| 8SDS 65/17A 8SM | 92 | 125 | | 498 | 458 | 449 | 442 | 434 | 425 | 401 | 368 | 323 | 265 | 227 |

**P2:** Rated motor power output.
**H:** Total head in m

# SDS

calpeda®

## Coverage chart n ≈ 2900 rpm

| Model | P2 | | Q = Flow | | | | | | | | | | | |
|---|---|---|---|---|---|---|---|---|---|---|---|---|---|---|
| | | | m³/h | 0 | 54 | 60 | 65 | 70 | 75 | 80 | 90 | 100 | 110 | 120 | 132 |
| | | | l/min | | 900 | 1000 | 1080 | 1170 | 1250 | 1330 | 1500 | 1670 | 1830 | 2000 | 2200 |
| | kW | HP | H (m) = Total head | | | | | | | | | | | | |
| 8SDS 95/1C 6SM | 7.5 | 10 | | 27,4 | 25,1 | 24,7 | 24,3 | 23,9 | 23,4 | 22,9 | 21,6 | 20,1 | 18,3 | 16,2 | 13,3 |
| 8SDS 95/1A 6SM | 9,2 | 12,5 | | 30 | 27,1 | 26,8 | 26,6 | 26,4 | 26 | 25,7 | 24,7 | 23,4 | 21,7 | 19,6 | 16,6 |
| 8SDS 95/2F 6SM | 9,2 | 12,5 | | 38,2 | 34,9 | 33,8 | 32,7 | 31,5 | 30,2 | 28,7 | 25,3 | 21,3 | 16,6 | - | - |
| 8SDS 95/2DF 6SM | 11 | 15 | | 44,4 | 40,9 | 40,1 | 39,2 | 38,1 | 36,9 | 35,5 | 32,3 | 28,5 | 24 | - | - |
| 8SDS 95/2D 6SM | 13 | 17,5 | | 50,6 | 46,8 | 46,1 | 45,4 | 44,5 | 43,4 | 42,2 | 39,1 | 35,4 | 31 | 26,1 | 19,2 |
| 8SDS 95/2C 6SM | 15 | 20 | | 54,8 | 50,6 | 49,8 | 49 | 48,1 | 47,2 | 46,1 | 43,5 | 40,5 | 36,9 | 32,8 | 26,8 |
| 8SDS 95/2A 6SM | 18.5 | 25 | | 59,8 | 54,3 | 53,7 | 53,1 | 52,5 | 51,7 | 50,9 | 48,8 | 46,1 | 42,7 | 38,7 | 32,9 |
| 8SDS 95/3DJ 6SM | 18.5 | 25 | | 71,7 | 66,9 | 65,8 | 64,6 | 63,2 | 61,5 | 59,5 | 54,9 | 49,3 | 42,9 | 35,8 | 25,7 |
| 8SDS 95/3C 6SM | 22 | 30 | | 82 | 75,7 | 74,5 | 73,3 | 72,1 | 70,6 | 69 | 65,3 | 60,6 | 54,9 | 48,1 | 38,9 |
| 8SDS 95/3A 6SM | 26 | 35 | | 89,8 | 82,4 | 81,5 | 80,6 | 79,5 | 78,3 | 76,9 | 73,6 | 69,5 | 64,5 | 58,7 | 50,1 |
| 8SDS 95/4D 6SM | 26 | 35 | | 101 | 94,2 | 92,6 | 90,9 | 89 | 86,7 | 84,1 | 78 | 70,7 | 62,3 | 52,7 | 39,2 |
| 8SDS 95/4C 6SM | 30 | 40 | | 109 | 102 | 99,6 | 98 | 96,3 | 94,3 | 92,1 | 86,9 | 80,7 | 73,4 | 64,9 | 52,8 |
| 8SDS 95/4C 8SM | 30 | 40 | | 110 | 102 | 101 | 98,9 | 97,3 | 95,4 | 93,3 | 88,2 | 82 | 74,6 | 66 | 53,9 |
| 8SDS 95/4A 6SM | 37 | 50 | | 119 | 110 | 109 | 107 | 106 | 105 | 103 | 98 | 92,3 | 85,2 | 76,8 | 64,9 |
| 8SDS 95/4A 8SM | 37 | 50 | | 120 | 112 | 110 | 109 | 108 | 107 | 105 | 101 | 94,9 | 88,2 | 80,1 | 68,6 |
| 8SDS 95/5KC 6SM | 37 | 50 | | 134 | 125 | 123 | 121 | 118 | 116 | 113 | 106 | 97,7 | 88 | 76,7 | 60,4 |
| 8SDS 95/5KC 8SM | 37 | 50 | | 135 | 127 | 125 | 123 | 121 | 119 | 116 | 109 | 101 | 91,2 | 80,2 | 63,9 |
| 8SDS 95/5A 6SM | 45 | 60 | | 149 | 137 | 136 | 134 | 132 | 130 | 128 | 122 | 115 | 106 | 95,2 | 80,7 |
| 8SDS 95/5A 8SM | 45 | 60 | | 150 | 139 | 137 | 136 | 135 | 133 | 131 | 126 | 119 | 111 | 101 | 85,6 |
| 8SDS 95/6QC 6SM | 45 | 60 | | 161 | 150 | 148 | 146 | 143 | 140 | 136 | 127 | 117 | 106 | 92 | 72,6 |
| 8SDS 95/6QC 8SM | 45 | 60 | | 163 | 151 | 149 | 147 | 145 | 142 | 139 | 132 | 122 | 111 | 96,7 | 77,4 |
| 8SDS 95/7ZC 8SM | 51 | 70 | | 186 | 174 | 172 | 169 | 166 | 163 | 159 | 149 | 138 | 124 | 109 | 84,9 |
| 8SDS 95/7Z 8SM | 59 | 80 | | 203 | 188 | 186 | 184 | 182 | 179 | 176 | 168 | 158 | 146 | 131 | 111 |
| 8SDS 95/8Z 8SM | 66 | 90 | | 233 | 215 | 212 | 210 | 207 | 204 | 201 | 192 | 181 | 167 | 150 | 126 |
| 8SDS 95/10XC 8SM | 75 | 100 | | 273 | 254 | 250 | 246 | 242 | 237 | 232 | 219 | 204 | 185 | 163 | 131 |
| 8SDS 95/10A 8SM | 92 | 125 | | 300 | 277 | 274 | 271 | 268 | 265 | 260 | 250 | 237 | 220 | 199 | 170 |
| 8SDS 95/12C 8SM | 92 | 125 | | 329 | 308 | 304 | 300 | 295 | 289 | 282 | 266 | 247 | 225 | 200 | 165 |

| Model | P2 | | Q = Flow | | | | | | | | | | | |
|---|---|---|---|---|---|---|---|---|---|---|---|---|---|---|
| | | | m³/h | 0 | 72 | 80 | 90 | 100 | 120 | 130 | 140 | 150 | 160 | 168 |
| | | | l/min | | 1200 | 1330 | 1500 | 1670 | 2000 | 2170 | 2330 | 2500 | 2670 | 2800 |
| | kW | HP | H (m) = Total head | | | | | | | | | | | |
| 8SDS 135/1F 6SM | 5.5 | 7.5 | | 20,4 | 17,1 | 16,6 | 15,8 | 14,9 | 12,6 | 11,4 | 10,1 | 8,8 | 7,3 | 6 |
| 8SDS 135/1D 6SM | 7.5 | 10 | | 24,5 | 21,2 | 20,8 | 20,1 | 19,3 | 17,4 | 16,3 | 15,2 | 14 | 12,7 | 11,6 |
| 8SDS 135/1B 6SM | 9,2 | 12,5 | | 27,2 | 23,9 | 23,4 | 22,8 | 22,1 | 20,2 | 19 | 17,8 | 16,5 | 15,1 | 14,1 |
| 8SDS 135/2G 6SM | 9,2 | 12,5 | | 36,9 | 30,1 | 29 | 27,3 | 25,4 | 20,7 | 18,1 | 15,3 | 12,5 | 9,6 | 7,3 |
| 8SDS 135/2F 6SM | 11 | 15 | | 40,8 | 34,3 | 33,2 | 31,7 | 29,8 | 25,5 | 23,2 | 20,7 | 18 | 14,9 | 11,9 |
| 8SDS 135/2E 6SM | 13 | 17,5 | | 44,9 | 38,3 | 37,3 | 35,9 | 34,3 | 30,3 | 28 | 25,5 | 22,9 | 20,2 | 18 |
| 8SDS 135/2D 6SM | 15 | 20 | | 48,9 | 42 | 41,1 | 39,7 | 38,2 | 34,4 | 32,3 | 29,9 | 27,4 | 24,9 | 22,7 |
| 8SDS 135/2B 6SM | 18.5 | 25 | | 54,1 | 47,2 | 46,4 | 45,1 | 43,5 | 39,7 | 37,4 | 34,9 | 32,3 | 29,7 | 27,5 |
| 8SDS 135/3E 6SM | 18.5 | 25 | | 66,9 | 56,9 | 55,5 | 53,5 | 51,1 | 45,1 | 41,6 | 37,7 | 33,7 | 29,5 | 26,3 |
| 8SDS 135/3D 6SM | 22 | 30 | | 73 | 62,5 | 61 | 59,1 | 56,8 | 51,5 | 48,3 | 44,7 | 40,9 | 36,8 | 33,4 |
| 8SDS 135/3B 6SM | 26 | 35 | | 81,2 | 70,5 | 69,1 | 67,2 | 65 | 59,5 | 56,2 | 52,5 | 48,5 | 44,4 | 41,1 |
| 8SDS 135/4D 6SM | 30 | 40 | | 97,4 | 83,4 | 81,5 | 78,8 | 75,9 | 68,7 | 64,4 | 59,7 | 54,6 | 49,1 | 44,6 |
| 8SDS 135/4D 8SM | 30 | 40 | | 97,9 | 84,6 | 82,7 | 80 | 76,9 | 69,6 | 65,3 | 60,8 | 55,9 | 50,5 | 45,8 |
| 8SDS 135/4C 6SM | 37 | 50 | | 105 | 91,4 | 89,5 | 86,8 | 83,8 | 76,4 | 72,2 | 67,6 | 62,7 | 57,3 | 52,3 |
| 8SDS 135/4C 8SM | 37 | 50 | | 106 | 93,1 | 91,4 | 88,8 | 85,7 | 78,3 | 74,1 | 69,6 | 64,8 | 59,5 | 54,6 |
| 8SDS 135/5D 6SM | 37 | 50 | | 121 | 105 | 102 | 98,5 | 94,7 | 85,3 | 79,8 | 73,8 | 67,4 | 60,6 | 55 |
| 8SDS 135/5D 8SM | 37 | 50 | | 123 | 106 | 104 | 101 | 96,3 | 87,4 | 82,3 | 76,6 | 70,5 | 63,8 | 57,9 |
| 8SDS 135/5B 6SM | 45 | 60 | | 135 | 117 | 115 | 111 | 108 | 97,8 | 92,3 | 86,1 | 79,5 | 72,5 | 66,8 |
| 8SDS 135/5B 8SM | 45 | 60 | | 136 | 120 | 117 | 114 | 111 | 102 | 95,9 | 89,4 | 82,4 | 75,4 | 70,1 |
| 8SDS 135/6C 8SM | 51 | 70 | | 159 | 139 | 137 | 133 | 129 | 117 | 111 | 104 | 96,4 | 88,3 | 81 |
| 8SDS 135/7C 8SM | 59 | 80 | | 186 | 163 | 160 | 155 | 150 | 137 | 129 | 122 | 114 | 104 | 95,2 |
| 8SDS 135/7A 8SM | 66 | 90 | | 197 | 173 | 170 | 166 | 161 | 148 | 140 | 132 | 122 | 112 | 104 |
| 8SDS 135/8C 8SM | 66 | 90 | | 212 | 186 | 183 | 178 | 172 | 157 | 148 | 138 | 128 | 117 | 107 |
| 8SDS 135/8A 8SM | 75 | 100 | | 224 | 198 | 194 | 189 | 183 | 168 | 159 | 150 | 139 | 128 | 119 |
| 8SDS 135/9C 8SM | 75 | 100 | | 238 | 208 | 204 | 198 | 191 | 175 | 165 | 155 | 143 | 131 | 120 |
| 8SDS 135/10C 8SM | 92 | 125 | | 265 | 232 | 228 | 221 | 213 | 195 | 185 | 173 | 161 | 147 | 135 |
| 8SDS 135/11C 8SM | 92 | 125 | | 290 | 254 | 249 | 242 | 234 | 214 | 202 | 190 | 176 | 161 | 148 |

**P2:** Rated motor power output.
**H:** Total head in m

# SDS

calpeda®

## Coverage chart n ≈ 2900 rpm

| Model | P2 | | Q = Flow | | | | | | | | | | | | | | | |
|---|---|---|---|---|---|---|---|---|---|---|---|---|---|---|---|---|---|---|
| | | | m³/h | 0 | 18 | 20 | 21 | 22 | 23 | 24 | 26 | 28 | 30 | 32 | 34 | 36 | 38 | 40 |
| | | | l/min | | 300 | 333 | 350 | 367 | 383 | 400 | 433 | 467 | 500 | 533 | 567 | 600 | 633 | 667 |
| | kW | HP | H (m) = Total head | | | | | | | | | | | | | | | |
| 8SDR 35/11A 6SM | 22 | 30 | | 234 | 213 | 209 | 207 | 204 | 202 | 199 | 193 | 187 | 179 | 171 | 163 | 153 | 143 | 132 |
| 8SDR 35/13A 6SM | 26 | 35 | | 277 | 253 | 248 | 246 | 243 | 240 | 237 | 230 | 222 | 214 | 205 | 195 | 184 | 172 | 160 |
| 8SDR 35/15A 6SM | 30 | 40 | | 323 | 299 | 294 | 291 | 288 | 284 | 280 | 272 | 263 | 252 | 241 | 229 | 217 | 203 | 189 |
| 8SDR 35/15A 8SM | 30 | 40 | | 323 | 299 | 294 | 291 | 288 | 284 | 280 | 272 | 263 | 252 | 241 | 229 | 217 | 203 | 189 |
| 8SDR 35/17A 6SM | 37 | 50 | | 364 | 333 | 327 | 324 | 321 | 317 | 313 | 304 | 293 | 282 | 270 | 256 | 242 | 226 | 210 |
| 8SDR 35/17A 8SM | 37 | 50 | | 368 | 341 | 335 | 332 | 328 | 324 | 320 | 312 | 302 | 291 | 279 | 266 | 251 | 236 | 219 |
| 8SDR 35/19A 6SM | 37 | 50 | | 406 | 369 | 362 | 358 | 354 | 349 | 345 | 334 | 323 | 310 | 296 | 281 | 264 | 247 | 228 |
| 8SDR 35/19A 8SM | 37 | 50 | | 410 | 379 | 372 | 368 | 364 | 360 | 355 | 345 | 334 | 321 | 307 | 292 | 276 | 259 | 241 |
| 8SDR 35/23A 6SM | 45 | 60 | | 490 | 446 | 437 | 433 | 428 | 423 | 417 | 404 | 390 | 375 | 358 | 339 | 319 | 298 | 276 |
| 8SDR 35/23A 8SM | 45 | 60 | | 496 | 458 | 450 | 445 | 440 | 435 | 429 | 417 | 404 | 388 | 372 | 354 | 335 | 314 | 292 |
| 8SDR B35/27A 8SM | 51 | 70 | | 581 | 532 | 522 | 516 | 510 | 504 | 498 | 484 | 468 | 451 | 432 | 411 | 389 | 365 | 339 |
| 8SDR B35/31A 8SM | 59 | 80 | | 667 | 614 | 604 | 598 | 592 | 585 | 578 | 563 | 545 | 525 | 503 | 479 | 452 | 423 | 391 |
| 8SDR B35/35A 8SM | 66 | 90 | | 753 | 691 | 678 | 672 | 665 | 657 | 649 | 631 | 611 | 588 | 563 | 535 | 504 | 471 | 436 |

| Model | P2 | | Q = Flow | | | | | | | | | |
|---|---|---|---|---|---|---|---|---|---|---|---|---|
| | | | m³/h | 0 | 28,8 | 30 | 35 | 40 | 45 | 50 | 55 | 60 |
| | | | l/min | | 480 | 500 | 583 | 667 | 750 | 833 | 917 | 1000 |
| | kW | HP | H (m) = Total head | | | | | | | | | |
| 8SDR 40/6A 6SM | 22 | 30 | | 144 | 126 | 125 | 121 | 117 | 111 | 103 | 94,3 | 84,1 |
| 8SDR 40/7A 6SM | 26 | 35 | | 168 | 147 | 146 | 142 | 136 | 130 | 122 | 112 | 100 |
| 8SDR 40/8A 6SM | 26 | 35 | | 194 | 171 | 170 | 164 | 158 | 150 | 140 | 128 | 115 |
| 8SDR 40/9A 6SM | 30 | 40 | | 215 | 189 | 187 | 181 | 174 | 166 | 155 | 143 | 128 |
| 8SDR 40/9A 8SM | 30 | 40 | | 217 | 191 | 190 | 184 | 177 | 169 | 158 | 145 | 130 |
| 8SDR 40/11A 6SM | 37 | 50 | | 263 | 230 | 228 | 221 | 213 | 202 | 189 | 173 | 154 |
| 8SDR 40/11A 8SM | 37 | 50 | | 267 | 234 | 233 | 226 | 218 | 208 | 195 | 179 | 160 |
| 8SDR 40/13A 6SM | 45 | 60 | | 310 | 273 | 271 | 263 | 253 | 240 | 224 | 206 | 183 |
| 8SDR 40/13A 8SM | 45 | 60 | | 315 | 277 | 275 | 267 | 258 | 246 | 231 | 213 | 191 |
| 8SDR 40/15A 8SM | 51 | 70 | | 363 | 318 | 316 | 307 | 297 | 283 | 265 | 243 | 218 |
| 8SDR 40/17A 8SM | 59 | 80 | | 409 | 358 | 356 | 346 | 334 | 318 | 298 | 273 | 244 |
| 8SDR 40/19A 8SM | 66 | 90 | | 459 | 403 | 401 | 390 | 376 | 358 | 336 | 308 | 276 |
| 8SDR B40/21A 8SM | 75 | 100 | | 507 | 445 | 442 | 430 | 414 | 395 | 370 | 340 | 305 |
| 8SDR B40/23A 8SM | 75 | 100 | | 555 | 487 | 484 | 469 | 453 | 432 | 406 | 374 | 336 |
| 8SDR B40/25A 8SM | 92 | 125 | | 604 | 530 | 526 | 511 | 493 | 470 | 441 | 405 | 361 |
| 8SDR B40/28A 8SM | 92 | 125 | | 674 | 590 | 586 | 568 | 547 | 521 | 488 | 446 | 397 |
| 8SDR B40/30A 8SM | 110 | 150 | | 726 | 642 | 638 | 621 | 599 | 571 | 536 | 493 | 442 |

**P2:** Rated motor power output.
**H:** Total head in m

# SDS

calpeda®

## Coverage chart n ≈ 2900 rpm

| Model | P2 | | Q = Flow | | | | | | | | | | | | | | | | |
|---|---|---|---|---|---|---|---|---|---|---|---|---|---|---|---|---|---|---|---|
| | | | m³/h | 0 | 54 | 60 | 70 | 80 | 90 | 100 | 110 | 120 | 130 | 140 | 150 | 160 | 180 | 200 | 216 |
| | | | l/min | | 900 | 1000 | 1170 | 1330 | 1500 | 1670 | 1830 | 2000 | 2170 | 2330 | 2500 | 2670 | 3000 | 3330 | 3600 |
| | kW | HP | H (m) = Total head | | | | | | | | | | | | | | | | |
| 10SDS 50/1H 6SM | 9,2 | 12,5 | | 27,2 | 23,6 | 23,3 | 22,8 | 22,2 | 21,7 | 21,1 | 20,4 | 19,6 | 18,6 | 17,5 | 16,1 | 14,5 | 10,2 | - | - |
| 10SDS 50/1F 6SM | 11 | 15 | | 29,7 | - | - | - | - | 24,2 | 23,8 | 23,3 | 22,7 | 22 | 21,1 | 19,9 | 18,6 | 15,1 | 10,6 | 6,5 |
| 10SDS 50/1D 6SM | 13 | 17,5 | | 34,8 | - | - | - | - | 29,3 | 28,7 | 28 | 27,2 | 26,3 | 25,4 | 24,3 | 23,1 | 20,2 | 16,7 | 13,3 |
| 10SDS 50/1B 6SM | 15 | 20 | | 36,5 | - | - | - | - | 30,3 | 29,8 | 29,3 | 28,7 | 28 | 27,3 | 26,5 | 25,5 | 23,1 | 19,7 | 15,9 |
| 10SDS 50/2G 6SM | 18.5 | 25 | | 54,7 | - | - | - | - | 44,5 | 43,2 | 41,7 | 40 | 38,1 | 35,9 | 33,5 | 30,9 | 25 | 18,4 | 12,7 |
| 10SDS 50/2E 6SM | 22 | 30 | | 62,8 | - | - | - | - | 52 | 50,7 | 49,3 | 47,6 | 45,8 | 43,7 | 41,3 | 38,7 | 32,7 | 25,6 | 18,7 |
| 10SDS 50/2CD 6SM | 26 | 35 | | 67,9 | - | - | - | - | 57,5 | 56 | 54,2 | 52,2 | 50 | 47,6 | 45 | 42,2 | 36,2 | 30 | 24,8 |
| 10SDS 50/2B 6SM | 30 | 40 | | 69,9 | - | - | - | - | 62 | 60,8 | 59,5 | 57,9 | 56,1 | 54,1 | 51,8 | 49,3 | 43,6 | 36,9 | 31 |
| 10SDS 50/2B 8SM | 30 | 40 | | 73,3 | - | - | - | - | 63,6 | 62,4 | 61,1 | 59,6 | 57,9 | 56,1 | 54 | 51,7 | 46,2 | 39,3 | 32,4 |
| 10SDS 50/3D 6SM | 37 | 50 | | 98,5 | - | - | - | - | 83,3 | 81,3 | 79,1 | 76,6 | 73,9 | 70,8 | 67,4 | 63,7 | 55,3 | 45,8 | 37,4 |
| 10SDS 50/3D 8SM | 37 | 50 | | 101 | - | - | - | - | 85,7 | 83,9 | 81,8 | 79,5 | 76,8 | 73,9 | 70,5 | 66,7 | 57,7 | 46,7 | 36,5 |
| 10SDS 50/3B 6SM | 45 | 60 | | 108 | - | - | - | - | 92,6 | 90,8 | 88,8 | 86,6 | 84,2 | 81,4 | 78,3 | 74,8 | 66,4 | 55,7 | 45 |
| 10SDS 50/3B 8SM | 45 | 60 | | 110 | - | - | - | - | 95,3 | 93,4 | 91,4 | 89,2 | 86,6 | 83,8 | 80,7 | 77,1 | 68,8 | 58,5 | 48,2 |
| 10SDS 50/4CD 8SM | 51 | 70 | | 137 | - | - | - | - | 117 | 114 | 111 | 108 | 104 | 99,7 | 95,3 | 90,3 | 78,7 | 64,5 | 50,7 |
| 10SDS 50/4B 8SM | 59 | 80 | | 145 | - | - | - | - | 126 | 123 | 121 | 117 | 114 | 110 | 106 | 101 | 90,2 | 76,5 | 62,5 |
| 10SDS 50/5CD 8SM | 66 | 90 | | 171 | - | - | - | - | 146 | 142 | 139 | 135 | 130 | 125 | 120 | 114 | 98,7 | 80,9 | 63,5 |
| 10SDS 50/5B 8SM | 75 | 100 | | 183 | - | - | - | - | 159 | 156 | 153 | 149 | 145 | 140 | 135 | 129 | 115 | 97,8 | 80,6 |
| 10SDS 50/6C 8SM | 92 | 125 | | 213 | - | - | - | - | 183 | 180 | 176 | 171 | 166 | 160 | 154 | 147 | 131 | 110 | 89,1 |
| 10SDS 50/7CD 8SM | 92 | 125 | | 242 | - | - | - | - | 208 | 203 | 199 | 193 | 187 | 180 | 173 | 164 | 144 | 119 | 94,7 |
| 10SDS 50/8C 8SM | 110 | 150 | | 287 | - | - | - | - | 235 | 231 | 226 | 221 | 216 | 209 | 202 | 193 | 172 | 145 | 120 |
| 10SDS 50/8B 8SM | 132 | 180 | | 295 | - | - | - | - | 259 | 254 | 249 | 244 | 238 | 230 | 222 | 213 | 192 | 165 | 138 |
| 10SDS 50/9BC 8SM | 132 | 180 | | 315 | - | - | - | - | 283 | 279 | 274 | 267 | 259 | 250 | 240 | 228 | 202 | 172 | 146 |
| 10SDS 50/10B 8SM | 150 | 200 | | 356 | - | - | - | - | 322 | 317 | 311 | 303 | 294 | 283 | 271 | 258 | 229 | 196 | 168 |
| 10SDS 50/11B 8SM | 165 | 220 | | 391 | - | - | - | - | 354 | 348 | 342 | 333 | 323 | 312 | 299 | 284 | 253 | 218 | 187 |
| 10SDS 50/12JC 8SM | 185 | 250 | | 424 | - | - | - | - | 383 | 377 | 370 | 361 | 350 | 338 | 325 | 309 | 276 | 237 | 203 |
| 10SDS 50/12JC 12SM | 170 | 230 | | 425 | - | - | - | - | 385 | 378 | 371 | 362 | 351 | 339 | 325 | 310 | 275 | 235 | 201 |
| 10SDS 50/13B 12SM | 190 | 260 | | 463 | - | - | - | - | 421 | 414 | 406 | 396 | 385 | 371 | 356 | 339 | 300 | 258 | 221 |
| 10SDS 50/13B 8SM | 185 | 250 | | 463 | - | - | - | - | 417 | 410 | 402 | 393 | 383 | 370 | 356 | 341 | 304 | 260 | 221 |
| 10SDS 50/14B 12SM | 220 | 300 | | 498 | - | - | - | - | 453 | 446 | 438 | 428 | 416 | 402 | 386 | 369 | 329 | 282 | 239 |
| 10SDS 50/15B 12SM | 220 | 300 | | 533 | - | - | - | - | 482 | 474 | 465 | 455 | 443 | 429 | 412 | 394 | 350 | 299 | 254 |

| Model | P2 | | Q = Flow | | | | | | | | | | | | | | |
|---|---|---|---|---|---|---|---|---|---|---|---|---|---|---|---|---|---|
| | | | m³/h | 0 | 99 | 120 | 130 | 140 | 150 | 160 | 170 | 180 | 190 | 200 | 220 | 240 | 252 |
| | | | l/min | | 1650 | 2000 | 2170 | 2330 | 2500 | 2670 | 2830 | 3000 | 3170 | 3330 | 3670 | 4000 | 4200 |
| | kW | HP | H (m) = Total head | | | | | | | | | | | | | | |
| 10SDS 55/2B 6SM | 30 | 40 | | 64,2 | 54,8 | 52,6 | 51,4 | 49,9 | 48,2 | 46,4 | 44,3 | 42 | 39,6 | 37 | 31,6 | 25,9 | 22,2 |
| 10SDS 55/2B 8SM | 30 | 40 | | 64,9 | 55,6 | 53,7 | 52,6 | 51,2 | 49,6 | 47,9 | 45,9 | 43,7 | 41,5 | 39 | 33,9 | 28,4 | 24,7 |
| 10SDS 55/2A 6SM | 37 | 50 | | 68,7 | 58,9 | 56,1 | 54,6 | 53 | 51,3 | 49,5 | 47,6 | 45,5 | 43,4 | 41,2 | 36,3 | 30,9 | 27,3 |
| 10SDS 55/2A 8SM | 37 | 50 | | 70,9 | 61,3 | 58,9 | 57,6 | 56,1 | 54,5 | 52,7 | 50,8 | 48,6 | 46,2 | 43,7 | 38,1 | 32,1 | 28,5 |
| 10SDS 55/3K 6SM | 45 | 60 | | 98,7 | 83,2 | 79,6 | 77,6 | 75,5 | 73,2 | 70,7 | 67,9 | 64,9 | 61,7 | 58,3 | 50,7 | 42,2 | 36,5 |
| 10SDS 55/3K 8SM | 45 | 60 | | 99,9 | 85,7 | 82,5 | 80,6 | 78,5 | 76,1 | 73,5 | 70,5 | 67,2 | 63,7 | 59,9 | 51,8 | 43,1 | 37,6 |
| 10SDS 55/3C 6SM | 37 | 50 | | 88,9 | 74,5 | 70,5 | 68,4 | 66 | 63,6 | 60,9 | 58,1 | 55,1 | 51,9 | 48,6 | 41,5 | 33,7 | 28,6 |
| 10SDS 55/3C 8SM | 37 | 50 | | 91,6 | 78,5 | 75,5 | 73,6 | 71,4 | 68,9 | 66 | 62,8 | 59,3 | 55,5 | 51,6 | 43,2 | 34,5 | 29 |
| 10SDS 55/3A 8SM | 51 | 70 | | 106 | 92,4 | 88,7 | 86,6 | 84,4 | 82 | 79,3 | 76,3 | 73,1 | 69,6 | 65,8 | 57,5 | 48,3 | 42,6 |
| 10SDS 55/4S 8SM | 51 | 70 | | 125 | 107 | 103 | 101 | 97,3 | 93,8 | 90 | 85,7 | 81,1 | 76,1 | 70,9 | 59,9 | 48,2 | 40,7 |
| 10SDS 55/4K 8SM | 59 | 80 | | 134 | 115 | 110 | 107 | 104 | 101 | 96,8 | 92,7 | 88,3 | 83,5 | 78,3 | 67 | 54,5 | 46,4 |
| 10SDS 55/4A 8SM | 66 | 90 | | 141 | 125 | 120 | 118 | 115 | 111 | 108 | 104 | 98,6 | 93,7 | 88,5 | 77 | 64,4 | 56,4 |
| 10SDS 55/5A 8SM | 75 | 100 | | 176 | 149 | 143 | 139 | 136 | 132 | 127 | 122 | 117 | 112 | 106 | 92,2 | 77,9 | 68,5 |
| 10SDS 55/6A 8SM | 92 | 125 | | 213 | 184 | 177 | 173 | 169 | 164 | 159 | 153 | 147 | 140 | 132 | 116 | 97,4 | 86,1 |
| 10SDS 55/7A 8SM | 110 | 150 | | 242 | 211 | 201 | 196 | 191 | 185 | 179 | 172 | 165 | 157 | 149 | 132 | 113 | 101 |
| 10SDS 55/8A 8SM | 132 | 180 | | 279 | 246 | 237 | 232 | 226 | 220 | 213 | 205 | 197 | 188 | 178 | 157 | 135 | 120 |
| 10SDS 55/9K 8SM | 132 | 180 | | 309 | 269 | 260 | 254 | 248 | 241 | 233 | 224 | 215 | 205 | 194 | 171 | 147 | 132 |
| 10SDS 55/10A 8SM | 150 | 200 | | 349 | 304 | 294 | 288 | 281 | 274 | 265 | 256 | 246 | 235 | 223 | 198 | 170 | 151 |
| 10SDS 55/11A 8SM | 185 | 250 | | 385 | 338 | 325 | 318 | 310 | 301 | 292 | 281 | 270 | 258 | 245 | 217 | 186 | 166 |
| 10SDS 55/11A 12SM | 170 | 230 | | 385 | 341 | 328 | 322 | 314 | 305 | 295 | 284 | 272 | 259 | 246 | 217 | 186 | 166 |
| 10SDS 55/12A 12SM | 190 | 260 | | 420 | 371 | 357 | 350 | 341 | 331 | 321 | 309 | 296 | 283 | 268 | 237 | 203 | 181 |
| 10SDS 55/12A 8SM | 185 | 250 | | 420 | 369 | 354 | 345 | 336 | 326 | 315 | 304 | 292 | 279 | 265 | 236 | 202 | 180 |
| 10SDS 55/13A 12SM | 220 | 300 | | 454 | 401 | 385 | 377 | 368 | 358 | 347 | 335 | 322 | 308 | 293 | 260 | 222 | 195 |
| 10SDS 55/14A 12SM | 220 | 300 | | 489 | 430 | 413 | 403 | 392 | 381 | 369 | 356 | 342 | 327 | 311 | 277 | 238 | 209 |
| 10SDS 55/15A 12SM | 250 | 340 | | 524 | 460 | 443 | 434 | 424 | 412 | 399 | 385 | 370 | 354 | 336 | 296 | 251 | 220 |

**P2:** Rated motor power output.
**H:** Total head in m

# SDS

calpeda®

## Coverage chart n ≈ 2900 rpm

| Model | P2 | | Q = Flow | | | | | | | | | | | | | | | |
|---|---|---|---|---|---|---|---|---|---|---|---|---|---|---|---|---|---|---|
| | | | m³/h | 0 | 162 | 180 | 200 | 220 | 240 | 260 | 288 | 300 | 320 | 338 | 350 | 360 | 368 | 385 |
| | | | l/min | | 2700 | 3000 | 3330 | 3670 | 4000 | 4330 | 4800 | 5000 | 5330 | 5630 | 5830 | 6000 | 6130 | 6420 |
| | kW | HP | H (m) = Total head | | | | | | | | | | | | | | | |
| 10SDS 64/1H 6SM | 13 | 17,5 | | 26,3 | 16,6 | 16 | 15,3 | 14,5 | 13,6 | 12,3 | 9,8 | - | - | - | - | - | - | - |
| 10SDS 64/1G 6SM | 15 | 20 | | 28,7 | 19,8 | 19,1 | 18,3 | 17,5 | 16,3 | 14,8 | 12,1 | - | - | - | - | - | - | - |
| 10SDS 64/1EF 6SM | 18.5 | 25 | | 32,3 | 23,6 | 22,7 | 21,7 | 20,7 | 19,4 | 18 | 15,6 | 14,3 | - | - | - | - | - | - |
| 10SDS 64/1CD 6SM | 22 | 30 | | 37,4 | 28,6 | 27,8 | 27 | 26 | 24,9 | 23,5 | 21,1 | 19,9 | 17,6 | 15,4 | - | - | - | - |
| 10SDS 64/1BC 6SM | 26 | 35 | | 40,4 | 31,4 | 30,5 | 29,5 | 28,5 | 27,3 | 26 | 23,8 | 22,7 | 20,7 | 18,6 | 17,1 | 15,7 | - | - |
| 10SDS 64/1A 6SM | 30 | 40 | | 45,6 | 34,7 | 33,7 | 32,7 | 31,8 | 30,9 | 29,9 | 28,1 | 27,2 | 25,3 | 23,3 | 21,8 | 20,5 | 19,4 | - |
| 10SDS 64/1A 8SM | 30 | 40 | | 46,4 | 35,5 | 34,5 | 33,5 | 32,5 | 31,5 | 30,4 | 28,6 | 27,6 | 25,9 | 24 | 22,6 | 21,4 | 20,4 | - |
| 10SDS 64/2EF 6SM | 37 | 50 | | 65 | 49,9 | 48,1 | 46 | 43,8 | 41,3 | 38,6 | 33,9 | 31,6 | 27 | - | - | - | - | - |
| 10SDS 64/2EF 8SM | 37 | 50 | | 65 | 49,9 | 48,1 | 46 | 43,8 | 41,3 | 38,6 | 33,9 | 31,6 | 27 | - | - | - | - | - |
| 10SDS 64/2CD 6SM | 45 | 60 | | 64,2 | 57,8 | 56,4 | 54,6 | 52,5 | 50 | 47,1 | 42,4 | 40,1 | 35,8 | 31,5 | - | - | - | - |
| 10SDS 64/2CD 8SM | 45 | 60 | | 74,7 | 59 | 57,5 | 55,7 | 53,7 | 51,5 | 48,7 | 44 | 41,6 | 37,3 | 33 | - | - | - | - |
| 10SDS 64/2BC 8SM | 51 | 70 | | 80,4 | 64,5 | 62,9 | 61 | 58,9 | 56,4 | 53,6 | 49 | 46,8 | 42,8 | 38,8 | 35,8 | 33,1 | - | - |
| 10SDS 64/2A 8SM | 59 | 80 | | 90,3 | 71 | 69,2 | 67,3 | 65,3 | 63,3 | 61 | 56,9 | 54,8 | 50,8 | 46,6 | 43,5 | 40,9 | 38,8 | - |
| 10SDS 64/3D 8SM | 66 | 90 | | 106 | 87,1 | 84,7 | 81,6 | 78,1 | 74,1 | 69,6 | 62,1 | 58,6 | 52,1 | 45,7 | 41,2 | 37,2 | - | - |
| 10SDS 64/3C 8SM | 75 | 100 | | 114 | 95,5 | 93 | 89,9 | 86,3 | 82,2 | 77,7 | 70,4 | 66,9 | 60,7 | 54,4 | 49,8 | 45,6 | 42,1 | - |
| 10SDS 64/3A 8SM | 92 | 125 | | 136 | - | 111 | 108 | 104 | 99,9 | 95,8 | 89,4 | 86,3 | 80,7 | 74,9 | 70,7 | 66,9 | 63,8 | 56,4 |
| 10SDS 64/4B 8SM | 110 | 150 | | 147 | - | 135 | 131 | 126 | 120 | 114 | 104 | 99,1 | 91,3 | 83,5 | 77,6 | 72 | 67,1 | - |
| 10SDS 64/4A 8SM | 132 | 180 | | 182 | - | 148 | 144 | 139 | 134 | 129 | 120 | 116 | 108 | 101 | 94,7 | 89,9 | 85,8 | 76,4 |
| 10SDS 64/5BC 8SM | 132 | 180 | | 203 | 170 | 166 | 161 | 155 | 148 | 140 | 128 | 123 | 113 | 103 | 94,7 | 88,1 | 82,4 | - |
| 10SDS 64/5K 8SM | 150 | 200 | | 223 | - | 181 | 176 | 170 | 163 | 156 | 144 | 139 | 130 | 120 | 113 | 107 | 101 | 88 |

| Model | P2 | | Q = Flow | | | | | | | | | |
|---|---|---|---|---|---|---|---|---|---|---|---|---|
| | | | m³/h | 0 | 28,8 | 35 | 40 | 45 | 50 | 55 | 60 | 65 | 70 |
| | | | l/min | | 480 | 583 | 667 | 750 | 833 | 917 | 1000 | 1080 | 1170 |
| | kW | HP | H (m) = Total head | | | | | | | | | | |
| 10SDR 30/5A 8SM | 30 | 40 | | 190 | 175 | 170 | 165 | 158 | 151 | 143 | 133 | 122 | 110 |
| 10SDR 30/6A 8SM | 37 | 50 | | 229 | 211 | 205 | 199 | 192 | 183 | 173 | 162 | 149 | 134 |
| 10SDR 30/8M 8SM | 45 | 60 | | 286 | 265 | 255 | 246 | 236 | 224 | 211 | 196 | 178 | 157 |
| 10SDR 30/9K 8SM | 51 | 70 | | 330 | 304 | 293 | 283 | 272 | 259 | 244 | 226 | 206 | 184 |
| 10SDR 30/10A 8SM | 59 | 80 | | 378 | 347 | 336 | 326 | 313 | 299 | 282 | 263 | 242 | 217 |
| 10SDR 30/11A 8SM | 66 | 90 | | 421 | 389 | 378 | 367 | 353 | 338 | 319 | 299 | 275 | 248 |
| 10SDR 30/13M 8SM | 75 | 100 | | 476 | 436 | 424 | 410 | 394 | 374 | 352 | 326 | 299 | 267 |
| 10SDR 30/14A 8SM | 92 | 125 | | 534 | 491 | 481 | 469 | 453 | 432 | 407 | 378 | 348 | 314 |
| 10SDR 30/15A 8SM | 92 | 125 | | 572 | 527 | 512 | 497 | 478 | 456 | 431 | 402 | 370 | 333 |
| 10SDR B30/16A 8SM | 110 | 150 | | 611 | 561 | 548 | 533 | 513 | 489 | 462 | 431 | 397 | 359 |
| 10SDR B30/17A 8SM | 110 | 150 | | 648 | 593 | 578 | 563 | 543 | 518 | 488 | 454 | 416 | 374 |
| 10SDR B30/18A 8SM | 110 | 150 | | 684 | 626 | 610 | 592 | 570 | 544 | 514 | 481 | 443 | 399 |
| 10SDR B30/19A 8SM | 132 | 180 | | 741 | 673 | 657 | 642 | 622 | 597 | 567 | 532 | 491 | 446 |
| 10SDR B30/20A 8SM | 132 | 180 | | 779 | 707 | 691 | 674 | 653 | 627 | 595 | 558 | 515 | 467 |

**P2:** Rated motor power output.
**H:** Total head in m

# SDS

calpeda®

## Coverage chart n ≈ 2900 rpm

| Model | P2 | | Q = Flow | | | | | | | | |
|---|---|---|---|---|---|---|---|---|---|---|---|
| | | | m³/h | 0 | 62 | 70 | 75 | 80 | 85 | 90 | 95 |
| | | | l/min | | 1030 | 1170 | 1250 | 1330 | 1420 | 1500 | 1580 |
| | kW | HP | H (m) = Total head | | | | | | | | |
| 10SDR 35/5A 8SM | 37 | 50 | | 178 | 137 | 126 | 118 | 109 | 99,1 | 89,4 | 79,3 |
| 10SDR 35/6A 8SM | 37 | 50 | | 211 | 160 | 146 | 136 | 126 | 115 | 103 | 91 |
| 10SDR 35/7A 8SM | 45 | 60 | | 248 | 188 | 172 | 160 | 148 | 135 | 122 | 108 |
| 10SDR 35/8A 8SM | 51 | 70 | | 283 | 214 | 196 | 182 | 168 | 154 | 138 | 123 |
| 10SDR 35/9A 8SM | 59 | 80 | | 320 | 242 | 221 | 206 | 190 | 173 | 156 | 137 |
| 10SDR 35/10A 8SM | 66 | 90 | | 357 | 273 | 251 | 235 | 217 | 199 | 179 | 159 |
| 10SDR 35/11A 8SM | 75 | 100 | | 392 | 303 | 278 | 261 | 241 | 221 | 200 | 178 |
| 10SDR 35/12A 8SM | 92 | 125 | | 427 | 328 | 301 | 282 | 261 | 239 | 216 | 191 |
| 10SDR 35/13A 8SM | 92 | 125 | | 461 | 354 | 324 | 303 | 280 | 256 | 231 | 205 |
| 10SDR B35/14A 8SM | 92 | 125 | | 497 | 378 | 346 | 324 | 299 | 273 | 246 | 218 |
| 10SDR B35/15A 8SM | 110 | 150 | | 533 | 409 | 374 | 350 | 323 | 296 | 267 | 236 |
| 10SDR B35/16A 8SM | 110 | 150 | | 565 | 430 | 392 | 364 | 335 | 304 | 273 | 241 |
| 10SDR B35/17A 8SM | 110 | 150 | | 601 | 458 | 418 | 389 | 359 | 327 | 294 | 261 |
| 10SDR B35/18A 8SM | 132 | 180 | | 644 | 503 | 462 | 433 | 400 | 366 | 330 | 293 |
| 10SDR B35/19A 8SM | 132 | 180 | | 680 | 532 | 489 | 458 | 424 | 387 | 348 | 309 |
| 10SDR B35/20A 8SM | 132 | 180 | | 715 | 558 | 513 | 480 | 444 | 405 | 365 | 324 |
| 10SDR B35/21A 8SM | 150 | 200 | | 753 | 589 | 542 | 507 | 469 | 428 | 386 | 343 |

| Model | P2 | | Q = Flow | | | | | | | | | | | | |
|---|---|---|---|---|---|---|---|---|---|---|---|---|---|---|---|
| | | | m³/h | 0 | 62 | 70 | 75 | 80 | 85 | 90 | 95 | 100 | 110 | 120 | 132 |
| | | | l/min | | 1030 | 1170 | 1250 | 1330 | 1420 | 1500 | 1580 | 1670 | 1830 | 2000 | 2200 |
| | kW | HP | H (m) = Total head | | | | | | | | | | | | |
| 10SDR 40/4B 8SM | 30 | 40 | | 114 | 101 | 97,8 | 95,4 | 92,5 | 89,1 | 85,2 | 80,9 | 76,2 | 65,5 | 53,8 | 39,3 |
| 10SDR 40/4A 8SM | 37 | 50 | | 148 | 125 | 121 | 119 | 116 | 113 | 109 | 105 | 101 | 90,4 | 79 | 61,9 |
| 10SDR 40/5I 8SM | 45 | 60 | | 177 | 150 | 146 | 143 | 139 | 135 | 130 | 125 | 120 | 106 | 91,4 | 73,2 |
| 10SDR 40/6K 8SM | 51 | 70 | | 205 | 174 | 169 | 165 | 161 | 156 | 150 | 144 | 137 | 121 | 103 | 79,5 |
| 10SDR 40/7M 8SM | 59 | 80 | | 232 | 198 | 192 | 187 | 182 | 176 | 170 | 162 | 154 | 136 | 117 | 92,9 |
| 10SDR 40/8AB 8SM | 66 | 90 | | 262 | 225 | 218 | 213 | 207 | 200 | 193 | 184 | 175 | 154 | 131 | 101 |
| 10SDR 40/8A 8SM | 75 | 100 | | 296 | 251 | 244 | 239 | 233 | 227 | 219 | 211 | 202 | 181 | 156 | 123 |
| 10SDR 40/9A 8SM | 92 | 125 | | 334 | 283 | 274 | 268 | 261 | 253 | 245 | 236 | 226 | 204 | 178 | 141 |
| 10SDR 40/10A 8SM | 92 | 125 | | 370 | 312 | 302 | 296 | 288 | 280 | 270 | 260 | 249 | 224 | 195 | 153 |
| 10SDR 40/11A 8SM | 110 | 150 | | 407 | 345 | 334 | 326 | 318 | 308 | 298 | 287 | 275 | 249 | 218 | 172 |
| 10SDR 40/12A 8SM | 110 | 150 | | 443 | 377 | 364 | 355 | 345 | 334 | 322 | 310 | 297 | 268 | 235 | 184 |
| 10SDR B40/13A 8SM | 132 | 180 | | 485 | 420 | 408 | 399 | 389 | 378 | 365 | 351 | 335 | 301 | 264 | 220 |
| 10SDR B40/14A 8SM | 132 | 180 | | 522 | 451 | 438 | 428 | 418 | 405 | 391 | 376 | 359 | 323 | 283 | 235 |
| 10SDR B40/15A 8SM | 150 | 200 | | 563 | 474 | 460 | 450 | 439 | 426 | 413 | 398 | 382 | 346 | 306 | 251 |
| 10SDR B40/16A 8SM | 150 | 200 | | 600 | 504 | 489 | 478 | 466 | 453 | 438 | 422 | 405 | 367 | 324 | 266 |
| 10SDR B40/17A 8SM | 165 | 220 | | 638 | 537 | 521 | 510 | 497 | 483 | 468 | 451 | 433 | 392 | 346 | 284 |
| 10SDR B40/18A 8SM | 165 | 220 | | 675 | 567 | 550 | 538 | 524 | 509 | 493 | 475 | 456 | 413 | 364 | 299 |

**P2:** Rated motor power output.
**H:** Total head in m

# SDS

calpeda®

## Coverage chart n ≈ 2900 rpm

| Model | P2 | | Q = Flow | | | | | | | | | | | | | |
|---|---|---|---|---|---|---|---|---|---|---|---|---|---|---|---|---|
| | | | m³/h | 0 | 144 | 160 | 170 | 180 | 190 | 200 | 220 | 240 | 260 | 280 | 300 | 324 |
| | | | l/min | | 2400 | 2670 | 2830 | 3000 | 3170 | 3330 | 3670 | 4000 | 4330 | 4670 | 5000 | 5400 |
| | kW | HP | H (m) = Total head | | | | | | | | | | | | | |
| 12SDS 42/4A 12SM | 170 | 230 | | 304 | 246 | 239 | 235 | 230 | 226 | 221 | 211 | 199 | 187 | 172 | 156 | 135 |
| 12SDS 42/4A 8SM | 185 | 250 | | 291 | 243 | 237 | 233 | 229 | 224 | 219 | 207 | 194 | 180 | 165 | 150 | 132 |
| 12SDS 42/5MN 12SM | 190 | 260 | | 342 | 285 | 278 | 273 | 267 | 262 | 256 | 243 | 228 | 210 | 191 | 170 | 145 |
| 12SDS 42/5A 12SM | 220 | 300 | | 378 | 309 | 300 | 295 | 289 | 282 | 276 | 262 | 247 | 230 | 211 | 192 | 166 |
| 12SDS 42/6P 12SM | 250 | 340 | | 426 | 349 | 339 | 333 | 326 | 320 | 312 | 297 | 280 | 260 | 238 | 213 | 180 |
| 12SDS 42/6B 12SM | 250 | 340 | | 399 | 336 | 328 | 323 | 316 | 310 | 302 | 286 | 267 | 245 | 222 | 197 | 165 |
| 12SDS 42/6A 12SM | 250 | 340 | | 452 | 365 | 355 | 348 | 342 | 335 | 328 | 313 | 296 | 277 | 255 | 231 | 198 |
| 12SDS 42/7M 12SM | 300 | 400 | | 501 | 411 | 400 | 392 | 384 | 376 | 367 | 348 | 327 | 304 | 278 | 250 | 214 |
| 12SDS 42/7A 12SM | 300 | 400 | | 527 | 426 | 414 | 407 | 399 | 391 | 382 | 363 | 343 | 319 | 293 | 264 | 227 |
| 12SDS 42/8Q 12SM | 350 | 475 | | 559 | 461 | 450 | 442 | 434 | 425 | 415 | 394 | 370 | 342 | 310 | 276 | 235 |
| 12SDS 42/8A 12SM | 350 | 475 | | 604 | 490 | 477 | 468 | 460 | 450 | 441 | 420 | 397 | 371 | 342 | 310 | 268 |
| 12SDS 42/9M 12SM | 400 | 540 | | 650 | 530 | 517 | 508 | 498 | 488 | 478 | 454 | 428 | 397 | 362 | 324 | 276 |

| Model | P2 | | Q = Flow | | | | | | | | | | | |
|---|---|---|---|---|---|---|---|---|---|---|---|---|---|---|
| | | | m³/h | 0 | 108 | 120 | 130 | 140 | 150 | 160 | 180 | 200 | 220 | 240 |
| | | | l/min | | 1800 | 2000 | 2170 | 2330 | 2500 | 2670 | 3000 | 3330 | 3670 | 4000 |
| | kW | HP | H (m) = Total head | | | | | | | | | | | |
| 12SDS 50/1D 6SM | 15 | 20 | | 36 | 29,7 | 28,8 | 27,9 | 27 | 25,9 | 24,6 | 21,9 | 18,6 | 15,1 | 11,2 |
| 12SDS 50/1B 6SM | 18.5 | 25 | | 41,5 | 33,9 | 33 | 32,2 | 31,4 | 30,4 | 29,3 | 26,7 | 23,7 | 20,1 | 16,1 |
| 12SDS 50/1A 6SM | 22 | 30 | | 43,8 | 37,6 | 36,9 | 36,2 | 35,4 | 34,5 | 33,5 | 31 | 28 | 24,6 | 20,4 |
| 12SDS 50/2EF 6SM | 26 | 35 | | 60 | 53,2 | 51,6 | 49,9 | 48 | 45,8 | 43,3 | 37,6 | 30,8 | 23,4 | 15,1 |
| 12SDS 50/2DE 6SM | 30 | 40 | | 68,9 | 58,5 | 57 | 55,5 | 53,7 | 51,6 | 49,1 | 43,4 | 36,8 | 29,6 | 21,7 |
| 12SDS 50/2DE 8SM | 30 | 40 | | 68,9 | 58,5 | 57 | 55,5 | 53,7 | 51,6 | 49,1 | 43,4 | 36,8 | 29,6 | 21,7 |
| 12SDS 50/2BC 6SM | 37 | 50 | | 80 | 66,9 | 65,1 | 63,4 | 61,5 | 59,5 | 57,2 | 52 | 45,9 | 39,1 | 31,7 |
| 12SDS 50/2BC 8SM | 37 | 50 | | 80 | 69,4 | 67,7 | 66,2 | 64,5 | 62,6 | 60,4 | 55,5 | 49,4 | 42,3 | 34,3 |
| 12SDS 50/2A 6SM | 45 | 60 | | 88,3 | 75,6 | 73,8 | 72,2 | 70,4 | 68,5 | 66,4 | 61,7 | 56 | 49,2 | 41,1 |
| 12SDS 50/2A 8SM | 45 | 60 | | 87 | 76,6 | 75,2 | 74 | 72,6 | 71 | 69,2 | 64,8 | 59,2 | 52 | 43,4 |
| 12SDS 50/3C 8SM | 51 | 70 | | 120 | 101 | 97,6 | 95,1 | 92,4 | 89,4 | 86,1 | 78,5 | 69,5 | 59 | 47 |
| 12SDS 50/3K 8SM | 59 | 80 | | 130 | 109 | 107 | 105 | 102 | 99,1 | 96,2 | 89,2 | 80,6 | 70,2 | 58,3 |
| 12SDS 50/3A 8SM | 66 | 90 | | 136 | 117 | 114 | 112 | 110 | 107 | 104 | 97,1 | 88,5 | 78,2 | 66,2 |
| 12SDS 50/4Z 8SM | 75 | 100 | | 166 | 140 | 137 | 134 | 130 | 127 | 122 | 112 | 99,9 | 86 | 69,9 |
| 12SDS 50/4A 8SM | 92 | 125 | | 183 | 156 | 153 | 150 | 147 | 144 | 140 | 130 | 118 | 104 | 88,5 |
| 12SDS 50/5BC 8SM | 92 | 125 | | 205 | 172 | 168 | 164 | 160 | 155 | 150 | 138 | 124 | 106 | 84 |
| 12SDS 50/5A 8SM | 110 | 150 | | 227 | 198 | 194 | 191 | 187 | 182 | 177 | 166 | 153 | 138 | 121 |
| 12SDS 50/6A 8SM | 132 | 180 | | 275 | 239 | 234 | 230 | 225 | 220 | 214 | 200 | 183 | 163 | 140 |
| 12SDS 50/7I 8SM | 150 | 200 | | 319 | 274 | 268 | 263 | 257 | 250 | 243 | 226 | 206 | 183 | 156 |
| 12SDS 50/8M 8SM | 165 | 220 | | 358 | 310 | 303 | 296 | 289 | 281 | 273 | 254 | 231 | 205 | 174 |
| 12SDS 50/8A 12SM | 170 | 230 | | 362 | 316 | 308 | 302 | 295 | 287 | 279 | 260 | 238 | 212 | 181 |
| 12SDS 50/8A 8SM | 185 | 250 | | 361 | 316 | 309 | 302 | 295 | 288 | 280 | 261 | 239 | 213 | 181 |
| 12SDS 50/9A 12SM | 190 | 260 | | 407 | 354 | 346 | 339 | 331 | 323 | 313 | 292 | 267 | 238 | 202 |
| 12SDS 50/10A 12SM | 220 | 300 | | 451 | 393 | 385 | 377 | 368 | 359 | 349 | 326 | 299 | 266 | 226 |
| 12SDS 50/11A 12SM | 250 | 340 | | 496 | 433 | 424 | 415 | 405 | 395 | 384 | 358 | 328 | 292 | 247 |
| 12SDS 50/12A 12SM | 300 | 400 | | 543 | 472 | 461 | 452 | 441 | 430 | 417 | 390 | 358 | 319 | 271 |

**P2:** Rated motor power output.
**H:** Total head in m

# SDS

calpeda®

## Coverage chart n ≈ 2900 rpm

| Model | P2 | | Q = Flow | | | | | | | | | | | | |
|---|---|---|---|---|---|---|---|---|---|---|---|---|---|---|---|
| | | | m³/h | 0 | 119 | 130 | 140 | 150 | 162 | 180 | 200 | 220 | 240 | 260 | 288 |
| | | | l/min | | 1980 | 2170 | 2330 | 2500 | 2700 | 3000 | 3330 | 3670 | 4000 | 4330 | 4800 |
| | kW | HP | H (m) = Total head | | | | | | | | | | | | |
| 12SDS 55/1GH 6SM | 15 | 20 | | 29 | 24,5 | 24 | 23,6 | 23,1 | 22,5 | 21,4 | 20 | 18,4 | 16,5 | 14,5 | - |
| 12SDS 55/1EF 6SM | 18.5 | 25 | | 33,7 | 28,2 | 27,7 | 27,3 | 26,9 | 26,4 | 25,5 | 24,4 | 22,9 | 21,1 | 19 | 15,7 |
| 12SDS 55/1D 6SM | 22 | 30 | | 37 | 31,6 | 31,2 | 30,8 | 30,4 | 29,9 | 29,1 | 27,9 | 26,6 | 24,9 | 23 | 20,1 |
| 12SDS 55/1B 6SM | 30 | 40 | | 42,7 | 36,8 | 36,3 | 35,9 | 35,5 | 35 | 34,1 | 33 | 31,6 | 30 | 28,2 | - |
| 12SDS 55/1B 8SM | 30 | 40 | | 43,1 | 37,3 | 36,8 | 36,4 | 36 | 35,5 | 34,6 | 33,5 | 32,1 | 30,5 | 28,7 | 25,8 |
| 12SDS 55/2GH 6SM | 30 | 40 | | 58,7 | 50,1 | 49,4 | 48,7 | 47,8 | 46,5 | 44,3 | 41,1 | 37,4 | 33,3 | 28,7 | - |
| 12SDS 55/2GH 8SM | 30 | 40 | | 58,7 | 50,1 | 49,4 | 48,7 | 47,8 | 46,5 | 44,3 | 41,1 | 37,4 | 33,3 | 28,7 | - |
| 12SDS 55/2EF 6SM | 37 | 50 | | 66,8 | 57,3 | 56,4 | 55,6 | 54,7 | 53,4 | 51,2 | 48,4 | 45 | 41,1 | 36,8 | - |
| 12SDS 55/2EF 8SM | 37 | 50 | | 67,4 | 58,6 | 57,9 | 57,2 | 56,4 | 55,3 | 53,4 | 50,7 | 47,5 | 43,5 | 39,1 | 32,4 |
| 12SDS 55/2D 6SM | 45 | 60 | | 74,2 | 65,8 | 64,9 | 64 | 63,1 | 61,9 | 59,8 | 57 | 53,9 | 50,2 | 46,1 | 39,4 |
| 12SDS 55/2D 8SM | 45 | 60 | | 74,9 | 65,6 | 65,1 | 64,5 | 63,9 | 63 | 61,3 | 58,8 | 55,7 | 52 | 47,8 | 41,4 |
| 12SDS 55/2B 8SM | 51 | 70 | | 87 | 75,5 | 74,4 | 73,4 | 72,4 | 71,1 | 68,9 | 66 | 62,8 | 59,1 | 54,9 | 48,3 |
| 12SDS 55/2A 8SM | 59 | 80 | | 89,1 | 79 | 77,9 | 76,9 | 75,9 | 74,6 | 72,4 | 69,6 | 66,4 | 62,6 | 58,2 | 51,3 |
| 12SDS 55/3DE 8SM | 59 | 80 | | 107 | 93,6 | 92,5 | 91,5 | 90,3 | 88,8 | 86 | 82,2 | 77,4 | 71,7 | 65,1 | 55 |
| 12SDS 55/3CJ 8SM | 66 | 90 | | 114 | 100 | 99 | 98,2 | 97,2 | 95,8 | 93,2 | 89,5 | 84,8 | 79,3 | 73,1 | 63,4 |
| 12SDS 55/3A 8SM | 92 | 125 | | 136 | 122 | 120 | 119 | 117 | 115 | 112 | 108 | 104 | 97,7 | 91,4 | 81 |
| 12SDS 55/4JF 8SM | 75 | 100 | | 136 | 120 | 118 | 117 | 115 | 113 | 109 | 103 | 95,9 | 87,8 | 78,6 | 65,1 |
| 12SDS 55/4D 8SM | 92 | 125 | | 150 | 135 | 133 | 131 | 129 | 127 | 123 | 118 | 112 | 105 | 96,3 | 81,9 |
| 12SDS 55/4B 8SM | 110 | 150 | | 170 | 149 | 148 | 146 | 145 | 143 | 140 | 136 | 131 | 124 | 117 | 103 |
| 12SDS 55/5T 8SM | 132 | 180 | | 208 | 185 | 183 | 181 | 179 | 177 | 173 | 167 | 161 | 153 | 143 | 128 |
| 12SDS 55/5D 8SM | 110 | 150 | | 186 | 163 | 161 | 159 | 157 | 155 | 151 | 145 | 138 | 129 | 119 | 104 |
| 12SDS 55/6BC 8SM | 150 | 200 | | 251 | 221 | 219 | 217 | 215 | 212 | 207 | 199 | 190 | 180 | 167 | 147 |
| 12SDS 55/6A 8SM | 165 | 220 | | 279 | 240 | 237 | 234 | 231 | 227 | 220 | 213 | 204 | 193 | 180 | 158 |
| 12SDS 55/7K 12SM | 190 | 260 | | 314 | 279 | 276 | 273 | 270 | 266 | 259 | 249 | 238 | 225 | 210 | 185 |
| 12SDS 55/8A 12SM | 220 | 300 | | 371 | 323 | 318 | 314 | 310 | 304 | 296 | 285 | 272 | 257 | 240 | 213 |
| 12SDS 55/9Q 12SM | 250 | 340 | | 401 | 352 | 347 | 342 | 338 | 332 | 322 | 309 | 295 | 279 | 261 | 231 |
| 12SDS 55/9B 12SM | 250 | 340 | | 364 | 342 | 339 | 335 | 331 | 326 | 317 | 306 | 293 | 277 | 260 | 231 |
| 12SDS 55/10A 12SM | 300 | 400 | | 466 | 403 | 397 | 392 | 387 | 380 | 370 | 356 | 341 | 323 | 301 | 266 |

| Model | P2 | | Q = Flow | | | | | | | | | | | | | |
|---|---|---|---|---|---|---|---|---|---|---|---|---|---|---|---|---|
| | | | m³/h | 0 | 180 | 220 | 240 | 260 | 280 | 300 | 320 | 340 | 360 | 385 | 400 | 432 |
| | | | l/min | | 3000 | 3670 | 4000 | 4330 | 4670 | 5000 | 5330 | 5670 | 6000 | 6420 | 6670 | 7200 |
| | kW | HP | H (m) = Total head | | | | | | | | | | | | | |
| 12SDS 58/1AB 6SM | 37 | 50 | | 45,7 | 35,5 | 34,2 | 33,5 | 32,7 | 31,7 | 30,4 | 28,9 | 27,1 | 24,9 | 22 | - | - |
| 12SDS 58/1AB 8SM | 37 | 50 | | 45,7 | 35,5 | 34,2 | 33,5 | 32,7 | 31,7 | 30,4 | 28,9 | 27,1 | 24,9 | 22 | - | - |
| 12SDS 58/2BC 8SM | 59 | 80 | | 81,4 | 64,9 | 61,6 | 59,8 | 57,8 | 55,5 | 52,7 | 49,5 | 45,8 | 41,7 | 36 | - | - |
| 12SDS 58/2AJ 8SM | 66 | 90 | | 85,9 | 70,1 | 67 | 65,3 | 63,5 | 61,3 | 58,7 | 55,7 | 52,1 | 48,1 | 42,8 | - | - |
| 12SDS 58/2A 8SM | 75 | 100 | | 91,7 | 76,3 | 73,2 | 71,6 | 69,7 | 67,6 | 65,3 | 62,5 | 59,3 | 55,8 | 50,7 | 47,3 | 39,6 |
| 12SDS 58/3W 8SM | 92 | 125 | | 124 | 103 | 97 | 94,3 | 91,5 | 88,3 | 84,7 | 80,4 | 75,2 | 69,2 | 60,2 | - | - |
| 12SDS 58/3A 8SM | 110 | 150 | | 137 | 114 | 109 | 106 | 102 | 98,4 | 94,4 | 90,2 | 85,6 | 80,7 | 74,1 | 69,8 | 59,8 |
| 12SDS 58/4M 8SM | 132 | 180 | | 174 | 145 | 139 | 135 | 131 | 127 | 122 | 116 | 110 | 102 | 91,1 | 84,3 | 69 |
| 12SDS 58/4A 8SM | 150 | 200 | | 183 | 158 | 153 | 150 | 146 | 142 | 137 | 131 | 124 | 117 | 107 | 99,6 | 84,4 |
| 12SDS 58/5M 12SM | 170 | 230 | | 220 | 187 | 179 | 174 | 169 | 164 | 158 | 151 | 143 | 134 | 121 | 113 | 95,1 |
| 12SDS 58/5M 8SM | 185 | 250 | | 219 | 183 | 174 | 169 | 163 | 157 | 151 | 144 | 136 | 128 | 117 | 109 | 92,1 |
| 12SDS 58/5I 8SM | 185 | 250 | | 227 | 191 | 182 | 178 | 172 | 167 | 160 | 153 | 145 | 137 | 125 | 117 | 99,8 |
| 12SDS 58/5A 12SM | 190 | 260 | | 230 | 199 | 192 | 188 | 184 | 178 | 172 | 165 | 157 | 148 | 135 | 127 | 107 |
| 12SDS 58/6Z 12SM | 190 | 260 | | 254 | 215 | 206 | 201 | 195 | 189 | 181 | 172 | 162 | 150 | 134 | 123 | 99,8 |
| 12SDS 58/7Z 12SM | 250 | 340 | | 298 | 255 | 244 | 238 | 231 | 223 | 214 | 203 | 192 | 179 | 160 | 148 | 119 |
| 12SDS 58/7X 12SM | 250 | 340 | | 305 | 261 | 250 | 243 | 235 | 226 | 216 | 205 | 193 | 180 | 161 | 150 | 121 |
| 12SDS 58/7A 12SM | 300 | 400 | | 321 | 276 | 266 | 260 | 253 | 245 | 237 | 228 | 217 | 205 | 187 | 176 | 148 |
| 12SDS 58/8AB 12SM | 300 | 400 | | 354 | 299 | 286 | 279 | 271 | 262 | 252 | 241 | 229 | 215 | 196 | 183 | 153 |

**P2:** Rated motor power output.
**H:** Total head in m

# SDS

calpeda®

## Coverage chart n ≈ 2900 rpm

| Model | P2 | | Q = Flow | | | | | | | | | | | | | | | | |
|---|---|---|---|---|---|---|---|---|---|---|---|---|---|---|---|---|---|---|---|
| | | | m³/h | 0 | 209 | 216 | 220 | 240 | 260 | 280 | 300 | 320 | 340 | 368 | 380 | 402 | 420 | 450 | 457 |
| | | | l/min | | 3480 | 3600 | 3670 | 4000 | 4330 | 4670 | 5000 | 5330 | 5670 | 6130 | 6330 | 6700 | 7000 | 7500 | 7620 |
| | kW | HP | H (m) = Total head | | | | | | | | | | | | | | | | |
| 14SDS 50/1E 8SM | 30 | 40 | | 44,7 | 32,3 | 31,8 | 31,6 | 30,2 | 28,8 | 27,3 | 25,6 | 23,9 | 22 | 19,4 | - | - | - | - | - |
| 14SDS 50/1D 8SM | 37 | 50 | | 51,4 | 38,1 | 37,6 | 37,4 | 36,1 | 34,8 | 33,3 | 31,7 | 29,9 | 28 | 25,2 | 23,9 | - | - | - | - |
| 14SDS 50/1C 8SM | 45 | 60 | | 58 | 43,7 | 43,3 | 43 | 41,7 | 40,4 | 39 | 37,5 | 35,8 | 33,9 | 30,9 | 29,6 | 27 | - | - | - |
| 14SDS 50/1B 8SM | 51 | 70 | | 63,4 | 48,4 | 47,9 | 47,7 | 46,4 | 45 | 43,6 | 42,1 | 40,4 | 38,5 | 35,7 | 34,4 | 31,9 | - | - | - |
| 14SDS 50/1A 8SM | 59 | 80 | | 68,6 | 52,9 | 52,5 | 52,2 | 50,9 | 49,5 | 48,1 | 46,5 | 44,9 | 43,1 | 40,4 | 39,2 | 36,8 | - | - | - |
| 14SDS 50/2E 8SM | 59 | 80 | | 89 | 63,4 | 62,5 | 62 | 59,5 | 56,9 | 54 | 50,9 | 47,5 | 43,8 | 38,3 | - | - | - | - | - |
| 14SDS 50/2D 8SM | 66 | 90 | | 102 | 74,9 | 74 | 73,5 | 71 | 68,3 | 65,5 | 62,3 | 58,8 | 54,9 | 49,1 | 46,5 | - | - | - | - |
| 14SDS 50/2CD 8SM | 75 | 100 | | 108 | 80,9 | 80,1 | 79,6 | 77 | 74,4 | 71,6 | 68,4 | 64,9 | 61,1 | 55,2 | 52,5 | - | - | - | - |
| 14SDS 50/2BC 8SM | 92 | 125 | | 122 | 93,2 | 92,3 | 91,8 | 89,2 | 86,5 | 83,8 | 80,8 | 77,5 | 73,8 | 68,1 | 65,5 | 60,4 | - | - | - |
| 14SDS 50/2AB 8SM | 110 | 150 | | 133 | 104 | 103 | 103 | 99,5 | 96,9 | 94,1 | 91,1 | 88 | 84,5 | 79,1 | 76,6 | 71,7 | 67,5 | 60,2 | - |
| 14SDS 50/3C 8SM | 132 | 180 | | 176 | 135 | 134 | 133 | 130 | 126 | 122 | 117 | 112 | 106 | 96,9 | 92,8 | 85,1 | - | - | - |
| 14SDS 50/3B 8SM | 150 | 200 | | 196 | 151 | 150 | 149 | 145 | 141 | 137 | 133 | 128 | 123 | 115 | 111 | 103 | - | - | - |
| 14SDS 50/3A 8SM | 185 | 250 | | 210 | 168 | 166 | 166 | 162 | 158 | 154 | 149 | 145 | 140 | 132 | 128 | 121 | 115 | 104 | - |
| 14SDS 50/3A 12SM | 170 | 230 | | 210 | 168 | 166 | 166 | 162 | 158 | 154 | 149 | 144 | 139 | 131 | 127 | 120 | 114 | 104 | - |
| 14SDS 50/4BC 8SM | 185 | 250 | | 248 | 192 | 190 | 189 | 184 | 179 | 173 | 167 | 161 | 154 | 143 | 138 | 128 | 119 | 104 | - |
| 14SDS 50/4BC 12SM | 190 | 260 | | 248 | 192 | 190 | 189 | 184 | 178 | 172 | 166 | 159 | 152 | 141 | 136 | 126 | 118 | 104 | - |
| 14SDS 50/4I 12SM | 220 | 300 | | 275 | 218 | 216 | 215 | 210 | 204 | 198 | 191 | 185 | 177 | 167 | 162 | 153 | 145 | 133 | - |
| 14SDS 50/5JC 12SM | 250 | 340 | | 317 | - | 244 | 243 | 236 | 230 | 223 | 215 | 207 | 199 | 185 | 178 | 166 | 155 | 136 | - |
| 14SDS 50/5I 12SM | 300 | 400 | | 345 | - | 270 | 268 | 262 | 255 | 248 | 240 | 232 | 224 | 211 | 205 | 193 | 183 | 165 | - |
| 14SDS 50/6W 12SM | 350 | 475 | | 399 | - | 313 | 312 | 304 | 296 | 287 | 278 | 268 | 257 | 241 | 233 | 218 | 206 | 184 | 179 |
| 14SDS 50/6I 12SM | 350 | 475 | | 414 | - | 326 | 325 | 317 | 309 | 301 | 292 | 282 | 272 | 256 | 249 | 235 | 223 | 201 | 196 |
| 14SDS 50/7Q 12SM | 400 | 540 | | 461 | - | 358 | 356 | 347 | 337 | 327 | 317 | 305 | 293 | 275 | 266 | 249 | 235 | 210 | - |

| Model | P2 | | Q = Flow | | | | | | | | | | | | | | | | | |
|---|---|---|---|---|---|---|---|---|---|---|---|---|---|---|---|---|---|---|---|---|
| | | | m³/h | 0 | 216 | 250 | 270 | 290 | 300 | 320 | 340 | 360 | 380 | 400 | 420 | 450 | 457 | 500 | 540 | 594 |
| | | | l/min | | 3600 | 4170 | 4500 | 4830 | 5000 | 5330 | 5670 | 6000 | 6330 | 6670 | 7000 | 7500 | 7620 | 8330 | 9000 | 9900 |
| | kW | HP | H (m) = Total head | | | | | | | | | | | | | | | | | |
| 14SDS 55/1FG 8SM | 37 | 50 | | 38,9 | - | - | 30,4 | 29,5 | 29 | 27,9 | 26,7 | 25,4 | 23,9 | 22,3 | 20,6 | 17,8 | - | - | - | - |
| 14SDS 55/1EF 8SM | 45 | 60 | | 43,9 | - | - | 35,3 | 34,5 | 34,1 | 33,2 | 32,1 | 30,9 | 29,6 | 28,1 | 26,5 | 23,9 | - | - | - | - |
| 14SDS 55/1DE 8SM | 51 | 70 | | 49 | - | - | 40,5 | 39,8 | 39,4 | 38,6 | 37,6 | 36,6 | 35,4 | 34 | 32,5 | 30 | - | - | - | - |
| 14SDS 55/1CJ 8SM | 59 | 80 | | 53,6 | - | - | 44,7 | 43,9 | 43,5 | 42,7 | 41,8 | 40,7 | 39,6 | 38,4 | 37 | 34,8 | 34,3 | - | - | - |
| 14SDS 55/1C 8SM | 66 | 90 | | 57,9 | - | - | 48,9 | 48,1 | 47,7 | 46,9 | 45,9 | 45 | 43,9 | 42,7 | 41,5 | 39,6 | 39,1 | 36 | 33,1 | - |
| 14SDS 55/1B 8SM | 75 | 100 | | 64,7 | - | - | 53,4 | 52,5 | 52,1 | 51,2 | 50,3 | 49,4 | 48,3 | 47,2 | 46 | 44 | 43,5 | 40,3 | 36,9 | - |
| 14SDS 55/1A 8SM | 92 | 125 | | 72,6 | - | - | 59,6 | 58,6 | 58,1 | 57,1 | 56 | 54,9 | 53,8 | 52,6 | 51,3 | 49,3 | 48,8 | 45,4 | 41,8 | 35,9 |
| 14SDS 55/2JF 8SM | 92 | 125 | | 91,9 | - | - | 76,7 | 75,2 | 74,4 | 72,6 | 70,5 | 68,1 | 65,5 | 62,5 | 59,2 | 53,9 | 52,6 | - | - | - |
| 14SDS 55/2JE 8SM | 110 | 150 | | 103 | - | - | 87,4 | 86,1 | 85,4 | 83,8 | 82 | 79,9 | 77,5 | 74,9 | 72 | 67 | 65,7 | 57,4 | - | - |
| 14SDS 55/2JC 8SM | 150 | 200 | | 133 | - | - | 113 | 111 | 110 | 109 | 107 | 105 | 103 | 101 | 97,5 | 93,3 | 92,2 | 85,1 | 77,6 | - |
| 14SDS 55/2C 8SM | 132 | 180 | | 119 | - | - | 104 | 102 | 102 | 99,9 | 98,4 | 96,7 | 94,7 | 92,4 | 89,8 | 85,3 | 84,2 | 76,4 | 68,5 | - |
| 14SDS 55/2AB 8SM | 185 | 250 | | 142 | - | - | 120 | 118 | 117 | 116 | 114 | 112 | 110 | 107 | 105 | 101 | 99,5 | 92,8 | 85,7 | 75,1 |
| 14SDS 55/2AB 12SM | 170 | 230 | | 142 | - | - | 121 | 119 | 118 | 116 | 114 | 112 | 110 | 108 | 105 | 101 | 99,7 | 92,8 | 85,6 | 75,2 |
| 14SDS 55/3D 8SM | 185 | 250 | | 161 | - | - | 138 | 137 | 136 | 133 | 131 | 128 | 125 | 121 | 118 | 111 | 109 | 97,1 | - | - |
| 14SDS 55/3D 12SM | 170 | 230 | | 161 | - | - | 139 | 137 | 136 | 134 | 132 | 129 | 125 | 121 | 117 | 109 | 107 | 95,9 | - | - |
| 14SDS 55/3JD 12SM | 190 | 260 | | 173 | - | - | 150 | 148 | 147 | 145 | 143 | 140 | 137 | 133 | 129 | 122 | 120 | 109 | 96,8 | - |
| 14SDS 55/3BC 12SM | 220 | 300 | | 197 | - | - | 164 | 162 | 160 | 158 | 155 | 152 | 149 | 145 | 142 | 135 | 134 | 123 | 111 | 93,4 |
| 14SDS 55/3B 12SM | 250 | 340 | | 206 | - | - | 175 | 172 | 171 | 169 | 166 | 163 | 160 | 156 | 152 | 146 | 144 | 133 | 122 | 106 |
| 14SDS 55/3A 12SM | 300 | 400 | | 220 | - | - | 184 | 181 | 180 | 177 | 174 | 172 | 168 | 165 | 161 | 155 | 154 | 144 | 133 | 117 |
| 14SDS E55/4BJ 12SM | 300 | 400 | | 248 | - | - | 213 | 210 | 209 | 206 | 203 | 199 | 195 | 190 | 185 | 177 | 175 | 160 | 145 | 121 |
| 14SDS E55/4I 12SM | 350 | 475 | | 288 | 249 | 244 | 241 | 238 | 236 | 233 | 229 | 226 | 221 | 217 | 212 | 203 | 201 | 188 | 174 | - |
| 14SDS E55/4B 12SM | 350 | 475 | | 275 | - | - | 233 | 229 | 228 | 224 | 220 | 216 | 212 | 207 | 202 | 194 | 192 | 179 | 165 | 143 |
| 14SDS E55/5C 12SM | 350 | 475 | | 298 | - | - | 259 | 256 | 254 | 251 | 247 | 242 | 237 | 232 | 226 | 215 | 213 | 195 | 176 | 146 |
| 14SDS E55/5BC 12SM | 400 | 540 | | 320 | - | - | 274 | 270 | 268 | 264 | 260 | 255 | 249 | 243 | 237 | 227 | 224 | 207 | 189 | 160 |

**P2:** Rated motor power output.
**H:** Total head in m

# SDS

calpeda®

## Coverage chart n ≈ 2900 rpm

| Model | P2 | | Q = Flow | | | | | | | | | | | | | |
|---|---|---|---|---|---|---|---|---|---|---|---|---|---|---|---|---|
| | | | m³/h | 0 | 432 | 450 | 500 | 550 | 600 | 650 | 676 | 720 | 738 | 760 | 810 | 840 |
| | | | l/min | | 7200 | 7500 | 8330 | 9170 | 10000 | 10800 | 11300 | 12000 | 12300 | 12700 | 13500 | 14000 |
| | kW | HP | H (m) = Total head | | | | | | | | | | | | | |
| 14SDS 64/1L 8SM | 51 | 70 | | 42,5 | 26,2 | 25,6 | 23,8 | 21,3 | 17,7 | - | - | - | - | - | - | - |
| 14SDS 64/1H 8SM | 59 | 80 | | 46,6 | 31,4 | 30,8 | 28,8 | 26,3 | 23 | - | - | - | - | - | - | - |
| 14SDS 64/1G 8SM | 66 | 90 | | 51,1 | - | - | - | 30,7 | 27,6 | 23,6 | 21,1 | - | - | - | - | - |
| 14SDS 64/1F 8SM | 75 | 100 | | 55,5 | - | - | - | 34,9 | 31,8 | 27,9 | 25,6 | 21,7 | - | - | - | - |
| 14SDS 64/1D 8SM | 92 | 125 | | 64,4 | - | - | - | 41,4 | 38,8 | 35,4 | 33,3 | 29,3 | 27,6 | 25,5 | - | - |
| 14SDS 64/1B 8SM | 110 | 150 | | 73,8 | - | - | - | 46,8 | 44,8 | 42,3 | 40,6 | 37,3 | 35,8 | 33,8 | 29 | - |
| 14SDS 64/1A 8SM | 132 | 180 | | 82,1 | - | - | - | 51,7 | 50,2 | 48,2 | 46,9 | 43,9 | 42,4 | 40,5 | 35,5 | 32,5 |
| 14SDS 64/2G 8SM | 132 | 180 | | 102 | - | - | - | 63 | 56,8 | 48,9 | 44,2 | 35,7 | - | - | - | - |
| 14SDS 64/2EF 8SM | 150 | 200 | | 115 | - | - | - | 73,6 | 67,8 | 60,6 | 56,4 | 48,6 | 45,4 | - | - | - |
| 14SDS 64/2DE 8SM | 185 | 250 | | 125 | - | - | - | 75,8 | 70,7 | 64,3 | 60,4 | 52,6 | 49,1 | 44,5 | - | - |
| 14SDS 64/2DE 12SM | 170 | 230 | | 124 | - | - | - | 81,7 | 76 | 69,1 | 65 | 57,4 | 54 | 49,9 | - | - |
| 14SDS 64/2C 12SM | 190 | 260 | | 138 | - | - | - | 91,3 | 85,8 | 79,3 | 75,4 | 68,2 | 65,1 | 61,2 | 52,6 | - |
| 14SDS 64/2A 12SM | 220 | 300 | | 159 | - | - | - | 103 | 97,4 | 91,3 | 87,7 | 81,2 | 78,3 | 74,6 | 66 | 60,9 |
| 14SDS 64/3JF 12SM | 250 | 340 | | 174 | - | - | - | 113 | 105 | 94,2 | 88,3 | 77,4 | 72,7 | 66,7 | - | - |
| 14SDS 64/3JD 12SM | 300 | 400 | | 201 | - | - | - | 134 | 125 | 114 | 108 | 95,8 | 90,8 | 84,4 | 69,5 | - |
| 14SDS 64/3B 12SM | 350 | 475 | | 222 | 163 | 161 | 154 | 147 | 139 | 129 | 124 | 113 | 109 | 103 | 87,7 | - |
| 14SDS 64/3A 12SM | 350 | 475 | | 238 | 175 | 173 | 165 | 157 | 149 | 139 | 134 | 124 | 119 | 113 | 99,4 | 91,2 |
| 14SDS 64/4CD 12SM | 400 | 540 | | 264 | - | - | - | 174 | 163 | 150 | 143 | 129 | 123 | 115 | - | - |

| Model | P2 | | Q = Flow | | | | | | | | | | | | | | |
|---|---|---|---|---|---|---|---|---|---|---|---|---|---|---|---|---|---|
| | | | m³/h | 0 | 478 | 500 | 521 | 550 | 600 | 650 | 676 | 720 | 738 | 760 | 810 | 840 | 900 |
| | | | l/min | | 7970 | 8330 | 8680 | 9170 | 10000 | 10800 | 11300 | 12000 | 12300 | 12700 | 13500 | 14000 | 15000 |
| | kW | HP | H (m) = Total head | | | | | | | | | | | | | | |
| 18SDS 64/1L 8SM | 51 | 70 | | 42 | 25,8 | 25,1 | 24,3 | 23,2 | 21 | 18 | 16 | - | - | - | - | - | - |
| 18SDS 64/1H 8SM | 59 | 80 | | 46 | 31,7 | 30,9 | 30 | 28,7 | 25,8 | 22,3 | 20,3 | 17 | - | - | - | - | - |
| 18SDS 64/1G 8SM | 66 | 90 | | 50,2 | - | - | 34,9 | 33,5 | 30,5 | 26,7 | 24,6 | 21,3 | - | - | - | - | - |
| 18SDS 64/1F 8SM | 75 | 100 | | 54 | - | - | 38,9 | 37,5 | 34,7 | 31,4 | 29,4 | 25,8 | 24,2 | - | - | - | - |
| 18SDS 64/1D 8SM | 92 | 125 | | 61,5 | - | - | 46,2 | 44,9 | 42,3 | 39,2 | 37,4 | 34 | 32,6 | 30,8 | 26,8 | - | - |
| 18SDS 64/1B 8SM | 110 | 150 | | 70,8 | - | - | 52,7 | 51,6 | 49,5 | 46,9 | 45,2 | 41,9 | 40,4 | 38,5 | 34,1 | - | - |
| 18SDS 64/1A 8SM | 132 | 180 | | 77,5 | - | - | 57,8 | 56,8 | 54,9 | 52,5 | 51 | 48,2 | 46,9 | 45,2 | 40,8 | 37,9 | 32 |
| 18SDS 64/2G 8SM | 132 | 180 | | 101 | - | - | 70,9 | 68,3 | 62,5 | 55,2 | 50,8 | 42,9 | - | - | - | - | - |
| 18SDS 64/2EF 8SM | 150 | 200 | | 112 | - | - | 83,1 | 80,4 | 74,6 | 67,7 | 63,6 | 56,3 | 53,2 | 49,4 | - | - | - |
| 18SDS 64/2DE 8SM | 185 | 250 | | 120 | - | - | 89,7 | 87 | 81,4 | 74,4 | 70,2 | 62,5 | 59,2 | 55,1 | 46,3 | - | - |
| 18SDS 64/2DE 12SM | 170 | 230 | | 120 | - | - | 91,6 | 89,3 | 84,3 | 77,7 | 73,6 | 65,8 | 62,3 | 58,1 | 49,1 | - | - |
| 18SDS 64/2C 12SM | 190 | 260 | | 133 | - | - | 101 | 98,1 | 93,3 | 87,3 | 83,7 | 76,8 | 73,8 | 70 | 61,2 | - | - |
| 18SDS 64/2A 12SM | 220 | 300 | | 154 | - | - | 114 | 112 | 107 | 101 | 97,6 | 91,5 | 88,7 | 85,2 | 76,4 | 70,6 | 58,2 |
| 18SDS 64/3JF 12SM | 250 | 340 | | 170 | - | - | 127 | 123 | 114 | 104 | 97,7 | 87,1 | 82,6 | 76,8 | 63,3 | 55 | 38 |
| 18SDS 64/3B 12SM | 350 | 475 | | 213 | - | - | 159 | 156 | 149 | 141 | 136 | 126 | 122 | 116 | 102 | 93,2 | 77,4 |
| 18SDS 64/3A 12SM | 350 | 475 | | 230 | - | - | 172 | 168 | 161 | 153 | 148 | 138 | 134 | 128 | 114 | 105 | 85,5 |
| 18SDS 64/4CD 12SM | 400 | 540 | | 255 | - | - | 194 | 188 | 177 | 164 | 157 | 144 | 138 | 131 | 115 | 105 | 84,8 |

**P2:** Rated motor power output.
**H:** Total head in m

# SDS

calpeda®

## Coverage chart n ≈ 2900 rpm

| Model | P2 | | Q = Flow | | | | | | | | | | | | | | | |
|---|---|---|---|---|---|---|---|---|---|---|---|---|---|---|---|---|---|---|
| | | | m³/h | 0 | 3,6 | 4 | 5 | 6 | 7 | 8 | 9 | 10 | 11 | 12 | 13 | 14 | 15 | 16,1 |
| | | | l/min | | 60 | 66.7 | 83.3 | 100 | 117 | 133 | 150 | 167 | 183 | 200 | 217 | 233 | 250 | 268 |
| | kW | HP | H (m) = Total head | | | | | | | | | | | | | | | |
| I-6SDR 30/9A 6SM | 4 | 5,5 | | 133 | 127 | 125 | 122 | 118 | 113 | 108 | 103 | 96,8 | 90,3 | 83,3 | 75,6 | 67,2 | 57,9 | 46,1 |
| I-6SDR 30/13A 6SM | 5.5 | 7.5 | | 190 | 181 | 179 | 173 | 167 | 159 | 152 | 144 | 136 | 127 | 117 | 107 | 94,9 | 81,6 | 64,2 |
| I-6SDR 30/18A 6SM | 7.5 | 10 | | 264 | 251 | 248 | 240 | 231 | 222 | 212 | 200 | 188 | 174 | 160 | 145 | 129 | 111 | 88,1 |
| I-6SDR 30/22A 6SM | 9,2 | 12,5 | | 322 | 307 | 303 | 294 | 283 | 271 | 258 | 244 | 229 | 213 | 196 | 178 | 159 | 137 | 109 |
| I-6SDR 30/26A 6SM | 11 | 15 | | 381 | 363 | 359 | 348 | 336 | 322 | 308 | 292 | 275 | 257 | 237 | 215 | 191 | 164 | 129 |
| I-6SDR 30/31A 6SM | 13 | 17,5 | | 453 | 429 | 424 | 411 | 396 | 381 | 364 | 345 | 324 | 302 | 278 | 252 | 224 | 193 | 153 |
| I-6SDR 30/36A 6SM | 15 | 20 | | 527 | 503 | 498 | 482 | 465 | 446 | 425 | 402 | 378 | 352 | 323 | 292 | 257 | 218 | 169 |
| I-6SDR 30/40A 6SM | 18.5 | 25 | | 584 | 555 | 549 | 532 | 513 | 493 | 470 | 445 | 419 | 391 | 361 | 328 | 292 | 251 | 198 |
| I-6SDR 30/45A 6SM | 18.5 | 25 | | 653 | 618 | 612 | 593 | 573 | 551 | 526 | 499 | 469 | 437 | 401 | 363 | 322 | 276 | 216 |
| I-6SDR 30/49A 6SM | 22 | 30 | | 715 | 678 | 670 | 650 | 628 | 603 | 576 | 547 | 514 | 479 | 441 | 400 | 355 | 305 | 240 |
| I-6SDR 30/53A 6SM | 22 | 30 | | 771 | 729 | 721 | 698 | 674 | 647 | 618 | 586 | 551 | 513 | 471 | 427 | 378 | 323 | 253 |
| I-6SDR 30/56A 6SM | 26 | 35 | | 820 | 779 | 771 | 747 | 722 | 694 | 663 | 630 | 593 | 554 | 511 | 463 | 411 | 351 | 276 |
| I-6SDR 30/60A 6SM | 26 | 35 | | 876 | 828 | 819 | 794 | 767 | 737 | 705 | 670 | 631 | 589 | 543 | 493 | 438 | 376 | 296 |

| Model | P2 | | Q = Flow | | | | | | | | | | | | | | | | |
|---|---|---|---|---|---|---|---|---|---|---|---|---|---|---|---|---|---|---|---|
| | | | m³/h | 0 | 7,2 | 8 | 9 | 10 | 11 | 12 | 13 | 14 | 15 | 16 | 17 | 18 | 19 | 20 | 21,6 |
| | | | l/min | | 120 | 133 | 150 | 167 | 183 | 200 | 217 | 233 | 250 | 267 | 283 | 300 | 317 | 333 | 360 |
| | kW | HP | H (m) = Total head | | | | | | | | | | | | | | | | |
| I-6SDR 37/7A 6SM | 4 | 5,5 | | 104 | 95,4 | 93,6 | 91,2 | 88,7 | 86 | 83,2 | 80,2 | 77,1 | 73,8 | 70,2 | 66,5 | 62,5 | 58,2 | 53,5 | 45,2 |
| I-6SDR 37/9A 6SM | 5.5 | 7.5 | | 134 | 123 | 121 | 118 | 115 | 112 | 108 | 104 | 101 | 96,1 | 91,7 | 86,9 | 81,8 | 76,1 | 69,9 | 58,5 |
| I-6SDR 37/11A 6SM | 7.5 | 10 | | 165 | 153 | 150 | 147 | 143 | 139 | 135 | 131 | 126 | 121 | 115 | 109 | 103 | 95,1 | 87,3 | 73,2 |
| I-6SDR 37/13A 6SM | 7.5 | 10 | | 194 | 178 | 174 | 170 | 165 | 160 | 154 | 148 | 143 | 136 | 130 | 123 | 116 | 108 | 98,7 | 83,3 |
| I-6SDR 37/16A 6SM | 9,2 | 12,5 | | 237 | 217 | 213 | 208 | 202 | 196 | 190 | 183 | 176 | 168 | 160 | 151 | 141 | 131 | 120 | 101 |
| I-6SDR 37/19A 6SM | 11 | 15 | | 282 | 259 | 255 | 248 | 241 | 234 | 227 | 218 | 210 | 201 | 191 | 181 | 170 | 158 | 145 | 121 |
| I-6SDR 37/22A 6SM | 13 | 17,5 | | 326 | 300 | 295 | 288 | 281 | 273 | 265 | 256 | 246 | 236 | 225 | 212 | 199 | 185 | 169 | 141 |
| I-6SDR 37/26A 6SM | 15 | 20 | | 386 | 354 | 348 | 339 | 329 | 319 | 308 | 298 | 286 | 274 | 261 | 247 | 232 | 216 | 198 | 166 |
| I-6SDR 37/29A 6SM | 18.5 | 25 | | 429 | 396 | 389 | 380 | 371 | 360 | 349 | 337 | 324 | 310 | 295 | 279 | 262 | 243 | 223 | 187 |
| I-6SDR 37/32A 6SM | 18.5 | 25 | | 472 | 434 | 426 | 415 | 403 | 391 | 378 | 365 | 351 | 336 | 320 | 303 | 284 | 263 | 241 | 200 |
| I-6SDR 37/35A 6SM | 22 | 30 | | 518 | 474 | 466 | 455 | 443 | 431 | 418 | 404 | 388 | 372 | 355 | 336 | 316 | 293 | 269 | 225 |
| I-6SDR 37/38A 6SM | 22 | 30 | | 561 | 513 | 503 | 491 | 478 | 464 | 450 | 435 | 419 | 401 | 383 | 362 | 339 | 314 | 286 | 237 |
| I-6SDR 37/41A 6SM | 26 | 35 | | 609 | 559 | 549 | 535 | 521 | 506 | 490 | 474 | 457 | 438 | 418 | 397 | 373 | 347 | 318 | 266 |
| I-6SDR 37/45A 6SM | 26 | 35 | | 666 | 611 | 600 | 584 | 568 | 550 | 532 | 512 | 492 | 470 | 448 | 424 | 399 | 371 | 342 | 287 |
| I-6SDR 37/48A 6SM | 30 | 40 | | 711 | 651 | 639 | 624 | 607 | 590 | 572 | 552 | 532 | 510 | 486 | 460 | 431 | 399 | 364 | 302 |
| I-6SDR 37/52A 6SM | 30 | 40 | | 766 | 698 | 686 | 669 | 652 | 633 | 614 | 593 | 570 | 546 | 520 | 492 | 461 | 428 | 392 | 327 |
| I-6SDR 37/56A 6SM | 37 | 50 | | 829 | 755 | 741 | 722 | 703 | 684 | 663 | 642 | 619 | 594 | 567 | 537 | 504 | 467 | 426 | 351 |
| I-6SDR 37/60A 6SM | 37 | 50 | | 884 | 806 | 791 | 772 | 753 | 732 | 710 | 686 | 661 | 633 | 603 | 570 | 533 | 493 | 450 | 372 |

| Model | P2 | | Q = Flow | | | | | | | | | | | | | | | |
|---|---|---|---|---|---|---|---|---|---|---|---|---|---|---|---|---|---|---|
| | | | m³/h | 0 | 10,8 | 12 | 13 | 14 | 16 | 18 | 20 | 22 | 24 | 26 | 28 | 30 | 32 | 34 |
| | | | l/min | | 180 | 200 | 217 | 233 | 267 | 300 | 333 | 367 | 400 | 433 | 467 | 500 | 533 | 567 |
| | kW | HP | H (m) = Total head | | | | | | | | | | | | | | | |
| I-6SDR 47/4I 6SM | 4 | 5,5 | | 58,4 | 55,3 | 54,9 | 54,6 | 54,2 | 53,3 | 52,1 | 50,6 | 48,8 | 46,6 | 44,1 | 41,2 | 38,1 | 34,8 | 31,2 |
| I-6SDR 47/5A 6SM | 5.5 | 7.5 | | 75,8 | 71,5 | 70,9 | 70,4 | 69,8 | 68,5 | 67 | 65,1 | 62,9 | 60,2 | 57,2 | 53,8 | 49,9 | 45,7 | 41,1 |
| I-6SDR 47/7A 6SM | 7.5 | 10 | | 107 | 101 | 101 | 99,6 | 98,8 | 97 | 94,8 | 92,2 | 88,9 | 85,2 | 80,8 | 75,8 | 70,3 | 64,3 | 57,7 |
| I-6SDR 47/9I 6SM | 9,2 | 12,5 | | 134 | 127 | 126 | 125 | 124 | 122 | 119 | 116 | 112 | 107 | 101 | 94,6 | 87,6 | 80,1 | 71,9 |
| I-6SDR 47/10A 6SM | 11 | 15 | | 152 | 145 | 144 | 143 | 142 | 139 | 136 | 131 | 127 | 121 | 115 | 108 | 99,6 | 91,2 | 82,3 |
| I-6SDR 47/12A 6SM | 13 | 17,5 | | 182 | 173 | 172 | 170 | 169 | 166 | 161 | 157 | 151 | 144 | 137 | 129 | 120 | 110 | 98,9 |
| I-6SDR 47/14A 6SM | 15 | 20 | | 212 | 200 | 198 | 197 | 195 | 191 | 186 | 181 | 174 | 167 | 158 | 148 | 137 | 126 | 113 |
| I-6SDR 47/17A 6SM | 18.5 | 25 | | 257 | 244 | 242 | 240 | 238 | 234 | 227 | 220 | 212 | 202 | 191 | 179 | 166 | 152 | 137 |
| I-6SDR 47/21A 6SM | 22 | 30 | | 317 | 299 | 297 | 295 | 292 | 286 | 278 | 268 | 258 | 245 | 232 | 217 | 201 | 185 | 167 |
| I-6SDR 47/25A 6SM | 26 | 35 | | 378 | 356 | 353 | 350 | 347 | 339 | 330 | 319 | 306 | 291 | 275 | 258 | 239 | 218 | 196 |
| I-6SDR 47/28A 6SM | 30 | 40 | | 422 | 398 | 395 | 392 | 388 | 381 | 372 | 361 | 348 | 333 | 315 | 295 | 273 | 249 | 223 |
| I-6SDR 47/31A 6SM | 37 | 50 | | 467 | - | - | 432 | 429 | 421 | 411 | 399 | 384 | 367 | 347 | 325 | 300 | 273 | 244 |
| I-6SDR 47/35A 6SM | 37 | 50 | | 526 | - | - | 491 | 487 | 478 | 467 | 452 | 434 | 412 | 387 | 360 | 330 | 299 | 266 |

**P2:** Rated motor power output.
**H:** Total head in m

# SDS

calpeda®

## Coverage chart n ≈ 2900 rpm

| Model | P2 | | Q = Flow | | | | | | | | | | | | | | | | | |
|---|---|---|---|---|---|---|---|---|---|---|---|---|---|---|---|---|---|---|---|---|
| | | | m³/h | 0 | 14,4 | 16 | 18 | 20 | 22 | 24 | 26 | 28 | 30 | 32 | 34 | 36 | 38 | 40 | 44 | 48 |
| | | | l/min | | 240 | 267 | 300 | 333 | 367 | 400 | 433 | 467 | 500 | 533 | 567 | 600 | 633 | 667 | 733 | 800 |
| | kW | HP | H (m) = Total head | | | | | | | | | | | | | | | | | |
| I-6SDS 50/3A 6SM | 4 | 5,5 | | 43,1 | 41,4 | 41 | 40,5 | 39,9 | 39,2 | 38,4 | 37,5 | 36,5 | 35,4 | 34,2 | 32,8 | 31,4 | 29,8 | 28,2 | 24,3 | 19,4 |
| I-6SDS 50/4A 6SM | 5.5 | 7.5 | | 57,2 | 54,5 | 54 | 53,3 | 52,6 | 51,8 | 50,8 | 49,7 | 48,5 | 47,2 | 45,7 | 44 | 42,1 | 40 | 37,8 | 32,6 | 26,6 |
| I-6SDS 50/6M 6SM | 7.5 | 10 | | 79,6 | 75 | 74,3 | 73,4 | 72,3 | 71,1 | 69,8 | 68,3 | 66,6 | 64,7 | 62,6 | 60,2 | 57,5 | 54,4 | 51,1 | 43,4 | 34,5 |
| I-6SDS 50/7I 6SM | 9,2 | 12,5 | | 94,6 | 89,8 | 89,2 | 88,3 | 87,3 | 86,2 | 85 | 83,5 | 81,8 | 79,8 | 77,5 | 74,8 | 71,6 | 68,1 | 64,1 | 54,8 | 44,3 |
| I-6SDS 50/8A 6SM | 11 | 15 | | 114 | 110 | 109 | 107 | 106 | 105 | 103 | 101 | 98 | 95,3 | 92,3 | 88,9 | 85,2 | 81 | 76,4 | 66 | 53,8 |
| I-6SDS 50/9A 6SM | 13 | 17,5 | | 129 | 123 | 122 | 120 | 119 | 117 | 115 | 113 | 111 | 108 | 104 | 101 | 96 | 91,3 | 86,2 | 74,5 | 60,8 |
| I-6SDS 50/11A 6SM | 15 | 20 | | 157 | 150 | 149 | 147 | 146 | 144 | 141 | 138 | 135 | 131 | 127 | 122 | 117 | 111 | 105 | 90,3 | 73,6 |
| I-6SDS 50/14A 6SM | 18.5 | 25 | | 199 | 188 | 186 | 184 | 182 | 179 | 176 | 172 | 168 | 163 | 157 | 151 | 144 | 137 | 129 | 111 | 89,6 |
| I-6SDS 50/16A 6SM | 22 | 30 | | 228 | 216 | 215 | 212 | 210 | 207 | 203 | 199 | 194 | 188 | 182 | 175 | 167 | 159 | 150 | 129 | 105 |
| I-6SDS 50/19A 6SM | 26 | 35 | | 271 | 258 | 256 | 253 | 250 | 246 | 242 | 237 | 231 | 225 | 218 | 209 | 200 | 191 | 180 | 154 | 125 |
| I-6SDS 50/22A 6SM | 30 | 40 | | 313 | 298 | 296 | 293 | 289 | 284 | 279 | 273 | 266 | 259 | 250 | 240 | 230 | 218 | 206 | 177 | 144 |
| I-6SDS 50/28A 6SM | 37 | 50 | | 397 | 376 | 373 | 369 | 363 | 358 | 351 | 343 | 335 | 325 | 314 | 302 | 288 | 273 | 257 | 220 | 177 |

| Model | P2 | | Q = Flow | | | | | | | | | | | | |
|---|---|---|---|---|---|---|---|---|---|---|---|---|---|---|---|
| | | | m³/h | 0 | 18 | 20 | 22 | 24 | 26 | 30 | 35 | 40 | 45 | 50 | 54 |
| | | | l/min | | 300 | 333 | 367 | 400 | 433 | 500 | 583 | 667 | 750 | 833 | 900 |
| | kW | HP | H (m) = Total head | | | | | | | | | | | | |
| I-6SDS 55/2I 6SM | 4 | 5,5 | | 31,8 | 30,2 | 29,9 | 29,7 | 29,4 | 29,2 | 28,5 | 27,3 | 25,8 | 23,8 | 21,4 | 19,2 |
| I-6SDS 55/3P 6SM | 5.5 | 7.5 | | 46,1 | 43,6 | 43,2 | 42,8 | 42,4 | 41,9 | 40,7 | 38,7 | 36,1 | 32,9 | 29,2 | 25,7 |
| I-6SDS 55/4P 6SM | 7.5 | 10 | | 62,7 | 59,3 | 58,8 | 58,3 | 57,7 | 57,1 | 55,5 | 52,9 | 49,7 | 45,6 | 40,6 | 36,1 |
| I-6SDS 55/5Q 6SM | 9,2 | 12,5 | | 77 | 72,6 | 72,1 | 71,5 | 70,8 | 70,1 | 68,3 | 65,1 | 60,9 | 55,7 | 49,4 | 43,7 |
| I-6SDS 55/6Z 6SM | 11 | 15 | | 92,5 | 87 | 86,4 | 85,7 | 84,9 | 84 | 81,8 | 78 | 73 | 66,6 | 59 | 52 |
| I-6SDS 55/7Z 6SM | 13 | 17,5 | | 109 | 103 | 102 | 101 | 99,6 | 98,4 | 95,6 | 91,2 | 85,7 | 78,7 | 70,1 | 62,1 |
| I-6SDS 55/8S 6SM | 15 | 20 | | 125 | 118 | 118 | 117 | 116 | 114 | 111 | 106 | 99 | 90,7 | 80,8 | 71,9 |
| I-6SDS 55/9A 6SM | 18.5 | 25 | | 147 | 140 | 139 | 138 | 136 | 135 | 132 | 126 | 120 | 111 | 99,7 | 89,8 |
| I-6SDS 55/11M 6SM | 22 | 30 | | 177 | 167 | 166 | 165 | 163 | 161 | 157 | 151 | 142 | 131 | 118 | 105 |
| I-6SDS 55/13M 6SM | 26 | 35 | | 210 | 198 | 196 | 195 | 193 | 191 | 186 | 178 | 168 | 156 | 140 | 126 |
| I-6SDS 55/15M 6SM | 30 | 40 | | 242 | 229 | 227 | 225 | 223 | 220 | 215 | 206 | 194 | 180 | 162 | 145 |
| I-6SDS 55/18A 6SM | 37 | 50 | | 294 | 277 | 275 | 273 | 271 | 268 | 262 | 251 | 237 | 219 | 198 | 177 |
| I-6SDS 55/21A 6SM | 45 | 60 | | 342 | 325 | 322 | 319 | 316 | 313 | 305 | 292 | 276 | 255 | 230 | 206 |

| Model | P2 | | Q = Flow | | | | | | | | | | | | |
|---|---|---|---|---|---|---|---|---|---|---|---|---|---|---|---|
| | | | m³/h | 0 | 28,8 | 30 | 35 | 40 | 45 | 50 | 55 | 60 | 65 | 70 | 75 | 81 |
| | | | l/min | | 480 | 500 | 583 | 667 | 750 | 833 | 917 | 1000 | 1080 | 1170 | 1250 | 1350 |
| | kW | HP | H (m) = Total head | | | | | | | | | | | | | |
| I-6SDS 64/2I 6SM | 4 | 5,5 | | 27,6 | 25 | 24,9 | 24,3 | 23,6 | 22,7 | 21,6 | 20,2 | 18,7 | 16,9 | 14,9 | 12,6 | 9,7 |
| I-6SDS 64/3K 6SM | 5.5 | 7.5 | | 40,1 | 36,1 | 35,9 | 35 | 33,9 | 32,6 | 30,9 | 28,9 | 26,5 | 23,8 | 20,8 | 17,4 | 13,1 |
| I-6SDS 64/4K 6SM | 7.5 | 10 | | 55,1 | 49,6 | 49,3 | 47,9 | 46,3 | 44,3 | 42,1 | 39,5 | 36,5 | 33,1 | 29,2 | 24,9 | 19,1 |
| I-6SDS 64/5M 6SM | 9,2 | 12,5 | | 67,5 | 61 | 60,6 | 59,1 | 57,2 | 54,8 | 51,9 | 48,3 | 44,1 | 39,4 | 34,2 | 28,6 | 21,9 |
| I-6SDS 64/6M 6SM | 11 | 15 | | 82,3 | 73,1 | 72,5 | 70 | 67,2 | 64,2 | 61 | 57,3 | 53,1 | 48,1 | 42,3 | 35,8 | 27,5 |
| I-6SDS 64/7MN 6SM | 13 | 17,5 | | 94,8 | 85,5 | 85 | 82,8 | 80,1 | 76,9 | 73 | 68,3 | 62,9 | 56,6 | 49,6 | 41,9 | 31,8 |
| I-6SDS 64/7A 6SM | 15 | 20 | | 103 | 94,1 | 93,5 | 90,8 | 87,8 | 84,4 | 80,6 | 76,2 | 71 | 64,8 | 57,6 | 49,7 | 39,9 |
| I-6SDS 64/9A 6SM | 18.5 | 25 | | 132 | 120 | 119 | 115 | 112 | 107 | 102 | 96,1 | 89,3 | 81,3 | 72,2 | 62,2 | 49,8 |
| I-6SDS 64/11K 6SM | 22 | 30 | | 157 | 143 | 142 | 138 | 133 | 127 | 121 | 114 | 106 | 95,8 | 85,3 | 73,5 | 57,8 |
| I-6SDS 64/13K 6SM | 26 | 35 | | 186 | 168 | 167 | 163 | 158 | 152 | 145 | 136 | 126 | 114 | 101 | 86,6 | 68,9 |
| I-6SDS 64/15K 6SM | 30 | 40 | | 215 | 193 | 192 | 187 | 181 | 175 | 167 | 157 | 145 | 132 | 116 | 99,1 | 78,4 |
| I-6SDS 64/18A 6SM | 37 | 50 | | 262 | 235 | 233 | 228 | 221 | 213 | 203 | 191 | 177 | 161 | 143 | 123 | 98,5 |
| I-6SDS 64/21A 6SM | 45 | 60 | | 307 | 276 | 274 | 266 | 257 | 247 | 236 | 223 | 208 | 190 | 168 | 145 | 115 |

**P2:** Rated motor power output.
**H:** Total head in m

# SDS

calpeda®

## Coverage chart n ≈ 2900 rpm

| Model | P2 | | Q = Flow | | | | | | | | | | | | | | | |
|---|---|---|---|---|---|---|---|---|---|---|---|---|---|---|---|---|---|---|
| | | | m³/h | 0 | 28,8 | 35 | 40 | 45 | 50 | 55 | 60 | 65 | 70 | 75 | 80 | 85 | 90 | 96 |
| | | | l/min | | 480 | 583 | 667 | 750 | 833 | 917 | 1000 | 1080 | 1170 | 1250 | 1330 | 1420 | 1500 | 1600 |
| | kW | HP | H (m) = Total head | | | | | | | | | | | | | | | |
| I-8SDS 65/1D 6SM | 4 | 5,5 | | 24,9 | 22,7 | 22,2 | 21,8 | 21,2 | 20,4 | 19,6 | 18,6 | 17,4 | 16,2 | 14,8 | 13,4 | 11,8 | 10,2 | 8 |
| I-8SDS 65/1A 6SM | 5.5 | 7.5 | | 29,4 | 26,8 | 26,3 | 25,9 | 25,3 | 24,7 | 24 | 23,2 | 22,2 | 21,1 | 19,9 | 18,5 | 17,1 | 15,5 | 13,3 |
| I-8SDS 65/2T 6SM | 7.5 | 10 | | 47,5 | 43,3 | 42,2 | 41,2 | 39,9 | 38,4 | 36,7 | 34,7 | 32,5 | 30 | 27,3 | 24,4 | 21,2 | 17,5 | 12,1 |
| I-8SDS 65/2C 6SM | 9,2 | 12,5 | | 54,3 | 49,5 | 48,5 | 47,6 | 46,4 | 45,1 | 43,5 | 41,7 | 39,5 | 37,1 | 34,5 | 31,6 | 28,5 | 25,1 | 20,6 |
| I-8SDS 65/2A 6SM | 11 | 15 | | 58,7 | 53,5 | 52,5 | 51,7 | 50,7 | 49,5 | 48,1 | 46,5 | 44,6 | 42,5 | 40 | 37,4 | 34,4 | 31,2 | 26,9 |
| I-8SDS 65/3E 6SM | 11 | 15 | | 67,7 | 62,5 | 61,1 | 59,7 | 57,9 | 55,7 | 53,1 | 50,1 | 46,6 | 42,7 | 38,4 | 33,8 | 28,7 | 23,2 | 15,9 |
| I-8SDS 65/3JD 6SM | 13 | 17,5 | | 78,6 | 71,9 | 70,2 | 68,7 | 67 | 65 | 62,6 | 59,9 | 56,7 | 53,1 | 49,1 | 44,6 | 39,6 | 34,1 | 26,8 |
| I-8SDS 65/3K 6SM | 15 | 20 | | 84,9 | 78,1 | 76,4 | 75 | 73,3 | 71,4 | 69,2 | 66,6 | 63,7 | 60,4 | 56,7 | 52,6 | 48,1 | 43,3 | 37,2 |
| I-8SDS 65/4JC 6SM | 18.5 | 25 | | 110 | 101 | 98,4 | 96,3 | 94,1 | 91,5 | 88,5 | 85 | 81 | 76,5 | 71,4 | 65,7 | 59,6 | 53 | 44,7 |
| I-8SDS 65/4A 6SM | 22 | 30 | | 117 | 108 | 105 | 103 | 101 | 98 | 95,2 | 91,9 | 88,2 | 83,9 | 78,9 | 73,4 | 67,2 | 60,4 | 51,8 |
| I-8SDS 65/5KC 6SM | 22 | 30 | | 132 | 122 | 120 | 118 | 115 | 111 | 107 | 103 | 96,5 | 90,4 | 83,5 | 76,1 | 67,9 | 58,8 | 46,2 |
| I-8SDS 65/5A 6SM | 26 | 35 | | 146 | 134 | 132 | 130 | 127 | 124 | 121 | 117 | 112 | 106 | 99,4 | 92,3 | 84,5 | 76,1 | 65,3 |
| I-8SDS 65/6U 6SM | 30 | 40 | | 170 | 156 | 152 | 149 | 146 | 143 | 139 | 134 | 128 | 122 | 114 | 105 | 94,5 | 83,7 | 70,2 |
| I-8SDS 65/6U 8SM | 30 | 40 | | 171 | 158 | 155 | 152 | 149 | 146 | 141 | 136 | 130 | 123 | 116 | 107 | 97,2 | 87,1 | 74 |
| I-8SDS 65/6C 6SM | 30 | 40 | | 162 | 149 | 146 | 144 | 141 | 137 | 133 | 128 | 121 | 114 | 106 | 96 | 86,1 | 75,4 | 61,7 |
| I-8SDS 65/6C 8SM | 30 | 40 | | 163 | 151 | 148 | 146 | 143 | 139 | 135 | 129 | 123 | 116 | 108 | 98,8 | 89,3 | 78,9 | 65,4 |
| I-8SDS 65/7A 6SM | 37 | 50 | | 204 | 187 | 183 | 180 | 176 | 172 | 167 | 161 | 154 | 147 | 138 | 128 | 118 | 106 | 90,2 |
| I-8SDS 65/7A 8SM | 37 | 50 | | 205 | 189 | 186 | 183 | 179 | 176 | 171 | 166 | 159 | 152 | 143 | 133 | 122 | 110 | 94 |
| I-8SDS 65/9T 6SM | 45 | 60 | | 250 | 230 | 225 | 220 | 215 | 210 | 203 | 195 | 186 | 176 | 164 | 151 | 136 | 118 | 93,3 |
| I-8SDS 65/9T 8SM | 45 | 60 | | 253 | 234 | 230 | 226 | 222 | 217 | 210 | 202 | 193 | 183 | 172 | 158 | 144 | 127 | 103 |
| I-8SDS 65/10Z 8SM | 51 | 70 | | 287 | 265 | 260 | 256 | 251 | 245 | 238 | 230 | 220 | 208 | 195 | 181 | 165 | 148 | 126 |
| I-8SDS 65/11A 8SM | 59 | 80 | | 324 | 298 | 293 | 289 | 283 | 277 | 270 | 262 | 252 | 240 | 227 | 211 | 194 | 175 | 150 |
| I-8SDS 65/12A 8SM | 66 | 90 | | 353 | 325 | 319 | 314 | 309 | 302 | 294 | 285 | 274 | 261 | 247 | 230 | 211 | 190 | 164 |
| I-8SDS 65/14A 8SM | 75 | 100 | | 411 | 377 | 370 | 364 | 358 | 350 | 341 | 331 | 318 | 303 | 286 | 266 | 244 | 219 | 188 |
| I-8SDS 65/16A 8SM | 92 | 125 | | 470 | 432 | 424 | 417 | 410 | 401 | 391 | 379 | 365 | 348 | 329 | 306 | 280 | 252 | 216 |
| I-8SDS 65/17A 8SM | 92 | 125 | | 498 | 458 | 449 | 442 | 434 | 425 | 414 | 401 | 386 | 368 | 347 | 323 | 295 | 265 | 227 |

| Model | P2 | | Q = Flow | | | | | | | | | | | | | | | |
|---|---|---|---|---|---|---|---|---|---|---|---|---|---|---|---|---|---|---|
| | | | m³/h | 0 | 54 | 60 | 65 | 70 | 75 | 80 | 85 | 90 | 95 | 100 | 110 | 120 | 132 |
| | | | l/min | | 900 | 1000 | 1080 | 1170 | 1250 | 1330 | 1420 | 1500 | 1580 | 1670 | 1830 | 2000 | 2200 |
| | kW | HP | H (m) = Total head | | | | | | | | | | | | | | | |
| I-8SDS 95/1C 6SM | 7.5 | 10 | | 27,4 | 25,1 | 24,7 | 24,3 | 23,9 | 23,4 | 22,9 | 22,3 | 21,6 | 20,9 | 20,1 | 18,3 | 16,2 | 13,3 |
| I-8SDS 95/1A 6SM | 9,2 | 12,5 | | 30 | 27,1 | 26,8 | 26,6 | 26,4 | 26 | 25,7 | 25,2 | 24,7 | 24,1 | 23,4 | 21,7 | 19,6 | 16,6 |
| I-8SDS 95/2F 6SM | 9,2 | 12,5 | | 38,2 | 34,9 | 33,8 | 32,7 | 31,5 | 30,2 | 28,7 | 27,1 | 25,3 | 23,4 | 21,3 | 16,6 | - | - |
| I-8SDS 95/2DF 6SM | 11 | 15 | | 44,4 | 40,9 | 40,1 | 39,2 | 38,1 | 36,9 | 35,5 | 33,9 | 32,3 | 30,4 | 28,5 | 24 | - | - |
| I-8SDS 95/2D 6SM | 13 | 17,5 | | 50,6 | 46,8 | 46,1 | 45,4 | 44,5 | 43,4 | 42,2 | 40,7 | 39,1 | 37,4 | 35,4 | 31 | 26,1 | 19,2 |
| I-8SDS 95/2C 6SM | 15 | 20 | | 54,8 | 50,6 | 49,8 | 49 | 48,1 | 47,2 | 46,1 | 44,8 | 43,5 | 42,1 | 40,5 | 36,9 | 32,8 | 26,8 |
| I-8SDS 95/2A 6SM | 18.5 | 25 | | 59,8 | 54,3 | 53,7 | 53,1 | 52,5 | 51,7 | 50,9 | 49,9 | 48,8 | 47,5 | 46,1 | 42,7 | 38,7 | 32,9 |
| I-8SDS 95/3DJ 6SM | 18.5 | 25 | | 71,7 | 66,9 | 65,8 | 64,6 | 63,2 | 61,5 | 59,5 | 57,3 | 54,9 | 52,2 | 49,3 | 42,9 | 35,8 | 25,7 |
| I-8SDS 95/3C 6SM | 22 | 30 | | 82 | 75,7 | 74,5 | 73,3 | 72,1 | 70,6 | 69 | 67,3 | 65,3 | 63,1 | 60,6 | 54,9 | 48,1 | 38,9 |
| I-8SDS 95/3A 6SM | 26 | 35 | | 89,8 | 82,4 | 81,5 | 80,6 | 79,5 | 78,3 | 76,9 | 75,3 | 73,6 | 71,6 | 69,5 | 64,5 | 58,7 | 50,1 |
| I-8SDS 95/4D 6SM | 26 | 35 | | 101 | 94,2 | 92,6 | 90,9 | 89 | 86,7 | 84,1 | 81,2 | 78 | 74,5 | 70,7 | 62,3 | 52,7 | 39,2 |
| I-8SDS 95/4C 6SM | 30 | 40 | | 109 | 102 | 99,6 | 98 | 96,3 | 94,3 | 92,1 | 89,6 | 86,9 | 84 | 80,7 | 73,4 | 64,9 | 52,8 |
| I-8SDS 95/4C 8SM | 30 | 40 | | 110 | 102 | 101 | 98,9 | 97,3 | 95,4 | 93,3 | 90,9 | 88,2 | 85,2 | 82 | 74,6 | 66 | 53,9 |
| I-8SDS 95/4A 6SM | 37 | 50 | | 119 | 110 | 109 | 107 | 106 | 105 | 103 | 101 | 98 | 95,3 | 92,3 | 85,2 | 76,8 | 64,9 |
| I-8SDS 95/4A 8SM | 37 | 50 | | 120 | 112 | 110 | 109 | 108 | 107 | 105 | 103 | 101 | 97,8 | 94,9 | 88,2 | 80,1 | 68,6 |
| I-8SDS 95/5KC 6SM | 37 | 50 | | 134 | 125 | 123 | 121 | 118 | 116 | 113 | 110 | 106 | 102 | 97,7 | 88 | 76,7 | 60,4 |
| I-8SDS 95/5KC 8SM | 37 | 50 | | 135 | 127 | 125 | 123 | 121 | 119 | 116 | 113 | 109 | 105 | 101 | 91,2 | 80,2 | 63,9 |
| I-8SDS 95/5A 6SM | 45 | 60 | | 149 | 137 | 136 | 134 | 132 | 130 | 128 | 125 | 122 | 119 | 115 | 106 | 95,2 | 80,7 |
| I-8SDS 95/5A 8SM | 45 | 60 | | 150 | 139 | 137 | 136 | 135 | 133 | 131 | 128 | 126 | 122 | 119 | 111 | 101 | 85,6 |
| I-8SDS 95/6QC 6SM | 45 | 60 | | 161 | 150 | 148 | 146 | 143 | 140 | 136 | 132 | 127 | 122 | 117 | 106 | 92 | 72,6 |
| I-8SDS 95/6QC 8SM | 45 | 60 | | 163 | 151 | 149 | 147 | 145 | 142 | 139 | 136 | 132 | 127 | 122 | 111 | 96,7 | 77,4 |
| I-8SDS 95/7ZC 8SM | 51 | 70 | | 186 | 174 | 172 | 169 | 166 | 163 | 159 | 154 | 149 | 144 | 138 | 124 | 109 | 84,9 |
| I-8SDS 95/7Z 8SM | 59 | 80 | | 203 | 188 | 186 | 184 | 182 | 179 | 176 | 172 | 168 | 163 | 158 | 146 | 131 | 111 |
| I-8SDS 95/8Z 8SM | 66 | 90 | | 233 | 215 | 212 | 210 | 207 | 204 | 201 | 197 | 192 | 187 | 181 | 167 | 150 | 126 |
| I-8SDS 95/10XC 8SM | 75 | 100 | | 273 | 254 | 250 | 246 | 242 | 237 | 232 | 226 | 219 | 212 | 204 | 185 | 163 | 131 |
| I-8SDS 95/10A 8SM | 92 | 125 | | 300 | 277 | 274 | 271 | 268 | 265 | 260 | 256 | 250 | 244 | 237 | 220 | 199 | 170 |
| I-8SDS 95/12C 8SM | 92 | 125 | | 329 | 308 | 304 | 300 | 295 | 289 | 282 | 275 | 266 | 257 | 247 | 225 | 200 | 165 |

**P2:** Rated motor power output.
**H:** Total head in m

# SDS

calpeda®

## Coverage chart n ≈ 2900 rpm

| Model | P2 | | Q = Flow | | | | | | | | | | | | |
|---|---|---|---|---|---|---|---|---|---|---|---|---|---|---|---|
| | | | m³/h | 0 | 72 | 80 | 90 | 100 | 110 | 120 | 130 | 140 | 150 | 160 | 168 |
| | | | l/min | | 1200 | 1330 | 1500 | 1670 | 1830 | 2000 | 2170 | 2330 | 2500 | 2670 | 2800 |
| | kW | HP | H (m) = Total head | | | | | | | | | | | | |
| I-8SDS 135/1F 6SM | 5.5 | 7.5 | | 20,4 | 17,1 | 16,6 | 15,8 | 14,9 | 13,8 | 12,6 | 11,4 | 10,1 | 8,8 | 7,3 | 6 |
| I-8SDS 135/1D 6SM | 7.5 | 10 | | 24,5 | 21,2 | 20,8 | 20,1 | 19,3 | 18,4 | 17,4 | 16,3 | 15,2 | 14 | 12,7 | 11,6 |
| I-8SDS 135/1B 6SM | 9,2 | 12,5 | | 27,2 | 23,9 | 23,4 | 22,8 | 22,1 | 21,2 | 20,2 | 19 | 17,8 | 16,5 | 15,1 | 14,1 |
| I-8SDS 135/2G 6SM | 9,2 | 12,5 | | 36,9 | 30,1 | 29 | 27,3 | 25,4 | 23,2 | 20,7 | 18,1 | 15,3 | 12,5 | 9,6 | 7,3 |
| I-8SDS 135/2F 6SM | 11 | 15 | | 40,8 | 34,3 | 33,2 | 31,7 | 29,8 | 27,8 | 25,5 | 23,2 | 20,7 | 18 | 14,9 | 11,9 |
| I-8SDS 135/2E 6SM | 13 | 17,5 | | 44,9 | 38,3 | 37,3 | 35,9 | 34,3 | 32,4 | 30,3 | 28 | 25,5 | 22,9 | 20,2 | 18 |
| I-8SDS 135/2D 6SM | 15 | 20 | | 48,9 | 42 | 41,1 | 39,7 | 38,2 | 36,4 | 34,4 | 32,3 | 29,9 | 27,4 | 24,9 | 22,7 |
| I-8SDS 135/2B 6SM | 18.5 | 25 | | 54,1 | 47,2 | 46,4 | 45,1 | 43,5 | 41,8 | 39,7 | 37,4 | 34,9 | 32,3 | 29,7 | 27,5 |
| I-8SDS 135/3E 6SM | 18.5 | 25 | | 66,9 | 56,9 | 55,5 | 53,5 | 51,1 | 48,3 | 45,1 | 41,6 | 37,7 | 33,7 | 29,5 | 26,3 |
| I-8SDS 135/3D 6SM | 22 | 30 | | 73 | 62,5 | 61 | 59,1 | 56,8 | 54,3 | 51,5 | 48,3 | 44,7 | 40,9 | 36,8 | 33,4 |
| I-8SDS 135/3B 6SM | 26 | 35 | | 81,2 | 70,5 | 69,1 | 67,2 | 65 | 62,5 | 59,5 | 56,2 | 52,5 | 48,5 | 44,4 | 41,1 |
| I-8SDS 135/4D 6SM | 30 | 40 | | 97,4 | 83,4 | 81,5 | 78,8 | 75,9 | 72,5 | 68,7 | 64,4 | 59,7 | 54,6 | 49,1 | 44,6 |
| I-8SDS 135/4D 8SM | 30 | 40 | | 97,9 | 84,6 | 82,7 | 80 | 76,9 | 73,4 | 69,6 | 65,3 | 60,8 | 55,9 | 50,5 | 45,8 |
| I-8SDS 135/4C 6SM | 37 | 50 | | 105 | 91,4 | 89,5 | 86,8 | 83,8 | 80,3 | 76,4 | 72,2 | 67,6 | 62,7 | 57,3 | 52,3 |
| I-8SDS 135/4C 8SM | 37 | 50 | | 106 | 93,1 | 91,4 | 88,8 | 85,7 | 82,2 | 78,3 | 74,1 | 69,6 | 64,8 | 59,5 | 54,6 |
| I-8SDS 135/5D 6SM | 37 | 50 | | 121 | 105 | 102 | 98,5 | 94,7 | 90,3 | 85,3 | 79,8 | 73,8 | 67,4 | 60,6 | 55 |
| I-8SDS 135/5D 8SM | 37 | 50 | | 123 | 106 | 104 | 101 | 96,3 | 92,1 | 87,4 | 82,3 | 76,6 | 70,5 | 63,8 | 57,9 |
| I-8SDS 135/5B 6SM | 45 | 60 | | 135 | 117 | 115 | 111 | 108 | 103 | 97,8 | 92,3 | 86,1 | 79,5 | 72,5 | 66,8 |
| I-8SDS 135/5B 8SM | 45 | 60 | | 136 | 120 | 117 | 114 | 111 | 107 | 102 | 95,9 | 89,4 | 82,4 | 75,4 | 70,1 |
| I-8SDS 135/6C 8SM | 51 | 70 | | 159 | 139 | 137 | 133 | 129 | 123 | 117 | 111 | 104 | 96,4 | 88,3 | 81 |
| I-8SDS 135/7C 8SM | 59 | 80 | | 186 | 163 | 160 | 155 | 150 | 143 | 137 | 129 | 122 | 114 | 104 | 95,2 |
| I-8SDS 135/7A 8SM | 66 | 90 | | 197 | 173 | 170 | 166 | 161 | 155 | 148 | 140 | 132 | 122 | 112 | 104 |
| I-8SDS 135/8C 8SM | 66 | 90 | | 212 | 186 | 183 | 178 | 172 | 165 | 157 | 148 | 138 | 128 | 117 | 107 |
| I-8SDS 135/8A 8SM | 75 | 100 | | 224 | 198 | 194 | 189 | 183 | 176 | 168 | 159 | 150 | 139 | 128 | 119 |
| I-8SDS 135/9C 8SM | 75 | 100 | | 238 | 208 | 204 | 198 | 191 | 183 | 175 | 165 | 155 | 143 | 131 | 120 |
| I-8SDS 135/10C 8SM | 92 | 125 | | 265 | 232 | 228 | 221 | 213 | 205 | 195 | 185 | 173 | 161 | 147 | 135 |
| I-8SDS 135/11C 8SM | 92 | 125 | | 290 | 254 | 249 | 242 | 234 | 224 | 214 | 202 | 190 | 176 | 161 | 148 |

**P2:** Rated motor power output.
**H:** Total head in m

# SDS

calpeda®

## Coverage chart n ≈ 2900 rpm

| Model | P2 | | Q = Flow | | | | | | | | | | | | |
|---|---|---|---|---|---|---|---|---|---|---|---|---|---|---|---|
| | | | m³/h | 0 | 90 | 100 | 120 | 140 | 160 | 180 | 192 | 198 | 200 | 220 | 240 |
| | | | l/min | | 1500 | 1670 | 2000 | 2330 | 2670 | 3000 | 3200 | 3300 | 3330 | 3670 | 4000 |
| | kW | HP | H (m) = Total head | | | | | | | | | | | | |
| I-10SDS 200/1F 6SM | 11 | 15 | | 27,8 | 24 | 23,4 | 21,7 | 19,3 | 16 | 11,5 | - | - | - | - | - |
| I-10SDS 200/1E 6SM | 13 | 17,5 | | 29,1 | 26,3 | 25,8 | 24,4 | 22,5 | 19,9 | 16,4 | 13,8 | 12,3 | - | - | - |
| I-10SDS 200/1DE 6SM | 15 | 20 | | 31,3 | 28,6 | 28 | 26,8 | 25 | 22,7 | 19,5 | 17,1 | 15,8 | 15,3 | - | - |
| I-10SDS 200/1D 6SM | 18.5 | 25 | | 33,6 | 30,7 | 30,1 | 28,7 | 27 | 25 | 22,3 | 20,2 | 19,1 | 18,7 | 14,2 | - |
| I-10SDS 200/1C 6SM | 22 | 30 | | 39 | 35,6 | 35,2 | 34,1 | 32,8 | 31 | 28,6 | 26,9 | 25,9 | 25,5 | 21,7 | 17 |
| I-10SDS 200/1B 6SM | 26 | 35 | | 44,3 | 40,3 | 39,8 | 38,7 | 37,4 | 35,7 | 33,8 | 32,4 | 31,6 | 31,4 | 28,3 | 24,2 |
| I-10SDS 200/2E 6SM | 26 | 35 | | 58,3 | 53 | 51,9 | 49 | 44,8 | 39,2 | 32 | 26,7 | 23,7 | - | - | - |
| I-10SDS 200/2DE 6SM | 30 | 40 | | 62,4 | 56,5 | 55,5 | 52,8 | 49,3 | 44,5 | 38,1 | 33,3 | 30,7 | 29,8 | - | - |
| I-10SDS 200/2DE 8SM | 30 | 40 | | 62,9 | 57,5 | 56,4 | 53,8 | 50,3 | 45,6 | 39,2 | 34,5 | 31,9 | 31,1 | - | - |
| I-10SDS 200/2CD 6SM | 37 | 50 | | 72,2 | 65,8 | 64,6 | 61,9 | 58,9 | 55,1 | 50 | 46,1 | 43,9 | 43,2 | 34,4 | - |
| I-10SDS 200/2CD 8SM | 37 | 50 | | 73 | 67,8 | 66,7 | 64,1 | 60,9 | 57 | 51,9 | 48,2 | 46,1 | 45,4 | 37 | - |
| I-10SDS 200/2BC 6SM | 45 | 60 | | 82,6 | 74,8 | 73,7 | 71,4 | 68,7 | 65,2 | 60,8 | 57,6 | 55,8 | 55,2 | 48,1 | - |
| I-10SDS 200/2BC 8SM | 45 | 60 | | 83,7 | 76,2 | 75,2 | 73 | 70,4 | 67,2 | 63,1 | 60 | 58,3 | 57,7 | 50,9 | - |
| I-10SDS 200/2AB 8SM | 51 | 70 | | 91,5 | 82,8 | 81,8 | 79,6 | 77,2 | 74,3 | 70,6 | 68 | 66,5 | 66 | 59,7 | 51,2 |
| I-10SDS 200/3D 8SM | 51 | 70 | | 99,6 | 93 | 91,7 | 88,4 | 83,8 | 77,8 | 70,2 | 64,8 | 61,9 | 60,8 | 48,9 | - |
| I-10SDS 200/3CD 8SM | 59 | 80 | | 109 | 101 | 99,6 | 96,6 | 92,6 | 87,2 | 80 | 74,7 | 71,8 | 70,7 | 58,9 | - |
| I-10SDS 200/3BC 8SM | 66 | 90 | | 125 | 115 | 113 | 111 | 108 | 103 | 96,8 | 92,1 | 89,5 | 88,6 | 78,1 | 66 |
| I-10SDS 200/3AB 8SM | 75 | 100 | | 136 | 123 | 122 | 120 | 117 | 114 | 109 | 106 | 104 | 103 | 92,7 | 80,2 |
| I-10SDS 200/4D 8SM | 66 | 90 | | 133 | 124 | 122 | 118 | 112 | 104 | 94,1 | 86,9 | 82,9 | 81,4 | 64,9 | - |
| I-10SDS 200/4BC 8SM | 92 | 125 | | 167 | 152 | 151 | 147 | 143 | 137 | 129 | 123 | 120 | 118 | 105 | 88,2 |
| I-10SDS 200/4A 8SM | 110 | 150 | | 185 | 170 | 168 | 165 | 161 | 157 | 152 | 147 | 144 | 143 | 131 | 114 |
| I-10SDS 200/5CD 8SM | 92 | 125 | | 180 | 167 | 164 | 159 | 153 | 144 | 132 | 123 | 118 | 117 | 96 | - |
| I-10SDS 200/5AB 8SM | 132 | 180 | | 229 | 210 | 208 | 203 | 199 | 194 | 187 | 181 | 177 | 176 | 161 | 142 |
| I-10SDS 200/6CD 8SM | 110 | 150 | | 217 | 200 | 197 | 191 | 183 | 172 | 158 | 147 | 141 | 139 | 115 | - |
| I-10SDS 200/6BC 8SM | 132 | 180 | | 253 | 232 | 229 | 224 | 218 | 210 | 198 | 189 | 184 | 182 | 161 | - |
| I-10SDS 200/6B 8SM | 150 | 200 | | 269 | 246 | 244 | 239 | 234 | 227 | 217 | 209 | 204 | 203 | 184 | 159 |
| I-10SDS 200/7C 8SM | 150 | 200 | | 276 | 255 | 252 | 246 | 238 | 227 | 211 | 200 | 194 | 192 | 168 | 141 |
| I-10SDS 200/7AB 8SM | 185 | 250 | | 321 | 294 | 291 | 286 | 280 | 273 | 263 | 255 | 250 | 248 | 228 | 200 |
| I-10SDS 200/8C 12SM | 170 | 230 | | 318 | 294 | 291 | 284 | 276 | 264 | 248 | 236 | 229 | 226 | 197 | 161 |
| I-10SDS 200/8C 8SM | 165 | 220 | | 316 | 292 | 289 | 282 | 273 | 261 | 245 | 232 | 224 | 222 | 192 | 155 |
| I-10SDS 200/8B 8SM | 185 | 250 | | 359 | 328 | 323 | 316 | 309 | 301 | 288 | - | - | - | - | - |
| I-10SDS 200/8A 12SM | 220 | 300 | | 373 | 343 | 340 | 334 | 327 | 319 | 308 | 299 | 294 | 292 | 270 | 241 |
| I-10SDS 200/9C 12SM | 190 | 260 | | 358 | 330 | 327 | 320 | 311 | 298 | 280 | 265 | 257 | 254 | 223 | 189 |
| I-10SDS 200/9A 12SM | 250 | 340 | | 420 | 386 | 383 | 376 | 369 | 361 | 349 | 339 | 333 | 331 | 305 | 270 |
| I-10SDS 200/10A 12SM | 280 | 380 | | 469 | 432 | 428 | 421 | 413 | 404 | 391 | 380 | 374 | 372 | 345 | 311 |
| I-10SDS 200/11B 12SM | 280 | 380 | | 494 | 461 | 456 | 446 | 434 | 419 | 401 | 388 | 381 | 379 | 348 | 303 |
| I-10SDS 200/11A 12SM | 300 | 400 | | 512 | 474 | 470 | 461 | 450 | 437 | 422 | 411 | 405 | 403 | 376 | 333 |
| I-10SDS 200/12JD 12SM | 240 | 330 | | 453 | 421 | 416 | 406 | 392 | 373 | 347 | 327 | 315 | 311 | 265 | 209 |
| I-10SDS 200/13D 12SM | 220 | 300 | | 435 | 409 | 404 | 391 | 372 | 348 | 317 | 295 | 283 | 278 | 227 | - |
| I-10SDS 200/14D 12SM | 250 | 340 | | 469 | 445 | 440 | 425 | 403 | 374 | 340 | 317 | 304 | 300 | 249 | - |

**P2:** Rated motor power output.
**H:** Total head in m

# SDS

calpeda®

## Coverage chart n ≈ 2900 rpm

| Model | P2 | | Q = Flow | | | | | | | | | | | | | | | |
|---|---|---|---|---|---|---|---|---|---|---|---|---|---|---|---|---|---|---|
| | | | m³/h | 0 | 120 | 140 | 160 | 180 | 200 | 220 | 240 | 260 | 272 | 288 | 296 | 300 | 315 | 324 |
| | | | l/min | | 2000 | 2330 | 2670 | 3000 | 3330 | 3670 | 4000 | 4330 | 4530 | 4800 | 4930 | 5000 | 5250 | 5400 |
| | kW | HP | H (m) = Total head | | | | | | | | | | | | | | | |
| I-10SDS 250/1I 6SM | 13 | 17,5 | | 26,7 | 21,2 | 20,5 | 19,6 | 18,2 | 16,2 | 13,8 | - | - | - | - | - | - | - | - |
| I-10SDS 250/1H 6SM | 15 | 20 | | 28,4 | 23,2 | 22,4 | 21,4 | 20,2 | 18,6 | 16,6 | 14,3 | 11,8 | - | - | - | - | - | - |
| I-10SDS 250/1F 6SM | 18.5 | 25 | | 32,4 | 27,5 | 26,8 | 26,1 | 25 | 23,6 | 21,8 | 19,6 | 17,2 | - | - | - | - | - | - |
| I-10SDS 250/1DE 6SM | 22 | 30 | | 35,4 | 30,6 | 29,9 | 29,1 | 28,2 | 26,9 | 25,4 | 23,5 | 21,3 | - | - | - | - | - | - |
| I-10SDS 250/1C 6SM | 26 | 35 | | 39,3 | 34 | 33,4 | 32,7 | 31,8 | 30,6 | 29,2 | 27,4 | 25,4 | 24,1 | 22,1 | 21,1 | - | - | - |
| I-10SDS 250/1A 6SM | 30 | 40 | | 45,6 | 37,4 | 36,7 | 36,2 | 35,6 | 34,8 | 33,8 | 32,3 | 30,6 | 29,3 | 27,5 | 26,6 | 26,1 | - | - |
| I-10SDS 250/1A 8SM | 30 | 40 | | 46 | 37,9 | 37,3 | 36,8 | 36,3 | 35,6 | 34,6 | 33,2 | 31,4 | 30,1 | 28,3 | 27,3 | 26,8 | - | - |
| I-10SDS 250/2HI 6SM | 26 | 35 | | 54,8 | 44 | 42,4 | 40,5 | 38 | 34,5 | 30,2 | - | - | - | - | - | - | - | - |
| I-10SDS 250/2H 6SM | 30 | 40 | | 56,6 | 46,2 | 44,6 | 42,7 | 40,3 | 37,2 | 33,3 | 28,6 | 23,7 | - | - | - | - | - | - |
| I-10SDS 250/2H 8SM | 30 | 40 | | 57,1 | 46,9 | 45,3 | 43,4 | 41,1 | 38,1 | 34,2 | 29,6 | 24,7 | - | - | - | - | - | - |
| I-10SDS 250/2F 6SM | 37 | 50 | | 64,6 | 54,6 | 53,3 | 51,7 | 49,7 | 46,9 | 43,2 | 38,8 | 34,1 | - | - | - | - | - | - |
| I-10SDS 250/2F 8SM | 37 | 50 | | 65,6 | 55,8 | 54,5 | 53,1 | 51,2 | 48,6 | 45,1 | 40,8 | 36 | - | - | - | - | - | - |
| I-10SDS 250/2G 6SM | 37 | 50 | | 60,4 | 49,9 | 48,2 | 46,5 | 44,4 | 41,8 | 38,5 | 34,4 | 29,7 | - | - | - | - | - | - |
| I-10SDS 250/2G 8SM | 37 | 50 | | 61,2 | 51 | 49,4 | 47,8 | 45,8 | 43,3 | 40 | 36 | 31,2 | - | - | - | - | - | - |
| I-10SDS 250/2DE 6SM | 45 | 60 | | 70,4 | 61 | 59,7 | 58,2 | 56,3 | 53,7 | 50,5 | 46,5 | 42,3 | - | - | - | - | - | - |
| I-10SDS 250/2DE 8SM | 45 | 60 | | 71,5 | 62,3 | 61,1 | 59,7 | 57,9 | 55,5 | 52,4 | 48,6 | 44,3 | - | - | - | - | - | - |
| I-10SDS 250/2C 8SM | 51 | 70 | | 79,4 | 68,8 | 67,5 | 66,1 | 64,5 | 62,4 | 59,7 | 56,3 | 52,1 | 49,4 | 45,6 | 43,7 | - | - | - |
| I-10SDS 250/2A 8SM | 59 | 80 | | 90,8 | 78,3 | 77 | 75,8 | 74,4 | 72,7 | 70,3 | 67,1 | 63,1 | 60,3 | 56,5 | 54,6 | 53,7 | - | - |
| I-10SDS 250/3EF 8SM | 59 | 80 | | 99,8 | 89,3 | 87,6 | 85,4 | 82,3 | 78,3 | 73,3 | 67,6 | 61,3 | 57,3 | - | - | - | - | - |
| I-10SDS 250/3JE 8SM | 66 | 90 | | 108 | 95,7 | 94 | 92 | 89,4 | 85,8 | 81,1 | 75,5 | 69 | 65 | 60,1 | - | - | - | - |
| I-10SDS 250/3C 8SM | 75 | 100 | | 119 | 106 | 104 | 102 | 98,5 | 95 | 90,7 | 85,5 | 79,6 | 75,7 | 70,4 | 67,7 | 66,4 | 61,6 | 59,1 |
| I-10SDS 250/3A 8SM | 92 | 125 | | 135 | 120 | 118 | 116 | 114 | 111 | 108 | 103 | 96,8 | 92,9 | 87 | 83,9 | 82,2 | 75,7 | 71,5 |
| I-10SDS 250/4EF 8SM | 75 | 100 | | 132 | 118 | 116 | 112 | 108 | 103 | 95,5 | 87,8 | 79,5 | 74,4 | - | - | - | - | - |
| I-10SDS 250/4D 8SM | 92 | 125 | | 146 | 131 | 129 | 126 | 123 | 118 | 112 | 104 | 95,7 | 90,4 | 83,2 | 79,6 | 77,7 | 70,9 | 66,9 |
| I-10SDS 250/4M 8SM | 110 | 150 | | 170 | 151 | 148 | 146 | 143 | 139 | 134 | 128 | 120 | 114 | 107 | 102 | 100 | 92,5 | - |
| I-10SDS 250/5JE 8SM | 110 | 150 | | 180 | 161 | 158 | 154 | 149 | 143 | 136 | 126 | 116 | 110 | - | - | - | - | - |
| I-10SDS 250/5BC 8SM | 132 | 180 | | 205 | 183 | 180 | 177 | 174 | 169 | 162 | 154 | 144 | 137 | 127 | 121 | 118 | 107 | 99,3 |
| I-10SDS 250/5A 8SM | 150 | 200 | | 224 | 201 | 199 | 196 | 193 | 189 | 184 | 177 | 168 | 162 | 153 | 147 | 145 | 134 | 127 |
| I-10SDS 250/6QC 8SM | 150 | 200 | | 236 | 211 | 208 | 204 | 199 | 193 | 184 | 174 | 163 | 155 | 144 | 138 | 135 | 124 | 116 |
| I-10SDS 250/6S 8SM | 165 | 220 | | 254 | 227 | 223 | 220 | 216 | 211 | 203 | 194 | 183 | 175 | 163 | 157 | 154 | 142 | 135 |
| I-10SDS 250/6MN 12SM | 170 | 230 | | 261 | 234 | 231 | 228 | 224 | 219 | 212 | 203 | 191 | 182 | 170 | 164 | 161 | 150 | 144 |
| I-10SDS 250/6A 8SM | 185 | 250 | | 269 | 242 | 239 | 236 | 233 | 228 | 222 | 214 | 203 | 196 | 184 | 178 | 175 | 162 | 154 |
| I-10SDS 250/7V 12SM | 190 | 260 | | 290 | 262 | 258 | 255 | 250 | 243 | 235 | 224 | 211 | 202 | 188 | 181 | 177 | 163 | 153 |
| I-10SDS 250/8B 12SM | 220 | 300 | | 338 | 302 | 297 | 293 | 288 | 280 | 271 | 258 | 242 | 231 | 215 | 207 | 203 | 188 | 180 |
| I-10SDS 250/8N 12SM | 240 | 330 | | 356 | 320 | 316 | 312 | 308 | 302 | 294 | 283 | 269 | 259 | - | - | - | - | - |
| I-10SDS 250/9B 12SM | 250 | 340 | | 381 | 340 | 335 | 330 | 324 | 316 | 305 | 291 | 273 | 260 | 243 | 233 | 229 | 212 | 202 |
| I-10SDS 250/10B 12SM | 280 | 380 | | 426 | 381 | 376 | 371 | 365 | 356 | 343 | 327 | 308 | 294 | 275 | 265 | 260 | 241 | 230 |
| I-10SDS 250/10A 12SM | 300 | 400 | | 449 | 402 | 397 | 392 | 386 | 379 | 369 | 355 | 337 | 324 | 304 | 293 | 288 | 266 | 253 |

**P2:** Rated motor power output.
**H:** Total head in m

# SDS

calpeda®

## Coverage chart n ≈ 2900 rpm

| Model | P2 | | Q = Flow | | | | | | | | | | | | | | |
|---|---|---|---|---|---|---|---|---|---|---|---|---|---|---|---|---|---|
| | | | m³/h | 0 | 180 | 200 | 220 | 240 | 260 | 280 | 300 | 324 | 340 | 360 | 385 | 400 | 432 |
| | | | l/min | | 3000 | 3330 | 3670 | 4000 | 4330 | 4670 | 5000 | 5400 | 5670 | 6000 | 6420 | 6670 | 7200 |
| | kW | HP | H (m) = Total head | | | | | | | | | | | | | | |
| I-10SDS 315/1CD 6SM | 26 | 35 | | 36,3 | 28,5 | 27,6 | 26,6 | 25,5 | 24,4 | 23,2 | 21,8 | 19,8 | 18,3 | 16,1 | - | - | - |
| I-10SDS 315/1BC 6SM | 30 | 40 | | 39,2 | 31,7 | 30,8 | 29,9 | 28,9 | 27,8 | 26,6 | 25,3 | 23,5 | 22,1 | 20,2 | - | - | - |
| I-10SDS 315/1BC 8SM | 30 | 40 | | 39,6 | 32,2 | 31,3 | 30,4 | 29,4 | 28,4 | 27,2 | 25,9 | 24,1 | 22,8 | 20,9 | - | - | - |
| I-10SDS 315/1AB 6SM | 37 | 50 | | 43,9 | 35 | 34,2 | 33,4 | 32,6 | 31,7 | 30,6 | 29,4 | 27,8 | 26,5 | 24,8 | 22,2 | - | - |
| I-10SDS 315/1AB 8SM | 37 | 50 | | 44,6 | 35,8 | 35 | 34,2 | 33,4 | 32,5 | 31,6 | 30,5 | 28,9 | 27,6 | 25,9 | 23,3 | - | - |
| I-10SDS 315/2DE 6SM | 45 | 60 | | 67,3 | 51 | 49,1 | 47,1 | 45 | 42,7 | 40,1 | 37 | 32,3 | - | - | - | - | - |
| I-10SDS 315/2DE 8SM | 45 | 60 | | 68,3 | 52,8 | 51 | 49,1 | 47 | 44,6 | 41,8 | 38,3 | 33 | - | - | - | - | - |
| I-10SDS 315/2CD 8SM | 51 | 70 | | 73,4 | 58,3 | 56,4 | 54,5 | 52,5 | 50,4 | 48,1 | 45,4 | 41,7 | 38,8 | 34,6 | - | - | - |
| I-10SDS 315/2BC 8SM | 59 | 80 | | 79,8 | 65 | 63,3 | 61,6 | 59,7 | 57,8 | 55,6 | 53,1 | 49,6 | 46,8 | 42,9 | - | - | - |
| I-10SDS 315/2B 8SM | 66 | 90 | | 83 | 68,7 | 67,2 | 65,5 | 63,7 | 61,7 | 59,4 | 56,8 | 53,3 | 50,7 | 47,1 | 42,2 | - | - |
| I-10SDS 315/2A 8SM | 75 | 100 | | 93,6 | 75,6 | 74,2 | 72,9 | 71,4 | 69,8 | 67,9 | 65,5 | 61,9 | 59,2 | 55,3 | 50,2 | - | - |
| I-10SDS 315/3W 8SM | 92 | 125 | | 124 | 102 | 98,6 | 95,9 | 93,1 | 90,2 | 86,9 | 83,2 | 78 | 74 | 68,2 | 59,8 | 54,1 | 40,5 |
| I-10SDS 315/3A 8SM | 110 | 150 | | 139 | 117 | 116 | 114 | 111 | 109 | 105 | 102 | 95,7 | 91,7 | 86,3 | 78,7 | 73,7 | 61,2 |
| I-10SDS 315/4B 8SM | 132 | 180 | | 172 | 142 | 139 | 135 | 132 | 128 | 124 | 119 | 112 | 107 | 99,5 | 88,9 | 81,7 | 63,8 |
| I-10SDS 315/4A 8SM | 150 | 200 | | 188 | 159 | 157 | 155 | 152 | 148 | 144 | 139 | 132 | 127 | 121 | 111 | 105 | 88,6 |
| I-10SDS 315/5B 8SM | 165 | 220 | | 214 | 178 | 174 | 170 | 165 | 160 | 155 | 149 | 140 | 134 | 125 | 112 | 103 | 80,1 |
| I-10SDS 315/5M 12SM | 170 | 230 | | 225 | 188 | 184 | 181 | 177 | 173 | 168 | 162 | 153 | 146 | 137 | 123 | - | - |
| I-10SDS 315/5I 8SM | 185 | 250 | | 231 | 195 | 192 | 189 | 185 | 181 | 176 | 170 | 161 | 155 | 146 | 134 | 126 | 109 |
| I-10SDS 315/5A 12SM | 190 | 260 | | 237 | 201 | 198 | 195 | 191 | 187 | 182 | 177 | 169 | 163 | 154 | 142 | 135 | 115 |
| I-10SDS 315/6I 12SM | 220 | 300 | | 279 | 233 | 230 | 226 | 223 | 218 | 212 | 205 | 195 | 186 | 175 | 159 | - | - |
| I-10SDS 315/7X 12SM | 250 | 340 | | 313 | 260 | 255 | 250 | 245 | 240 | 233 | 225 | 212 | 203 | 189 | 170 | - | - |
| I-10SDS 315/7A 12SM | 280 | 380 | | 332 | 281 | 277 | 273 | 269 | 263 | 256 | 248 | 236 | 228 | 216 | 199 | 188 | 159 |
| I-10SDS 315/8A 12SM | 300 | 400 | | 377 | 316 | 312 | 307 | 301 | 295 | 287 | 278 | 264 | 254 | 240 | 219 | 206 | 172 |

**P2:** Rated motor power output.
**H:** Total head in m

# SDS

calpeda®

## Coverage chart n ≈ 2900 rpm

| Model | P2 | | Q = Flow | | | | | | | | | | | | | | | | | | | | | |
|---|---|---|---|---|---|---|---|---|---|---|---|---|---|---|---|---|---|---|---|---|---|---|---|---|
| | | | m³/h | 0 | 144 | 162 | 180 | 198 | 216 | 234 | 300 | 385 | 450 | 457 | 480 | 499 | 521 | 540 | 544 | 568 | 594 | 630 | 660 |
| | | | l/min | | 2400 | 2700 | 3000 | 3300 | 3600 | 3900 | 5000 | 6420 | 7500 | 7620 | 8000 | 8320 | 8680 | 9000 | 9070 | 9470 | 9900 | 10500 | 11000 |
| | kW | HP | H (m) = Total head | | | | | | | | | | | | | | | | | | | | |
| I-12SDS 430/1D 8SM | 37 | 50 | | 43,2 | - | 36,9 | 36,3 | 35,8 | 35,2 | 34,7 | 31,9 | 26 | 19,9 | - | - | - | - | - | - | - | - | - | - |
| I-12SDS 430/1CJ 8SM | 45 | 60 | | 46,5 | - | 40,7 | 40,3 | 39,9 | 39,4 | 38,9 | 36,1 | 30,4 | 24,7 | 24,1 | 21,7 | - | - | - | - | - | - | - | - |
| I-12SDS 430/1CD 8SM | 51 | 70 | | 48,1 | - | - | 42 | 41,6 | 41,2 | 40,7 | 38,1 | 32,7 | 27,5 | 26,8 | 24,7 | 22,6 | - | - | - | - | - | - | - |
| I-12SDS 430/1C 8SM | 59 | 80 | | 53,4 | - | - | 47,4 | 47,1 | 46,8 | 46,4 | 44,3 | 39,4 | 34,4 | 33,8 | 31,9 | 30,3 | 28,2 | 26,1 | 25,7 | - | - | - | - |
| I-12SDS 430/1BC 8SM | 66 | 90 | | 56,5 | - | - | 49,6 | 49,3 | 49 | 48,6 | 46,8 | 42,3 | 37,4 | 36,9 | 34,9 | 33,2 | 31,1 | 29,1 | 28,7 | - | - | - | - |
| I-12SDS 430/1B 8SM | 75 | 100 | | 59,7 | - | - | 52,1 | 51,7 | 51,3 | 50,9 | 49,2 | 45,3 | 40,7 | 40,2 | 38,3 | 36,6 | 34,6 | 32,6 | 32,2 | 29,4 | - | - | - |
| I-12SDS 430/1A 8SM | 92 | 125 | | 67,4 | - | - | 57,9 | 57,4 | 57 | 56,6 | 55,2 | 52,2 | 48,4 | 47,9 | 46,1 | 44,6 | 42,6 | 40,8 | 40,4 | 37,9 | 34,8 | - | - |
| I-12SDS 430/2E 8SM | 59 | 80 | | 80,5 | 73,6 | 72,8 | 71,9 | 70,8 | 69,4 | 67,7 | 58,4 | 41 | - | - | - | - | - | - | - | - | - | - | - |
| I-12SDS 430/2DE 8SM | 66 | 90 | | 85,2 | 77,9 | 77,2 | 76,3 | 75,2 | 73,9 | 72,3 | 63,4 | 47,6 | 34,3 | - | - | - | - | - | - | - | - | - | - |
| I-12SDS 430/2D 8SM | 75 | 100 | | 89,8 | - | 81,9 | 81 | 80,1 | 78,8 | 77,4 | 69,4 | 54,2 | 41,6 | - | - | - | - | - | - | - | - | - | - |
| I-12SDS 430/2CD 8SM | 92 | 125 | | 99 | - | - | 90,5 | 89,7 | 88,8 | 87,6 | 81,1 | 68,5 | 56,1 | 54,5 | - | - | - | - | - | - | - | - | - |
| I-12SDS 430/2C 8SM | 110 | 150 | | 108 | - | - | - | 99 | 98,3 | 97,5 | 93 | 82,1 | 69,9 | 68,5 | 63,6 | 59,6 | 54,9 | 50,7 | 49,9 | 44,6 | 38,8 | - | - |
| I-12SDS 430/2B 8SM | 132 | 180 | | 123 | - | - | - | 113 | 113 | 112 | 108 | 98 | 87,3 | 86 | 81,6 | 77,8 | 73,1 | 69 | 68,1 | 62,7 | 56,5 | 47,2 | - |
| I-12SDS 430/2AB 8SM | 150 | 200 | | 129 | - | - | - | - | 117 | 116 | 112 | 104 | 93,4 | 92,2 | 88 | 84,4 | 80 | 76 | 75,2 | 69,9 | 64 | 55,1 | - |
| I-12SDS 430/2A 12SM | 170 | 230 | | 136 | - | - | - | - | 123 | 122 | 118 | 111 | 101 | 99,9 | 95,9 | 92,5 | 88,3 | 84,6 | 83,8 | 78,9 | 73,4 | 65,1 | 57,2 |
| I-12SDS 430/2A 8SM | 185 | 250 | | 136 | - | - | - | - | 122 | 121 | 117 | 109 | 99,7 | 98,6 | 94,8 | 91,5 | 87,5 | 83,9 | 83,1 | 78,4 | 72,8 | 64,2 | 55,5 |
| I-12SDS 430/3CJ 8SM | 132 | 180 | | 141 | - | - | - | 127 | 126 | 124 | 116 | 97,6 | 79,1 | 76,9 | - | - | - | - | - | - | - | - | - |
| I-12SDS 430/3JD 8SM | 150 | 200 | | 151 | - | - | - | 137 | 136 | 135 | 127 | 111 | 92,6 | 90,5 | 83,4 | - | - | - | - | - | - | - | - |
| I-12SDS 430/3C 12SM | 170 | 230 | | 163 | - | - | - | - | 149 | 148 | 141 | 127 | 110 | 108 | 100 | 93,9 | 86,9 | - | - | - | - | - | - |
| I-12SDS 430/3Q 8SM | 185 | 250 | | 169 | - | - | - | - | 154 | 152 | 146 | 132 | 116 | 114 | 107 | 101 | 93,5 | 87,3 | - | - | - | - | - |
| I-12SDS 430/3W 12SM | 190 | 260 | | 176 | - | - | - | - | 161 | 160 | 153 | 140 | 124 | 122 | 115 | 110 | 103 | 96 | 94,7 | 86,7 | 78,1 | 66,1 | - |
| I-12SDS 430/3AB 12SM | 220 | 300 | | 192 | - | - | - | - | - | 172 | 166 | 153 | 139 | 138 | 132 | 127 | 121 | 115 | 114 | 106 | 97,3 | 83,8 | - |
| I-12SDS 430/3A 12SM | 250 | 340 | | 203 | - | - | - | - | - | - | 174 | 162 | 149 | 148 | 142 | 138 | 132 | 126 | 125 | 117 | 109 | 95,4 | 83,3 |
| I-12SDS E430/4D 12SM | 170 | 230 | | 175 | - | - | - | 158 | 156 | 154 | 142 | 116 | 90,3 | - | - | - | - | - | - | - | - | - | - |
| I-12SDS E430/4CD 8SM | 185 | 250 | | 195 | - | - | - | 177 | 176 | 173 | 162 | 139 | 115 | 112 | 103 | - | - | - | - | - | - | - | - |
| I-12SDS E430/4CD 12SM | 190 | 260 | | 196 | - | - | - | 178 | 177 | 175 | 165 | 142 | 119 | 116 | 106 | - | - | - | - | - | - | - | - |
| I-12SDS E430/4C 12SM | 220 | 300 | | 216 | - | - | - | - | 196 | 195 | 186 | 166 | 144 | 141 | 132 | 124 | 115 | - | - | - | - | - | - |
| I-12SDS E430/4M 12SM | 280 | 380 | | 250 | - | - | - | - | - | 226 | 218 | 201 | 182 | 180 | 172 | 165 | 156 | 148 | 146 | 136 | 124 | 108 | 94 |
| I-12SDS E430/4I 12SM | 300 | 400 | | 263 | - | - | - | - | - | 233 | 225 | 210 | 191 | 189 | 181 | 174 | 166 | 158 | 156 | 146 | 134 | 117 | 99,5 |
| I-12SDS E430/4A 12SM | 340 | 460 | | 272 | - | - | - | - | - | - | 234 | 218 | 201 | 199 | 192 | 185 | 178 | 171 | 169 | 160 | 149 | 132 | 115 |
| I-12SDS E430/5JD 12SM | 250 | 340 | | 252 | - | - | - | - | 228 | 225 | 213 | 185 | 156 | 152 | 140 | 130 | - | - | - | - | - | - | - |
| I-12SDS E430/5C 12SM | 280 | 380 | | 271 | - | - | - | - | 248 | 246 | 235 | 210 | 181 | 178 | 166 | 156 | 145 | - | - | - | - | - | - |
| I-12SDS E430/5BC 12SM | 300 | 400 | | 286 | - | - | - | - | 260 | 258 | 247 | 223 | 197 | 193 | 182 | 172 | 161 | 150 | - | - | - | - | - |
| I-12SDS E430/5B 12SM | 340 | 460 | | 305 | - | - | - | 279 | 277 | 275 | 267 | 245 | 221 | 218 | 207 | 198 | 187 | 177 | 175 | - | - | - | - |
| I-12SDS E430/5MN 12SM | 350 | 475 | | 309 | - | - | - | - | 281 | 278 | 268 | 247 | 223 | 220 | 210 | 201 | 189 | 179 | 177 | 164 | 149 | 128 | - |
| I-12SDS E430/5K 12SM | 370 | 500 | | 325 | - | - | - | - | - | 290 | 280 | 260 | 237 | 235 | 225 | 216 | 206 | 197 | 195 | 182 | 168 | 145 | - |
| I-12SDS E430/5A 12SM | 400 | 540 | | 337 | - | - | - | - | - | - | 287 | 267 | 246 | 243 | 234 | 226 | 216 | 207 | 205 | 193 | 179 | 157 | 137 |
| I-12SDS E430/6BJ 12SM | 350 | 475 | | 333 | - | - | - | - | 304 | 301 | 288 | 259 | 226 | 222 | 208 | 196 | 182 | 170 | - | - | - | - | - |
| I-12SDS E430/7D 12SM | 280 | 380 | | 305 | - | - | - | 276 | 272 | 268 | 247 | 203 | 159 | - | - | - | - | - | - | - | - | - | - |
| I-12SDS E430/7QC 12SM | 370 | 500 | | 367 | - | - | - | - | 333 | 329 | 313 | 278 | 238 | 233 | 216 | 202 | 185 | - | - | - | - | - | - |
| I-12SDS E430/7C 12SM | 400 | 540 | | 377 | - | - | - | - | 342 | 339 | 324 | 288 | 248 | 243 | 227 | 213 | 197 | - | - | - | - | - | - |
| I-12SDS E430/8D 12SM | 300 | 400 | | 347 | - | - | 313 | 310 | 306 | 302 | 277 | 224 | 173 | - | - | - | - | - | - | - | - | - | - |
| I-12SDS E430/9D 12SM | 350 | 475 | | 390 | - | - | - | 350 | 346 | 340 | 313 | 257 | 199 | - | - | - | - | - | - | - | - | - | - |
| I-12SDS E430/11D 12SM | 400 | 540 | | 476 | - | - | 429 | 424 | 419 | 412 | 377 | 305 | 237 | - | - | - | - | - | - | - | - | - | - |

**P2:** Rated motor power output.
**H:** Total head in m

# SDS

## Coverage chart n ≈ 2900 rpm

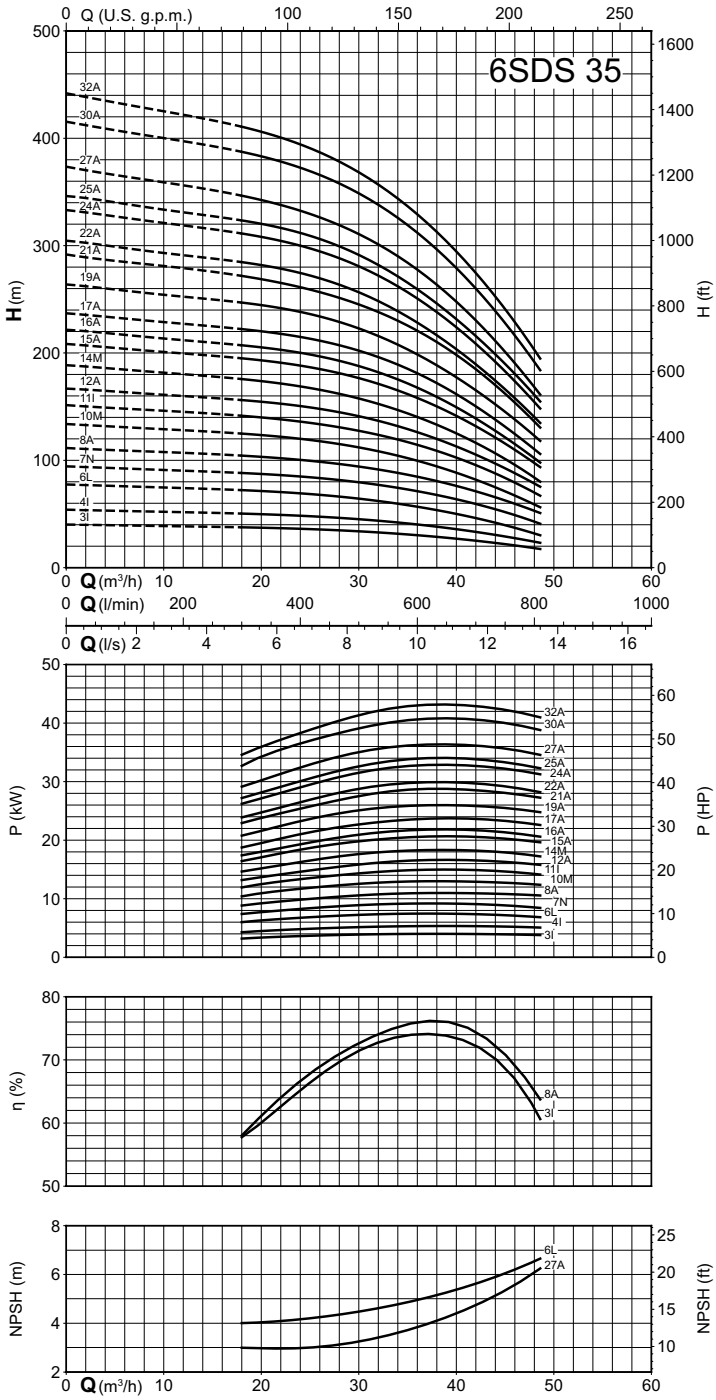


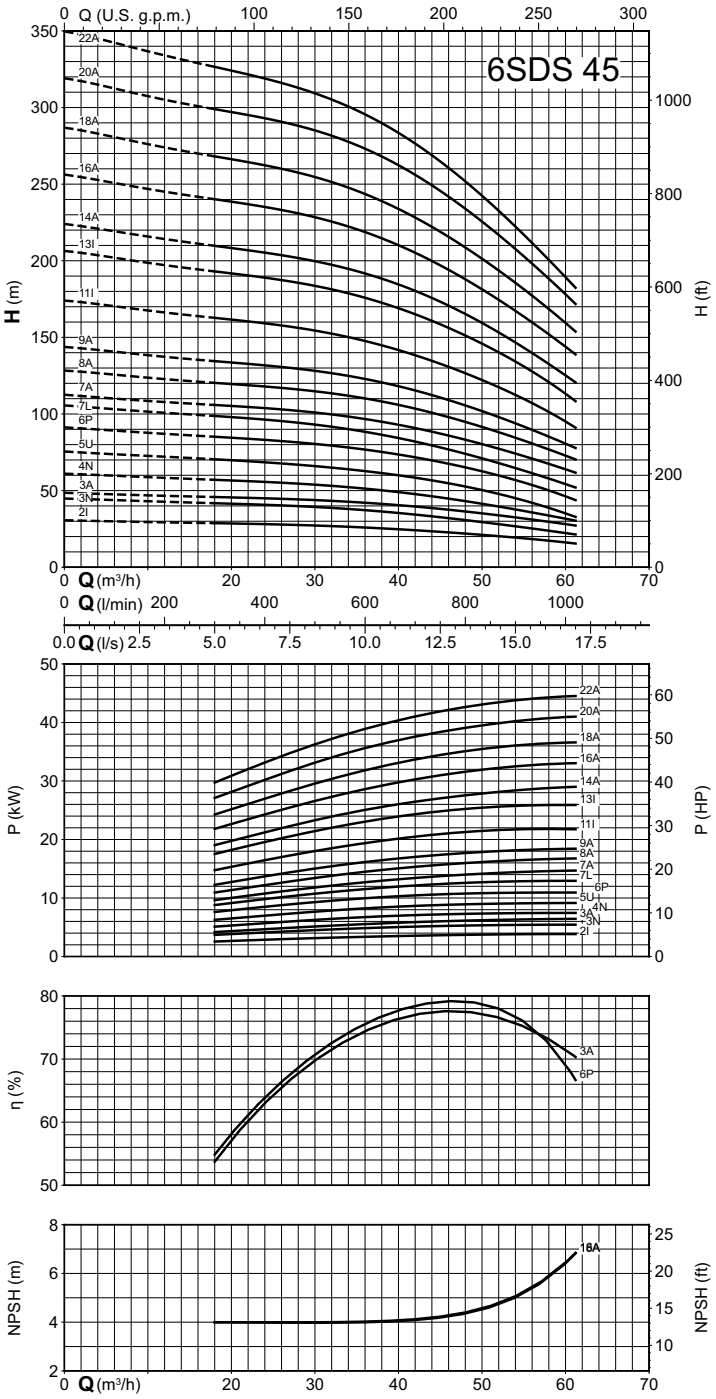

# SDS

## Coverage chart n ≈ 2900 rpm

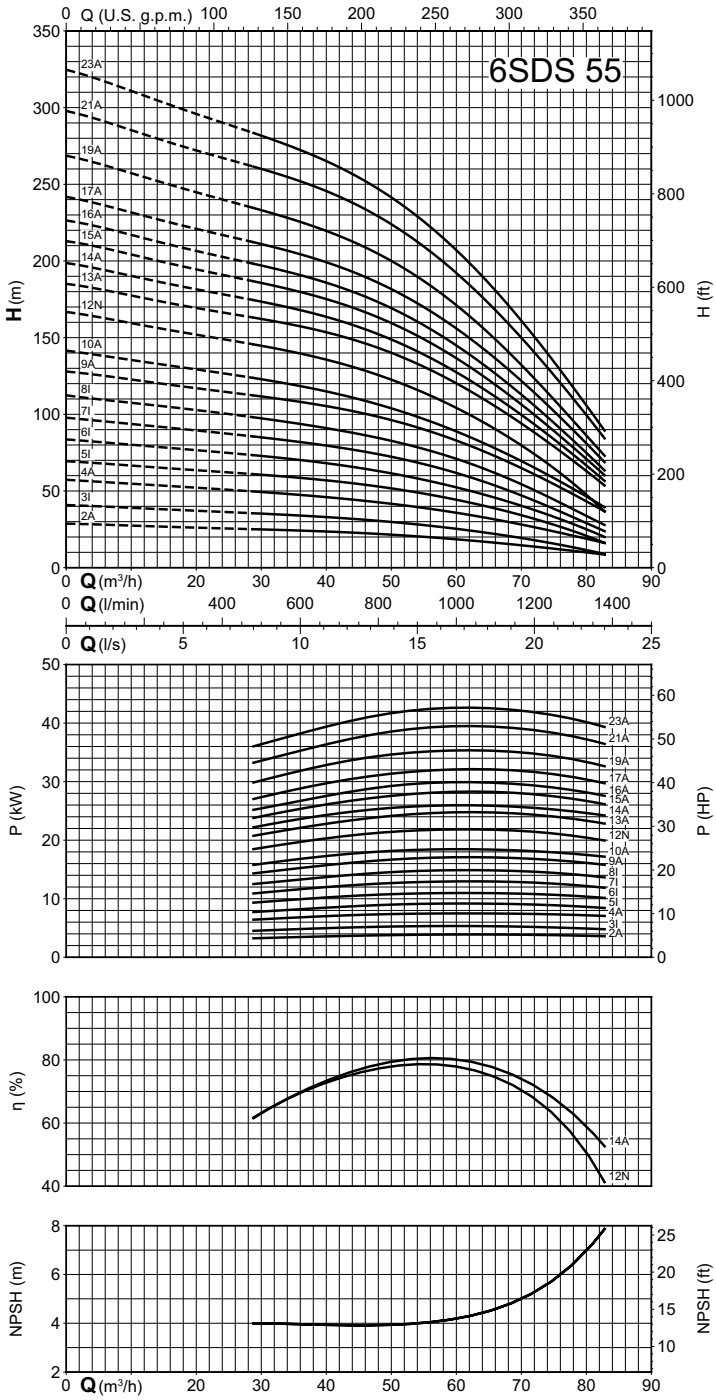


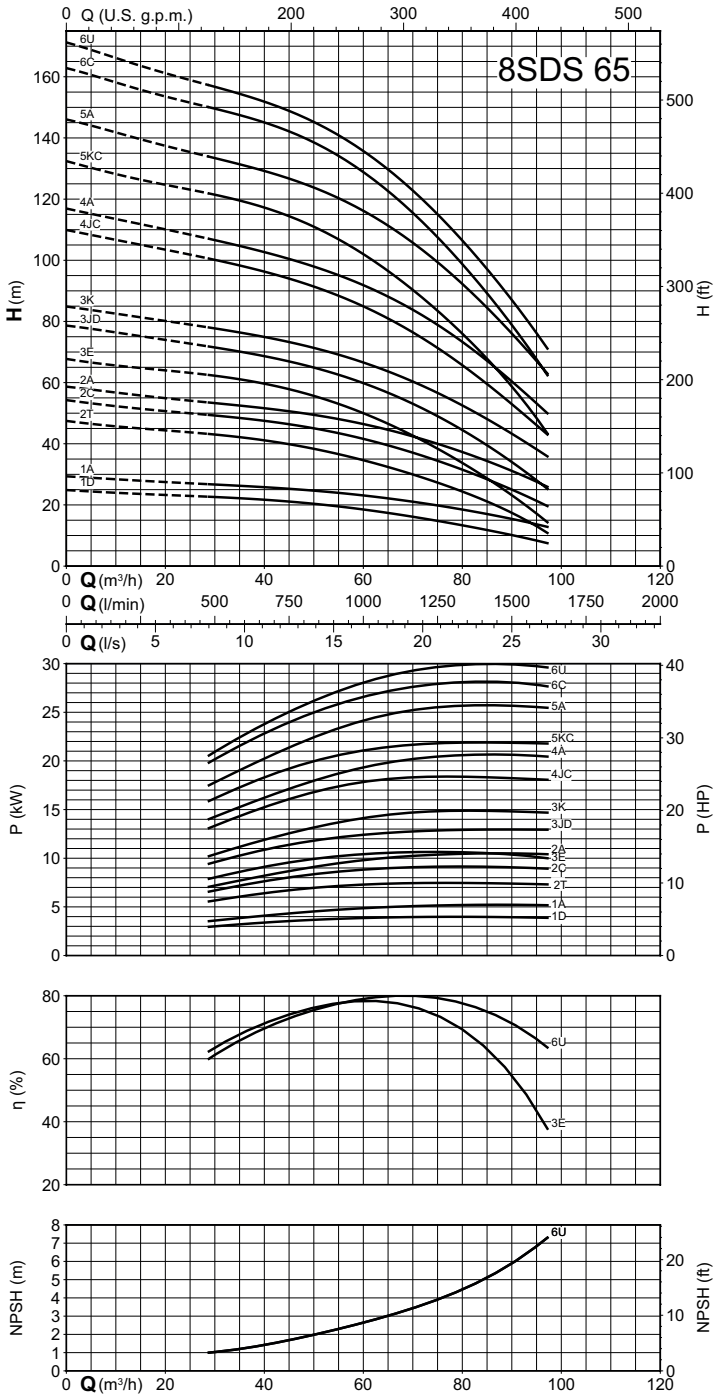

# SDS

calpeda®

## Coverage chart n ≈ 2900 rpm

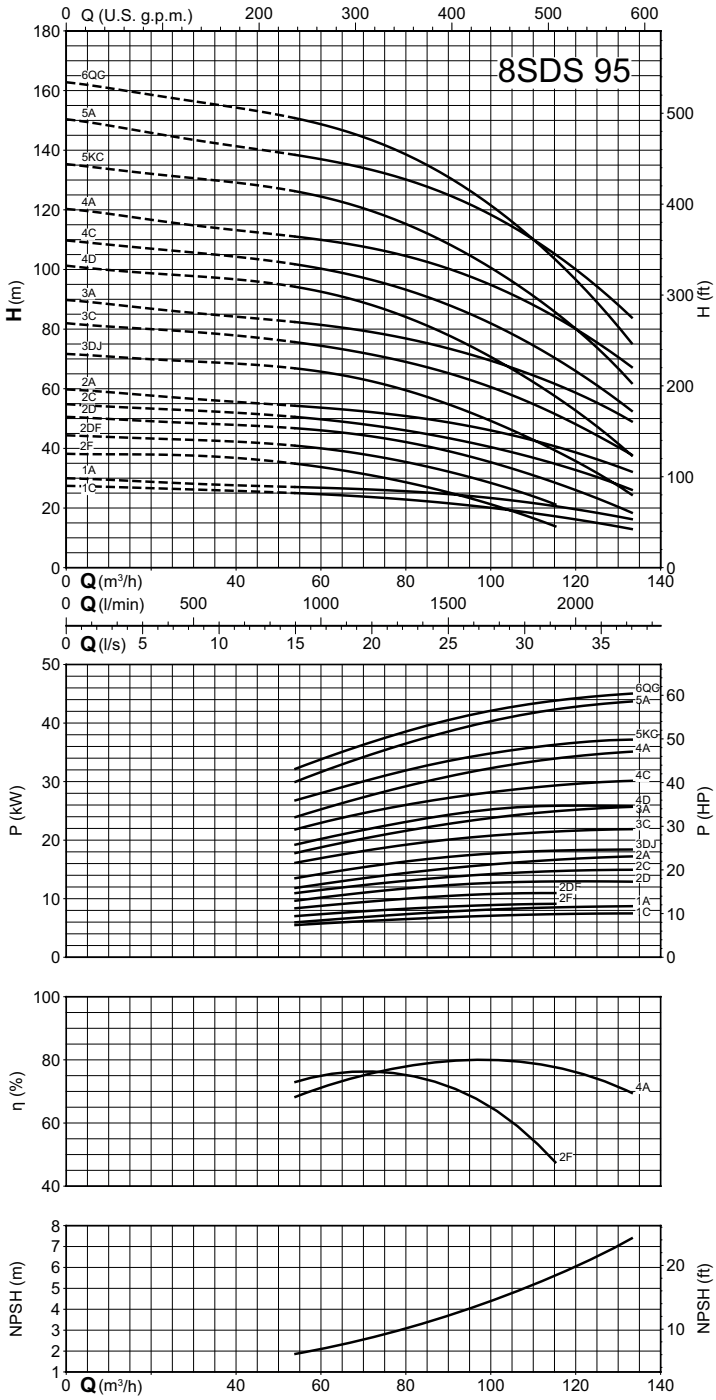


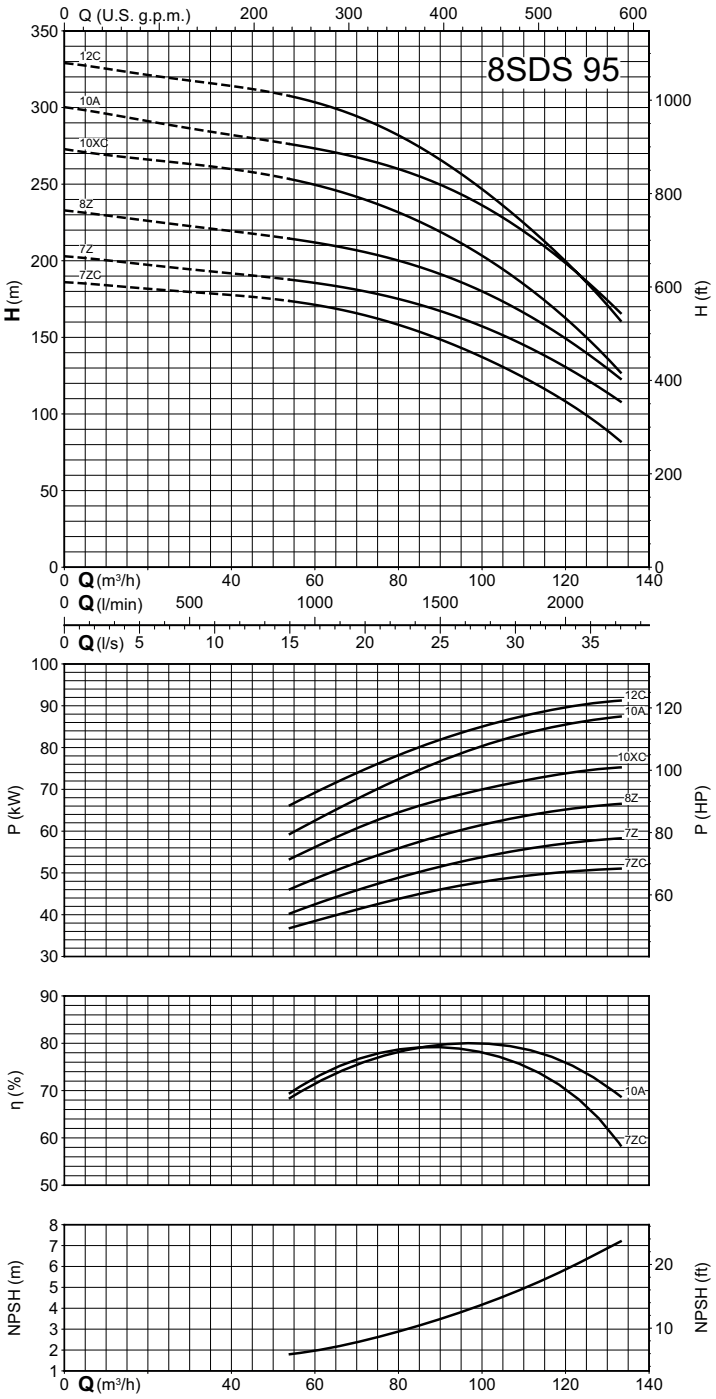

# SDS

calpeda

## Coverage chart n ≈ 2900 rpm

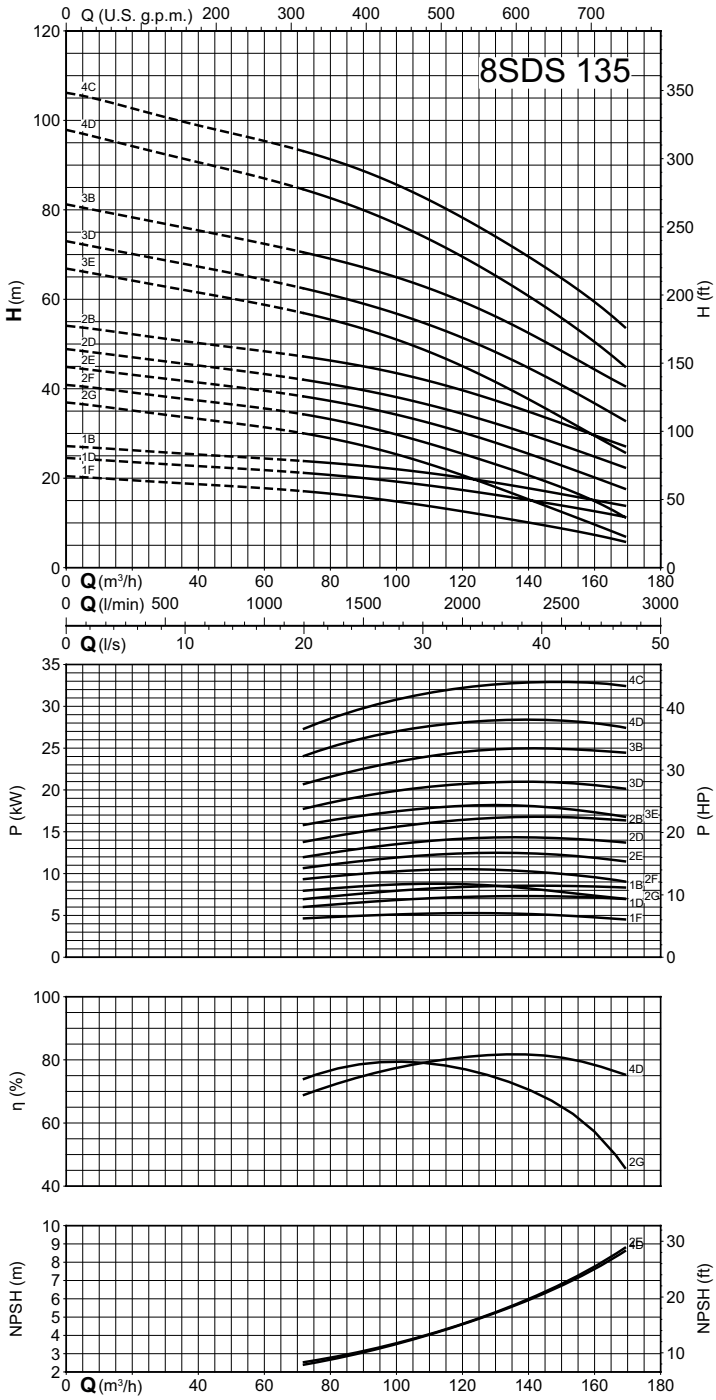


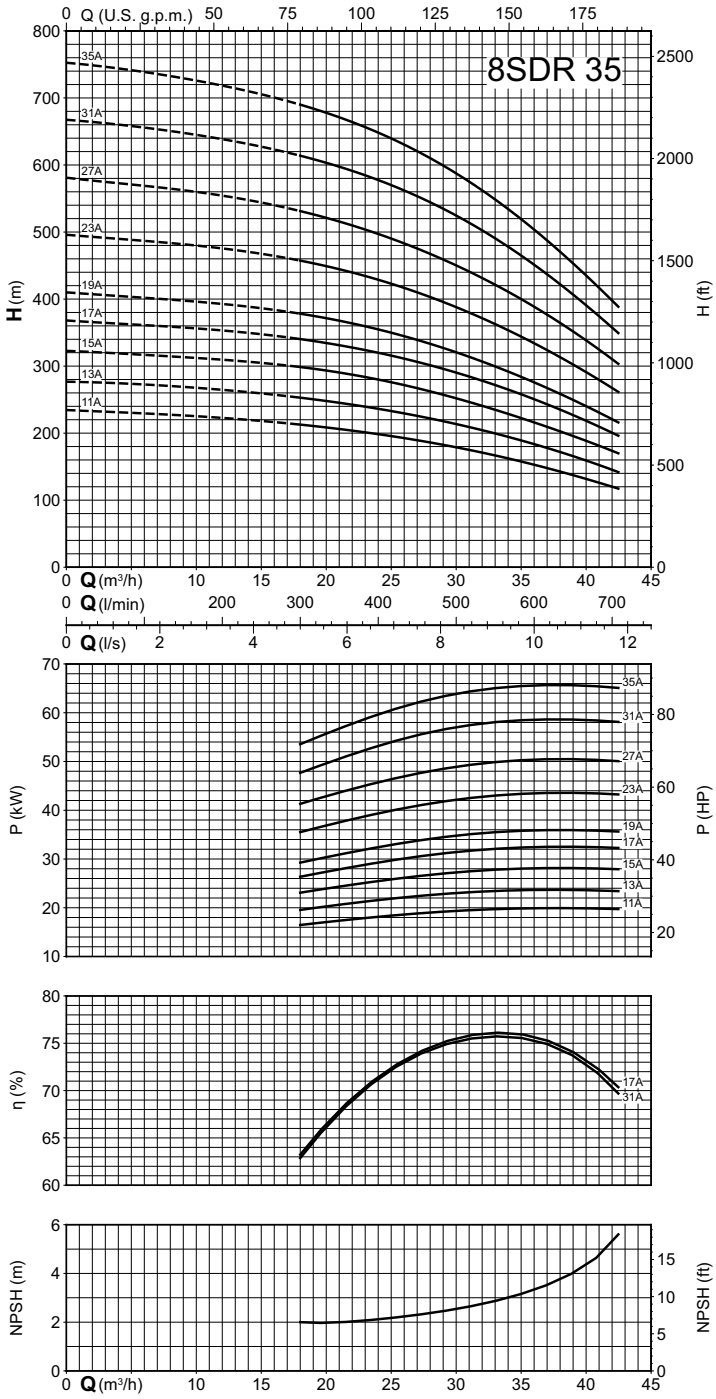

# SDS

calpeda®

## Coverage chart n ≈ 2900 rpm

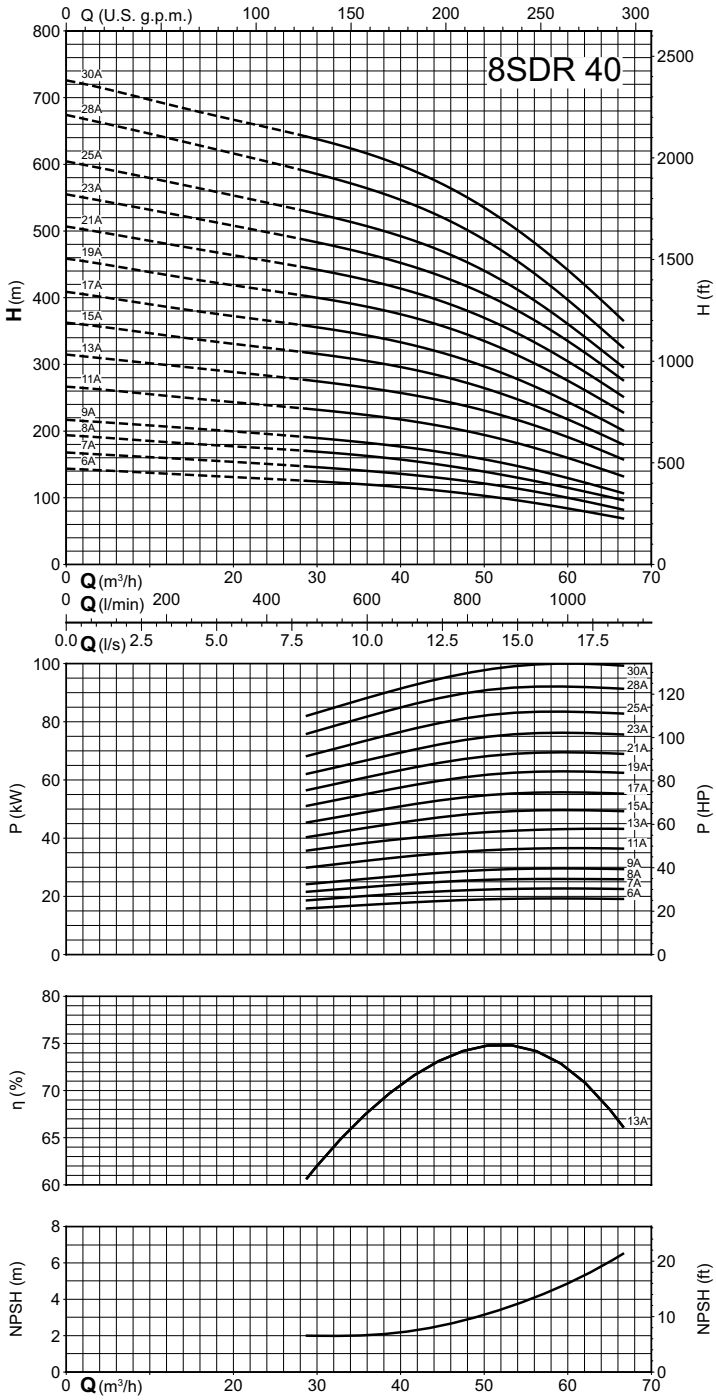


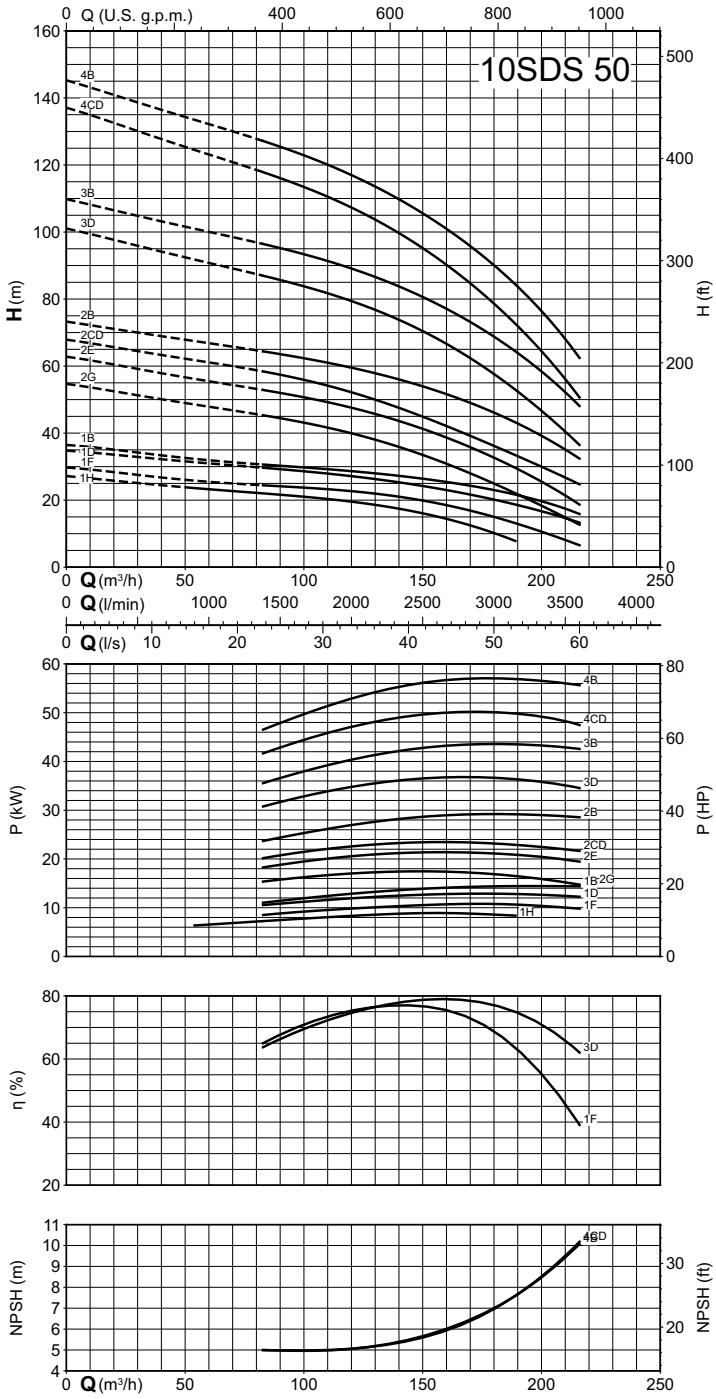

# SDS

## Coverage chart n ≈ 2900 rpm

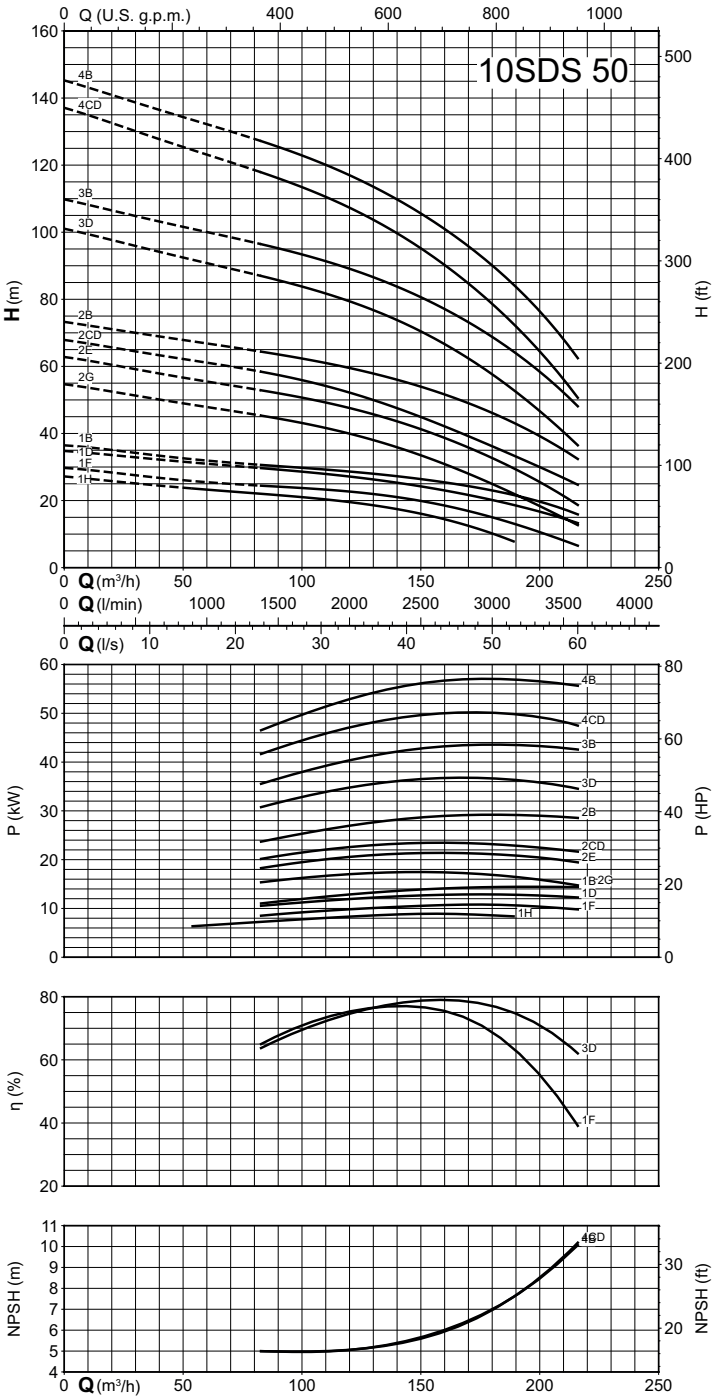


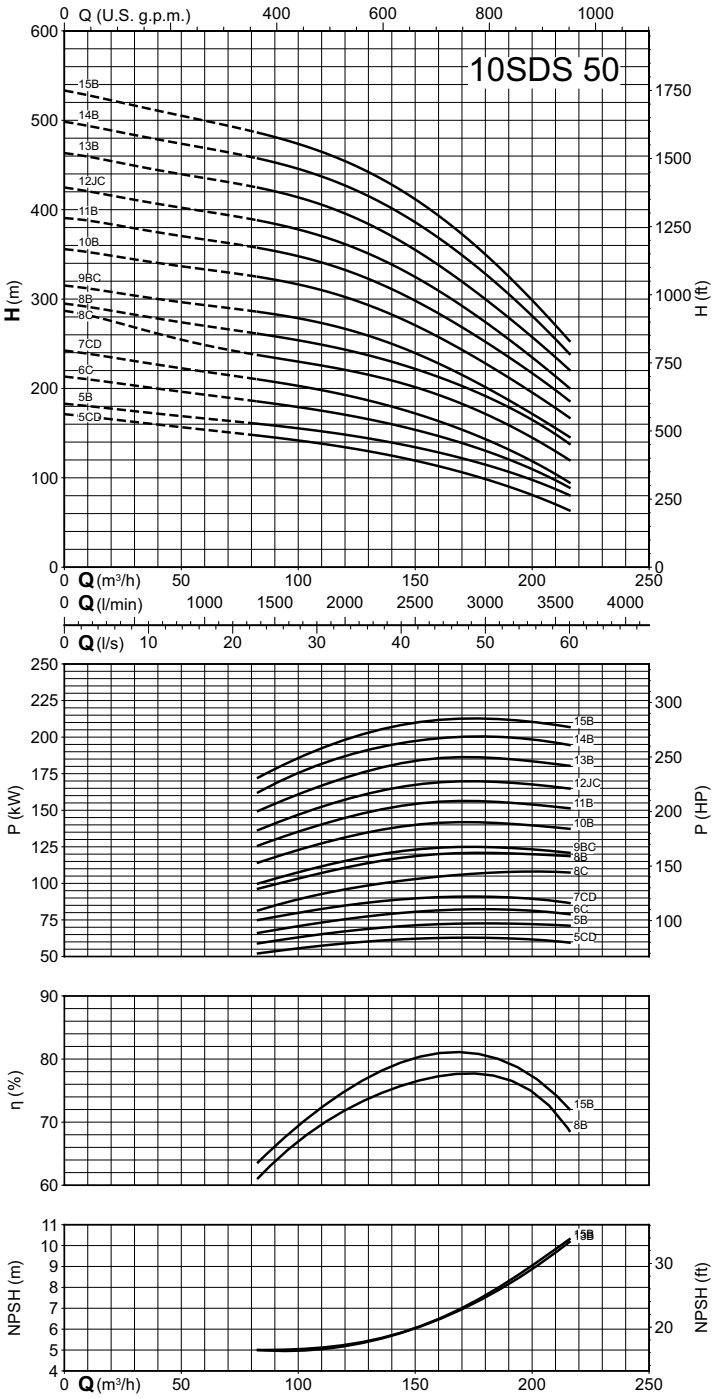

# SDS

calpeda®

## Coverage chart n ≈ 2900 rpm

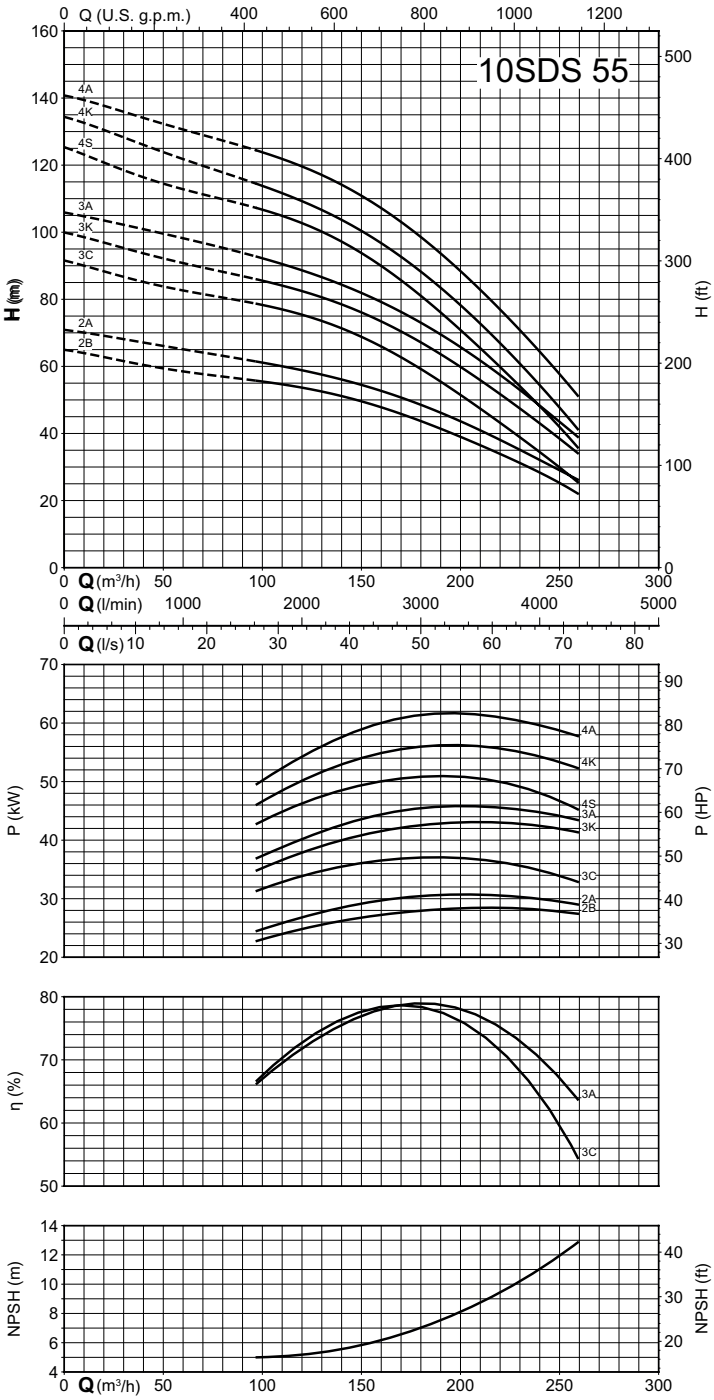


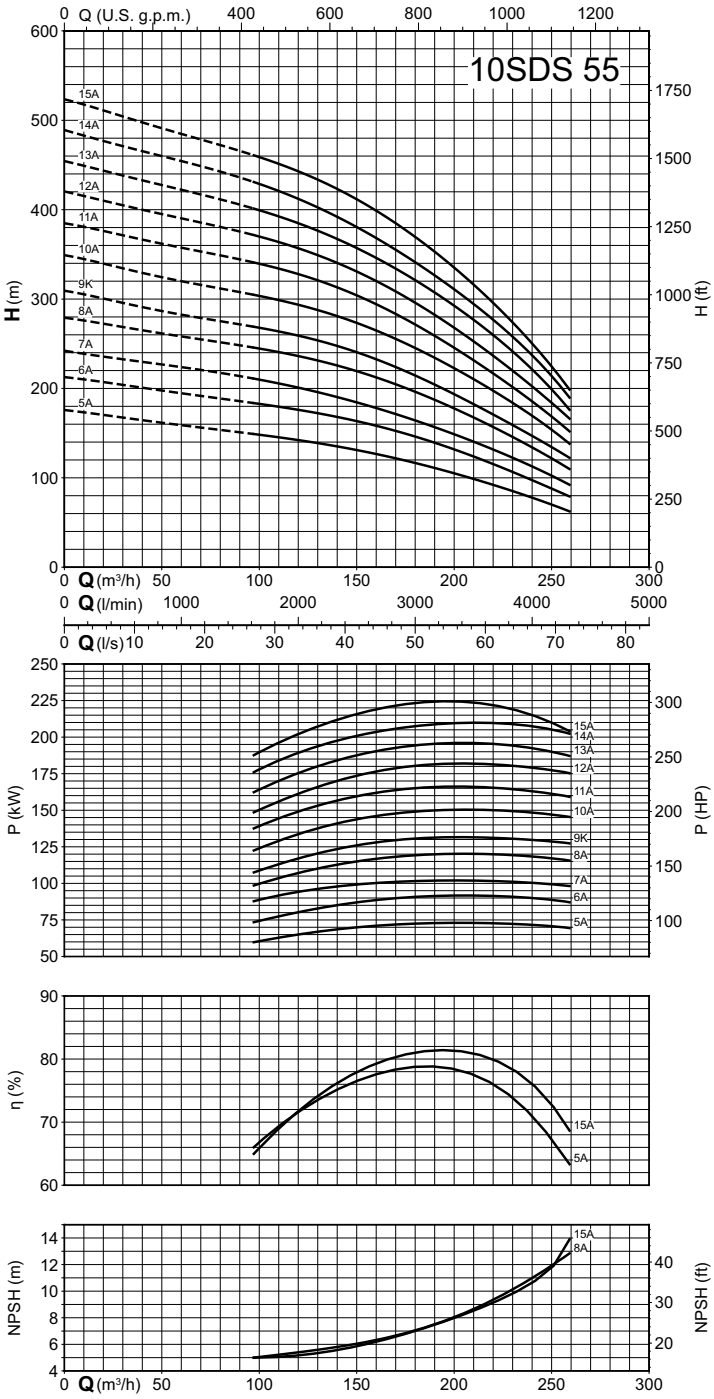

# SDS

## Coverage chart n ≈ 2900 rpm

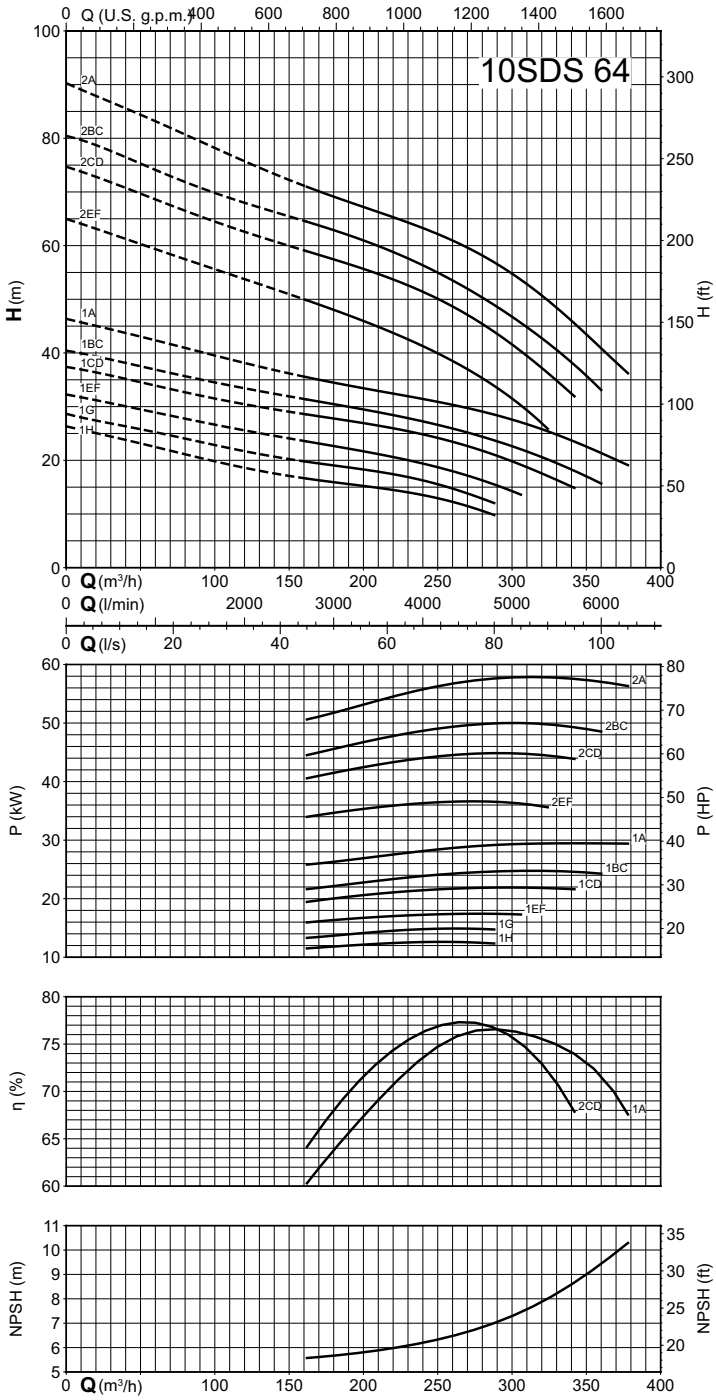


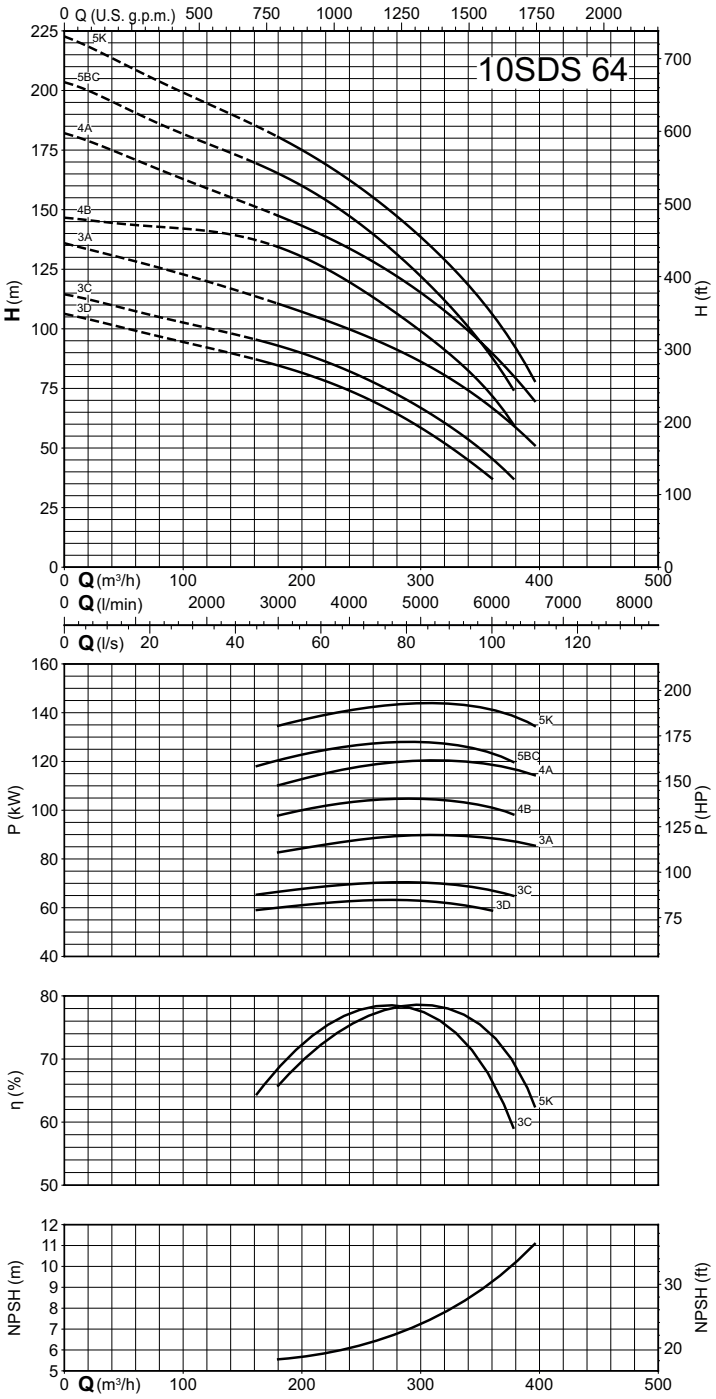

# SDS

calpeda®

## Coverage chart n ≈ 2900 rpm

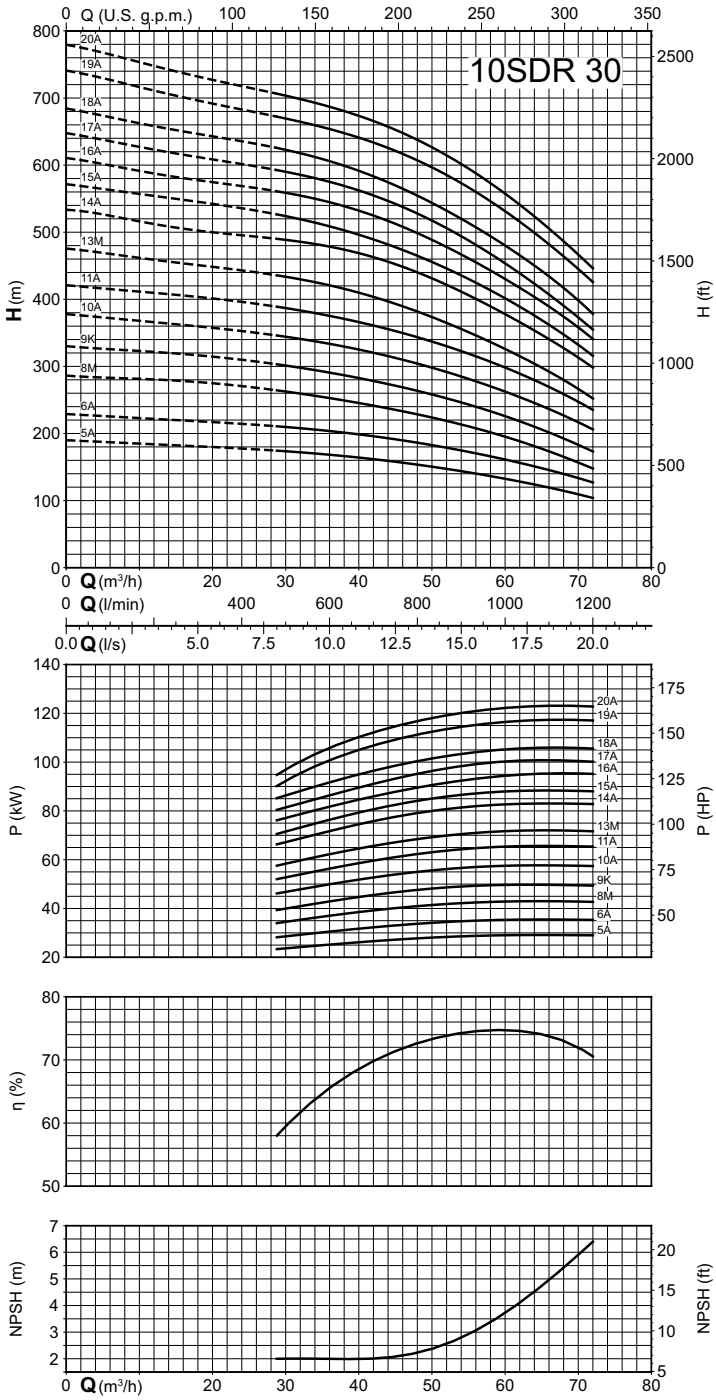


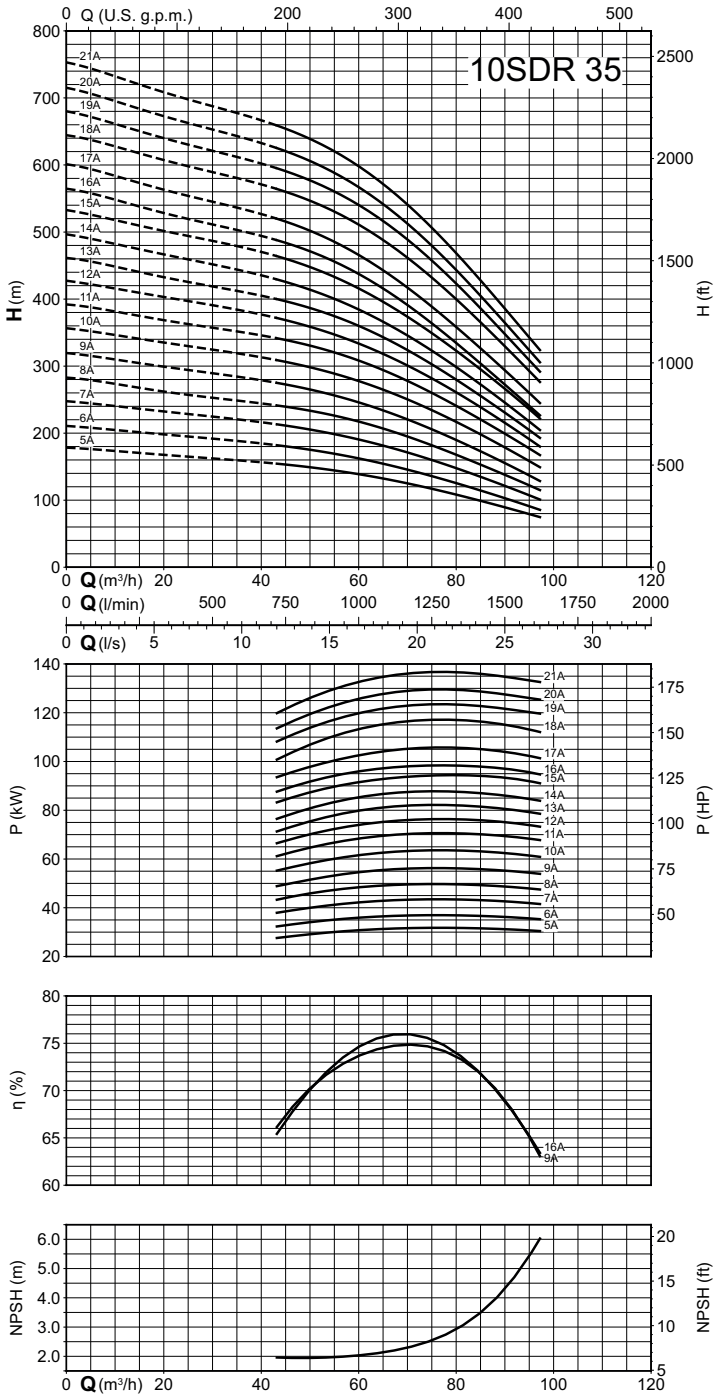

# SDS

## Coverage chart n ≈ 2900 rpm

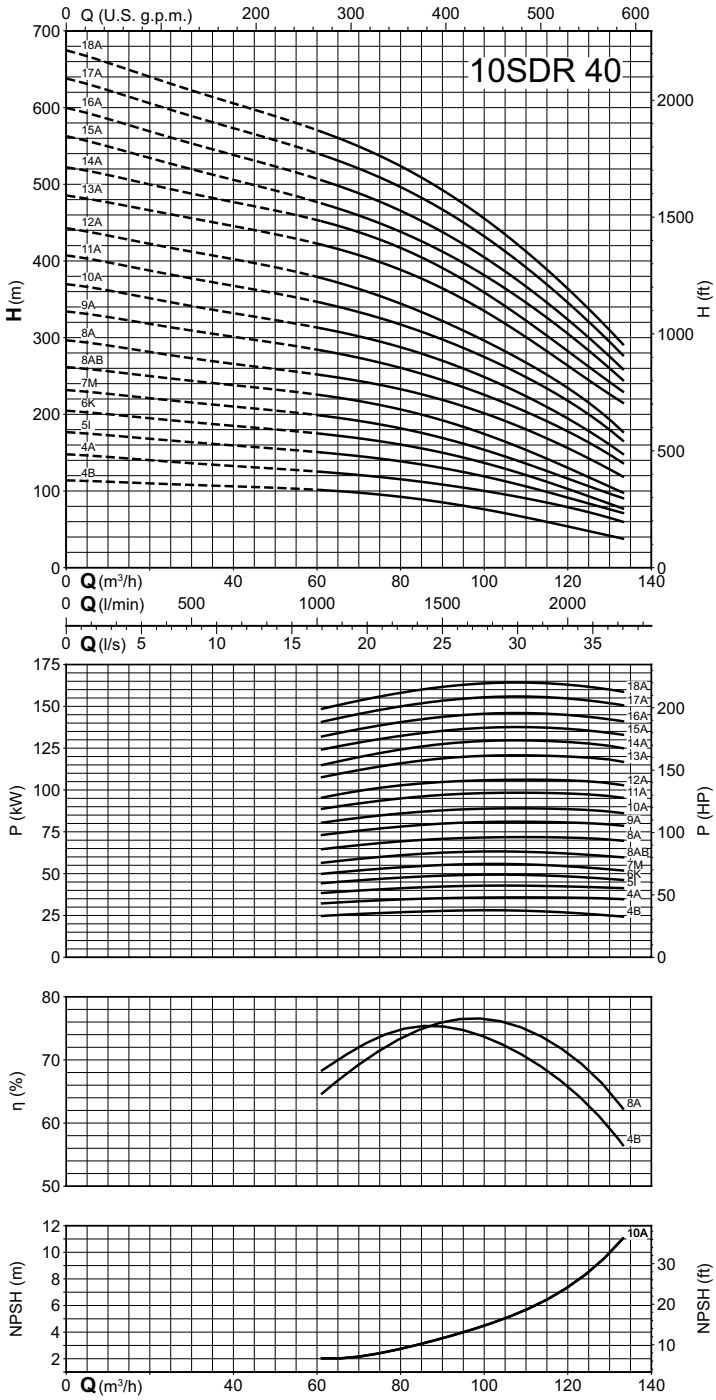


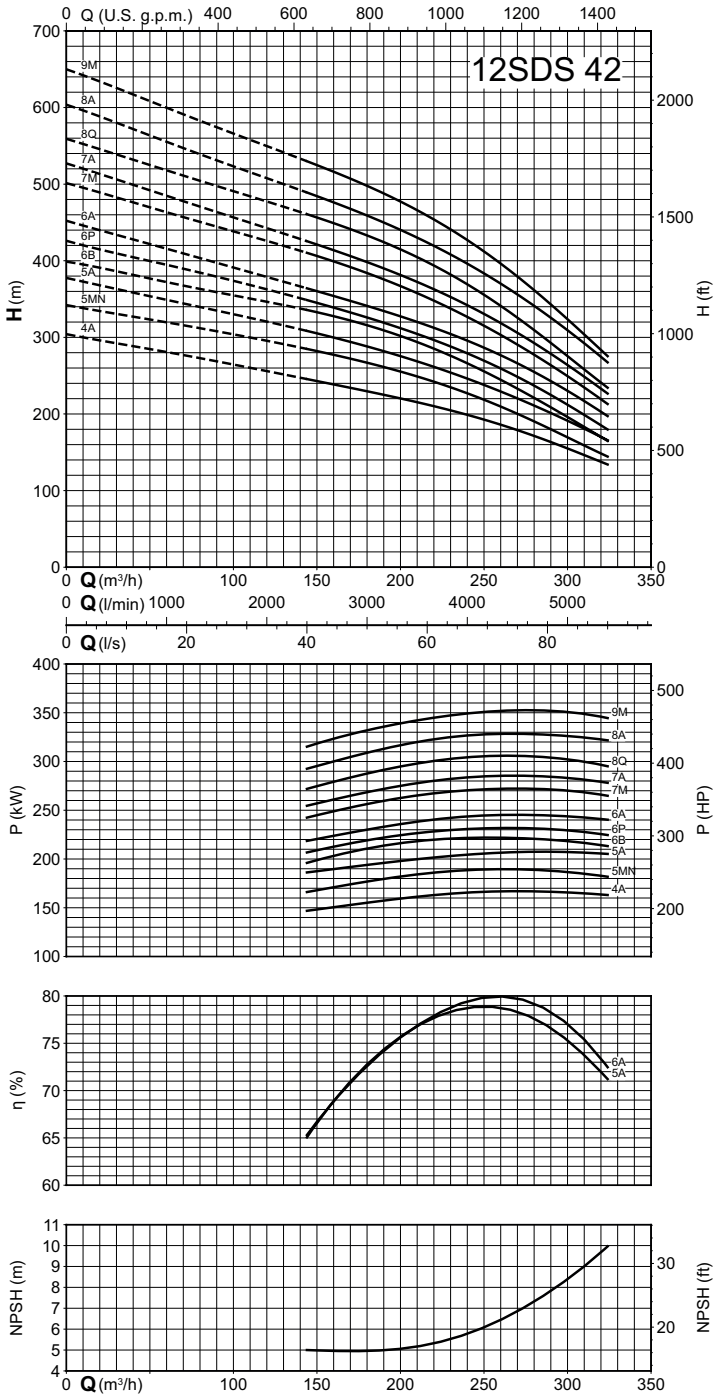

# SDS

## Coverage chart n ≈ 2900 rpm

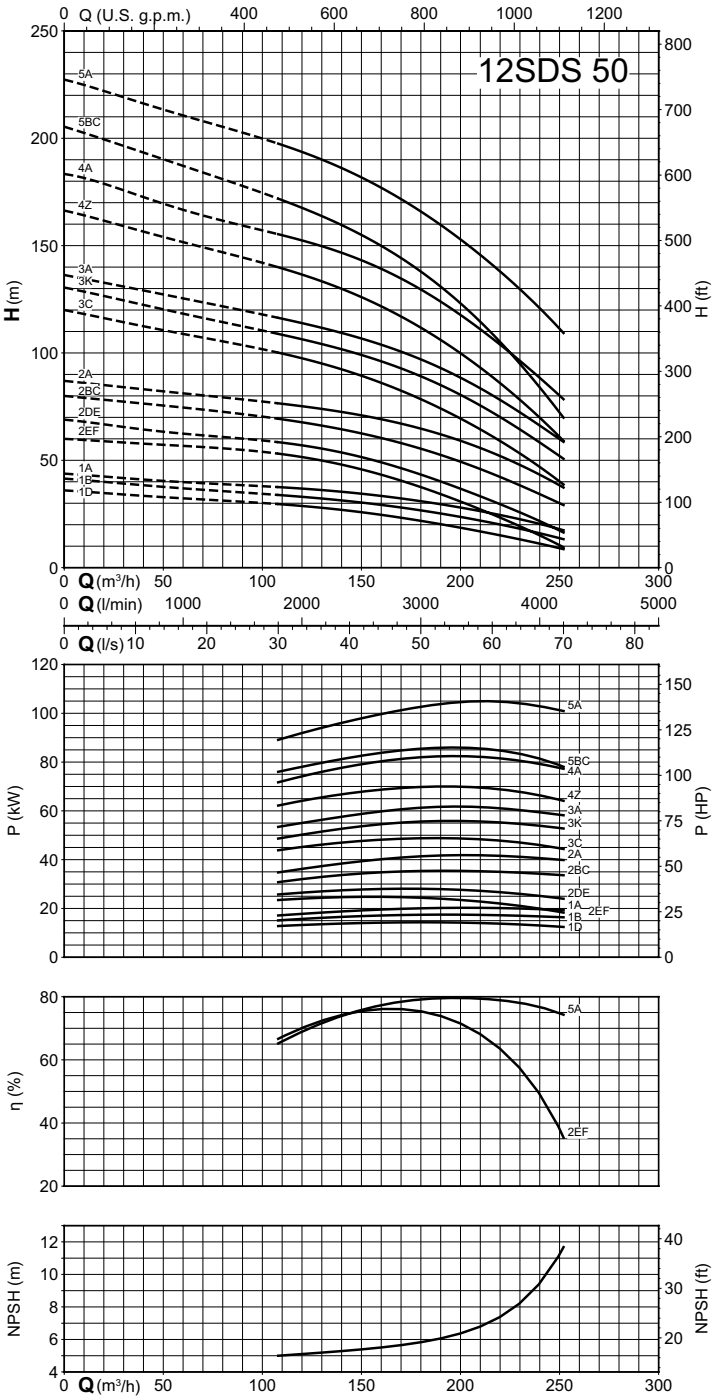


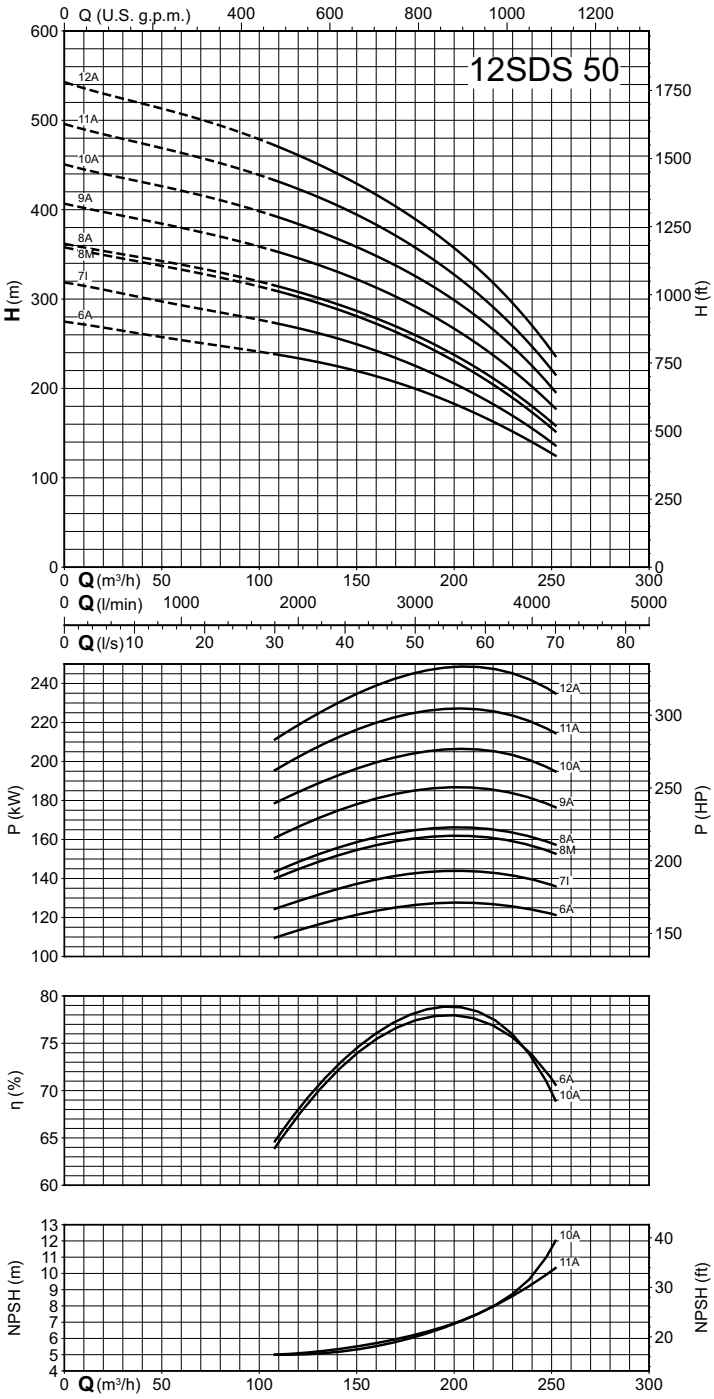

# SDS

## Coverage chart n ≈ 2900 rpm

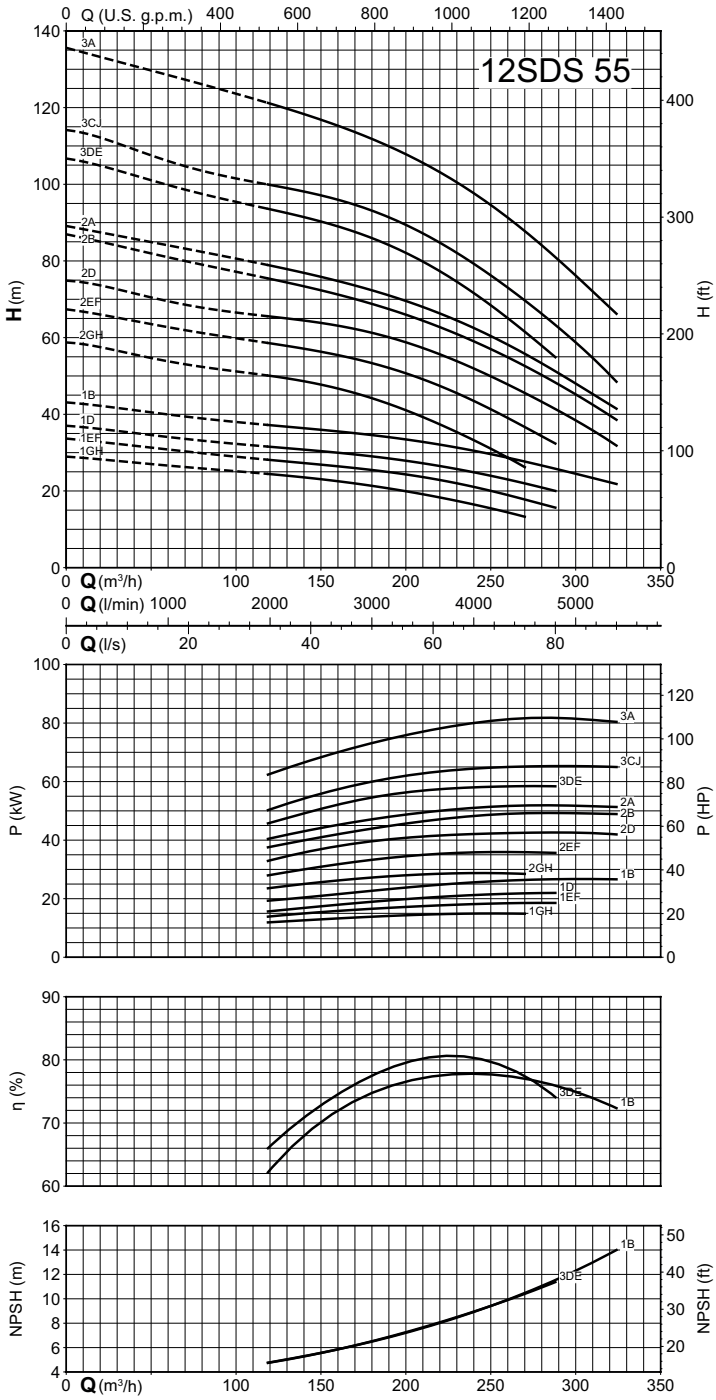


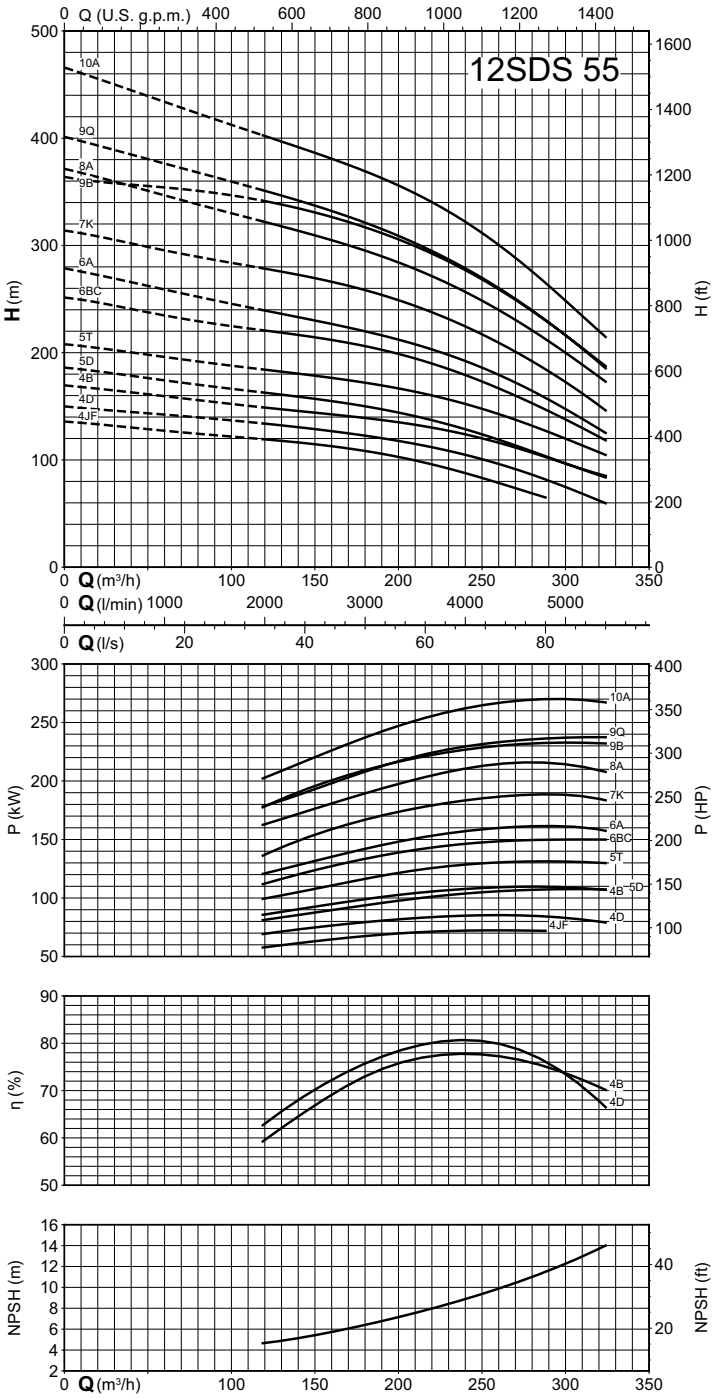

# SDS

## Coverage chart n ≈ 2900 rpm

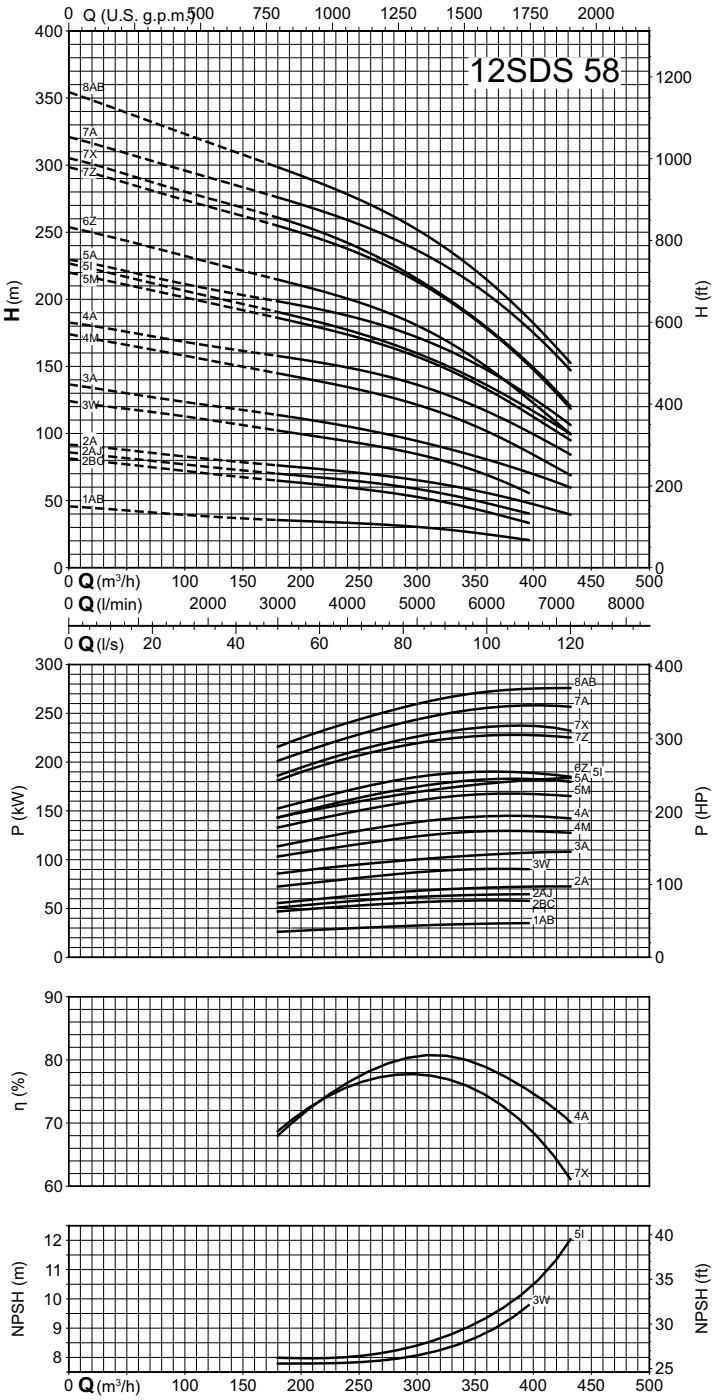


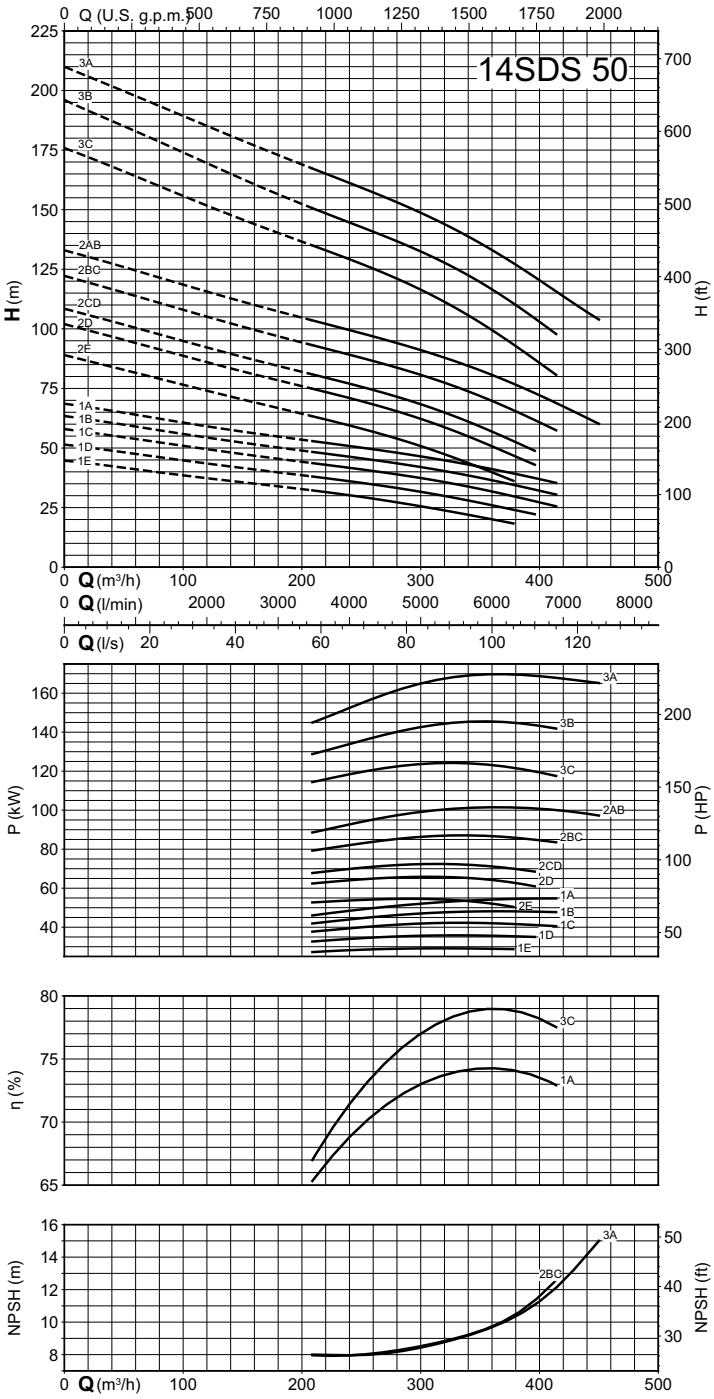

# SDS

## Coverage chart n ≈ 2900 rpm

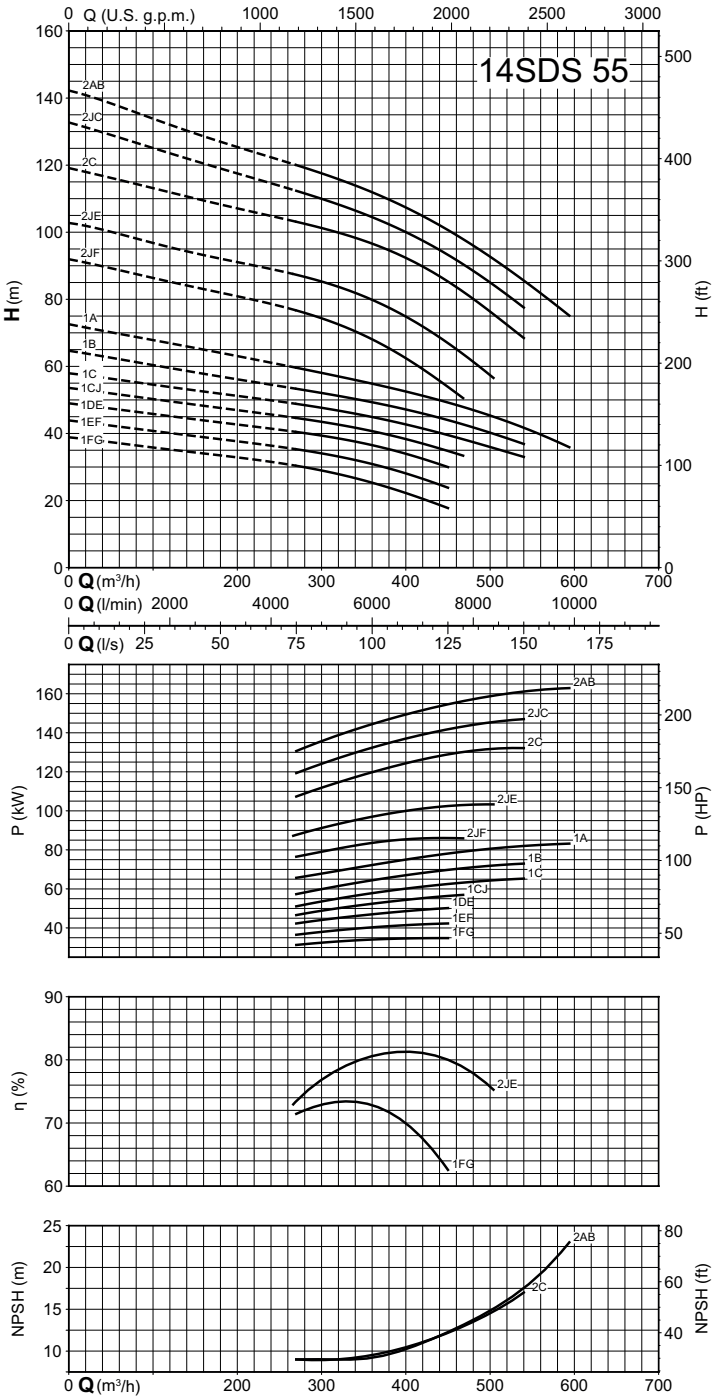


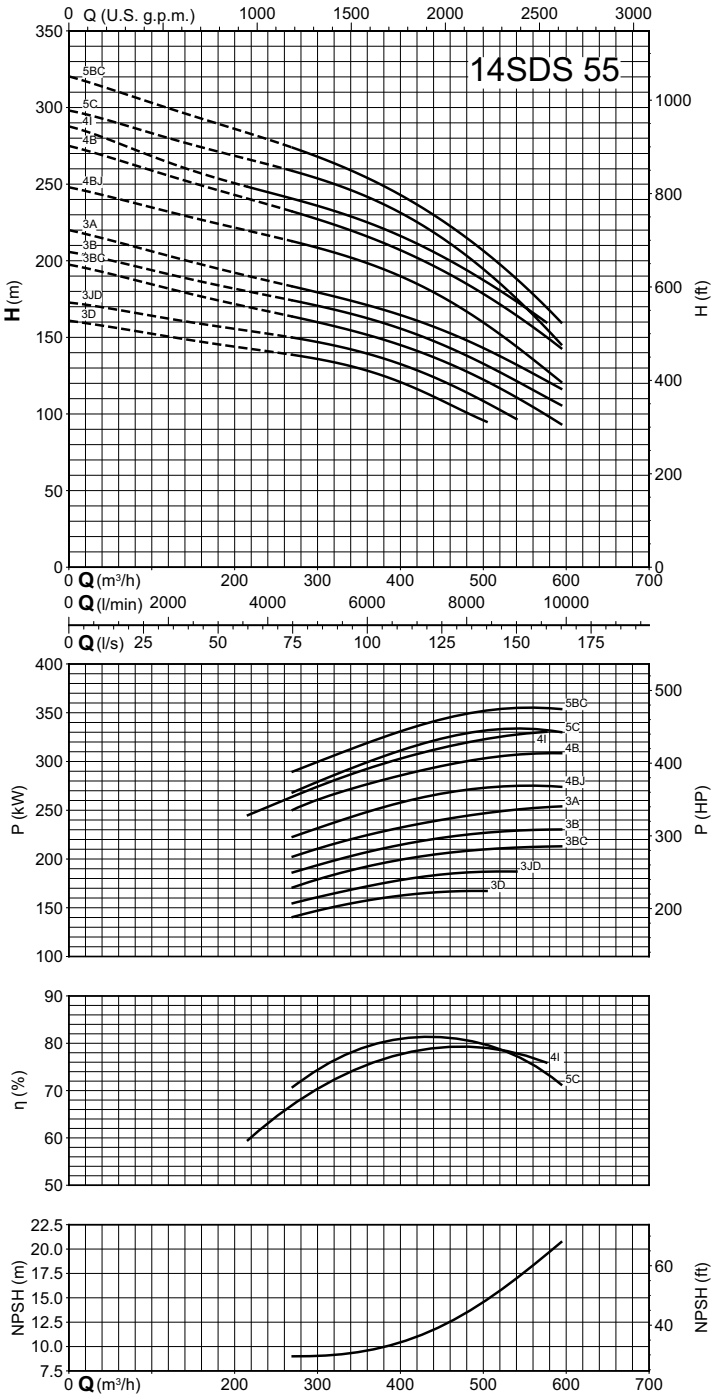

# SDS

## Coverage chart n ≈ 2900 rpm

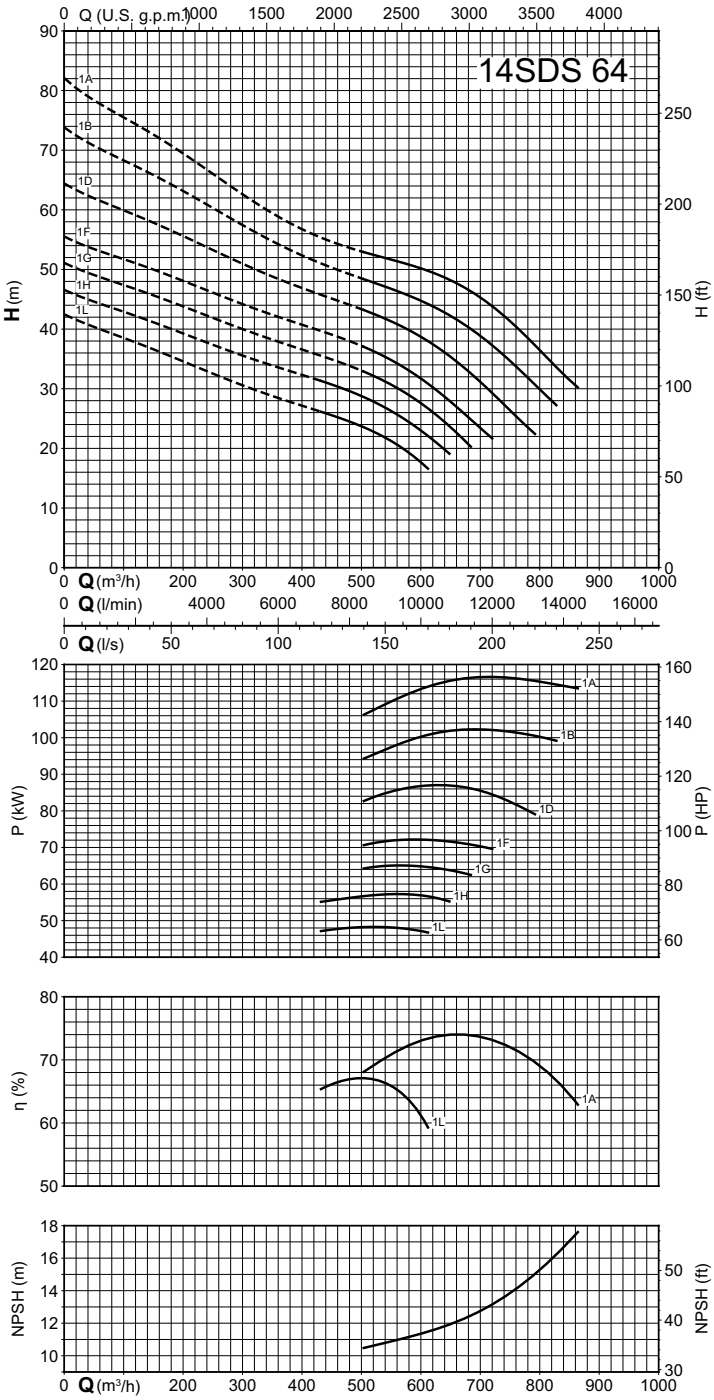


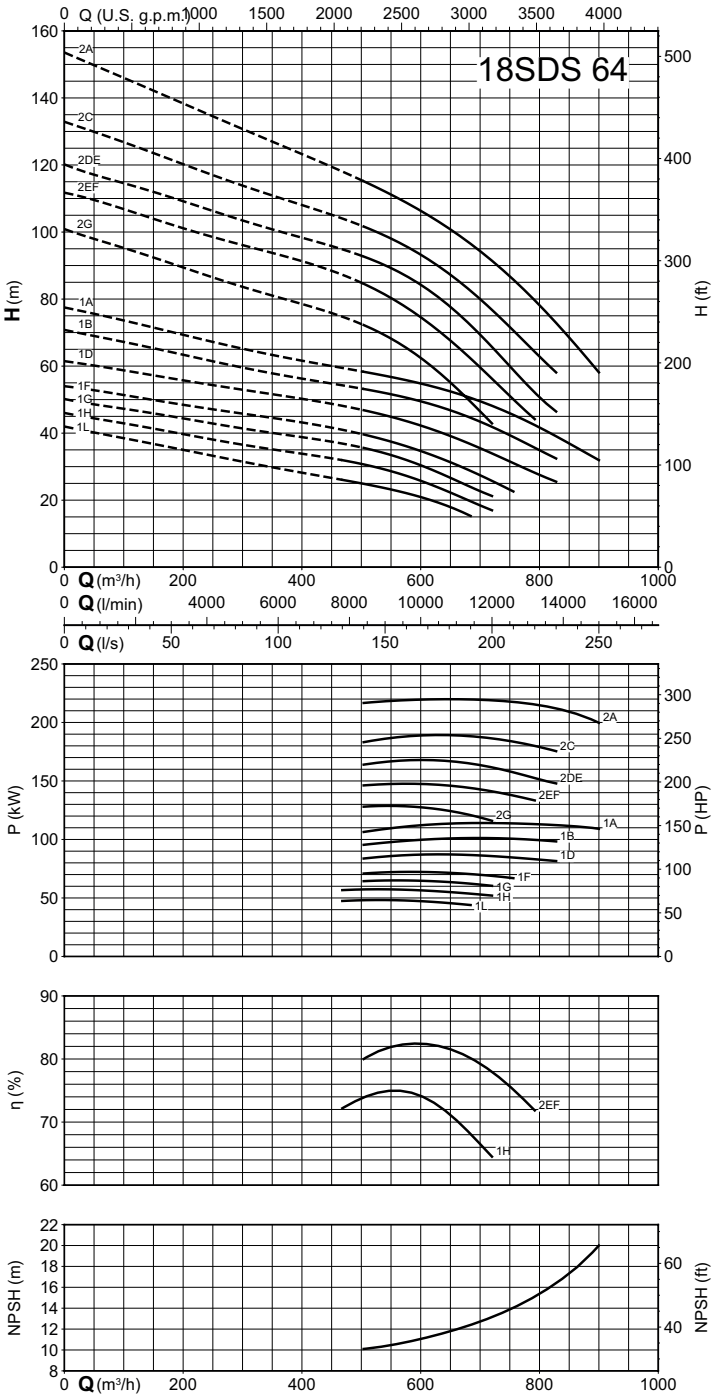

# SDS

## Coverage chart n ≈ 2900 rpm

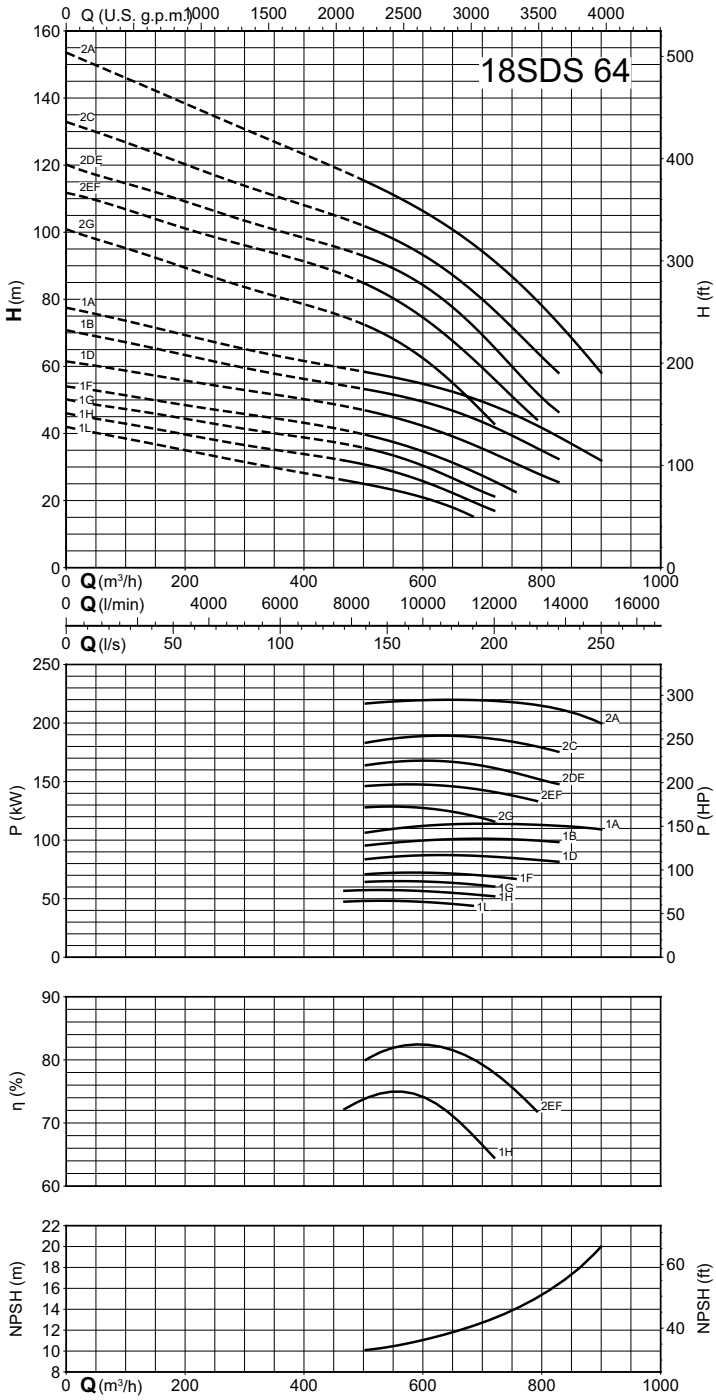


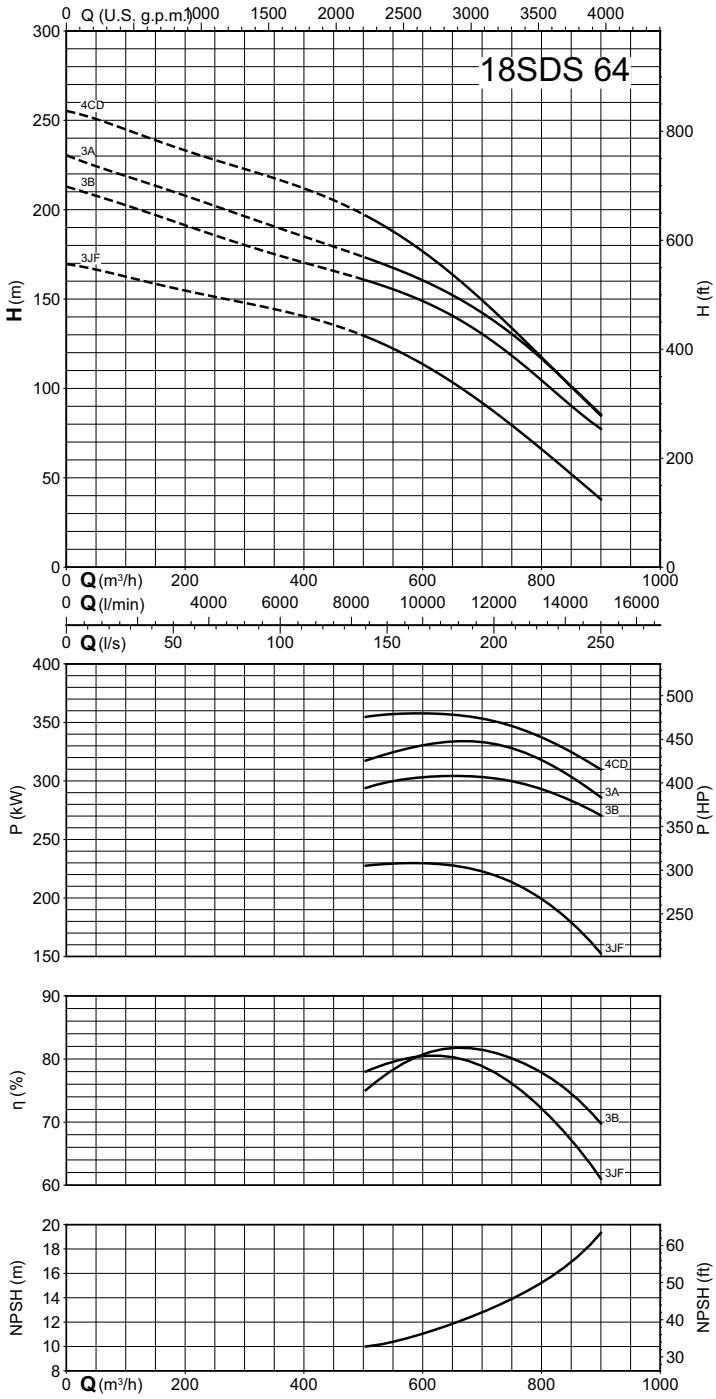

# SDS

calpeda®

## Coverage chart n ≈ 2900 rpm

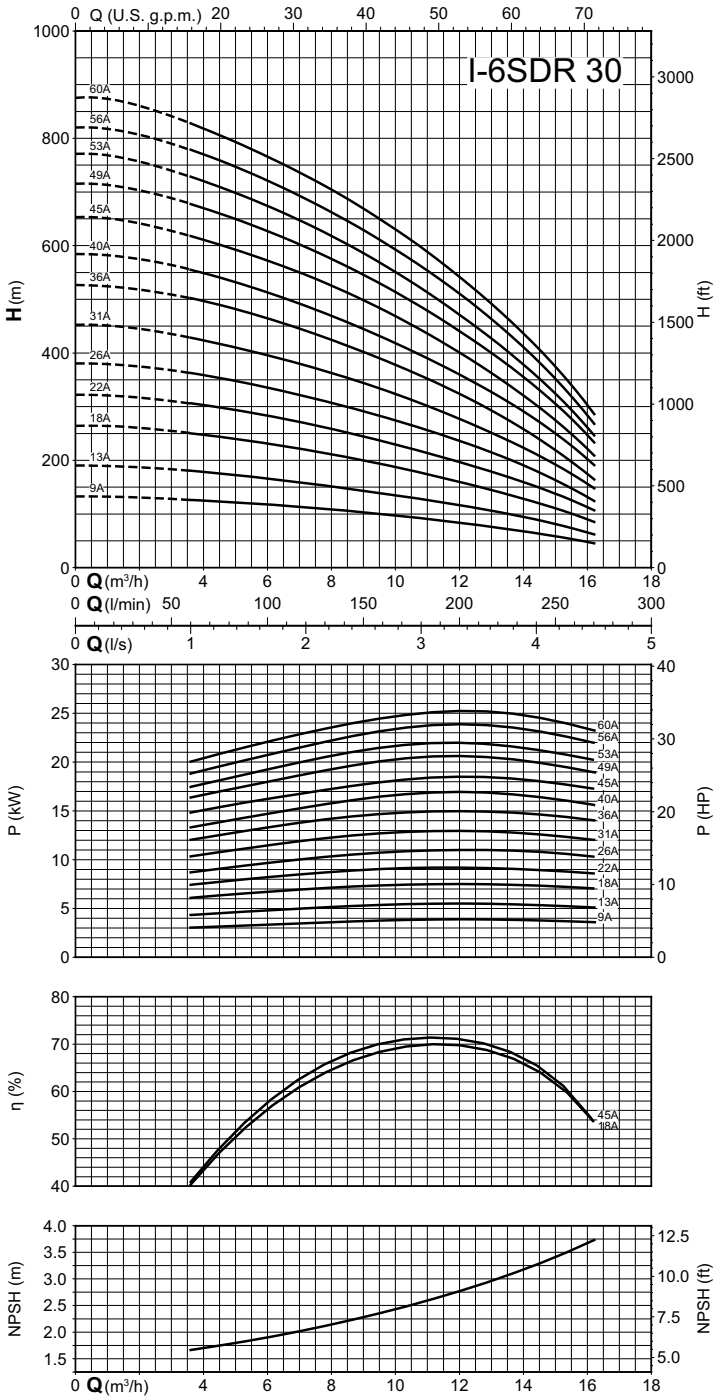


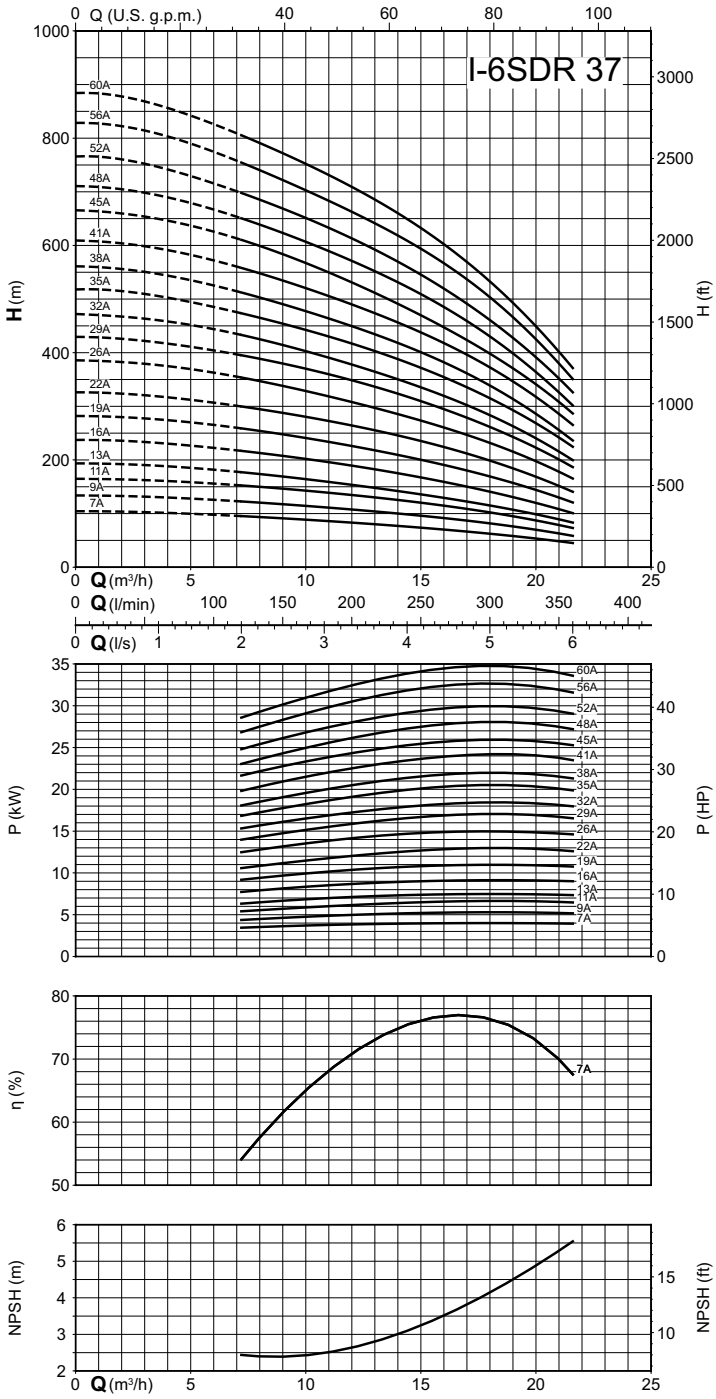

# SDS

## Coverage chart n ≈ 2900 rpm

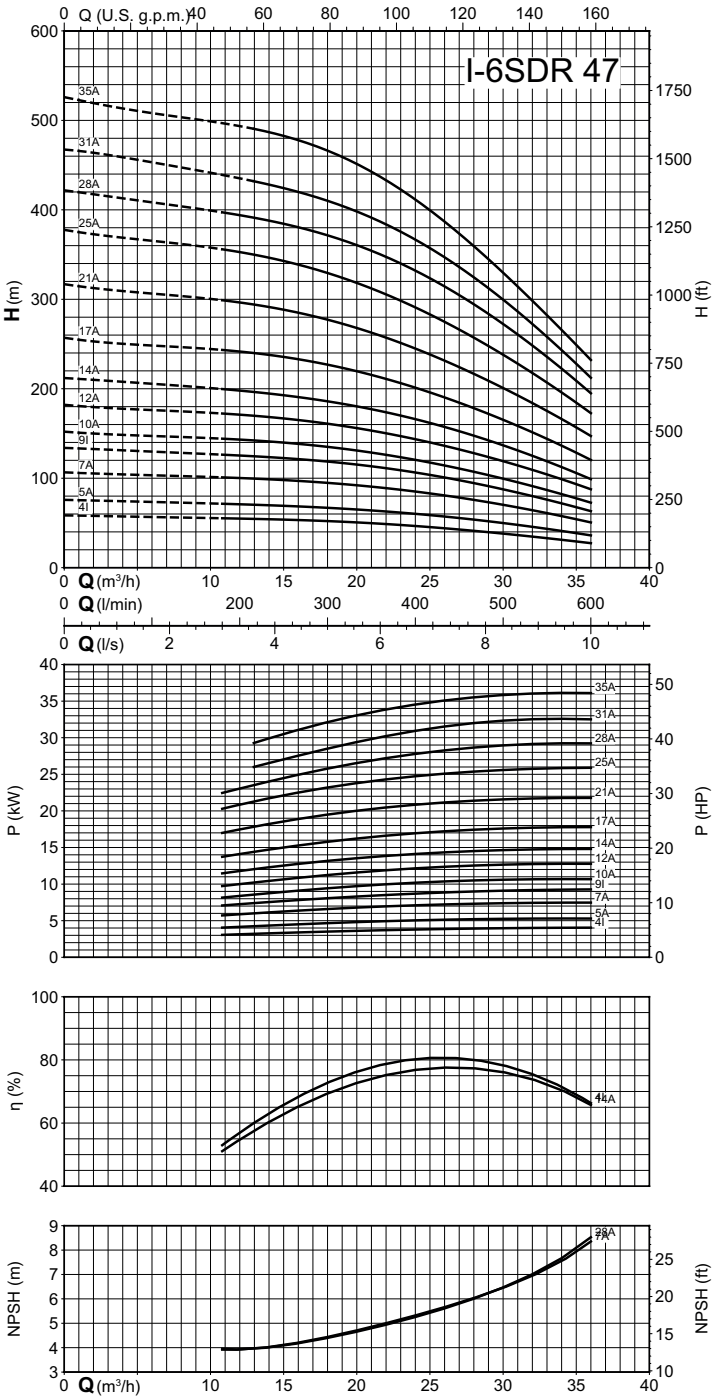


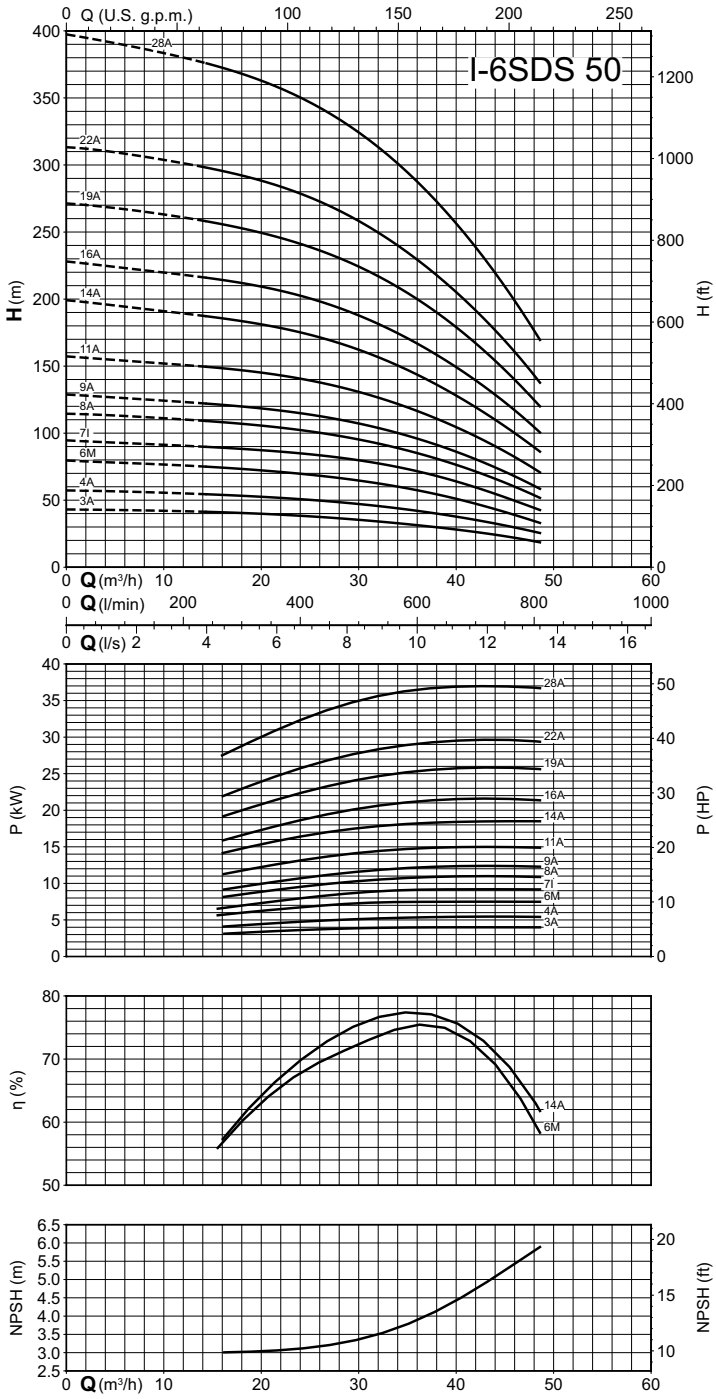

# SDS

## Coverage chart n ≈ 2900 rpm

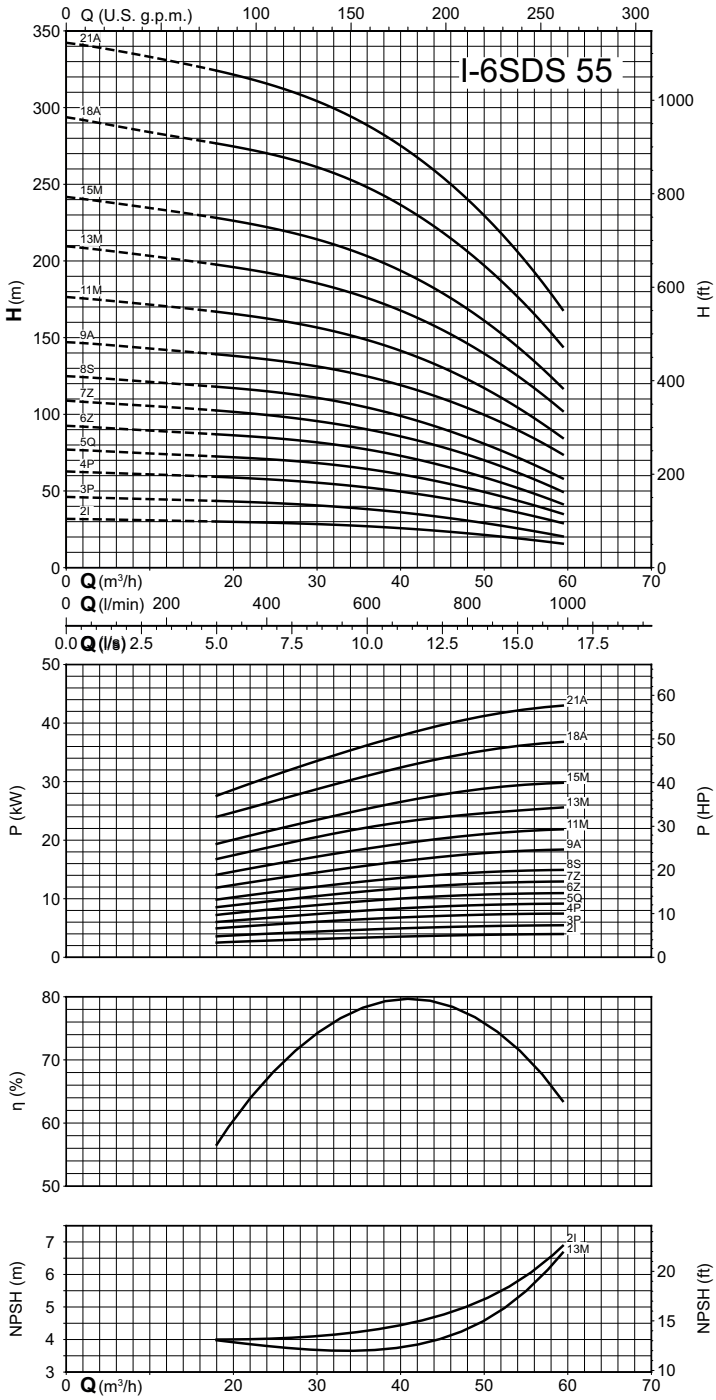


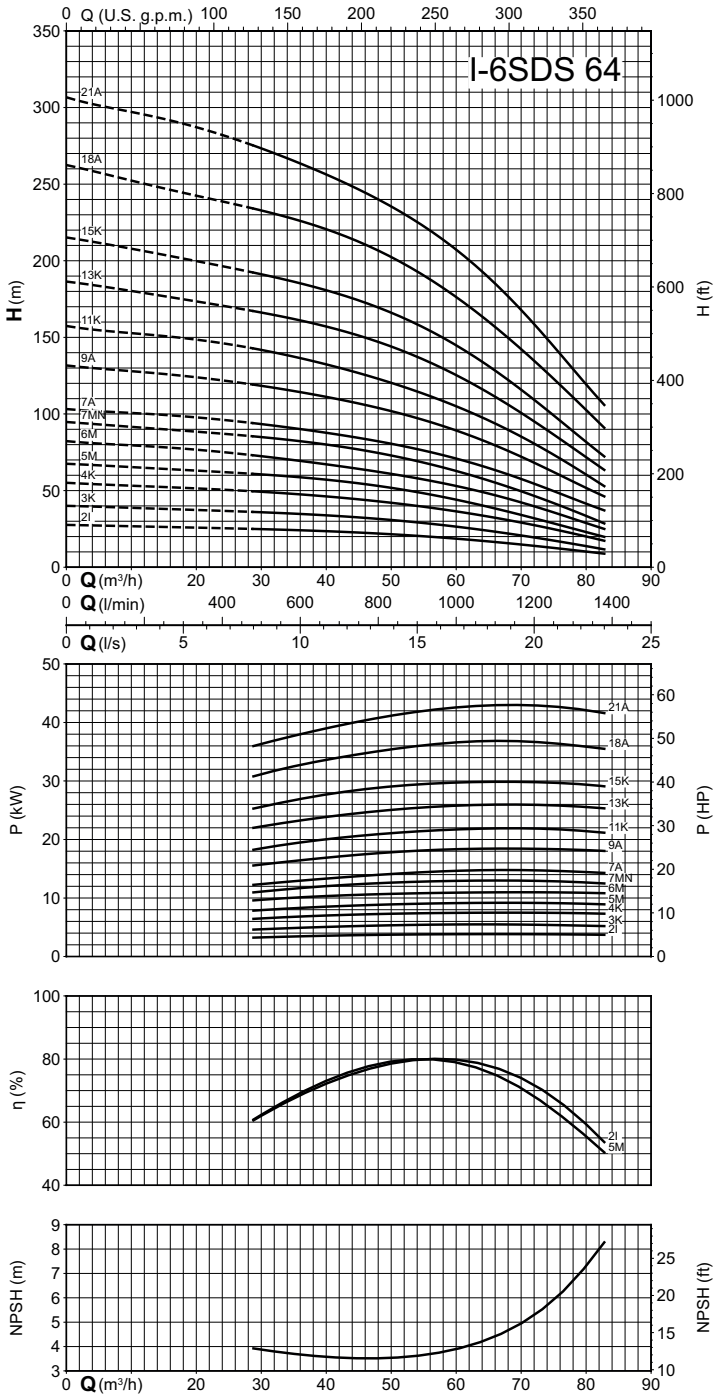

# SDS

## Coverage chart n ≈ 2900 rpm

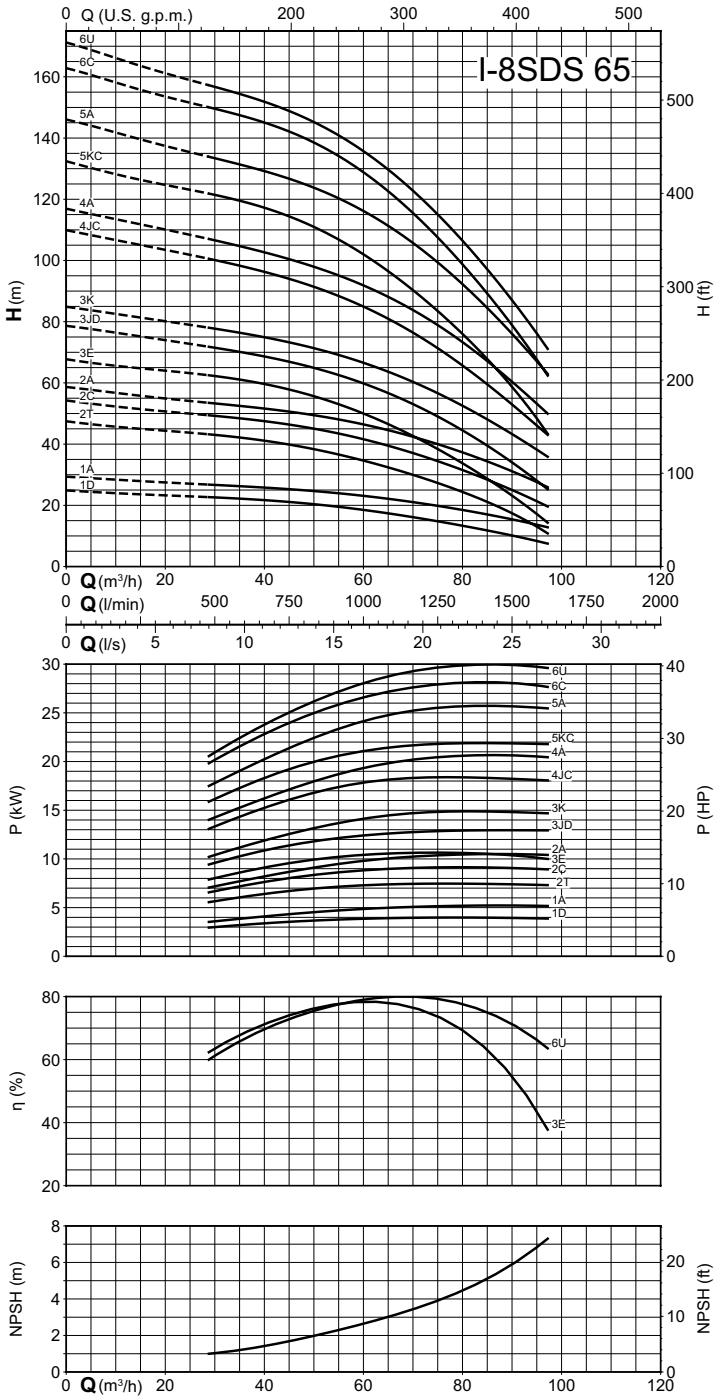


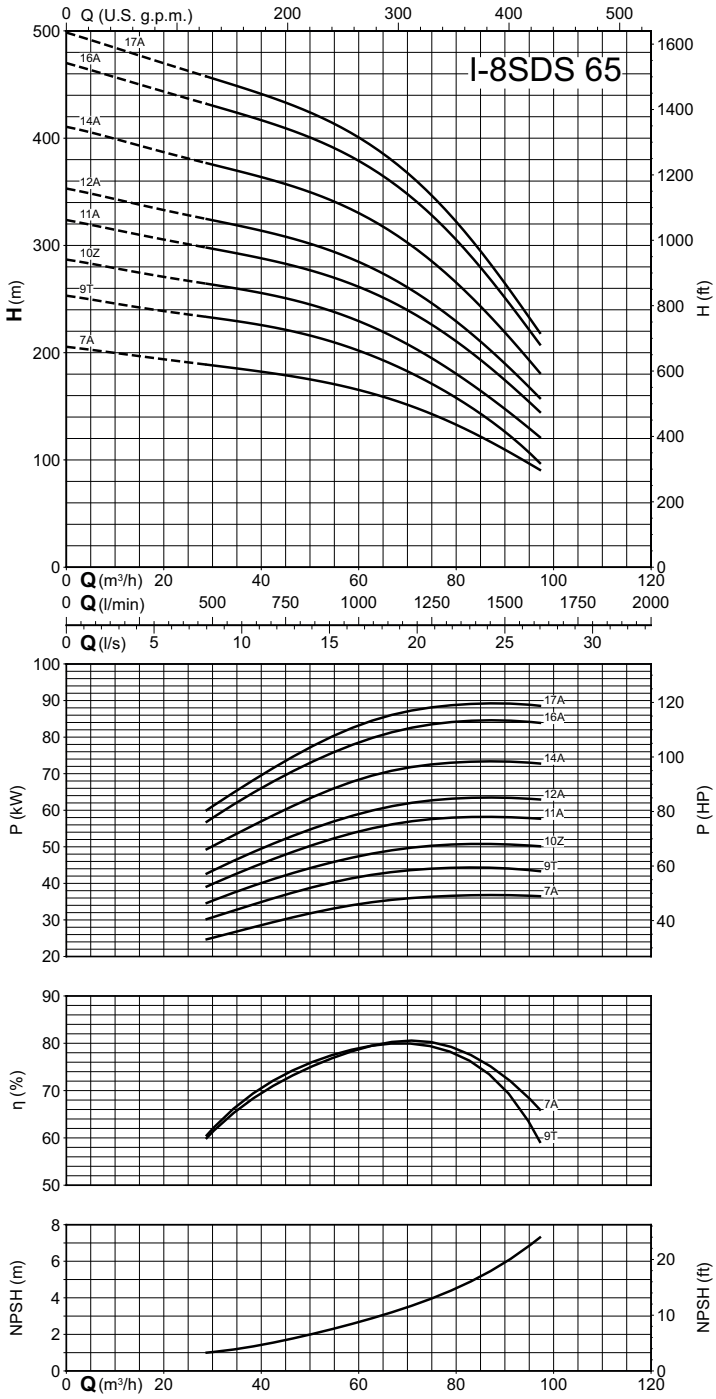

# SDS

## Coverage chart n ≈ 2900 rpm

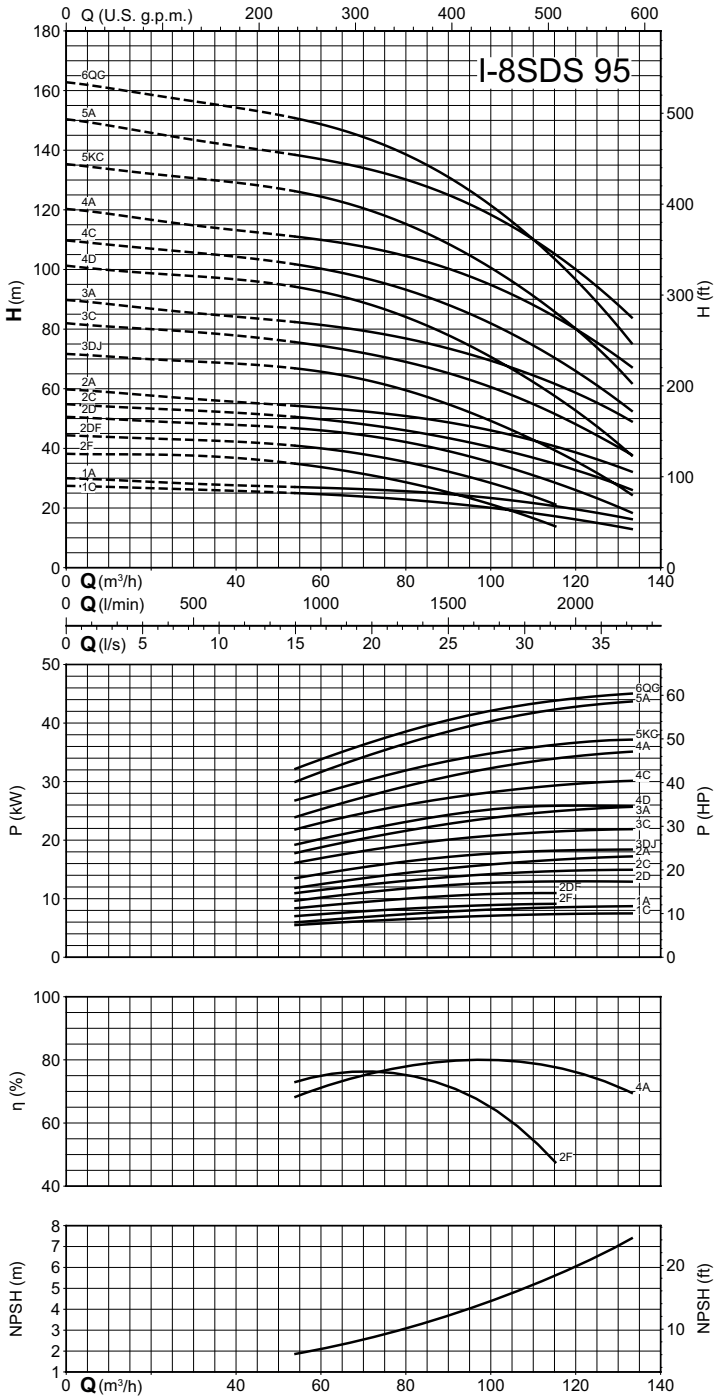


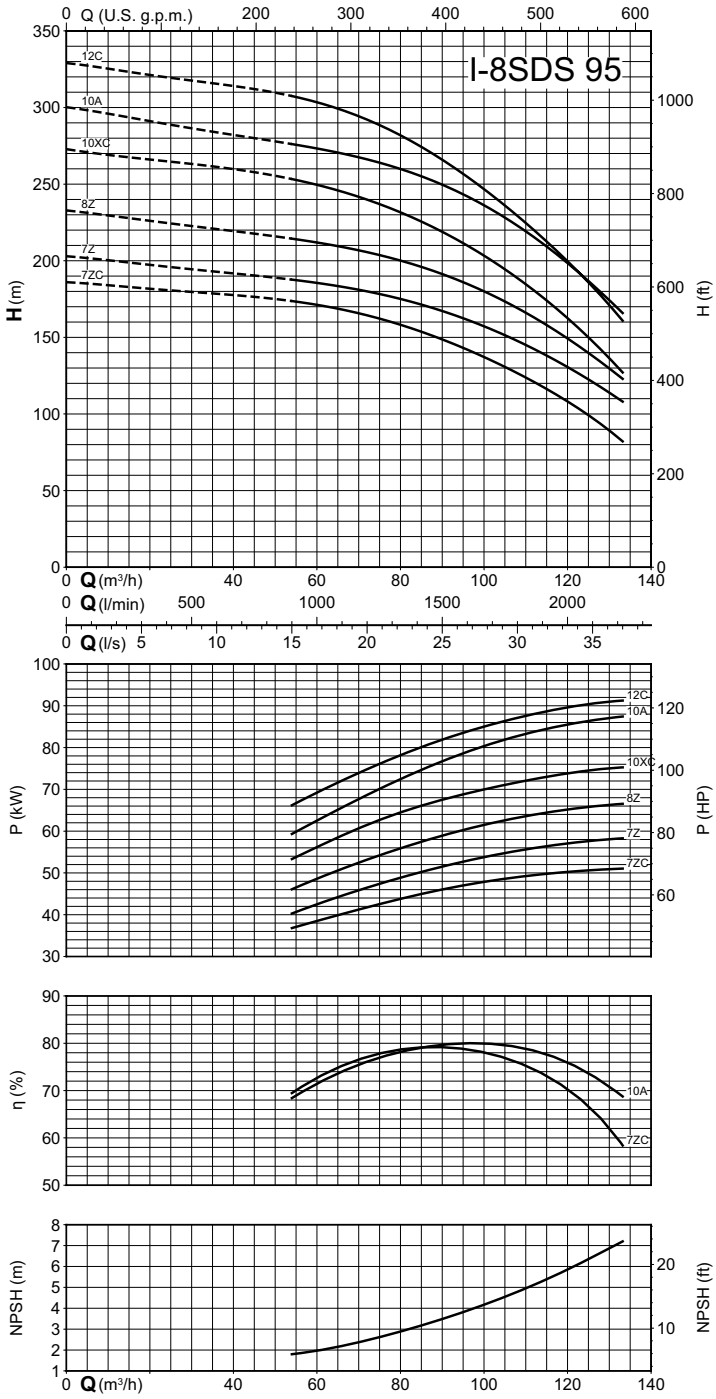

# SDS

## Coverage chart n ≈ 2900 rpm

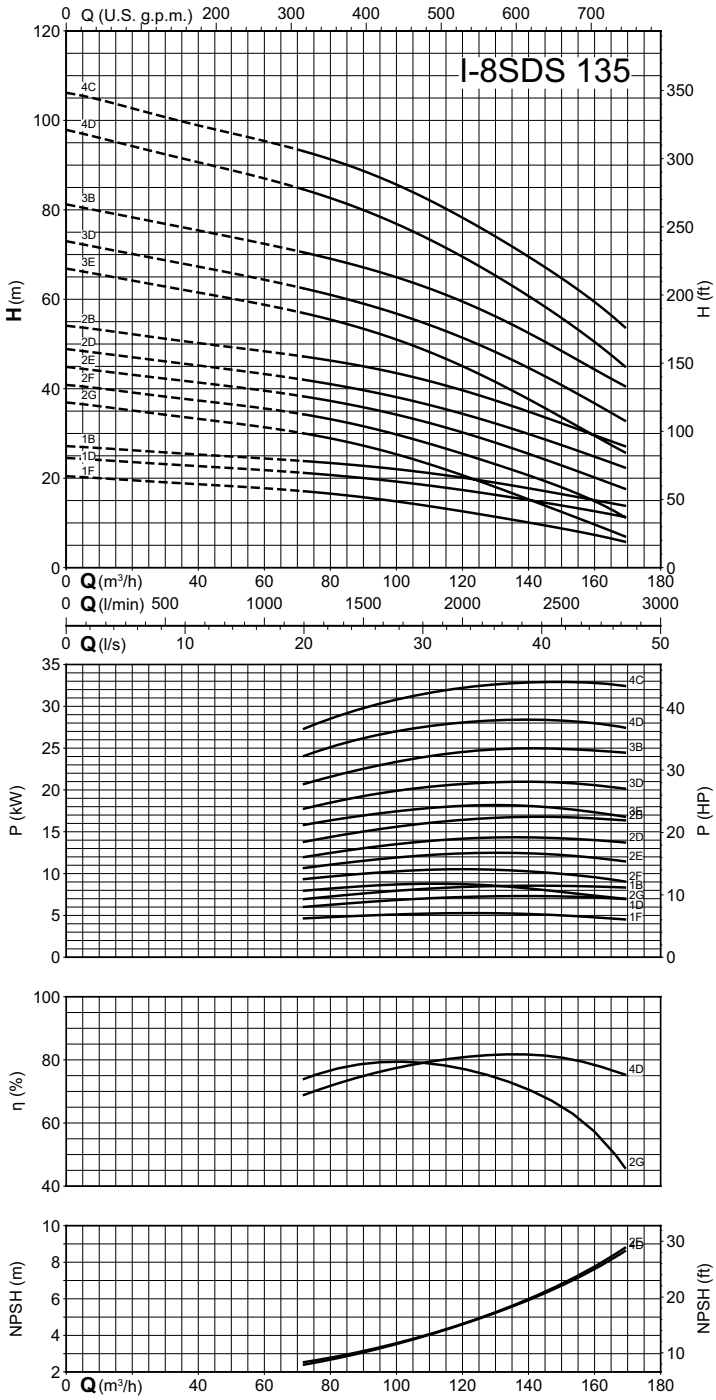


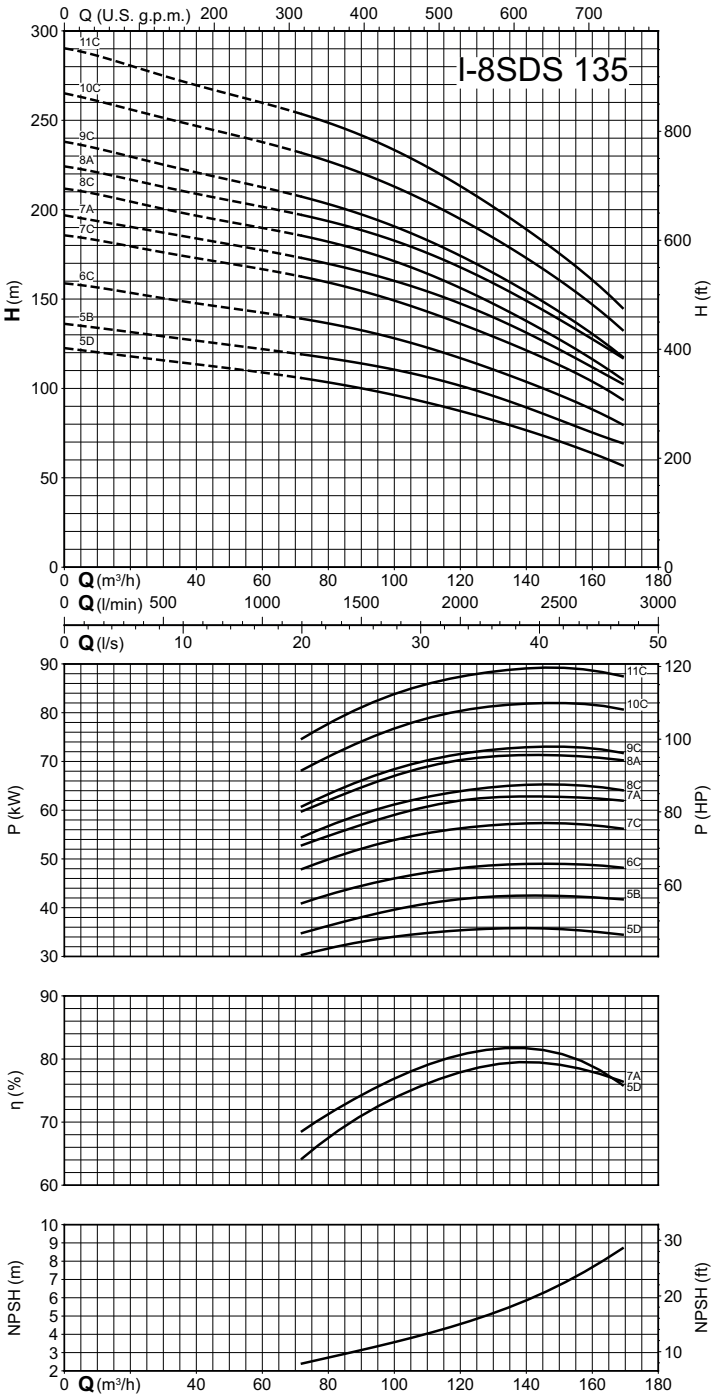

# SDS

calpeda

## Coverage chart n ≈ 2900 rpm

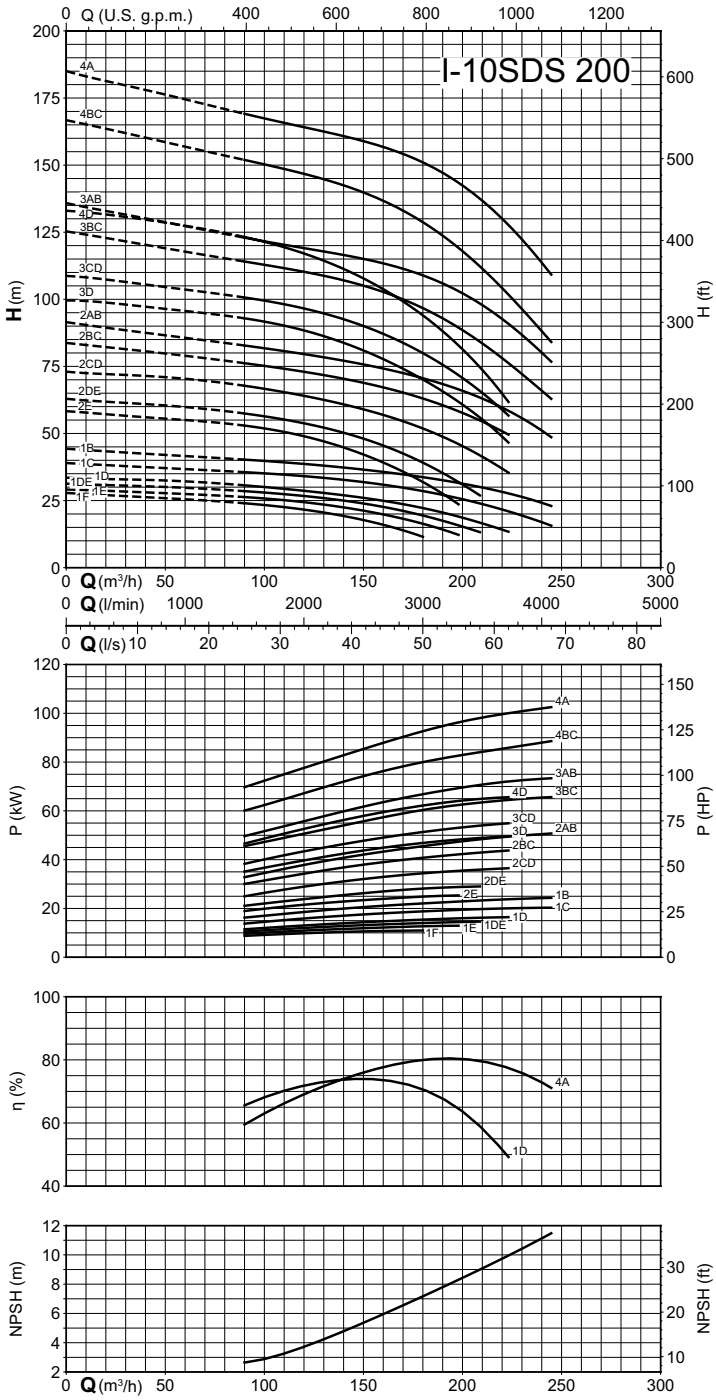


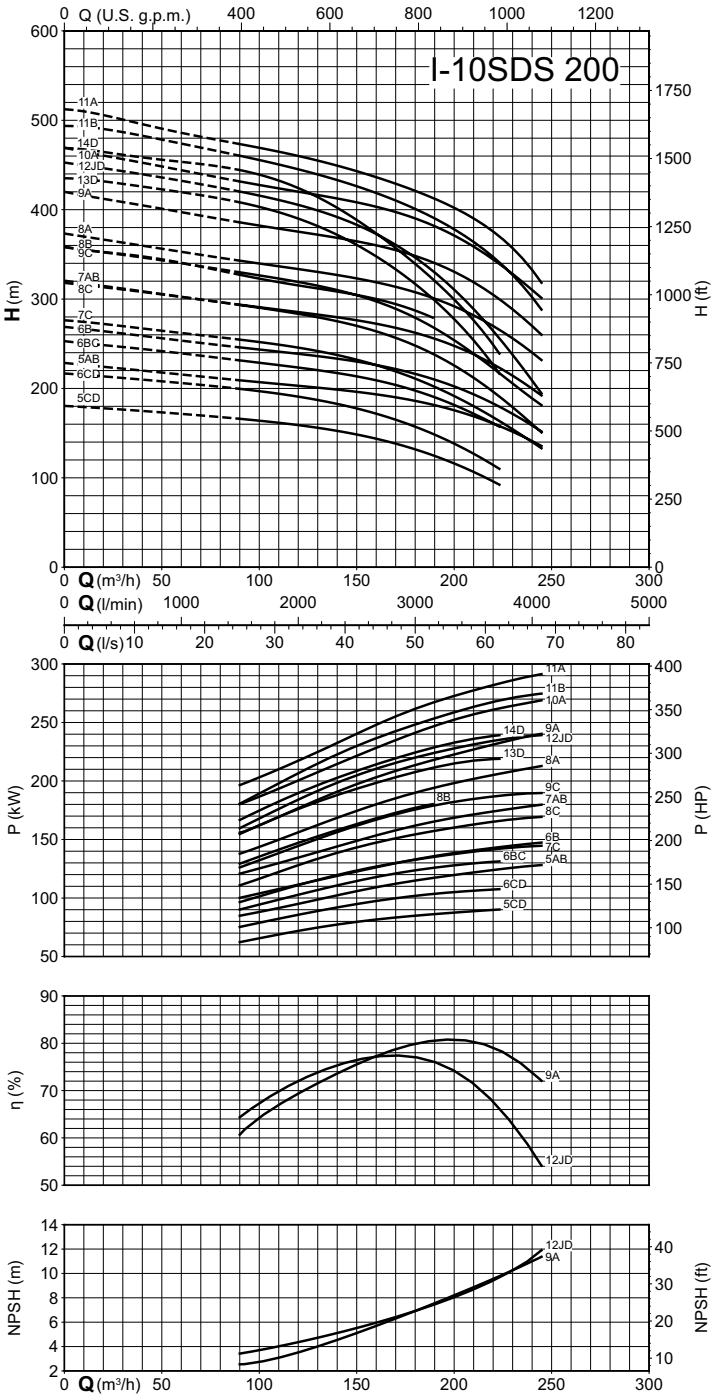

# SDS

calpeda®

## Coverage chart n ≈ 2900 rpm

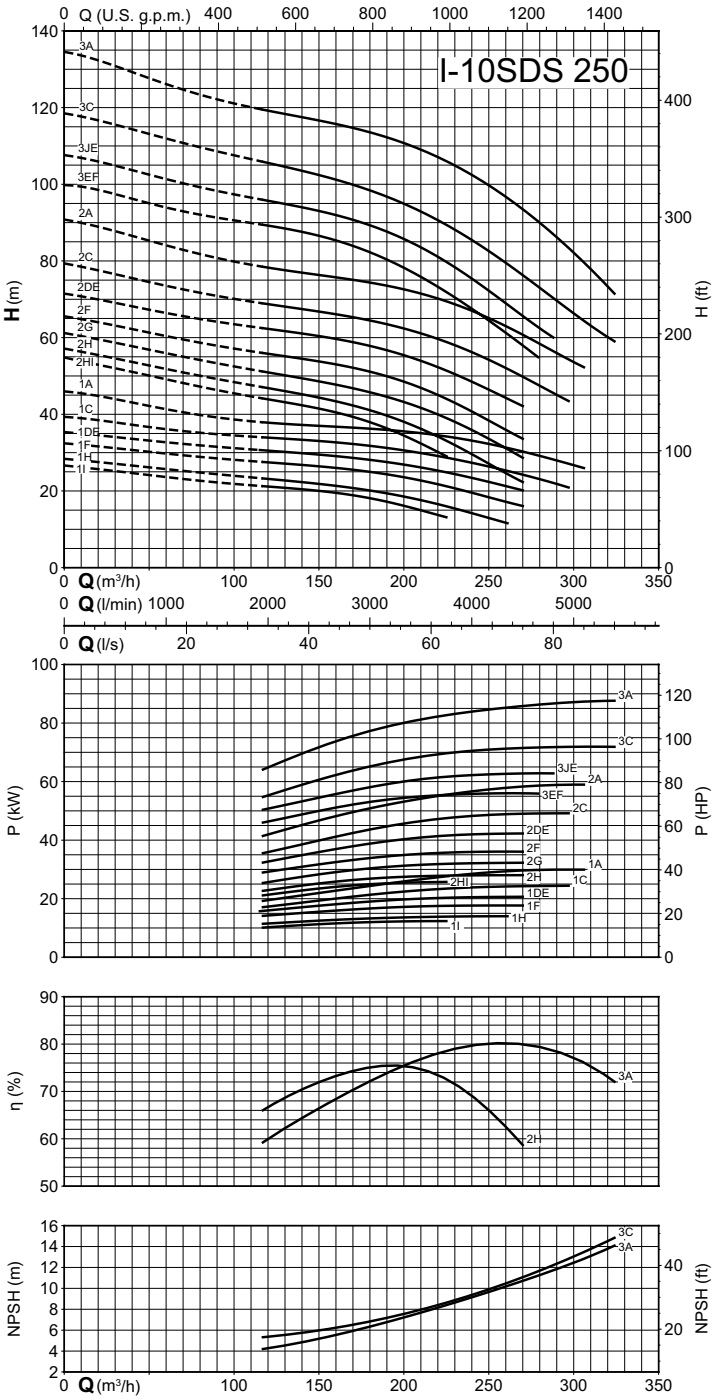


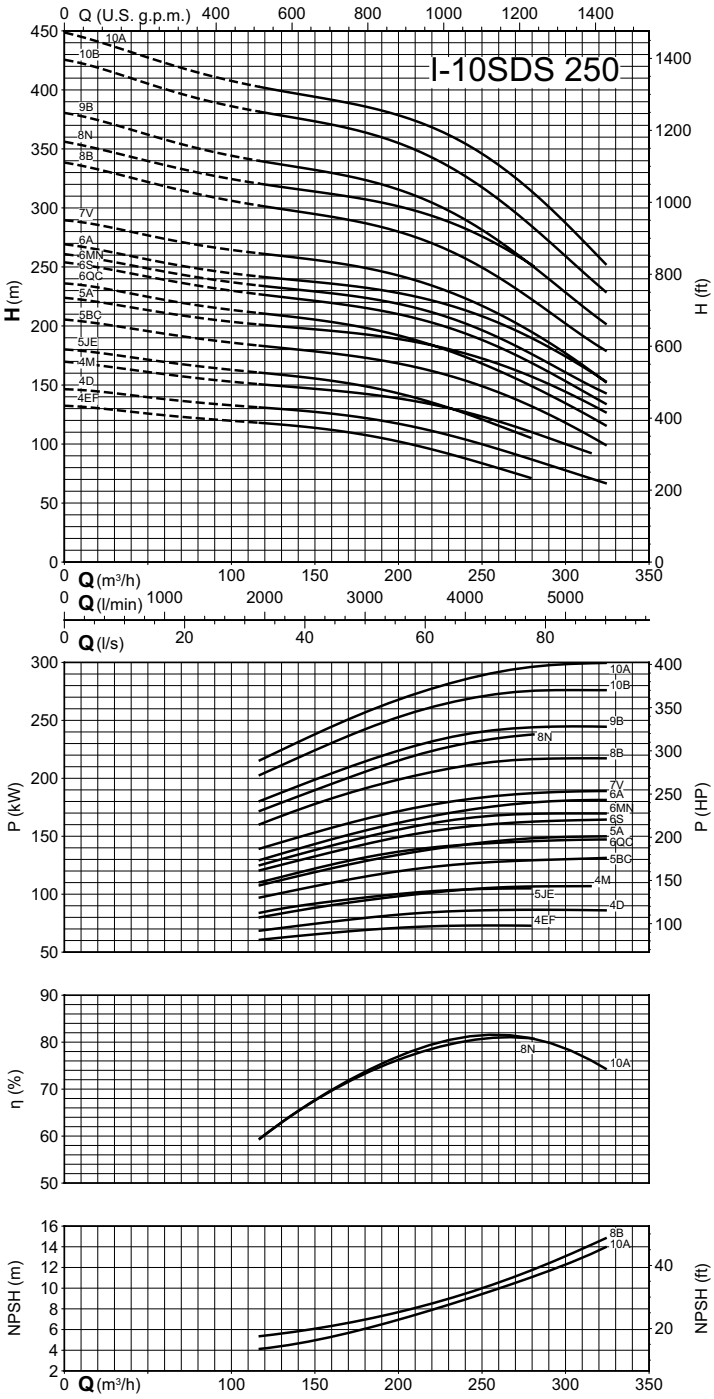

# SDS

## Coverage chart n ≈ 2900 rpm

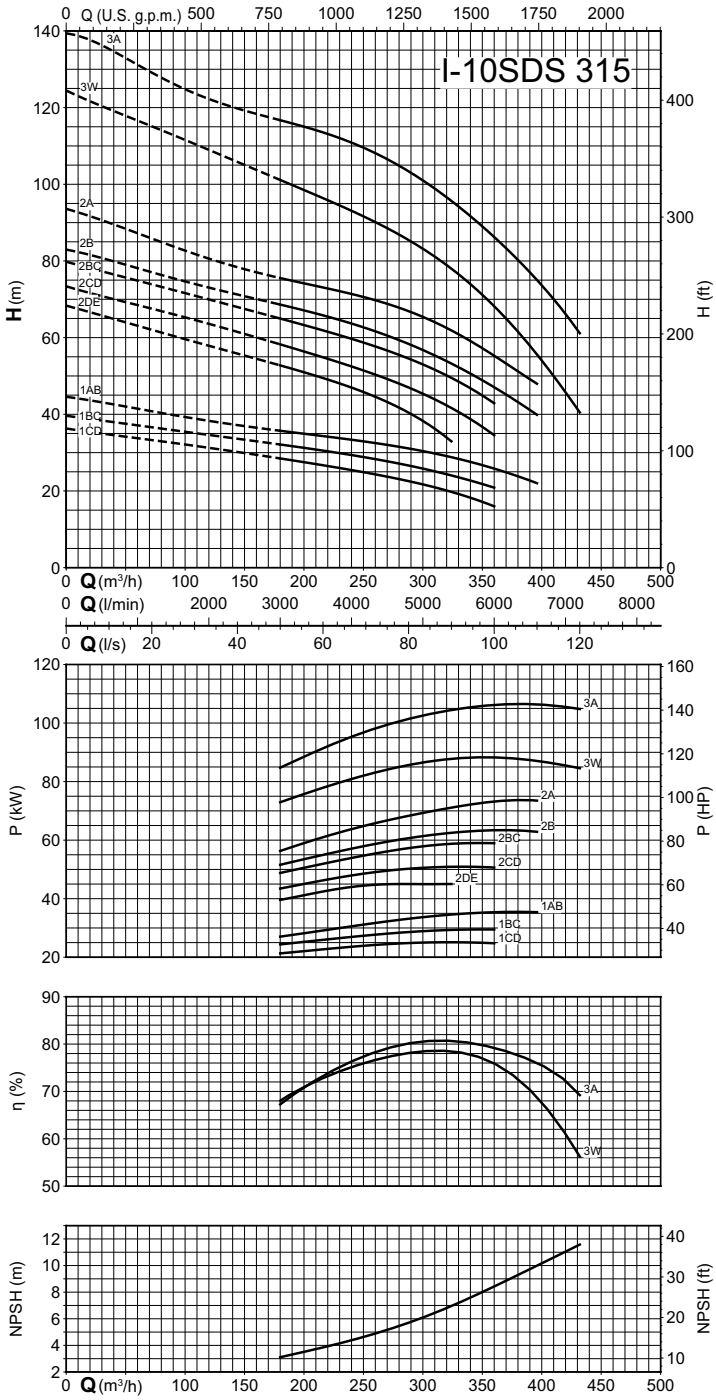


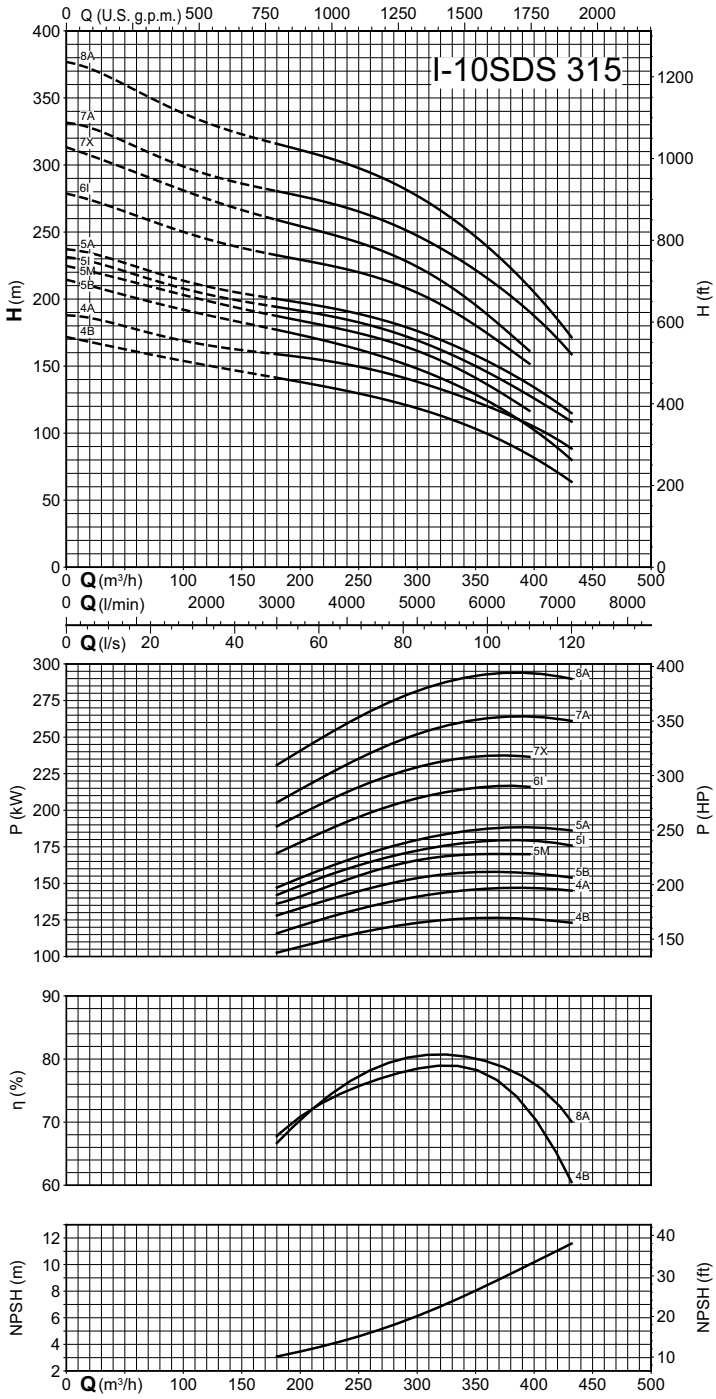

# SDS

## Coverage chart n ≈ 2900 rpm

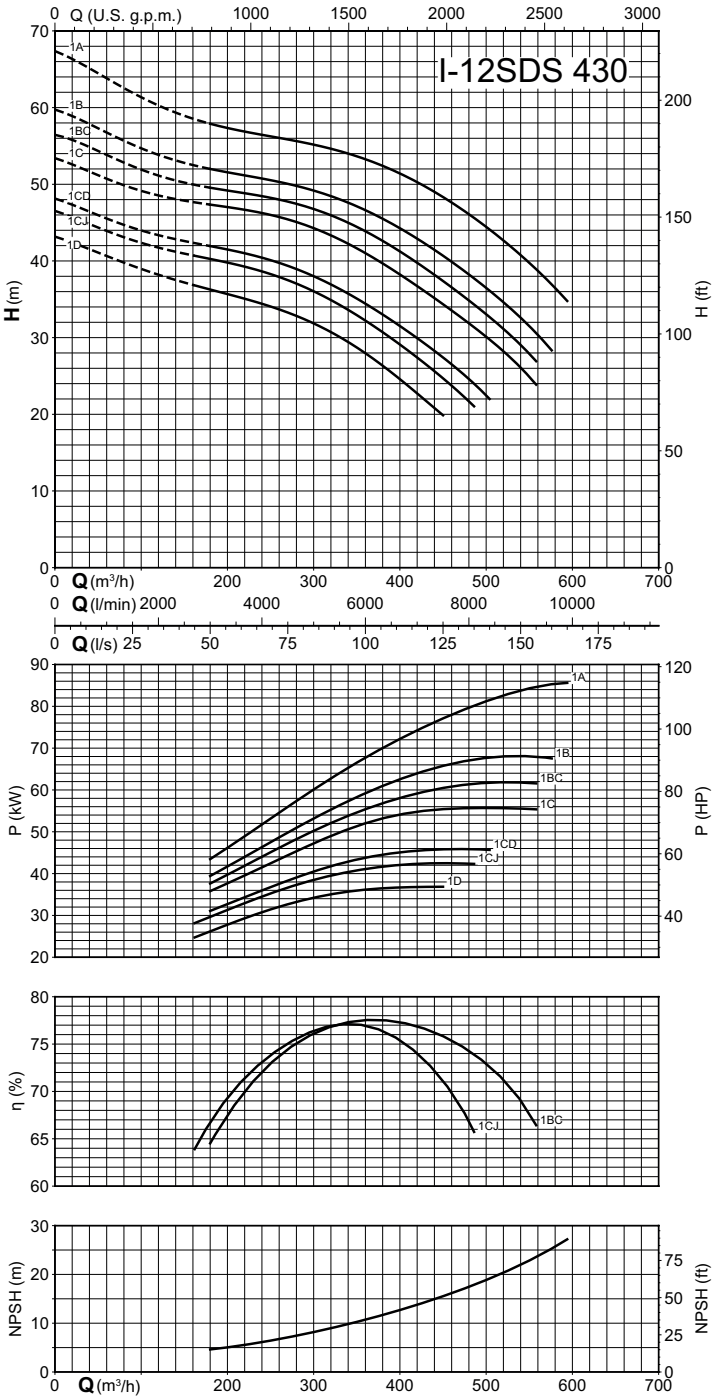


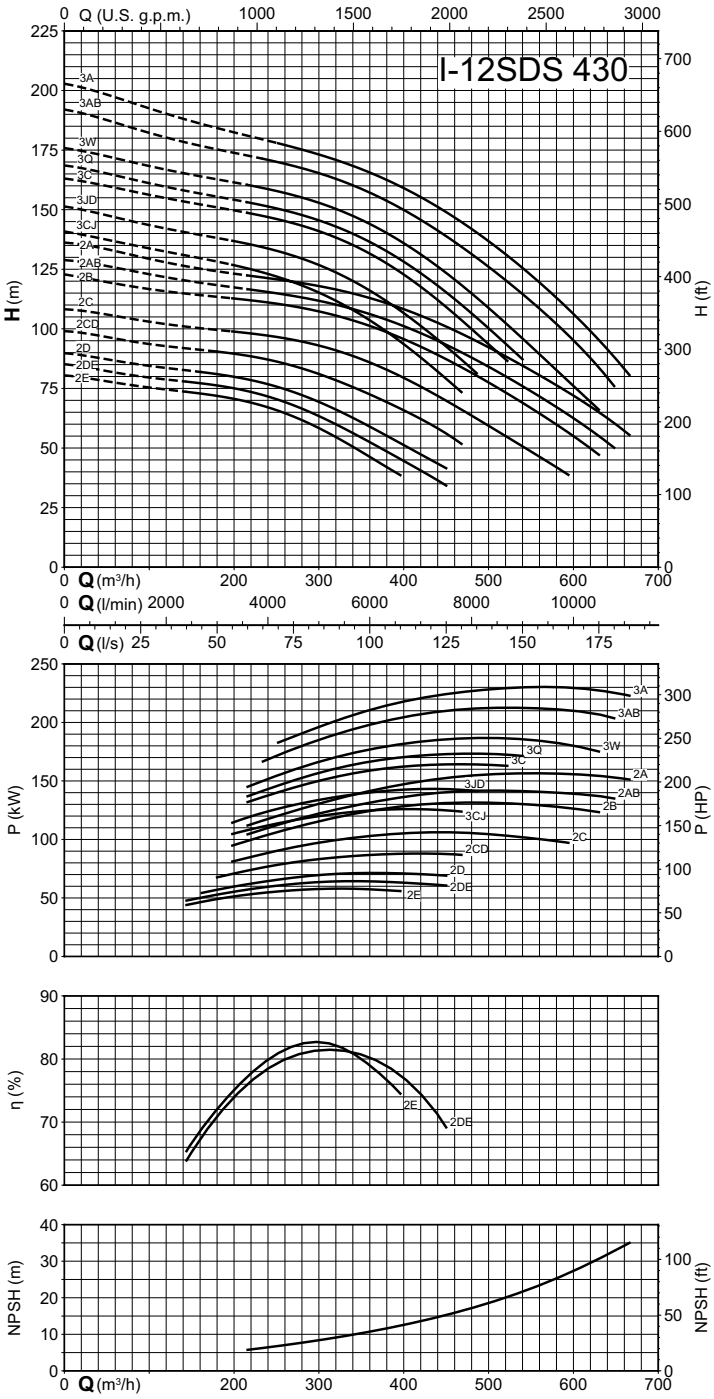

# SDS

## Coverage chart n ≈ 2900 rpm

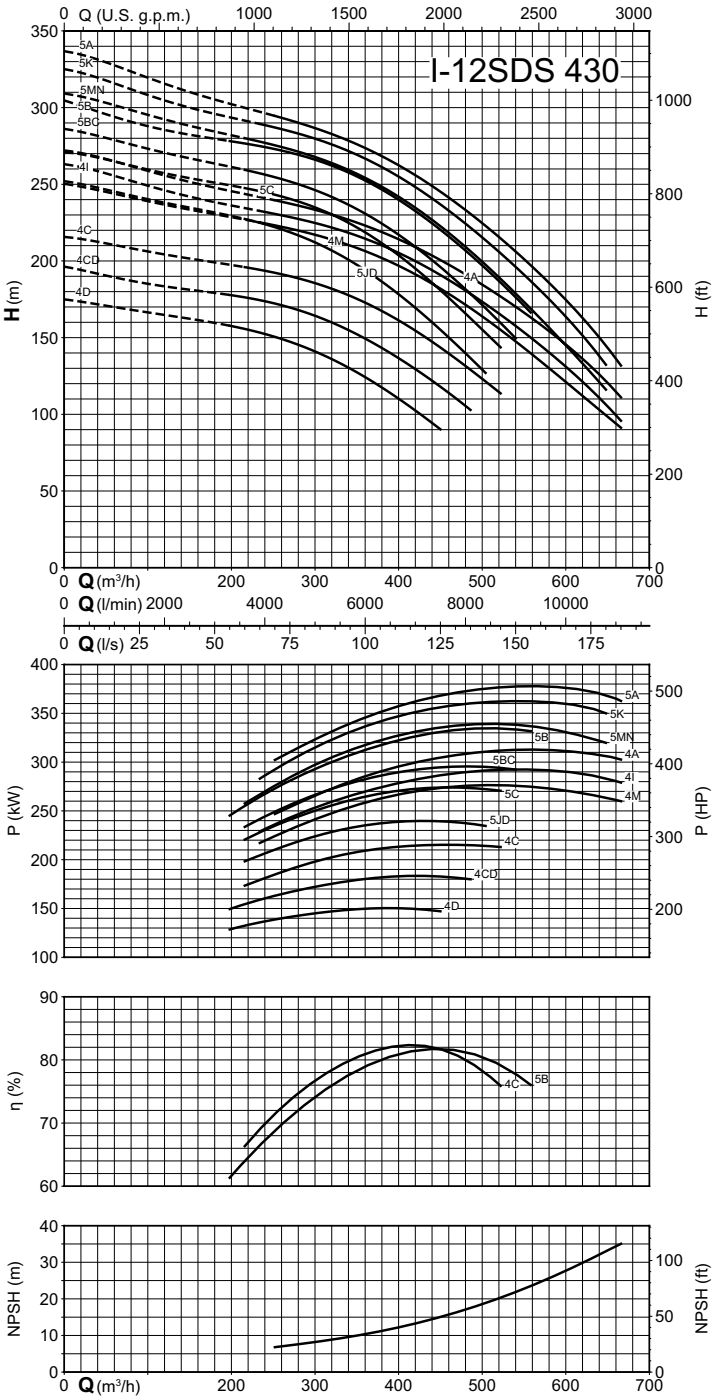

# SDS

calpeda

## Dimensions and weights

| TYPE | | mm | | | kg |
|---|---|---|---|---|---|
| | DN2 | f | l4 | l5 | Weight |
| 6SDS 35/3I 6SM | G3 | 674 | 145,5 | 150 | 31 |
| 6SDS 35/4I 6SM | G3 | 789 | 145,5 | 150 | 37 |
| 6SDS 35/6L 6SM | G3 | 1019 | 145,5 | 150 | 49 |
| 6SDS 35/7N 6SM | G3 | 1134 | 145,5 | 150 | 55 |
| 6SDS 35/8A 6SM | G3 | 1249 | 145,5 | 150 | 61 |
| 6SDS 35/10M 6SM | G3 | 1479 | 145,5 | 150 | 73 |
| 6SDS 35/11I 6SM | G3 | 1594 | 145,5 | 150 | 79 |
| 6SDS 35/12A 6SM | G3 | 1709 | 145,5 | 150 | 85 |
| 6SDS 35/14M 6SM | G3 | 1939 | 145,5 | 150 | 97 |
| 6SDS 35/15A 6SM | G3 | 2054 | 145,5 | 150 | 103 |
| 6SDS 35/16A 6SM | G3 | 2184 | 145,5 | 150 | 109 |
| 6SDS 35/17A 6SM | G3 | 2299 | 145,5 | 150 | 115 |
| 6SDS 35/19A 6SM | G3 | 2529 | 145,5 | 150 | 127 |
| 6SDS 35/21A 6SM | G3 | 2759 | 145,5 | 150 | 139 |
| 6SDS 35/22A 6SM | G3 | 2874 | 145,5 | 150 | 145 |
| 6SDS 35/24A 6SM | G3 | 3104 | 145,5 | 150 | 157 |
| 6SDS 35/25A 6SM | G3 | 3219 | 145,5 | 150 | 163 |
| 6SDS 35/27A 6SM | G3 | 3449 | 145,5 | 150 | 175 |
| 6SDS 35/30A 6SM | G3 | 3794 | 145,5 | 150 | 193 |
| 6SDS 35/32A 6SM | G3 | 4024 | 145,5 | 150 | 205 |

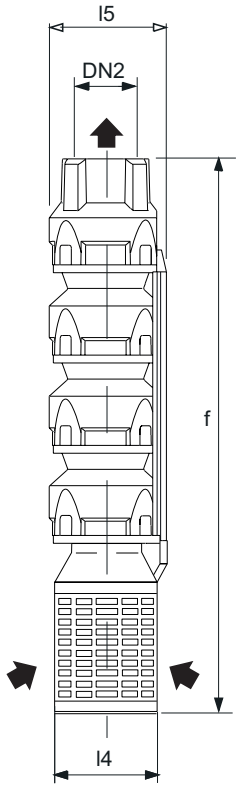


| TYPE | | mm | | | kg |
|---|---|---|---|---|---|
| | DN2 | f | l4 | l5 | Weight |
| 6SDS 45/2I 6SM | G3 | 559 | 145,5 | 150 | 25 |
| 6SDS 45/3N 6SM | G3 | 674 | 145,5 | 150 | 31 |
| 6SDS 45/3A 6SM | G3 | 674 | 145,5 | 150 | 31 |
| 6SDS 45/4N 6SM | G3 | 789 | 145,5 | 150 | 37 |
| 6SDS 45/5U 6SM | G3 | 904 | 145,5 | 150 | 43 |
| 6SDS 45/6P 6SM | G3 | 1019 | 145,5 | 150 | 49 |
| 6SDS 45/7L 6SM | G3 | 1134 | 145,5 | 150 | 55 |
| 6SDS 45/7A 6SM | G3 | 1134 | 145,5 | 150 | 55 |
| 6SDS 45/8A 6SM | G3 | 1249 | 145,5 | 150 | 61 |
| 6SDS 45/9A 6SM | G3 | 1364 | 145,5 | 150 | 67 |
| 6SDS 45/11I 6SM | G3 | 1594 | 145,5 | 150 | 79 |
| 6SDS 45/13I 6SM | G3 | 1824 | 145,5 | 150 | 91 |
| 6SDS 45/14A 6SM | G3 | 1939 | 145,5 | 150 | 97 |
| 6SDS 45/16A 6SM | G3 | 2169 | 145,5 | 150 | 109 |
| 6SDS 45/18A 6SM | G3 | 2399 | 145,5 | 150 | 121 |
| 6SDS 45/20A 6SM | G3 | 2629 | 145,5 | 150 | 133 |
| 6SDS 45/22A 6SM | G3 | 2859 | 145,5 | 150 | 145 |

**MOTORS TO CONNECT**
STANDARD coupling flange:
(6SM) NEMA 6, 6” motor;
(8SM) NEMA 8, 8”, 10” motor;
(12SM) C 12 Coupling, 12”, 14” motor;

| TYPE | | mm | | | kg |
|---|---|---|---|---|---|
| | DN2 | f | l4 | l5 | Weight |
| 6SDS 55/2A 6SM | G3 | 559 | 145,5 | 150 | 25 |
| 6SDS 55/3I 6SM | G3 | 674 | 145,5 | 150 | 31 |
| 6SDS 55/4A 6SM | G3 | 789 | 145,5 | 150 | 37 |
| 6SDS 55/5I 6SM | G3 | 904 | 145,5 | 150 | 43 |
| 6SDS 55/6I 6SM | G3 | 1019 | 145,5 | 150 | 49 |
| 6SDS 55/7I 6SM | G3 | 1134 | 145,5 | 150 | 55 |
| 6SDS 55/8I 6SM | G3 | 1249 | 145,5 | 150 | 61 |
| 6SDS 55/9A 6SM | G3 | 1364 | 145,5 | 150 | 67 |
| 6SDS 55/10A 6SM | G3 | 1479 | 145,5 | 150 | 73 |
| 6SDS 55/12N 6SM | G3 | 1709 | 145,5 | 150 | 85 |
| 6SDS 55/13A 6SM | G3 | 1824 | 145,5 | 150 | 91 |
| 6SDS 55/14A 6SM | G3 | 1939 | 145,5 | 150 | 97 |
| 6SDS 55/15A 6SM | G3 | 2054 | 145,5 | 150 | 103 |
| 6SDS 55/16A 6SM | G3 | 2169 | 145,5 | 150 | 109 |
| 6SDS 55/17A 6SM | G3 | 2284 | 145,5 | 150 | 115 |
| 6SDS 55/19A 6SM | G3 | 2514 | 145,5 | 150 | 127 |
| 6SDS 55/21A 6SM | G3 | 2744 | 145,5 | 150 | 139 |
| 6SDS 55/23A 6SM | G3 | 2974 | 145,5 | 150 | 151 |

# SDS

## Dimensions and weights

| TYPE | | mm | | | kg |
|---|---|---|---|---|---|
| | DN2 | f | l4 | l5 | Weight |
| 8SDS 65/1D 6SM | G5 | 560 | 192 | 203 | 35 |
| 8SDS 65/1A 6SM | G5 | 560 | 192 | 203 | 35 |
| 8SDS 65/2T 6SM | G5 | 695 | 192 | 203 | 45.5 |
| 8SDS 65/2C 6SM | G5 | 695 | 192 | 203 | 45.5 |
| 8SDS 65/2A 6SM | G5 | 695 | 192 | 203 | 45.5 |
| 8SDS 65/3E 6SM | G5 | 830 | 192 | 203 | 56 |
| 8SDS 65/3JD 6SM | G5 | 830 | 192 | 203 | 56 |
| 8SDS 65/3K 6SM | G5 | 830 | 192 | 203 | 56 |
| 8SDS 65/4JC 6SM | G5 | 965 | 192 | 203 | 66.5 |
| 8SDS 65/4A 6SM | G5 | 965 | 192 | 203 | 67 |
| 8SDS 65/5KC 6SM | G5 | 1100 | 192 | 203 | 77 |
| 8SDS 65/5A 6SM | G5 | 1100 | 192 | 203 | 77.5 |
| 8SDS 65/6U 6SM | G5 | 1235 | 192 | 203 | 89 |
| 8SDS 65/6U 8SM | G5 | 1260.5 | 192 | 203 | 87.5 |
| 8SDS 65/6C 6SM | G5 | 1235 | 192 | 203 | 87.5 |
| 8SDS 65/6C 8SM | G5 | 1260.5 | 192 | 203 | 87.5 |
| 8SDS 65/7A 6SM | G5 | 1370 | 192 | 203 | 98 |
| 8SDS 65/7A 8SM | G5 | 1395.5 | 192 | 203 | 98 |
| 8SDS 65/9T 6SM | G5 | 1640 | 192 | 203 | 118.5 |
| 8SDS 65/9T 8SM | G5 | 1665.5 | 192 | 203 | 119.5 |
| 8SDS 65/10Z 8SM | G5 | 1800.5 | 192 | 203 | 129.5 |
| 8SDS 65/11A 8SM | G5 | 1935.5 | 192 | 203 | 140 |
| 8SDS 65/12A 8SM | G5 | 2070.5 | 192 | 203 | 150.5 |
| 8SDS 65/14A 8SM | G5 | 2340.5 | 192 | 203 | 171.5 |
| 8SDS 65/16A 8SM | G5 | 2610.5 | 192 | 203 | 192.5 |
| 8SDS 65/17A 8SM | G5 | 2745.5 | 192 | 203 | 203 |

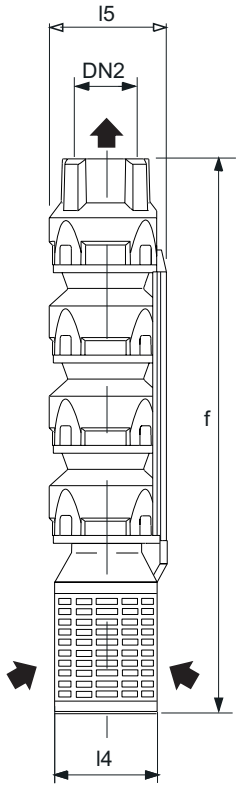


| TYPE | | mm | | | kg |
|---|---|---|---|---|---|
| | DN2 | f | l4 | l5 | Weight |
| 8SDS 95/1C 6SM | G5 | 565 | 192 | 203 | 36 |
| 8SDS 95/1A 6SM | G5 | 565 | 192 | 203 | 36 |
| 8SDS 95/2F 6SM | G5 | 705 | 192 | 203 | 47 |
| 8SDS 95/2DF 6SM | G5 | 705 | 192 | 203 | 47 |
| 8SDS 95/2D 6SM | G5 | 705 | 192 | 203 | 47 |
| 8SDS 95/2C 6SM | G5 | 705 | 192 | 203 | 47 |
| 8SDS 95/2A 6SM | G5 | 705 | 192 | 203 | 47 |
| 8SDS 95/3DJ 6SM | G5 | 845 | 192 | 203 | 58 |
| 8SDS 95/3C 6SM | G5 | 845 | 192 | 203 | 58 |
| 8SDS 95/3A 6SM | G5 | 845 | 192 | 203 | 58 |
| 8SDS 95/4D 6SM | G5 | 985 | 192 | 203 | 69 |
| 8SDS 95/4C 6SM | G5 | 985 | 192 | 203 | 69 |
| 8SDS 95/4C 8SM | G5 | 1010.5 | 192 | 203 | 69.5 |
| 8SDS 95/4A 6SM | G5 | 985 | 192 | 203 | 69 |
| 8SDS 95/4A 8SM | G5 | 1010.5 | 192 | 203 | 69.5 |
| 8SDS 95/5KC 6SM | G5 | 1125 | 192 | 203 | 80 |
| 8SDS 95/5KC 8SM | G5 | 1150.5 | 192 | 203 | 80.5 |
| 8SDS 95/5A 6SM | G5 | 1125 | 192 | 203 | 80 |
| 8SDS 95/5A 8SM | G5 | 1150.5 | 192 | 203 | 80.5 |
| 8SDS 95/6QC 6SM | G5 | 1125 | 192 | 203 | 91 |
| 8SDS 95/6QC 8SM | G5 | 1290.5 | 192 | 203 | 91.5 |
| 8SDS 95/7ZC 8SM | G5 | 1430.5 | 192 | 203 | 102.5 |
| 8SDS 95/7Z 8SM | G5 | 1430.5 | 192 | 203 | 102.5 |
| 8SDS 95/8Z 8SM | G5 | 1570.5 | 192 | 203 | 113.5 |
| 8SDS 95/10XC 8SM | G5 | 1850.5 | 192 | 203 | 135.5 |
| 8SDS 95/10A 8SM | G5 | 1850.5 | 192 | 203 | 135.5 |
| 8SDS 95/12C 8SM | G5 | 2130.5 | 192 | 203 | 157.5 |

**MOTORS TO CONNECT**
STANDARD coupling flange:
(6SM) NEMA 6, 6” motor;
(8SM) NEMA 8, 8”, 10” motor;
(12SM) C 12 Coupling, 12”, 14” motor;

# SDS

## Dimensions and weights

| TYPE | | mm | | | kg |
|---|---|---|---|---|---|
| | DN2 | f | l4 | l5 | Weight |
| 8SDS 135/1F 6SM | G5 | 565 | 192 | 203 | 36 |
| 8SDS 135/1D 6SM | G5 | 565 | 192 | 203 | 36 |
| 8SDS 135/1B 6SM | G5 | 565 | 192 | 203 | 36 |
| 8SDS 135/2G 6SM | G5 | 705 | 192 | 203 | 47 |
| 8SDS 135/2F 6SM | G5 | 705 | 192 | 203 | 47 |
| 8SDS 135/2E 6SM | G5 | 705 | 192 | 203 | 47 |
| 8SDS 135/2D 6SM | G5 | 705 | 192 | 203 | 47 |
| 8SDS 135/2B 6SM | G5 | 705 | 192 | 203 | 47 |
| 8SDS 135/3E 6SM | G5 | 845 | 192 | 203 | 58 |
| 8SDS 135/3D 6SM | G5 | 845 | 192 | 203 | 58 |
| 8SDS 135/3B 6SM | G5 | 845 | 192 | 203 | 58 |
| 8SDS 135/4D 6SM | G5 | 985 | 192 | 203 | 69 |
| 8SDS 135/4D 8SM | G5 | 1010.5 | 192 | 203 | 72 |
| 8SDS 135/4C 6SM | G5 | 985 | 192 | 203 | 69 |
| 8SDS 135/4C 8SM | G5 | 1010.5 | 192 | 203 | 72 |
| 8SDS 135/5D 6SM | G5 | 1125 | 192 | 203 | 80 |
| 8SDS 135/5D 8SM | G5 | 1150.5 | 192 | 203 | 83 |
| 8SDS 135/5B 6SM | G5 | 1125 | 192 | 203 | 83 |
| 8SDS 135/5B 8SM | G5 | 1150.5 | 192 | 203 | 83 |
| 8SDS 135/6C 8SM | G5 | 1290.5 | 192 | 203 | 94 |
| 8SDS 135/7C 8SM | G5 | 1430.5 | 192 | 203 | 105 |
| 8SDS 135/7A 8SM | G5 | 1430.5 | 192 | 203 | 105 |
| 8SDS 135/8C 8SM | G5 | 1570.5 | 192 | 203 | 116 |
| 8SDS 135/8A 8SM | G5 | 1570.5 | 192 | 203 | 116 |
| 8SDS 135/9C 8SM | G5 | 1710.5 | 192 | 203 | 127 |
| 8SDS 135/10C 8SM | G5 | 1850.5 | 192 | 203 | 138 |
| 8SDS 135/11C 8SM | G5 | 1990.5 | 192 | 203 | 149 |

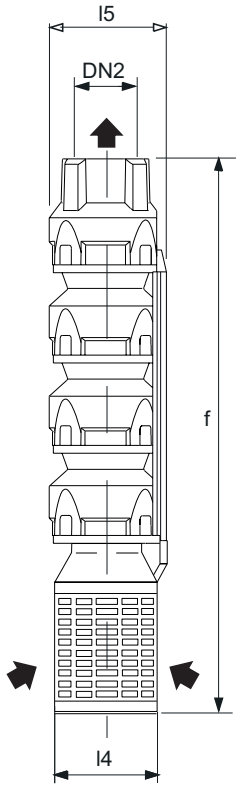


**MOTORS TO CONNECT**
STANDARD coupling flange:
(6SM) NEMA 6, 6” motor;
(8SM) NEMA 8, 8”, 10” motor;
(12SM) C 12 Coupling, 12”, 14” motor;

# SDS

## Dimensions and weights

| TYPE | | mm | | | kg |
|---|---|---|---|---|---|
| | DN2 | f | l4 | l5 | Weight |
| 8SDR 35/11A 6SM | G3 | 1198 | 188 | 196 | 79 |
| 8SDR 35/13A 6SM | G3 | 1314 | 188 | 196 | 88 |
| 8SDR 35/15A 6SM | G3 | 1430 | 188 | 196 | 97 |
| 8SDR 35/15A 8SM | G3 | 1455.5 | 188 | 197,5 | 97 |
| 8SDR 35/17A 6SM | G3 | 1546 | 188 | 196 | 106 |
| 8SDR 35/17A 8SM | G3 | 1571.5 | 188 | 197,5 | 106 |
| 8SDR 35/19A 6SM | G3 | 1662 | 188 | 196 | 115 |
| 8SDR 35/19A 8SM | G3 | 1687.5 | 188 | 197,5 | 115 |
| 8SDR 35/23A 6SM | G3 | 1894 | 188 | 196 | 133 |
| 8SDR 35/23A 8SM | G3 | 1919.5 | 188 | 197,5 | 133 |
| 8SDR B35/27A 8SM | G3 | 2253.5 | 188 | 197,5 | 157 |
| 8SDR B35/31A 8SM | G3 | 2485.5 | 188 | 197,5 | 175 |
| 8SDR B35/35A 8SM | G3 | 2717.5 | 188 | 197,5 | 193 |

| TYPE | | mm | | | kg |
|---|---|---|---|---|---|
| | DN2 | f | l4 | l5 | Weight |
| 8SDR 40/6A 6SM | G3 | 968 | 188 | 196 | 56.5 |
| 8SDR 40/7A 6SM | G3 | 1038 | 188 | 196 | 61 |
| 8SDR 40/8A 6SM | G3 | 1108 | 188 | 196 | 65.5 |
| 8SDR 40/9A 6SM | G3 | 1178 | 188 | 196 | 70 |
| 8SDR 40/9A 8SM | G3 | 1215.5 | 188 | 197,5 | 70 |
| 8SDR 40/11A 6SM | G3 | 1318 | 188 | 196 | 81.4 |
| 8SDR 40/11A 8SM | G3 | 1355.5 | 188 | 197,5 | 79 |
| 8SDR 40/13A 6SM | G3 | 1458 | 188 | 196 | 86 |
| 8SDR 40/13A 8SM | G3 | 1495.5 | 188 | 197,5 | 88 |
| 8SDR 40/15A 8SM | G3 | 1565.5 | 188 | 197,5 | 97 |
| 8SDR 40/17A 8SM | G3 | 1705.5 | 188 | 197,5 | 106 |
| 8SDR 40/19A 8SM | G3 | 1845.5 | 188 | 197,5 | 115 |
| 8SDR B40/21A 8SM | G3 | 2157.5 | 188 | 197,5 | 130 |
| 8SDR B40/23A 8SM | G3 | 2297.5 | 188 | 197,5 | 139 |
| 8SDR B40/25A 8SM | G3 | 2437.5 | 188 | 197,5 | 148 |
| 8SDR B40/28A 8SM | G3 | 2647.5 | 188 | 197,5 | 161.5 |
| 8SDR B40/30A 8SM | G3 | 2787.5 | 188 | 197,5 | 200.5 |

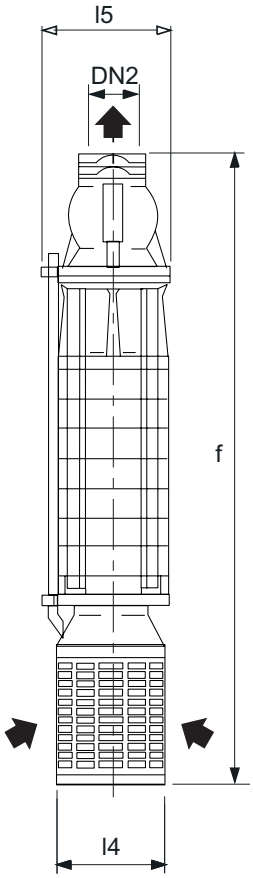


**MOTORS TO CONNECT**
STANDARD coupling flange:
(6SM) NEMA 6, 6” motor;
(8SM) NEMA 8, 8”, 10” motor;
(12SM) C 12 Coupling, 12”, 14” motor;

# SDS

## Dimensions and weights

| TYPE | | mm | | | | | | | | kg |
|---|---|---|---|---|---|---|---|---|---|---|
| | DN2 | de | dk | f | j4 | l4 | l5 | s | z | Weight |
| 10SDS 50/1H 6SM | 150 | 234 | 206 | 680 | 170.5 | 240 | 250 | 16 | 6 | 73 |
| 10SDS 50/1F 6SM | 150 | 234 | 206 | 680 | 170.5 | 240 | 250 | 16 | 6 | 73 |
| 10SDS 50/1D 6SM | 150 | 234 | 206 | 680 | 170.5 | 240 | 250 | 16 | 6 | 73 |
| 10SDS 50/1B 6SM | 150 | 234 | 206 | 680 | 170.5 | 240 | 250 | 16 | 6 | 73 |
| 10SDS 50/2G 6SM | 150 | 234 | 206 | 845 | 170.5 | 240 | 250 | 16 | 6 | 91 |
| 10SDS 50/2E 6SM | 150 | 234 | 206 | 845 | 170.5 | 240 | 250 | 16 | 6 | 91 |
| 10SDS 50/2CD 6SM | 150 | 234 | 206 | 845 | 170.5 | 240 | 250 | 16 | 6 | 91 |
| 10SDS 50/2B 6SM | 150 | 234 | 206 | 845 | 170.5 | 240 | 250 | 16 | 6 | 91 |
| 10SDS 50/2B 8SM | 150 | 234 | 206 | 873.5 | 170.5 | 240 | 250 | 16 | 6 | 89 |
| 10SDS 50/3D 6SM | 150 | 234 | 206 | 1035.5 | 170.5 | 240 | 250 | 16 | 6 | 109 |
| 10SDS 50/3D 8SM | 150 | 234 | 206 | 1038.5 | 170.5 | 240 | 250 | 16 | 6 | 107 |
| 10SDS 50/3B 6SM | 150 | 234 | 206 | 1035.5 | 170.5 | 240 | 250 | 16 | 6 | 109 |
| 10SDS 50/3B 8SM | 150 | 234 | 206 | 1038.5 | 170.5 | 240 | 250 | 16 | 6 | 107 |
| 10SDS 50/4CD 8SM | 150 | 234 | 206 | 1203.5 | 170.5 | 240 | 250 | 16 | 6 | 125 |
| 10SDS 50/4B 8SM | 150 | 234 | 206 | 1203.5 | 170.5 | 240 | 250 | 16 | 6 | 125 |
| 10SDS 50/5CD 8SM | 150 | 234 | 206 | 1368.5 | 170.5 | 240 | 250 | 16 | 6 | 143 |
| 10SDS 50/5B 8SM | 150 | 234 | 206 | 1368.5 | 170.5 | 240 | 250 | 16 | 6 | 143 |
| 10SDS 50/6C 8SM | 150 | 234 | 206 | 1533.5 | 170.5 | 240 | 250 | 16 | 6 | 161 |
| 10SDS 50/7CD 8SM | 150 | 234 | 206 | 1698.5 | 170.5 | 240 | 250 | 16 | 6 | 179 |
| 10SDS 50/8C 8SM | 150 | 234 | 206 | 1863.5 | 170.5 | 240 | 250 | 16 | 6 | 197 |
| 10SDS 50/8B 8SM | 150 | 234 | 206 | 1863.5 | 170.5 | 240 | 251 | 16 | 6 | 197 |
| 10SDS 50/9BC 8SM | 150 | 234 | 206 | 2028.5 | 170.5 | 240 | 251 | 16 | 6 | 215 |
| 10SDS 50/10B 8SM | 150 | 234 | 206 | 2193.5 | 170.5 | 240 | 251 | 16 | 6 | 224 |
| 10SDS 50/11B 8SM | 150 | 234 | 206 | 2358.5 | 170.5 | 240 | 251 | 16 | 6 | 236 |
| 10SDS 50/12JC 8SM | 150 | 234 | 206 | 2523.5 | 170.5 | 240 | 251 | 16 | 6 | 258 |
| 10SDS 50/12JC 12SM | 150 | 234 | 206 | 2644 | 170.5 | 290 | 296 | 16 | 6 | 296 |
| 10SDS 50/13B 12SM | 150 | 234 | 206 | 2809 | 170.5 | 290 | 296 | 16 | 6 | 314 |
| 10SDS 50/13B 8SM | 150 | 234 | 206 | 2688.5 | 170.5 | 240 | 251 | 16 | 6 | 280 |
| 10SDS 50/14B 12SM | 150 | 234 | 206 | 2974 | 170.5 | 290 | 296 | 16 | 6 | 332 |
| 10SDS 50/15B 12SM | 150 | 234 | 206 | 3139 | 170.5 | 290 | 296 | 16 | 6 | 350 |

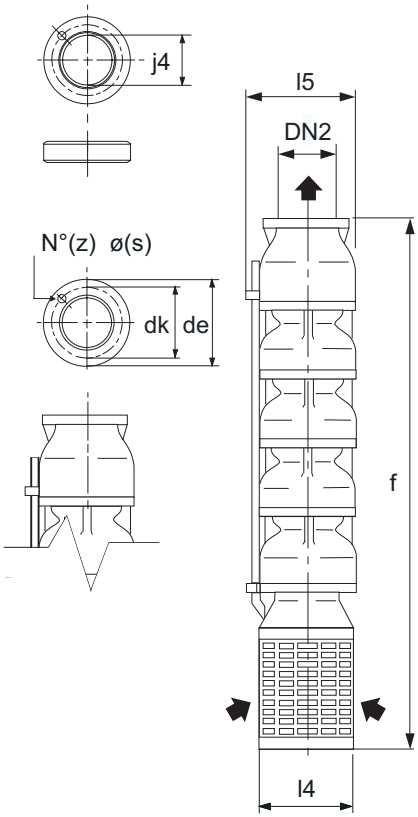


| TYPE | | mm | | | | | | | | kg |
|---|---|---|---|---|---|---|---|---|---|---|
| | DN2 | de | dk | f | j4 | l4 | l5 | s | z | Weight |
| 10SDS 55/2B 6SM | 150 | 234 | 206 | 845 | 170.5 | 240 | 250 | 16 | 6 | 91 |
| 10SDS 55/2B 8SM | 150 | 234 | 206 | 873.5 | 170.5 | 240 | 250 | 16 | 6 | 89 |
| 10SDS 55/2A 6SM | 150 | 234 | 206 | 845 | 170.5 | 240 | 250 | 16 | 6 | 91 |
| 10SDS 55/2A 8SM | 150 | 234 | 206 | 873.5 | 170.5 | 240 | 250 | 16 | 6 | 89 |
| 10SDS 55/3C 6SM | 150 | 234 | 206 | 1035.5 | 170.5 | 240 | 250 | 16 | 6 | 109 |
| 10SDS 55/3C 8SM | 150 | 234 | 206 | 1038.5 | 170.5 | 240 | 250 | 16 | 6 | 107 |
| 10SDS 55/3K 6SM | 150 | 234 | 206 | 1035.5 | 170.5 | 240 | 250 | 16 | 6 | 109 |
| 10SDS 55/3K 8SM | 150 | 234 | 206 | 1038.5 | 170.5 | 240 | 250 | 16 | 6 | 107 |
| 10SDS 55/3A 8SM | 150 | 234 | 206 | 1038.5 | 170.5 | 240 | 250 | 16 | 6 | 107 |
| 10SDS 55/4S 8SM | 150 | 234 | 206 | 1203.5 | 170.5 | 240 | 250 | 16 | 6 | 125 |
| 10SDS 55/4K 8SM | 150 | 234 | 206 | 1203.5 | 170.5 | 240 | 250 | 16 | 6 | 125 |
| 10SDS 55/4A 8SM | 150 | 234 | 206 | 1203.5 | 170.5 | 240 | 250 | 16 | 6 | 125 |
| 10SDS 55/5A 8SM | 150 | 234 | 206 | 1368.5 | 170.5 | 240 | 250 | 16 | 6 | 143 |
| 10SDS 55/6A 8SM | 150 | 234 | 206 | 1533.5 | 170.5 | 240 | 250 | 16 | 6 | 161 |
| 10SDS 55/7A 8SM | 150 | 234 | 206 | 1698.5 | 170.5 | 240 | 250 | 16 | 6 | 179 |
| 10SDS 55/8A 8SM | 150 | 234 | 206 | 1863.5 | 170.5 | 240 | 251 | 16 | 6 | 197 |
| 10SDS 55/9K 8SM | 150 | 234 | 206 | 2028.5 | 170.5 | 240 | 251 | 16 | 6 | 216 |
| 10SDS 55/10A 8SM | 150 | 234 | 206 | 2193.5 | 170.5 | 240 | 251 | 16 | 6 | 230 |
| 10SDS 55/11A 8SM | 150 | 234 | 206 | 2358.5 | 170.5 | 240 | 251 | 16 | 6 | 248 |
| 10SDS 55/11A 12SM | 150 | 234 | 206 | 2479 | 170.5 | 290 | 296 | 16 | 6 | 278 |
| 10SDS 55/12A 12SM | 150 | 234 | 206 | 2644 | 170.5 | 290 | 296 | 16 | 6 | 296 |
| 10SDS 55/12A 8SM | 150 | 234 | 206 | 2523.5 | 170.5 | 240 | 251 | 16 | 6 | 266 |
| 10SDS 55/13A 12SM | 150 | 234 | 206 | 2809 | 170.5 | 290 | 296 | 16 | 6 | 314 |
| 10SDS 55/14A 12SM | 150 | 234 | 206 | 2974 | 170.5 | 290 | 296 | 16 | 6 | 332 |
| 10SDS 55/15A 12SM | 150 | 234 | 206 | 3139 | 170.5 | 290 | 296 | 16 | 6 | 350 |

**MOTORS TO CONNECT**
STANDARD coupling flange:
(6SM) NEMA 6, 6” motor;
(8SM) NEMA 8, 8”, 10” motor;
(12SM) C 12 Coupling, 12”, 14” motor;

# SDS

## Dimensions and weights

| TYPE | | mm | | | | | | | | kg |
|---|---|---|---|---|---|---|---|---|---|---|
| | DN2 | de | dk | f | j4 | l4 | l5 | s | z | Weight |
| 10SDS 64/1H 6SM | 150 | 234 | 206 | 650 | 170.5 | 240 | 250 | 16 | 6 | 68.5 |
| 10SDS 64/1G 6SM | 150 | 234 | 206 | 650 | 170.5 | 240 | 250 | 16 | 6 | 68.5 |
| 10SDS 64/1EF 6SM | 150 | 234 | 206 | 650 | 170.5 | 240 | 250 | 16 | 6 | 68.5 |
| 10SDS 64/1CD 6SM | 150 | 234 | 206 | 650 | 170.5 | 240 | 250 | 16 | 6 | 68.5 |
| 10SDS 64/1BC 6SM | 150 | 234 | 206 | 650 | 170.5 | 240 | 250 | 16 | 6 | 68.5 |
| 10SDS 64/1A 6SM | 150 | 234 | 206 | 650 | 170.5 | 240 | 250 | 16 | 6 | 68.5 |
| 10SDS 64/1A 8SM | 150 | 234 | 206 | 675.5 | 170.5 | 240 | 250 | 16 | 6 | 66.5 |
| 10SDS 64/2EF 6SM | 150 | 234 | 206 | 815 | 170.5 | 240 | 250 | 16 | 6 | 89 |
| 10SDS 64/2EF 8SM | 150 | 234 | 206 | 840.5 | 170.5 | 240 | 250 | 16 | 6 | 87 |
| 10SDS 64/2CD 6SM | 150 | 234 | 206 | 815 | 170.5 | 240 | 250 | 16 | 6 | 89 |
| 10SDS 64/2CD 8SM | 150 | 234 | 206 | 840.5 | 170.5 | 240 | 250 | 16 | 6 | 87 |
| 10SDS 64/2BC 8SM | 150 | 234 | 206 | 840.5 | 170.5 | 240 | 250 | 16 | 6 | 87 |
| 10SDS 64/2A 8SM | 150 | 234 | 206 | 840.5 | 170.5 | 240 | 250 | 16 | 6 | 87 |
| 10SDS 64/3D 8SM | 150 | 234 | 206 | 1005.5 | 170.5 | 240 | 250 | 16 | 6 | 107.5 |
| 10SDS 64/3C 8SM | 150 | 234 | 206 | 1005.5 | 170.5 | 240 | 250 | 16 | 6 | 107.5 |
| 10SDS 64/3A 8SM | 150 | 234 | 206 | 1005.5 | 170.5 | 240 | 250 | 16 | 6 | 107.5 |
| 10SDS 64/4B 8SM | 150 | 234 | 206 | 1170.5 | 170.5 | 240 | 250 | 16 | 6 | 128 |
| 10SDS 64/4A 8SM | 150 | 234 | 206 | 1170.5 | 170.5 | 240 | 250 | 16 | 6 | 128 |
| 10SDS 64/5BC 8SM | 150 | 234 | 206 | 1335.5 | 170.5 | 240 | 250 | 16 | 6 | 148.5 |
| 10SDS 64/5K 8SM | 150 | 234 | 206 | 1335.5 | 170.5 | 240 | 250 | 16 | 6 | 132 |

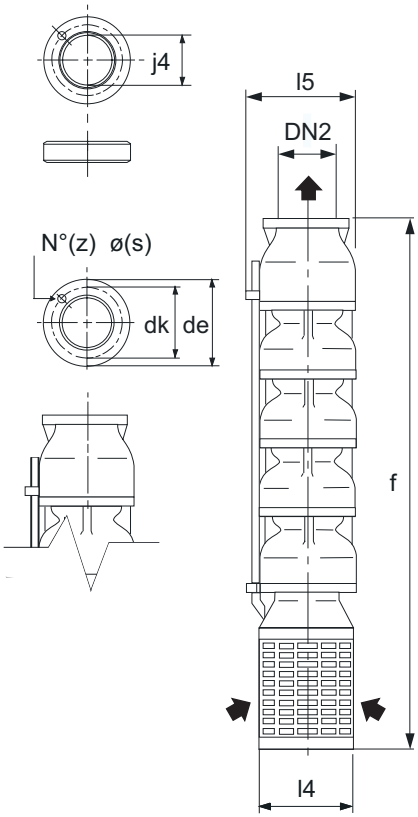


**MOTORS TO CONNECT**
STANDARD coupling flange:
(6SM) NEMA 6, 6” motor;
(8SM) NEMA 8, 8”, 10” motor;
(12SM) C 12 Coupling, 12”, 14” motor;

# SDS

## Dimensions and weights

| TYPE | | mm | | | kg |
|---|---|---|---|---|---|
| | DN2 | f | l4 | l5 | Weight |
| 10SDR 30/5A 8SM | G4 | 958.5 | 215 | 244 | 98 |
| 10SDR 30/6A 8SM | G4 | 1030.5 | 215 | 244 | 108 |
| 10SDR 30/8M 8SM | G4 | 1174.5 | 215 | 244 | 127 |
| 10SDR 30/9K 8SM | G4 | 1246.5 | 215 | 244 | 137 |
| 10SDR 30/10A 8SM | G4 | 1318.5 | 215 | 244 | 147 |
| 10SDR 30/11A 8SM | G4 | 1390.5 | 215 | 244 | 157 |
| 10SDR 30/13M 8SM | G4 | 1534.5 | 215 | 244 | 177 |
| 10SDR 30/14A 8SM | G4 | 1606.5 | 215 | 244 | 187 |
| 10SDR 30/15A 8SM | G4 | 1678.5 | 215 | 244 | 197 |
| 10SDR B30/16A 8SM | G4 | 1838.5 | 215 | 244 | 217 |
| 10SDR B30/17A 8SM | G4 | 1910.5 | 215 | 244 | 227 |
| 10SDR B30/18A 8SM | G4 | 1982.5 | 215 | 244 | 237 |
| 10SDR B30/19A 8SM | G4 | 2054.5 | 215 | 251 | 247 |
| 10SDR B30/20A 8SM | G4 | 2126.5 | 215 | 251 | 257 |

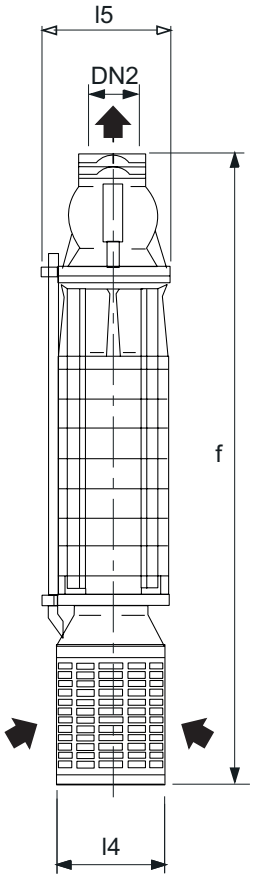


| TYPE | | mm | | | kg |
|---|---|---|---|---|---|
| | DN2 | f | l4 | l5 | Weight |
| 10SDR 35/5A 8SM | G4 | 958.5 | 215 | 244 | 95 |
| 10SDR 35/6A 8SM | G4 | 1030.5 | 215 | 244 | 105 |
| 10SDR 35/7A 8SM | G4 | 1102.5 | 215 | 244 | 115 |
| 10SDR 35/8A 8SM | G4 | 1174.5 | 215 | 244 | 125 |
| 10SDR 35/9A 8SM | G4 | 1246.5 | 215 | 244 | 135 |
| 10SDR 35/10A 8SM | G4 | 1318.5 | 215 | 244 | 145 |
| 10SDR 35/11A 8SM | G4 | 1390.5 | 215 | 244 | 155 |
| 10SDR 35/12A 8SM | G4 | 1462.5 | 215 | 244 | 165 |
| 10SDR 35/13A 8SM | G4 | 1534.5 | 215 | 244 | 175 |
| 10SDR B35/14A 8SM | G4 | 1694.5 | 215 | 244 | 195 |
| 10SDR B35/15A 8SM | G4 | 1766.5 | 215 | 244 | 205 |
| 10SDR B35/16A 8SM | G4 | 1838.5 | 215 | 244 | 215 |
| 10SDR B35/17A 8SM | G4 | 1910.5 | 215 | 244 | 225 |
| 10SDR B35/18A 8SM | G4 | 1982.5 | 215 | 251 | 235 |
| 10SDR B35/19A 8SM | G4 | 2054.5 | 215 | 251 | 245 |
| 10SDR B35/20A 8SM | G4 | 2126.5 | 215 | 251 | 255 |
| 10SDR B35/21A 8SM | G4 | 2198.5 | 215 | 251 | 265 |

**MOTORS TO CONNECT**
STANDARD coupling flange:
(6SM) NEMA 6, 6” motor;
(8SM) NEMA 8, 8”, 10” motor;
(12SM) C 12 Coupling, 12”, 14” motor;

| TYPE | | mm | | | kg |
|---|---|---|---|---|---|
| | DN2 | f | l4 | l5 | Weight |
| 10SDR 40/4B 8SM | G4 | 958.5 | 215 | 244 | 91 |
| 10SDR 40/4A 8SM | G4 | 958.5 | 215 | 244 | 91 |
| 10SDR 40/5I 8SM | G4 | 1048.5 | 215 | 244 | 101 |
| 10SDR 40/6K 8SM | G4 | 1138.5 | 215 | 244 | 111 |
| 10SDR 40/7M 8SM | G4 | 1228.5 | 215 | 244 | 121 |
| 10SDR 40/8AB 8SM | G4 | 1318.5 | 215 | 244 | 131 |
| 10SDR 40/8A 8SM | G4 | 1318.5 | 215 | 244 | 131 |
| 10SDR 40/9A 8SM | G4 | 1408.5 | 215 | 244 | 141 |
| 10SDR 40/10A 8SM | G4 | 1498.5 | 215 | 244 | 151 |
| 10SDR 40/11A 8SM | G4 | 1588.5 | 215 | 244 | 161 |
| 10SDR 40/12A 8SM | G4 | 1678.5 | 215 | 244 | 171 |
| 10SDR B40/13A 8SM | G4 | 1856.5 | 215 | 251 | 189 |
| 10SDR B40/14A 8SM | G4 | 1946.5 | 215 | 251 | 199 |
| 10SDR B40/15A 8SM | G4 | 2036.5 | 215 | 251 | 209 |
| 10SDR B40/16A 8SM | G4 | 2126.5 | 215 | 251 | 219 |
| 10SDR B40/17A 8SM | G4 | 2216.5 | 215 | 251 | 229 |
| 10SDR B40/18A 8SM | G4 | 2306.5 | 215 | 251 | 239 |

# SDS

## Dimensions and weights

| TYPE | | mm | | | | | | | | kg |
|---|---|---|---|---|---|---|---|---|---|---|
| | DN2 | de | dk | f | j4 | l4 | l5 | s | z | Weight |
| 12SDS 42/4A 12SM | 200 | 288 | 260 | 1420 | 221.5 | 290 | 298 | 18 | 8 | 243 |
| 12SDS 42/4A 8SM | 150 | 234 | 206 | 1445.5 | 170.5 | 240 | 265 | 16 | 6 | 243 |
| 12SDS 42/5MN 12SM | 200 | 288 | 260 | 1600 | 221.5 | 290 | 298 | 18 | 8 | 280 |
| 12SDS 42/5A 12SM | 200 | 288 | 260 | 1600 | 221.5 | 290 | 298 | 18 | 8 | 280 |
| 12SDS 42/6P 12SM | 200 | 288 | 260 | 1780 | 221.4 | 290 | 298 | 18 | 8 | 316.5 |
| 12SDS 42/6B 12SM | 200 | 288 | 260 | 1780 | 221.5 | 290 | 298 | 18 | 8 | 316.5 |
| 12SDS 42/6A 12SM | 200 | 288 | 260 | 1780 | 221.4 | 290 | 298 | 18 | 8 | 316.5 |
| 12SDS 42/7M 12SM | 200 | 288 | 260 | 1960 | 221.5 | 290 | 298 | 18 | 8 | 353 |
| 12SDS 42/7A 12SM | 200 | 288 | 260 | 1960 | 221.5 | 290 | 298 | 18 | 8 | 353 |
| 12SDS 42/8Q 12SM | 200 | 288 | 260 | 2140 | 221.5 | 290 | 298 | 18 | 8 | 390 |
| 12SDS 42/8A 12SM | 200 | 288 | 260 | 2140 | 221.5 | 290 | 298 | 18 | 8 | 390 |
| 12SDS 42/9M 12SM | 200 | 288 | 260 | 2320 | 221.5 | 290 | 298 | 18 | 8 | 426 |

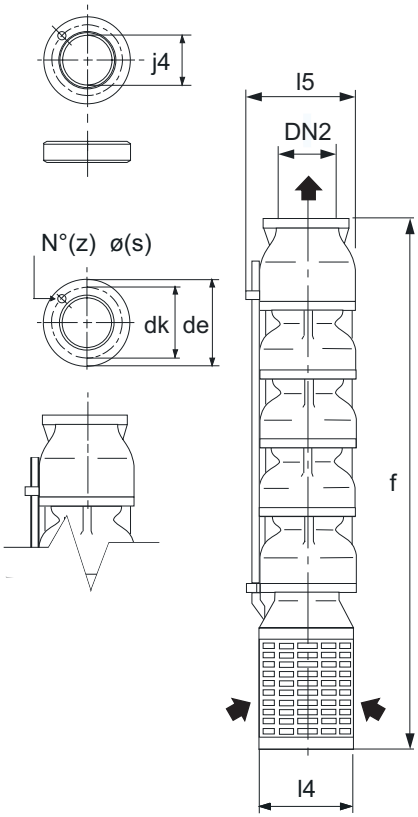


| TYPE | | mm | | | | | | | | kg |
|---|---|---|---|---|---|---|---|---|---|---|
| | DN2 | de | dk | f | j4 | l4 | l5 | s | z | Weight |
| 12SDS 50/1D 6SM | 150 | 234 | 206 | 657 | 170.5 | 240 | 264 | 16 | 6 | 68.5 |
| 12SDS 50/1B 6SM | 150 | 234 | 206 | 657 | 170.5 | 240 | 264 | 16 | 6 | 68.5 |
| 12SDS 50/1A 6SM | 150 | 234 | 206 | 657 | 170.5 | 240 | 264 | 16 | 6 | 68.5 |
| 12SDS 50/2EF 6SM | 150 | 234 | 206 | 832 | 170.5 | 240 | 264 | 16 | 6 | 89.5 |
| 12SDS 50/2DE 6SM | 150 | 234 | 206 | 832 | 170.5 | 240 | 264 | 16 | 6 | 89.5 |
| 12SDS 50/2DE 8SM | 150 | 234 | 206 | 857.5 | 170.5 | 240 | 264 | 16 | 6 | 90.5 |
| 12SDS 50/2BC 6SM | 150 | 234 | 206 | 832 | 170.5 | 240 | 264 | 16 | 6 | 89.5 |
| 12SDS 50/2BC 8SM | 150 | 234 | 206 | 857.5 | 170.5 | 240 | 264 | 16 | 6 | 90.5 |
| 12SDS 50/2A 6SM | 150 | 234 | 206 | 832 | 170.5 | 240 | 264 | 16 | 6 | 89.5 |
| 12SDS 50/2A 8SM | 150 | 234 | 206 | 857.5 | 170.5 | 240 | 264 | 16 | 6 | 90.5 |
| 12SDS 50/3C 8SM | 150 | 234 | 206 | 1032.5 | 170.5 | 240 | 264 | 16 | 6 | 111.5 |
| 12SDS 50/3K 8SM | 150 | 234 | 206 | 1032.5 | 170.5 | 240 | 264 | 16 | 6 | 111.5 |
| 12SDS 50/3A 8SM | 150 | 234 | 206 | 1032.5 | 170.5 | 240 | 264 | 16 | 6 | 111.5 |
| 12SDS 50/4Z 8SM | 150 | 234 | 206 | 1207.5 | 170.5 | 240 | 264 | 16 | 6 | 132.5 |
| 12SDS 50/4A 8SM | 150 | 234 | 206 | 1032.5 | 170.5 | 240 | 264 | 16 | 6 | 132.5 |
| 12SDS 50/5BC 8SM | 150 | 234 | 206 | 1382.5 | 170.5 | 240 | 264 | 16 | 6 | 153.5 |
| 12SDS 50/5A 8SM | 150 | 234 | 206 | 1382.5 | 170.5 | 240 | 264 | 16 | 6 | 153.5 |
| 12SDS 50/6A 8SM | 150 | 234 | 206 | 1557.5 | 170.5 | 240 | 265 | 16 | 6 | 174.5 |
| 12SDS 50/7I 8SM | 150 | 234 | 206 | 1732.5 | 170.5 | 240 | 265 | 16 | 6 | 195.5 |
| 12SDS 50/8M 8SM | 150 | 234 | 206 | 1907.5 | 170.5 | 240 | 265 | 16 | 6 | 216.5 |
| 12SDS 50/8A 12SM | 150 | 234 | 206 | 2031 | 170.5 | 290 | 305 | 16 | 6 | 238.5 |
| 12SDS 50/8A 8SM | 150 | 234 | 206 | 1933 | 170.5 | 240 | 265 | 16 | 6 | 216.5 |
| 12SDS 50/9A 12SM | 150 | 234 | 206 | 2206 | 170.5 | 290 | 305 | 16 | 6 | 259.5 |
| 12SDS 50/10A 12SM | 150 | 234 | 206 | 2381 | 170.5 | 290 | 305 | 16 | 6 | 280.5 |
| 12SDS 50/11A 12SM | 150 | 234 | 206 | 2556 | 170.5 | 290 | 305 | 16 | 6 | 301.5 |
| 12SDS 50/12A 12SM | 150 | 234 | 206 | 2731 | 170.5 | 290 | 305 | 16 | 6 | 322.5 |

**MOTORS TO CONNECT**
STANDARD coupling flange:
(6SM) NEMA 6, 6” motor;
(8SM) NEMA 8, 8”, 10” motor;
(12SM) C 12 Coupling, 12”, 14” motor;

# SDS

## Dimensions and weights

| TYPE | | mm | | | | | | | | kg |
|---|---|---|---|---|---|---|---|---|---|---|
| | DN2 | de | dk | f | j4 | l4 | l5 | s | z | Weight |
| 12SDS 55/1GH 6SM | 150 | 234 | 206 | 657 | 170.5 | 240 | 264 | 16 | 6 | 68.5 |
| 12SDS 55/1EF 6SM | 150 | 234 | 206 | 657 | 170.5 | 240 | 264 | 16 | 6 | 68.5 |
| 12SDS 55/1D 6SM | 150 | 234 | 206 | 657 | 170.5 | 240 | 264 | 16 | 6 | 68.5 |
| 12SDS 55/1B 6SM | 150 | 234 | 206 | 657 | 170.5 | 240 | 264 | 16 | 6 | 68.5 |
| 12SDS 55/1B 8SM | 150 | 234 | 206 | 682.5 | 170.5 | 240 | 264 | 16 | 6 | 69.5 |
| 12SDS 55/2GH 6SM | 150 | 234 | 206 | 832 | 170.5 | 240 | 264 | 16 | 6 | 89.5 |
| 12SDS 55/2GH 8SM | 150 | 234 | 206 | 857.5 | 170.5 | 240 | 264 | 16 | 6 | 90.5 |
| 12SDS 55/2EF 6SM | 150 | 234 | 206 | 832 | 170.5 | 240 | 264 | 16 | 6 | 89.5 |
| 12SDS 55/2EF 8SM | 150 | 234 | 206 | 857.5 | 170.5 | 240 | 264 | 16 | 6 | 90.5 |
| 12SDS 55/2D 6SM | 150 | 234 | 206 | 832 | 170.5 | 240 | 264 | 16 | 6 | 89.5 |
| 12SDS 55/2D 8SM | 150 | 234 | 206 | 857.5 | 170.5 | 240 | 264 | 16 | 6 | 90.5 |
| 12SDS 55/2B 8SM | 150 | 234 | 206 | 857.5 | 170.5 | 240 | 264 | 16 | 6 | 90.5 |
| 12SDS 55/2A 8SM | 150 | 234 | 206 | 857.5 | 170.5 | 240 | 264 | 16 | 6 | 90.5 |
| 12SDS 55/3DE 8SM | 150 | 234 | 206 | 1032.5 | 170.5 | 240 | 264 | 16 | 6 | 111.5 |
| 12SDS 55/3CJ 8SM | 150 | 234 | 206 | 1032.5 | 170.5 | 240 | 264 | 16 | 6 | 111.5 |
| 12SDS 55/3A 8SM | 150 | 234 | 206 | 1032.5 | 170.5 | 240 | 264 | 16 | 6 | 111.5 |
| 12SDS 55/4JF 8SM | 150 | 234 | 206 | 1207.5 | 170.5 | 240 | 264 | 16 | 6 | 132.5 |
| 12SDS 55/4D 8SM | 150 | 234 | 206 | 1207.5 | 170.5 | 240 | 264 | 16 | 6 | 132.5 |
| 12SDS 55/4B 8SM | 150 | 234 | 206 | 1207.5 | 170.5 | 240 | 264 | 16 | 6 | 132.5 |
| 12SDS 55/5D 8SM | 150 | 234 | 206 | 1382.5 | 170.5 | 240 | 264 | 16 | 6 | 148 |
| 12SDS 55/5T 8SM | 150 | 234 | 206 | 1382.5 | 170.5 | 240 | 265 | 16 | 6 | 153 |
| 12SDS 55/6BC 8SM | 150 | 234 | 206 | 1557.5 | 170.5 | 240 | 265 | 16 | 6 | 174 |
| 12SDS 55/6A 8SM | 150 | 234 | 206 | 1557.5 | 170.5 | 240 | 265 | 16 | 6 | 174 |
| 12SDS 55/7K 12SM | 150 | 234 | 206 | 1856 | 170.5 | 290 | 305 | 16 | 6 | 217.5 |
| 12SDS 55/8A 12SM | 150 | 234 | 206 | 2031 | 170.5 | 290 | 305 | 16 | 6 | 238.5 |
| 12SDS 55/9Q 12SM | 150 | 234 | 206 | 2206 | 170.5 | 290 | 340 | 16 | 6 | 259.5 |
| 12SDS 55/9B 12SM | 150 | 234 | 206 | 2206 | 170.5 | 290 | 305 | 16 | 6 | 259.5 |
| 12SDS 55/10A 12SM | 150 | 234 | 206 | 2381 | 170.5 | 290 | 340 | 16 | 6 | 280.5 |

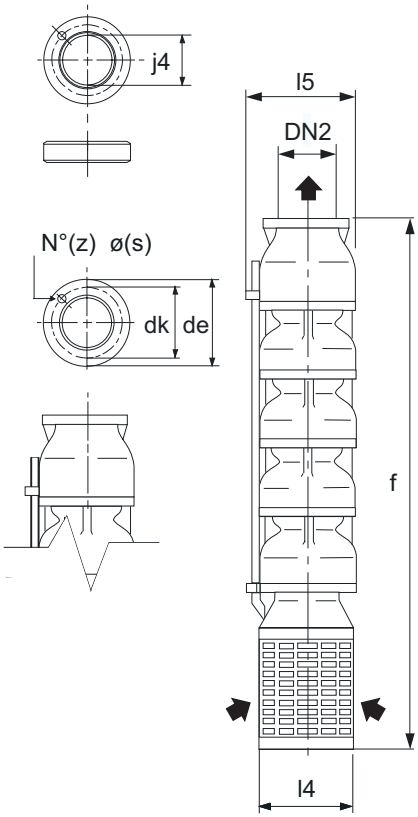


| TYPE | | mm | | | | | | | | kg |
|---|---|---|---|---|---|---|---|---|---|---|
| | DN2 | de | dk | f | j4 | l4 | l5 | s | z | Weight |
| 12SDS 58/1AB 6SM | 150 | 234 | 206 | 685.5 | 170.5 | 240 | 264 | 16 | 6 | 68.5 |
| 12SDS 58/1AB 8SM | 150 | 234 | 206 | 685.5 | 170.5 | 240 | 264 | 16 | 6 | 69.5 |
| 12SDS 58/2BC 8SM | 150 | 234 | 206 | 860.5 | 170.5 | 240 | 264 | 16 | 6 | 90.5 |
| 12SDS 58/2AJ 8SM | 150 | 234 | 206 | 860.5 | 170.5 | 240 | 264 | 16 | 6 | 90.5 |
| 12SDS 58/2A 8SM | 150 | 234 | 206 | 860.5 | 170.5 | 240 | 264 | 16 | 6 | 90.5 |
| 12SDS 58/3W 8SM | 150 | 234 | 206 | 1035.5 | 170.5 | 240 | 264 | 16 | 6 | 111.5 |
| 12SDS 58/3A 8SM | 150 | 234 | 206 | 1035.5 | 170.5 | 240 | 264 | 16 | 6 | 111.5 |
| 12SDS 58/4M 8SM | 150 | 234 | 206 | 1210.5 | 170.5 | 240 | 265 | 16 | 6 | 132.5 |
| 12SDS 58/4A 8SM | 150 | 234 | 206 | 1210.5 | 170.5 | 240 | 265 | 16 | 6 | 132.5 |
| 12SDS 58/5M 12SM | 150 | 234 | 206 | 1506 | 170.5 | 290 | 305 | 16 | 6 | 175.5 |
| 12SDS 58/5M 8SM | 150 | 234 | 206 | 1385.5 | 170.5 | 240 | 265 | 16 | 6 | 153.5 |
| 12SDS 58/5I 8SM | 150 | 234 | 206 | 1385.5 | 170.5 | 240 | 265 | 16 | 6 | 153.5 |
| 12SDS 58/5A 12SM | 150 | 234 | 206 | 1506 | 170.5 | 290 | 305 | 16 | 6 | 175.5 |
| 12SDS 58/6Z 12SM | 150 | 234 | 206 | 1681 | 170.5 | 290 | 305 | 16 | 6 | 196.5 |
| 12SDS 58/7Z 12SM | 150 | 234 | 206 | 1856 | 170.5 | 290 | 305 | 16 | 6 | 217.5 |
| 12SDS 58/7X 12SM | 150 | 234 | 206 | 1856 | 170.5 | 290 | 305 | 16 | 6 | 217.5 |
| 12SDS 58/7A 12SM | 150 | 234 | 206 | 1856 | 170.5 | 290 | 305 | 16 | 6 | 217.5 |
| 12SDS 58/8AB 12SM | 150 | 234 | 206 | 2031 | 170.5 | 290 | 305 | 16 | 6 | 238.5 |

**MOTORS TO CONNECT**
STANDARD coupling flange:
(6SM) NEMA 6, 6” motor;
(8SM) NEMA 8, 8”, 10” motor;
(12SM) C 12 Coupling, 12”, 14” motor;

# SDS

calpeda®

## Dimensions and weights

| TYPE | | mm | | | | | | | | kg |
|---|---|---|---|---|---|---|---|---|---|---|
| | DN2 | de | dk | f | j4 | l4 | l5 | s | z | Weight |
| 14SDS 50/1E 8SM | 200 | 288 | 260 | 1110.5 | 221.5 | 290 | 342 | 18 | 8 | 167 |
| 14SDS 50/1D 8SM | 200 | 288 | 260 | 1110.5 | 221.5 | 290 | 342 | 18 | 8 | 167 |
| 14SDS 50/1C 8SM | 200 | 288 | 260 | 1110.5 | 221.5 | 290 | 342 | 18 | 8 | 167 |
| 14SDS 50/1B 8SM | 200 | 288 | 260 | 1110.5 | 221.5 | 290 | 342 | 18 | 8 | 167 |
| 14SDS 50/1A 8SM | 200 | 288 | 260 | 1110.5 | 221.5 | 290 | 342 | 18 | 8 | 167 |
| 14SDS 50/2E 8SM | 200 | 288 | 260 | 1315.5 | 221.5 | 290 | 342 | 18 | 8 | 206.5 |
| 14SDS 50/2D 8SM | 200 | 288 | 260 | 1315.5 | 221.5 | 290 | 342 | 18 | 8 | 206.5 |
| 14SDS 50/2CD 8SM | 200 | 288 | 260 | 1315.5 | 221.5 | 290 | 342 | 18 | 8 | 206.5 |
| 14SDS 50/2BC 8SM | 200 | 288 | 260 | 1315.5 | 221.5 | 290 | 342 | 18 | 8 | 206.5 |
| 14SDS 50/2AB 8SM | 200 | 288 | 260 | 1315.5 | 221.5 | 290 | 342 | 18 | 8 | 206.5 |
| 14SDS 50/3C 8SM | 200 | 288 | 260 | 1520.5 | 221.5 | 290 | 342 | 18 | 8 | 246 |
| 14SDS 50/3B 8SM | 200 | 288 | 260 | 1520.5 | 221.5 | 290 | 342 | 18 | 8 | 246 |
| 14SDS 50/3A 8SM | 200 | 288 | 260 | 1520.5 | 221.5 | 290 | 342 | 18 | 8 | 246 |
| 14SDS 50/3A 12SM | 200 | 288 | 260 | 1495 | 221.5 | 290 | 342 | 18 | 8 | 260 |
| 14SDS 50/4BC 8SM | 200 | 288 | 260 | 1725.5 | 221.5 | 290 | 342 | 18 | 8 | 299.5 |
| 14SDS 50/4BC 12SM | 200 | 288 | 260 | 1700 | 221.5 | 290 | 342 | 18 | 8 | 299.5 |
| 14SDS 50/4I 12SM | 200 | 288 | 260 | 1700 | 221.5 | 290 | 342 | 18 | 8 | 299.5 |
| 14SDS 50/5JC 12SM | 200 | 288 | 260 | 1905 | 221.5 | 290 | 342 | 18 | 8 | 339 |
| 14SDS 50/5I 12SM | 200 | 288 | 260 | 1905 | 221.5 | 290 | 342 | 18 | 8 | 339 |
| 14SDS 50/6W 12SM | 200 | 288 | 260 | 2110 | 221.5 | 290 | 342 | 18 | 8 | 378.5 |
| 14SDS 50/6I 12SM | 200 | 288 | 260 | 2110 | 221.5 | 290 | 342 | 18 | 8 | 378.5 |
| 14SDS 50/7Q 12SM | 200 | 288 | 260 | 2315 | 221.5 | 290 | 342 | 18 | 8 | 418 |

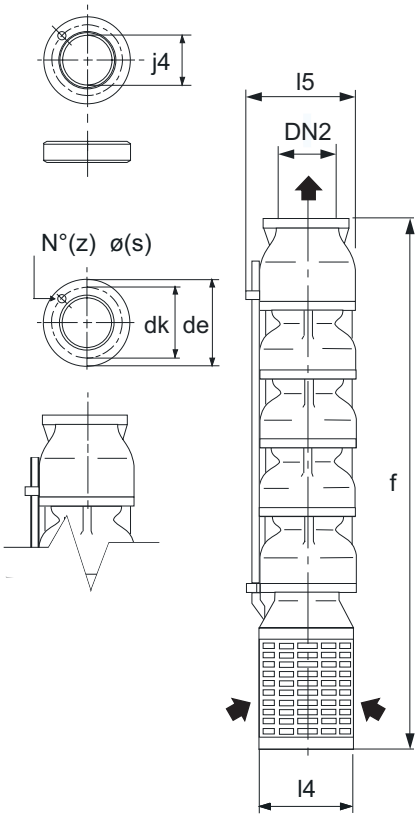


| TYPE | | mm | | | | | | | | kg |
|---|---|---|---|---|---|---|---|---|---|---|
| | DN2 | de | dk | f | j4 | l4 | l5 | s | z | Weight |
| 14SDS 55/1FG 8SM | 230 | 326 | 293 | 1160.5 | 247 | 338 | 342 | 20 | 8 | 189 |
| 14SDS 55/1EF 8SM | 230 | 326 | 293 | 1160.5 | 247 | 338 | 342 | 20 | 8 | 189 |
| 14SDS 55/1DE 8SM | 230 | 326 | 293 | 1160.5 | 247 | 338 | 342 | 20 | 8 | 189 |
| 14SDS 55/1CJ 8SM | 230 | 326 | 293 | 1160.5 | 247 | 338 | 342 | 20 | 8 | 189 |
| 14SDS 55/1C 8SM | 230 | 326 | 293 | 1160.5 | 247 | 338 | 342 | 20 | 8 | 189 |
| 14SDS 55/1B 8SM | 230 | 326 | 293 | 1160.5 | 247 | 338 | 342 | 20 | 8 | 189 |
| 14SDS 55/1A 8SM | 230 | 326 | 293 | 1160.5 | 247 | 338 | 342 | 20 | 8 | 189 |
| 14SDS 55/2JF 8SM | 230 | 326 | 293 | 1365.5 | 247 | 338 | 342 | 20 | 8 | 228 |
| 14SDS 55/2JE 8SM | 230 | 326 | 293 | 1365.5 | 247 | 338 | 342 | 20 | 8 | 228 |
| 14SDS 55/2C 8SM | 230 | 326 | 293 | 1365.5 | 247 | 338 | 342 | 20 | 8 | 228 |
| 14SDS 55/2JC 8SM | 230 | 326 | 293 | 1365.5 | 247 | 338 | 342 | 20 | 8 | 228 |
| 14SDS 55/2AB 8SM | 230 | 326 | 293 | 1365.5 | 247 | 338 | 342 | 20 | 8 | 228 |
| 14SDS 55/2AB 12SM | 230 | 326 | 293 | 1340 | 247 | 338 | 342 | 20 | 8 | 242 |
| 14SDS 55/3D 8SM | 230 | 326 | 293 | 1570.5 | 247 | 338 | 342 | 20 | 8 | 267 |
| 14SDS 55/3D 12SM | 230 | 326 | 293 | 1545 | 247 | 338 | 342 | 20 | 8 | 281 |
| 14SDS 55/3JD 12SM | 230 | 326 | 293 | 1545 | 247 | 338 | 342 | 20 | 8 | 281 |
| 14SDS 55/3BC 12SM | 230 | 326 | 293 | 1545 | 247 | 338 | 342 | 20 | 8 | 281 |
| 14SDS 55/3B 12SM | 230 | 326 | 293 | 1545 | 247 | 338 | 342 | 20 | 8 | 281 |
| 14SDS 55/3A 12SM | 230 | 326 | 293 | 1545 | 247 | 338 | 342 | 20 | 8 | 281 |
| 14SDS E55/4BJ 12SM | 230 | 326 | 293 | 1750 | 247 | 338 | 342 | 20 | 8 | 314 |
| 14SDS E55/4I 12SM | 230 | 326 | 293 | 1750 | 247 | 338 | 342 | 20 | 8 | 314 |
| 14SDS E55/4B 12SM | 230 | 326 | 293 | 1750 | 247 | 338 | 342 | 20 | 8 | 314 |
| 14SDS E55/5C 12SM | 230 | 326 | 293 | 1955 | 247 | 338 | 342 | 20 | 8 | 354 |
| 14SDS E55/5BC 12SM | 230 | 326 | 293 | 1955 | 247 | 338 | 342 | 20 | 8 | 354 |

**MOTORS TO CONNECT**
STANDARD coupling flange:
(6SM) NEMA 6, 6” motor;
(8SM) NEMA 8, 8”, 10” motor;
(12SM) C 12 Coupling, 12”, 14” motor;

# SDS

## Dimensions and weights

| TYPE | | mm | | | | | | | | kg |
|---|---|---|---|---|---|---|---|---|---|---|
| | DN2 | de | dk | f | j4 | l4 | l5 | s | z | Weight |
| 14SDS 64/1L 8SM | 230 | 326 | 293 | 1017.5 | 247 | 338 | 352 | 20 | 8 | 180 |
| 14SDS 64/1H 8SM | 230 | 326 | 293 | 1017.5 | 247 | 338 | 352 | 20 | 8 | 180 |
| 14SDS 64/1G 8SM | 230 | 326 | 293 | 1017.5 | 247 | 338 | 352 | 20 | 8 | 180 |
| 14SDS 64/1F 8SM | 230 | 326 | 293 | 1017.5 | 247 | 338 | 352 | 20 | 8 | 180 |
| 14SDS 64/1D 8SM | 230 | 326 | 293 | 1017.5 | 247 | 338 | 352 | 20 | 8 | 180 |
| 14SDS 64/1B 8SM | 230 | 326 | 293 | 1017.5 | 247 | 338 | 352 | 20 | 8 | 180 |
| 14SDS 64/1A 8SM | 230 | 326 | 293 | 1017.5 | 247 | 338 | 352 | 20 | 8 | 180 |
| 14SDS 64/2G 8SM | 230 | 326 | 293 | 1232.5 | 247 | 338 | 352 | 20 | 8 | 232 |
| 14SDS 64/2EF 8SM | 230 | 326 | 293 | 1232.5 | 247 | 338 | 352 | 20 | 8 | 232 |
| 14SDS 64/2DE 8SM | 230 | 326 | 293 | 1232.5 | 247 | 338 | 352 | 20 | 8 | 232 |
| 14SDS 64/2DE 12SM | 230 | 326 | 293 | 1180 | 247 | 338 | 352 | 20 | 8 | 245 |
| 14SDS 64/2C 12SM | 230 | 326 | 293 | 1180 | 247 | 338 | 352 | 20 | 8 | 245 |
| 14SDS 64/2A 12SM | 230 | 326 | 293 | 1180 | 247 | 338 | 352 | 20 | 8 | 245 |
| 14SDS 64/3JF 12SM | 230 | 326 | 293 | 1395 | 247 | 338 | 352 | 20 | 8 | 297 |
| 14SDS 64/3JD 12SM | 230 | 326 | 293 | 1395 | 247 | 338 | 352 | 20 | 8 | 297 |
| 14SDS 64/3B 12SM | 230 | 326 | 293 | 1395 | 247 | 338 | 352 | 20 | 8 | 297 |
| 14SDS 64/3A 12SM | 230 | 326 | 293 | 1395 | 247 | 338 | 352 | 20 | 8 | 297 |
| 14SDS 64/4CD 12SM | 230 | 326 | 293 | 1610 | 247 | 338 | 352 | 20 | 8 | 349 |

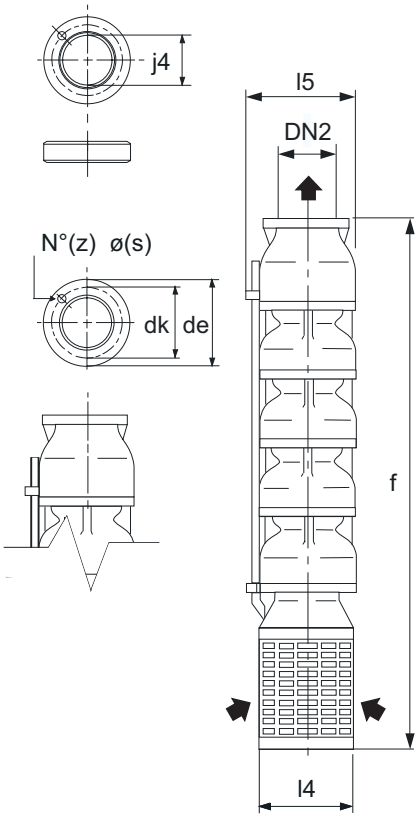


| TYPE | | mm | | | | | | | | kg |
|---|---|---|---|---|---|---|---|---|---|---|
| | DN2 | de | dk | f | j4 | l4 | l5 | s | z | Weight |
| 18SDS 64/1L 8SM | 230 | 326 | 293 | 1200.5 | 247 | 384 | 435 | 20 | 8 | 260 |
| 18SDS 64/1H 8SM | 230 | 326 | 293 | 1200.5 | 247 | 384 | 435 | 20 | 8 | 260 |
| 18SDS 64/1G 8SM | 230 | 326 | 293 | 1200.5 | 247 | 384 | 435 | 20 | 8 | 260 |
| 18SDS 64/1F 8SM | 230 | 326 | 293 | 1200.5 | 247 | 384 | 435 | 20 | 8 | 260 |
| 18SDS 64/1D 8SM | 230 | 326 | 293 | 1200.5 | 247 | 384 | 445 | 20 | 8 | 260 |
| 18SDS 64/1B 8SM | 230 | 326 | 293 | 1200.5 | 247 | 384 | 435 | 20 | 8 | 260 |
| 18SDS 64/1A 8SM | 230 | 326 | 293 | 1200.5 | 247 | 384 | 435 | 20 | 8 | 241 |
| 18SDS 64/2G 8SM | 230 | 326 | 293 | 1470.5 | 247 | 384 | 435 | 20 | 8 | 336 |
| 18SDS 64/2EF 8SM | 230 | 326 | 293 | 1470.5 | 247 | 384 | 435 | 20 | 8 | 336 |
| 18SDS 64/2DE 8SM | 230 | 326 | 293 | 1470.5 | 247 | 384 | 435 | 20 | 8 | 336 |
| 18SDS 64/2DE 12SM | 230 | 326 | 293 | 1445 | 247 | 384 | 435 | 20 | 8 | 353 |
| 18SDS 64/2C 12SM | 230 | 326 | 293 | 1445 | 247 | 384 | 435 | 20 | 8 | 353 |
| 18SDS 64/2A 12SM | 230 | 326 | 293 | 1445 | 247 | 384 | 435 | 20 | 8 | 353 |
| 18SDS 64/3JF 12SM | 230 | 326 | 293 | 1715 | 247 | 384 | 435 | 20 | 8 | 429 |
| 18SDS 64/3B 12SM | 230 | 326 | 293 | 1715 | 247 | 384 | 435 | 20 | 8 | 429 |
| 18SDS 64/3A 12SM | 230 | 326 | 293 | 1715 | 247 | 384 | 435 | 20 | 8 | 429 |
| 18SDS 64/4CD 12SM | 230 | 326 | 293 | 1985 | 247 | 384 | 435 | 20 | 8 | 505 |

**MOTORS TO CONNECT**
STANDARD coupling flange:
(6SM) NEMA 6, 6” motor;
(8SM) NEMA 8, 8”, 10” motor;
(12SM) C 12 Coupling, 12”, 14” motor;

# SDS

## Dimensions and weights

| TYPE | | mm | | | kg |
|---|---|---|---|---|---|
| | DN2 | f | l4 | l5 | Weight |
| I-6SDR 30/9A 6SM | G2 1/2 | 747 | 141 | 148 | 26.8 |
| I-6SDR 30/13A 6SM | G2 1/2 | 927 | 141 | 148 | 34.1 |
| I-6SDR 30/18A 6SM | G2 1/2 | 1152 | 141 | 148 | 43.3 |
| I-6SDR 30/22A 6SM | G2 1/2 | 1332 | 141 | 148 | 50.7 |
| I-6SDR 30/26A 6SM | G2 1/2 | 1512 | 141 | 148 | 58 |
| I-6SDR 30/31A 6SM | G2 1/2 | 1737 | 141 | 148 | 67.2 |
| I-6SDR 30/36A 6SM | G2 1/2 | 1962 | 141 | 148 | 76.4 |
| I-6SDR 30/40A 6SM | G2 1/2 | 2142 | 141 | 148 | 83.8 |
| I-6SDR 30/45A 6SM | G2 1/2 | 2367 | 141 | 148 | 93 |
| I-6SDR 30/49A 6SM | G2 1/2 | 2547 | 141 | 148 | 100.4 |
| I-6SDR 30/53A 6SM | G2 1/2 | 2727 | 141 | 148 | 107.7 |
| I-6SDR 30/56A 6SM | G2 1/2 | 2862 | 141 | 148 | 113.2 |
| I-6SDR 30/60A 6SM | G2 1/2 | 3042 | 141 | 148 | 120.6 |

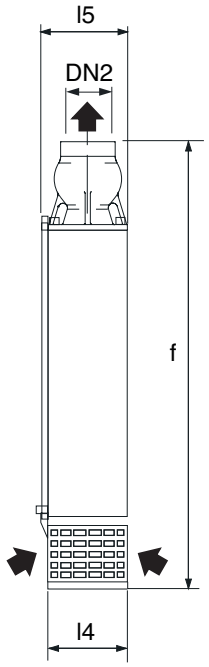


| TYPE | | mm | | | kg |
|---|---|---|---|---|---|
| | DN2 | f | l4 | l5 | Weight |
| I-6SDR 37/7A 6SM | G2 1/2 | 657 | 141 | 148 | 22.5 |
| I-6SDR 37/9A 6SM | G2 1/2 | 747 | 141 | 148 | 26.1 |
| I-6SDR 37/11A 6SM | G2 1/2 | 837 | 141 | 148 | 29.6 |
| I-6SDR 37/13A 6SM | G2 1/2 | 927 | 141 | 148 | 33.2 |
| I-6SDR 37/16A 6SM | G2 1/2 | 1062 | 141 | 148 | 38.5 |
| I-6SDR 37/19A 6SM | G2 1/2 | 1197 | 141 | 148 | 43.8 |
| I-6SDR 37/22A 6SM | G2 1/2 | 1332 | 141 | 148 | 49.1 |
| I-6SDR 37/26A 6SM | G2 1/2 | 1512 | 141 | 148 | 56.2 |
| I-6SDR 37/29A 6SM | G2 1/2 | 1647 | 141 | 148 | 61.5 |
| I-6SDR 37/32A 6SM | G2 1/2 | 1782 | 141 | 148 | 66.8 |
| I-6SDR 37/35A 6SM | G2 1/2 | 1917 | 141 | 148 | 72.1 |
| I-6SDR 37/38A 6SM | G2 1/2 | 2052 | 141 | 148 | 77.4 |
| I-6SDR 37/41A 6SM | G2 1/2 | 2187 | 141 | 148 | 82.7 |
| I-6SDR 37/45A 6SM | G2 1/2 | 2367 | 141 | 148 | 89.8 |
| I-6SDR 37/48A 6SM | G2 1/2 | 2502 | 141 | 148 | 95.1 |
| I-6SDR 37/52A 6SM | G2 1/2 | 2682 | 141 | 148 | 102.2 |
| I-6SDR 37/56A 6SM | G2 1/2 | 2862 | 141 | 148 | 109.3 |
| I-6SDR 37/60A 6SM | G2 1/2 | 3042 | 141 | 148 | 116.4 |

**MOTORS TO CONNECT**
STANDARD coupling flange:
(6SM) NEMA 6, 6” motor

| TYPE | | mm | | | kg |
|---|---|---|---|---|---|
| | DN2 | f | l4 | l5 | Weight |
| I-6SDR 47/4I 6SM | G3 | 587 | 141 | 148 | 17.3 |
| I-6SDR 47/5A 6SM | G3 | 644 | 141 | 148 | 19.5 |
| I-6SDR 47/7A 6SM | G3 | 758 | 141 | 148 | 23.9 |
| I-6SDR 47/9I 6SM | G3 | 872 | 141 | 148 | 28.3 |
| I-6SDR 47/10A 6SM | G3 | 929 | 141 | 148 | 30.5 |
| I-6SDR 47/12A 6SM | G3 | 1043 | 141 | 148 | 34.9 |
| I-6SDR 47/14A 6SM | G3 | 1157 | 141 | 148 | 39.3 |
| I-6SDR 47/17A 6SM | G3 | 1328 | 141 | 148 | 45.9 |
| I-6SDR 47/21A 6SM | G3 | 1556 | 141 | 148 | 54.7 |
| I-6SDR 47/25A 6SM | G3 | 1784 | 141 | 148 | 63.5 |
| I-6SDR 47/28A 6SM | G3 | 1955 | 141 | 148 | 70.1 |
| I-6SDR 47/31A 6SM | G3 | 2126 | 141 | 148 | 76.7 |
| I-6SDR 47/35A 6SM | G3 | 2354 | 141 | 148 | 85.5 |

# SDS

calpeda

## Dimensions and weights

| TYPE | | mm | | | kg |
|---|---|---|---|---|---|
| | DN2 | f | l4 | l5 | Weight |
| I-6SDS 50/3A 6SM | G3 | 727 | 141 | 150 | 25.5 |
| I-6SDS 50/4A 6SM | G3 | 842 | 141 | 150 | 30 |
| I-6SDS 50/6M 6SM | G3 | 1072 | 141 | 150 | 44 |
| I-6SDS 50/7I 6SM | G3 | 1187 | 141 | 150 | 48.5 |
| I-6SDS 50/8A 6SM | G3 | 1302 | 141 | 150 | 54 |
| I-6SDS 50/9A 6SM | G3 | 1417 | 141 | 150 | 58.5 |
| I-6SDS 50/11A 6SM | G3 | 1647 | 141 | 150 | 69 |
| I-6SDS 50/14A 6SM | G3 | 1992 | 141 | 150 | 81 |
| I-6SDS 50/16A 6SM | G3 | 2222 | 141 | 150 | 90 |
| I-6SDS 50/19A 6SM | G3 | 2567 | 141 | 150 | 107 |
| I-6SDS 50/22A 6SM | G3 | 2912 | 141 | 150 | 124 |
| I-6SDS 50/28A 6SM | G3 | 3602 | 141 | 150 | 152.5 |

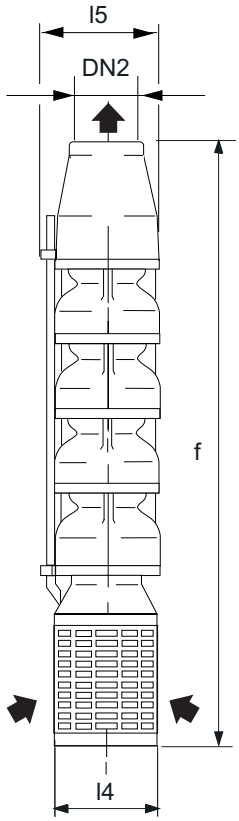


| TYPE | | mm | | | kg |
|---|---|---|---|---|---|
| | DN2 | f | l4 | l5 | Weight |
| I-6SDS 55/2I 6SM | G3 | 612 | 141 | 150 | 21 |
| I-6SDS 55/3P 6SM | G3 | 727 | 141 | 150 | 28.5 |
| I-6SDS 55/4P 6SM | G3 | 842 | 141 | 150 | 33 |
| I-6SDS 55/5Q 6SM | G3 | 957 | 141 | 150 | 37.5 |
| I-6SDS 55/6Z 6SM | G3 | 1072 | 141 | 150 | 40 |
| I-6SDS 55/7Z 6SM | G3 | 1187 | 141 | 150 | 35.5 |
| I-6SDS 55/8S 6SM | G3 | 1302 | 141 | 150 | 52 |
| I-6SDS 55/9A 6SM | G3 | 1417 | 141 | 150 | 56.5 |
| I-6SDS 55/11M 6SM | G3 | 1647 | 141 | 150 | 65 |
| I-6SDS 55/13M 6SM | G3 | 1877 | 141 | 150 | 74 |
| I-6SDS 55/15M 6SM | G3 | 2107 | 141 | 150 | 84 |
| I-6SDS 55/18A 6SM | G3 | 2452 | 141 | 150 | 101.5 |
| I-6SDS 55/21A 6SM | G3 | 2797 | 141 | 150 | 124 |

**MOTORS TO CONNECT**
STANDARD coupling flange:
(6SM) NEMA 6, 6” motor;
(8SM) NEMA 8, 8”, 10” motor;
(12SM) C 12 Coupling, 12”, 14” motor;

| TYPE | | mm | | | kg |
|---|---|---|---|---|---|
| | DN2 | f | l4 | l5 | Weight |
| I-6SDS 64/2I 6SM | G4 | 612 | 141 | 150 | 26 |
| I-6SDS 64/3K 6SM | G4 | 727 | 141 | 150 | 29.5 |
| I-6SDS 64/4K 6SM | G4 | 842 | 141 | 150 | 35 |
| I-6SDS 64/5M 6SM | G4 | 957 | 141 | 150 | 35.5 |
| I-6SDS 64/6M 6SM | G4 | 1072 | 141 | 150 | 38 |
| I-6SDS 64/7MN 6SM | G4 | 1187 | 141 | 150 | 44 |
| I-6SDS 64/7A 6SM | G4 | 1187 | 141 | 150 | 49 |
| I-6SDS 64/9A 6SM | G4 | 1417 | 141 | 150 | 73.3 |
| I-6SDS 64/11K 6SM | G4 | 1647 | 141 | 150 | 62 |
| I-6SDS 64/13K 6SM | G4 | 1877 | 141 | 150 | 76 |
| I-6SDS 64/15K 6SM | G4 | 2107 | 141 | 150 | 117 |
| I-6SDS 64/18A 6SM | G4 | 2452 | 141 | 150 | 92 |
| I-6SDS 64/21A 6SM | G4 | 2797 | 141 | 150 | 124 |

# SDS

calpeda

## Dimensions and weights

| TYPE | | mm | | | kg |
|---|---|---|---|---|---|
| | DN2 | f | l4 | l5 | Weight |
| I-8SDS 65/1D 6SM | G5 | 560 | 192 | 203 | 24.4 |
| I-8SDS 65/1A 6SM | G5 | 560 | 192 | 203 | 24.4 |
| I-8SDS 65/2T 6SM | G5 | 695 | 192 | 203 | 32.5 |
| I-8SDS 65/2C 6SM | G5 | 695 | 192 | 203 | 32.5 |
| I-8SDS 65/2A 6SM | G5 | 695 | 192 | 203 | 32.5 |
| I-8SDS 65/3E 6SM | G5 | 830 | 192 | 203 | 40.7 |
| I-8SDS 65/3JD 6SM | G5 | 830 | 192 | 203 | 40.7 |
| I-8SDS 65/3K 6SM | G5 | 830 | 192 | 203 | 40.7 |
| I-8SDS 65/4JC 6SM | G5 | 965 | 192 | 203 | 48.8 |
| I-8SDS 65/4A 6SM | G5 | 965 | 192 | 203 | 48.8 |
| I-8SDS 65/5KC 6SM | G5 | 1100 | 192 | 203 | 57 |
| I-8SDS 65/5A 6SM | G5 | 1100 | 192 | 203 | 57 |
| I-8SDS 65/6U 6SM | G5 | 1235 | 192 | 203 | 65.1 |
| I-8SDS 65/6U 8SM | G5 | 1260.5 | 192 | 203 | 65.1 |
| I-8SDS 65/6C 6SM | G5 | 1235 | 192 | 203 | 65.1 |
| I-8SDS 65/6C 8SM | G5 | 1260.5 | 192 | 203 | 65.1 |
| I-8SDS 65/7A 6SM | G5 | 1370 | 192 | 203 | 73.3 |
| I-8SDS 65/7A 8SM | G5 | 1395.5 | 192 | 203 | 73.3 |
| I-8SDS 65/9T 6SM | G5 | 1640 | 192 | 203 | 89.6 |
| I-8SDS 65/9T 8SM | G5 | 1665.5 | 192 | 203 | 89.6 |
| I-8SDS 65/10Z 8SM | G5 | 1800.5 | 192 | 203 | 97.7 |
| I-8SDS 65/11A 8SM | G5 | 1935.5 | 192 | 203 | 105.9 |
| I-8SDS 65/12A 8SM | G5 | 2070.5 | 192 | 203 | 114 |
| I-8SDS 65/14A 8SM | G5 | 2340.5 | 192 | 203 | 130.3 |
| I-8SDS 65/16A 8SM | G5 | 2610.5 | 192 | 203 | 146.6 |
| I-8SDS 65/17A 8SM | G5 | 2745.5 | 192 | 203 | 154.8 |

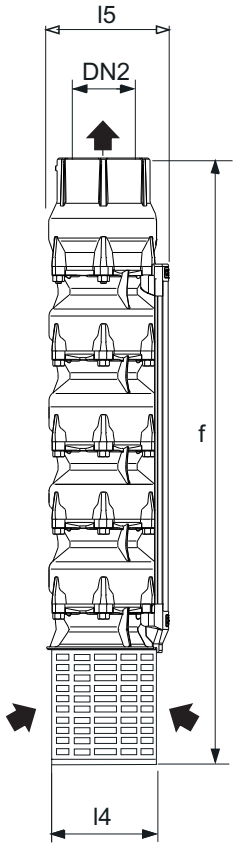


| TYPE | | mm | | | kg |
|---|---|---|---|---|---|
| | DN2 | f | l4 | l5 | Weight |
| I-8SDS 95/1C 6SM | G5 | 565 | 192 | 203 | 25.8 |
| I-8SDS 95/1A 6SM | G5 | 565 | 192 | 203 | 25.8 |
| I-8SDS 95/2F 6SM | G5 | 705 | 192 | 203 | 34 |
| I-8SDS 95/2DF 6SM | G5 | 705 | 192 | 203 | 34 |
| I-8SDS 95/2D 6SM | G5 | 705 | 192 | 203 | 34 |
| I-8SDS 95/2C 6SM | G5 | 705 | 192 | 203 | 34 |
| I-8SDS 95/2A 6SM | G5 | 705 | 192 | 203 | 34 |
| I-8SDS 95/3DJ 6SM | G5 | 845 | 192 | 203 | 42.2 |
| I-8SDS 95/3C 6SM | G5 | 845 | 192 | 203 | 42.2 |
| I-8SDS 95/3A 6SM | G5 | 845 | 192 | 203 | 42.2 |
| I-8SDS 95/4D 6SM | G5 | 985 | 192 | 203 | 50.4 |
| I-8SDS 95/4C 6SM | G5 | 985 | 192 | 203 | 50.4 |
| I-8SDS 95/4C 8SM | G5 | 1010.5 | 192 | 203 | 50.4 |
| I-8SDS 95/4A 6SM | G5 | 985 | 192 | 203 | 50.4 |
| I-8SDS 95/4A 8SM | G5 | 1010.5 | 192 | 203 | 50.4 |
| I-8SDS 95/5KC 6SM | G5 | 1125 | 192 | 203 | 58.6 |
| I-8SDS 95/5KC 8SM | G5 | 1150.5 | 192 | 203 | 58.6 |
| I-8SDS 95/5A 6SM | G5 | 1125 | 192 | 203 | 58.6 |
| I-8SDS 95/5A 8SM | G5 | 1150.5 | 192 | 203 | 58.6 |
| I-8SDS 95/6QC 6SM | G5 | 1125 | 192 | 203 | 66.8 |
| I-8SDS 95/6QC 8SM | G5 | 1290.5 | 192 | 203 | 66.8 |
| I-8SDS 95/7ZC 8SM | G5 | 1430.5 | 192 | 203 | 75 |
| I-8SDS 95/7Z 8SM | G5 | 1430.5 | 192 | 203 | 75 |
| I-8SDS 95/8Z 8SM | G5 | 1570.5 | 192 | 203 | 83.2 |
| I-8SDS 95/10XC 8SM | G5 | 1850.5 | 192 | 203 | 99.6 |
| I-8SDS 95/10A 8SM | G5 | 1850.5 | 192 | 203 | 99.6 |
| I-8SDS 95/12C 8SM | G5 | 2130.5 | 192 | 203 | 116 |

**MOTORS TO CONNECT**
STANDARD coupling flange:
(6SM) NEMA 6, 6” motor;
(8SM) NEMA 8, 8”, 10” motor;
(12SM) C 12 Coupling, 12”, 14” motor;

# SDS

calpeda

## Dimensions and weights

| TYPE | | mm | | | kg |
|---|---|---|---|---|---|
| | DN2 | f | l4 | l5 | Weight |
| I-8SDS 135/1F 6SM | G5 | 565 | 192 | 203 | 24.8 |
| I-8SDS 135/1D 6SM | G5 | 565 | 192 | 203 | 24.8 |
| I-8SDS 135/1B 6SM | G5 | 565 | 192 | 203 | 24.8 |
| I-8SDS 135/2G 6SM | G5 | 705 | 192 | 203 | 32.5 |
| I-8SDS 135/2F 6SM | G5 | 705 | 192 | 203 | 32.5 |
| I-8SDS 135/2E 6SM | G5 | 705 | 192 | 203 | 32.5 |
| I-8SDS 135/2D 6SM | G5 | 705 | 192 | 203 | 32.5 |
| I-8SDS 135/2B 6SM | G5 | 705 | 192 | 203 | 32.5 |
| I-8SDS 135/3E 6SM | G5 | 845 | 192 | 203 | 40.2 |
| I-8SDS 135/3D 6SM | G5 | 845 | 192 | 203 | 40.2 |
| I-8SDS 135/3B 6SM | G5 | 845 | 192 | 203 | 40.2 |
| I-8SDS 135/4D 6SM | G5 | 985 | 192 | 203 | 47.9 |
| I-8SDS 135/4D 8SM | G5 | 1010.5 | 192 | 203 | 47.9 |
| I-8SDS 135/4C 6SM | G5 | 985 | 192 | 203 | 47.9 |
| I-8SDS 135/4C 8SM | G5 | 1010.5 | 192 | 203 | 47.9 |
| I-8SDS 135/5D 6SM | G5 | 1125 | 192 | 203 | 55.6 |
| I-8SDS 135/5D 8SM | G5 | 1150.5 | 192 | 203 | 55.6 |
| I-8SDS 135/5B 6SM | G5 | 1125 | 192 | 203 | 55.6 |
| I-8SDS 135/5B 8SM | G5 | 1150.5 | 192 | 203 | 55.6 |
| I-8SDS 135/6C 8SM | G5 | 1290.5 | 192 | 203 | 63.3 |
| I-8SDS 135/7C 8SM | G5 | 1430.5 | 192 | 203 | 71 |
| I-8SDS 135/7A 8SM | G5 | 1430.5 | 192 | 203 | 71 |
| I-8SDS 135/8C 8SM | G5 | 1570.5 | 192 | 203 | 78.7 |
| I-8SDS 135/8A 8SM | G5 | 1570.5 | 192 | 203 | 78.7 |
| I-8SDS 135/9C 8SM | G5 | 1710.5 | 192 | 203 | 86.4 |
| I-8SDS 135/10C 8SM | G5 | 1850.5 | 192 | 203 | 94.1 |
| I-8SDS 135/11C 8SM | G5 | 1990.5 | 192 | 203 | 101.8 |

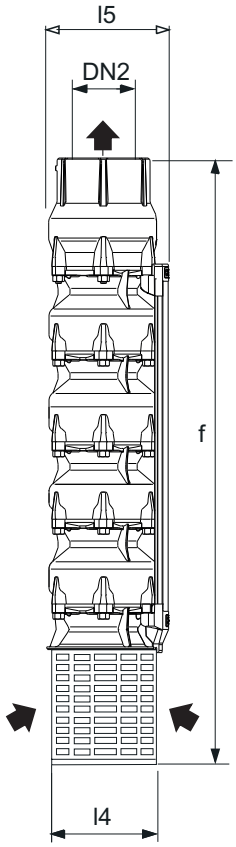


| TYPE | | mm | | | kg |
|---|---|---|---|---|---|
| | DN2 | f | l4 | l5 | Weight |
| I-10SDS 200/1F 6SM | G6 | 714 | 235 | 250,5 | 63 |
| I-10SDS 200/1E 6SM | G6 | 714 | 235 | 250,5 | 63 |
| I-10SDS 200/1DE 6SM | G6 | 714 | 235 | 250,5 | 63.5 |
| I-10SDS 200/1D 6SM | G6 | 714 | 235 | 250,5 | 63.5 |
| I-10SDS 200/1C 6SM | G6 | 714 | 235 | 250,5 | 63.5 |
| I-10SDS 200/1B 6SM | G6 | 714 | 235 | 250,5 | 64 |
| I-10SDS 200/2E 6SM | G6 | 889 | 235 | 250,5 | 79 |
| I-10SDS 200/2DE 6SM | G6 | 889 | 235 | 250,5 | 79 |
| I-10SDS 200/2DE 8SM | G6 | 914.5 | 235 | 251 | 79 |
| I-10SDS 200/2CD 6SM | G6 | 889 | 235 | 250,5 | 79.5 |
| I-10SDS 200/2CD 8SM | G6 | 914.5 | 235 | 251 | 79.5 |
| I-10SDS 200/2BC 6SM | G6 | 889 | 235 | 250,5 | 80 |
| I-10SDS 200/2BC 8SM | G6 | 914.5 | 235 | 251 | 80 |
| I-10SDS 200/2AB 8SM | G6 | 914.5 | 235 | 251 | 80.5 |
| I-10SDS 200/3D 8SM | G6 | 1089.5 | 235 | 251 | 95 |
| I-10SDS 200/3CD 8SM | G6 | 1089.5 | 235 | 251 | 95.5 |
| I-10SDS 200/3BC 8SM | G6 | 1089.5 | 235 | 251 | 96.5 |
| I-10SDS 200/3AB 8SM | G6 | 1089.5 | 235 | 251 | 97 |
| I-10SDS 200/4D 8SM | G6 | 1264.5 | 235 | 251 | 111.5 |
| I-10SDS 200/4BC 8SM | G6 | 1264.5 | 235 | 251 | 112.5 |
| I-10SDS 200/4A 8SM | G6 | 1264.5 | 235 | 251 | 114 |
| I-10SDS 200/5CD 8SM | G6 | 1439.5 | 235 | 251 | 128 |
| I-10SDS 200/5AB 8SM | G6 | 1439.5 | 235 | 254 | 130 |
| I-10SDS 200/6CD 8SM | G6 | 1614.5 | 235 | 251 | 144 |
| I-10SDS 200/6BC 8SM | G6 | 1614.5 | 235 | 254 | 145 |
| I-10SDS 200/6B 8SM | G6 | 1614.5 | 235 | 254 | 144.5 |
| I-10SDS 200/7C 8SM | G6 | 1789.5 | 235 | 254 | 160 |
| I-10SDS 200/7AB 8SM | G6 | 1789.5 | 235 | 259 | 163 |
| I-10SDS 200/8C 8SM | G6 | 1964.5 | 235 | 259 | 176 |
| I-10SDS 200/8C 12SM | G6 | 2085 | 235 | 290 | 190.5 |
| I-10SDS 200/8B 8SM | G6 | 1964.5 | 235 | 259 | 176.5 |
| I-10SDS 200/8A 12SM | G6 | 2085 | 235 | 290 | 193.5 |
| I-10SDS 200/9C 12SM | G6 | 2260 | 235 | 290 | 206.5 |
| I-10SDS 200/9A 12SM | G6 | 2260 | 235 | 290 | 210 |
| I-10SDS 200/10A 12SM | G6 | 2435 | 235 | 340 | 227 |
| I-10SDS 200/11B 12SM | G6 | 2610 | 235 | 340 | 243.5 |
| I-10SDS 200/11A 12SM | G6 | 2610 | 235 | 290 | 243.5 |
| I-10SDS 200/12JD 12SM | G6 | 2785 | 235 | 340 | 254.5 |
| I-10SDS 200/13D 12SM | G6 | 2960 | 235 | 290 | 269 |
| I-10SDS 200/14D 12SM | G6 | 3135 | 235 | 290 | 285 |

**MOTORS TO CONNECT**
STANDARD coupling flange:
(6SM) NEMA 6, 6” motor;
(8SM) NEMA 8, 8”, 10” motor;
(12SM) C 12 Coupling, 12”, 14” motor;

# SDS

## Dimensions and weights

| TYPE | | mm | | | kg |
|---|---|---|---|---|---|
| | DN2 | f | l4 | l5 | Weight |
| I-10SDS 250/1I 6SM | G6 | 714 | 235 | 250,5 | 62 |
| I-10SDS 250/1H 6SM | G6 | 714 | 235 | 250,5 | 62 |
| I-10SDS 250/1F 6SM | G6 | 714 | 235 | 250,5 | 62.5 |
| I-10SDS 250/1DE 6SM | G6 | 714 | 235 | 250,5 | 62.5 |
| I-10SDS 250/1C 6SM | G6 | 714 | 235 | 250,5 | 63 |
| I-10SDS 250/1A 6SM | G6 | 714 | 235 | 250,5 | 63 |
| I-10SDS 250/1A 8SM | G6 | 739.5 | 235 | 251 | 63 |
| I-10SDS 250/2HI 6SM | G6 | 889 | 235 | 250,5 | 77.5 |
| I-10SDS 250/2H 6SM | G6 | 889 | 235 | 250,5 | 77.5 |
| I-10SDS 250/2H 8SM | G6 | 914.5 | 235 | 251 | 77.5 |
| I-10SDS 250/2F 6SM | G6 | 889 | 235 | 250,5 | 79 |
| I-10SDS 250/2F 8SM | G6 | 914.5 | 235 | 251 | 79 |
| I-10SDS 250/2G 6SM | G6 | 889 | 235 | 250,5 | 77.5 |
| I-10SDS 250/2G 8SM | G6 | 914.5 | 235 | 251 | 77.5 |
| I-10SDS 250/2DE 6SM | G6 | 889 | 235 | 250,5 | 79.5 |
| I-10SDS 250/2DE 8SM | G6 | 914.5 | 235 | 251 | 79.5 |
| I-10SDS 250/2C 8SM | G6 | 914.5 | 235 | 251 | 79.7 |
| I-10SDS 250/2A 8SM | G6 | 914.5 | 235 | 251 | 80 |
| I-10SDS 250/3EF 8SM | G6 | 1089.5 | 235 | 251 | 95.5 |
| I-10SDS 250/3JE 8SM | G6 | 1089.5 | 235 | 251 | 96 |
| I-10SDS 250/3C 8SM | G6 | 1089.5 | 235 | 251 | 96.5 |
| I-10SDS 250/3A 8SM | G6 | 1089.5 | 235 | 251 | 97 |
| I-10SDS 250/4EF 8SM | G6 | 1264.5 | 235 | 251 | 112 |
| I-10SDS 250/4D 8SM | G6 | 1264.5 | 235 | 251 | 113 |
| I-10SDS 250/4M 8SM | G6 | 1264.5 | 235 | 251 | 114 |
| I-10SDS 250/5JE 8SM | G6 | 1439.5 | 235 | 251 | 127 |
| I-10SDS 250/5BC 8SM | G6 | 1439.5 | 235 | 254 | 161.5 |
| I-10SDS 250/5A 8SM | G6 | 1439.5 | 235 | 254 | 131 |
| I-10SDS 250/6QC 8SM | G6 | 1614.5 | 235 | 254 | 148 |
| I-10SDS 250/6S 8SM | G6 | 1614.5 | 235 | 259 | 148 |
| I-10SDS 250/6MN 12SM | G6 | 1735 | 235 | 290 | 161 |
| I-10SDS 250/6A 8SM | G6 | 1614.5 | 235 | 259 | 148 |
| I-10SDS 250/7V 12SM | G6 | 1910 | 235 | 290 | 178 |
| I-10SDS 250/8B 12SM | G6 | 2085 | 235 | 290 | 195 |
| I-10SDS 250/8N 12SM | G6 | 2085 | 235 | 340 | 195 |
| I-10SDS 250/9B 12SM | G6 | 2260 | 235 | 290 | 212 |
| I-10SDS 250/10B 12SM | G6 | 2435 | 235 | 340 | 229 |
| I-10SDS 250/10A 12SM | G6 | 2435 | 235 | 290 | 229 |

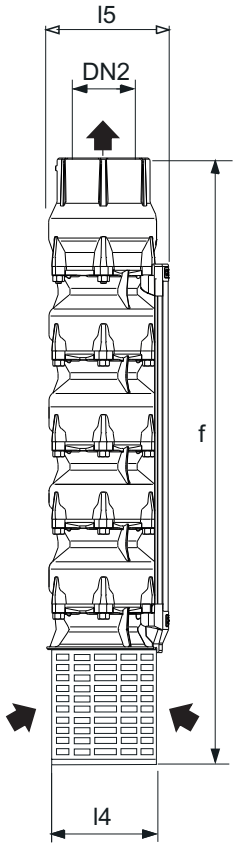


**MOTORS TO CONNECT**
STANDARD coupling flange:
(6SM) NEMA 6, 6” motor;
(8SM) NEMA 8, 8”, 10” motor;
(12SM) C 12 Coupling, 12”, 14” motor;

| TYPE | | mm | | | kg |
|---|---|---|---|---|---|
| | DN2 | f | l4 | l5 | Weight |
| I-10SDS 315/1CD 6SM | G6 | 714 | 235 | 250,5 | 63 |
| I-10SDS 315/1BC 6SM | G6 | 714 | 235 | 250,5 | 63 |
| I-10SDS 315/1BC 8SM | G6 | 739.5 | 235 | 251 | 63 |
| I-10SDS 315/1AB 6SM | G6 | 714 | 235 | 250,5 | 63 |
| I-10SDS 315/1AB 8SM | G6 | 739.5 | 235 | 251 | 63 |
| I-10SDS 315/2DE 6SM | G6 | 889 | 235 | 250,5 | 62.5 |
| I-10SDS 315/2DE 8SM | G6 | 914.5 | 235 | 251 | 79 |
| I-10SDS 315/2CD 8SM | G6 | 914.5 | 235 | 251 | 79.5 |
| I-10SDS 315/2BC 8SM | G6 | 914.5 | 235 | 251 | 79.5 |
| I-10SDS 315/2B 8SM | G6 | 914.5 | 235 | 251 | 80 |
| I-10SDS 315/2A 8SM | G6 | 914.5 | 235 | 251 | 80 |
| I-10SDS 315/3W 8SM | G6 | 1089.5 | 235 | 251 | 96 |
| I-10SDS 315/3A 8SM | G6 | 1089.5 | 235 | 251 | 95 |
| I-10SDS 315/4B 8SM | G6 | 1264.5 | 235 | 254 | 114 |
| I-10SDS 315/4A 8SM | G6 | 1264.5 | 235 | 254 | 110 |
| I-10SDS 315/5B 8SM | G6 | 1439.5 | 235 | 259 | 131 |
| I-10SDS 315/5M 12SM | G6 | 1560 | 235 | 290 | 143.5 |
| I-10SDS 315/5I 8SM | G6 | 1439.5 | 235 | 259 | 131 |
| I-10SDS 315/5A 12SM | G6 | 1560 | 235 | 290 | 143.5 |
| I-10SDS 315/6I 12SM | G6 | 1910 | 235 | 290 | 177.5 |
| I-10SDS 315/7X 12SM | G6 | 1910 | 235 | 290 | 177.5 |
| I-10SDS 315/7A 12SM | G6 | 1735 | 235 | 340 | 177.5 |
| I-10SDS 315/8A 12SM | G6 | 2085 | 235 | 290 | 194.5 |

# SDS

## Dimensions and weights

| TYPE | | mm | | | | | | | | kg |
|---|---|---|---|---|---|---|---|---|---|---|
| | DN2 | de | dk | f | j4 | l4 | l5 | s | z | Weight |
| I-12SDS 430/1D 8SM | 221 | 290 | 264 | 974.5 | 221 | 290 | 303 | 15 | 9 | 116.4 |
| I-12SDS 430/1CJ 8SM | 221 | 290 | 264 | 974.5 | 221 | 290 | 303 | 15 | 9 | 116.4 |
| I-12SDS 430/1CD 8SM | 221 | 290 | 264 | 974.5 | 221 | 290 | 303 | 15 | 9 | 116.4 |
| I-12SDS 430/1C 8SM | 221 | 290 | 264 | 974.5 | 221 | 290 | 303 | 15 | 9 | 116.4 |
| I-12SDS 430/1BC 8SM | 221 | 290 | 264 | 974.5 | 221 | 290 | 303 | 15 | 9 | 116.4 |
| I-12SDS 430/1B 8SM | 221 | 290 | 264 | 974.5 | 221 | 290 | 303 | 15 | 9 | 116.4 |
| I-12SDS 430/1A 8SM | 221 | 290 | 264 | 974.5 | 221 | 290 | 303 | 15 | 9 | 116.4 |
| I-12SDS 430/2E 8SM | 221 | 290 | 264 | 1189.5 | 221 | 290 | 303 | 15 | 9 | 153.4 |
| I-12SDS 430/2DE 8SM | 221 | 290 | 264 | 1189.5 | 221 | 290 | 303 | 15 | 9 | 153.4 |
| I-12SDS 430/2D 8SM | 221 | 290 | 264 | 1189.5 | 221 | 290 | 303 | 15 | 9 | 153.4 |
| I-12SDS 430/2CD 8SM | 221 | 290 | 264 | 1189.5 | 221 | 290 | 303 | 15 | 9 | 153.4 |
| I-12SDS 430/2C 8SM | 221 | 290 | 264 | 1189.5 | 221 | 290 | 303 | 15 | 9 | 153.4 |
| I-12SDS 430/2B 8SM | 221 | 290 | 264 | 1189.5 | 221 | 290 | 303 | 15 | 9 | 153.4 |
| I-12SDS 430/2AB 8SM | 221 | 290 | 264 | 1189.5 | 221 | 290 | 303 | 15 | 9 | 153.4 |
| I-12SDS 430/2A 12SM | 221 | 290 | 264 | 1170 | 221 | 290 | 320,5 | 15 | 9 | 158.9 |
| I-12SDS 430/2A 8SM | 221 | 290 | 264 | 1189.5 | 221 | 290 | 303 | 15 | 9 | 153.4 |
| I-12SDS 430/3CJ 8SM | 221 | 290 | 264 | 1404.5 | 221 | 290 | 303 | 15 | 9 | 190.3 |
| I-12SDS 430/3JD 8SM | 221 | 290 | 264 | 1404.5 | 221 | 290 | 303 | 15 | 9 | 190.3 |
| I-12SDS 430/3C 12SM | 221 | 290 | 264 | 1385 | 221 | 290 | 320,5 | 15 | 9 | 195.8 |
| I-12SDS 430/3Q 8SM | 221 | 290 | 264 | 1404.5 | 221 | 290 | 303 | 15 | 9 | 190.3 |
| I-12SDS 430/3W 12SM | 221 | 290 | 264 | 1385 | 221 | 290 | 320,5 | 15 | 9 | 195.8 |
| I-12SDS 430/3AB 12SM | 221 | 290 | 264 | 1385 | 221 | 290 | 320,5 | 15 | 9 | 195.8 |
| I-12SDS 430/3A 12SM | 221 | 290 | 264 | 1385 | 221 | 290 | 320,5 | 15 | 9 | 195.8 |
| I-12SDS E430/4D 12SM | 221 | 290 | 264 | 1600 | 221 | 290 | 320,5 | 15 | 9 | 232.8 |
| I-12SDS E430/4CD 8SM | 221 | 290 | 264 | 1619.5 | 221 | 290 | 303 | 15 | 9 | 227.3 |
| I-12SDS E430/4CD 12SM | 221 | 290 | 264 | 1600 | 221 | 290 | 320,5 | 15 | 9 | 232.8 |
| I-12SDS E430/4C 12SM | 221 | 290 | 264 | 1600 | 221 | 290 | 320,5 | 15 | 9 | 232.8 |
| I-12SDS E430/4M 12SM | 221 | 290 | 264 | 1600 | 221 | 290 | 320,5 | 15 | 9 | 232.8 |
| I-12SDS E430/4I 12SM | 221 | 290 | 264 | 1600 | 221 | 290 | 320,5 | 15 | 9 | 232.8 |
| I-12SDS E430/4A 12SM | 221 | 290 | 264 | 1600 | 221 | 290 | 320,5 | 15 | 9 | 232.8 |
| I-12SDS E430/5JD 12SM | 221 | 290 | 264 | 1815 | 221 | 290 | 320,5 | 15 | 9 | 269.8 |
| I-12SDS E430/5C 12SM | 221 | 290 | 264 | 1815 | 221 | 290 | 320,5 | 15 | 9 | 269.8 |
| I-12SDS E430/5BC 12SM | 221 | 290 | 264 | 1815 | 221 | 290 | 320,5 | 15 | 9 | 269.8 |
| I-12SDS E430/5B 12SM | 221 | 290 | 264 | 1815 | 221 | 290 | 320,5 | 15 | 9 | 269.8 |
| I-12SDS E430/5MN 12SM | 221 | 290 | 264 | 1815 | 221 | 290 | 320,5 | 15 | 9 | 269.8 |
| I-12SDS E430/5K 12SM | 221 | 290 | 264 | 1815 | 221 | 290 | 320,5 | 15 | 9 | 269.8 |
| I-12SDS E430/5A 12SM | 221 | 290 | 264 | 1815 | 221 | 290 | 320,5 | 15 | 9 | 269.8 |
| I-12SDS E430/6BJ 12SM | 221 | 290 | 264 | 2030 | 221 | 290 | 320,5 | 15 | 9 | 306.7 |
| I-12SDS E430/7D 12SM | 221 | 290 | 264 | 2245 | 221 | 290 | 320,5 | 15 | 9 | 343.7 |
| I-12SDS E430/7QC 12SM | 221 | 290 | 264 | 2245 | 221 | 290 | 320,5 | 15 | 9 | 343.7 |
| I-12SDS E430/7C 12SM | 221 | 290 | 264 | 2245 | 221 | 290 | 320,5 | 15 | 9 | 343.7 |
| I-12SDS E430/8D 12SM | 221 | 290 | 264 | 2460 | 221 | 290 | 320,5 | 15 | 9 | 380.7 |
| I-12SDS E430/9D 12SM | 221 | 290 | 264 | 2675 | 221 | 290 | 320,5 | 15 | 9 | 417.7 |
| I-12SDS E430/11D 12SM | 221 | 290 | 264 | 3105 | 221 | 290 | 320,5 | 15 | 9 | 491.6 |

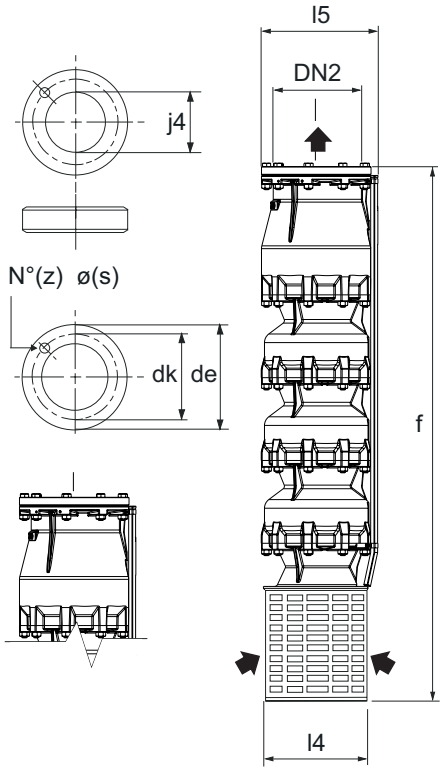


**MOTORS TO CONNECT**
STANDARD coupling flange:
(6SM) NEMA 6, 6” motor;
(8SM) NEMA 8, 8”, 10” motor;
(12SM) C 12 Coupling, 12”, 14” motor;

# SDS

## Cables connection kit

It allows connection of electric cables with junction submerged in water.
The kit includes:
- 4 connectors
- 4 shrink-sheaths for protection of individual wires
- 1 shrink-sheath for protection of the 4-pole wire.

The shrinkage of the sheath occurs with the action of a heat source (flame or hair dryer) that causes the resin to escape, thus guaranteeing the watertightness of the joint.

## Plant examples

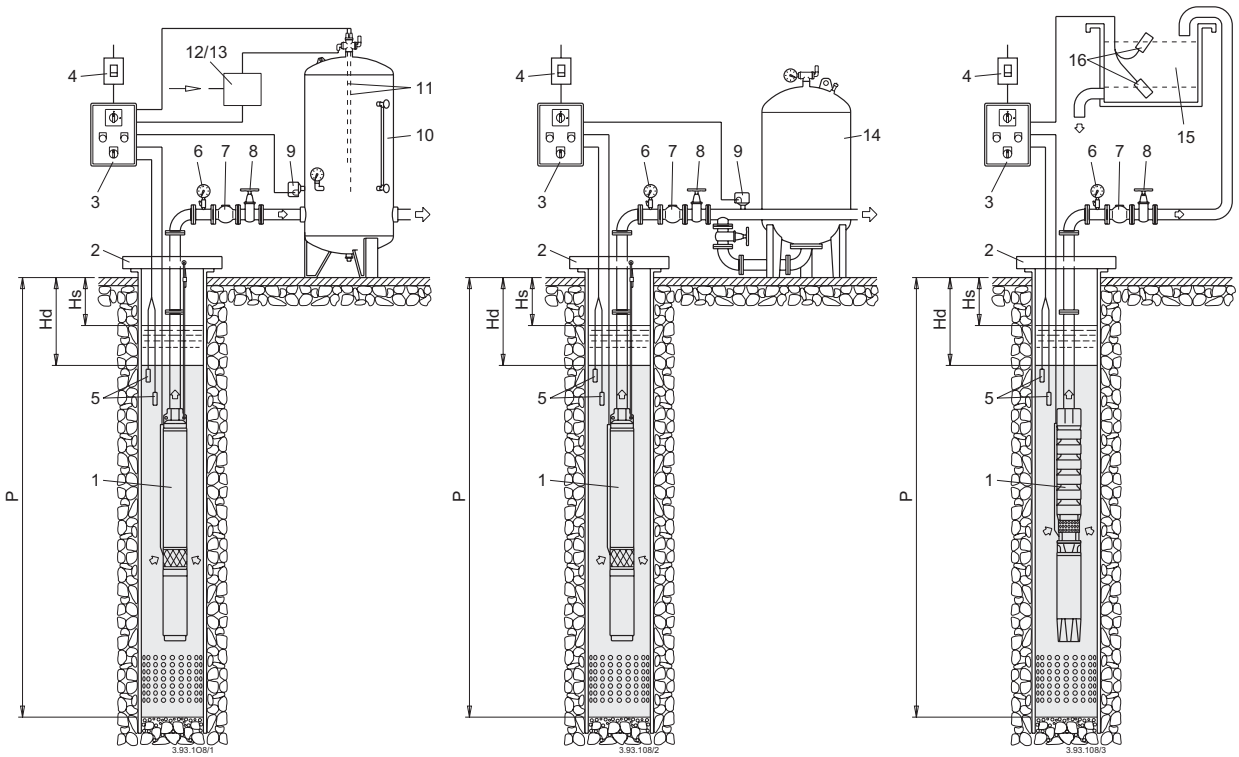


1 Submersible pump
2 Pump support system
3 Electric control board
4 Circuit breaker
5 Minimum level probes
6 Pressure gauge
7 Check valve
8 Throttle gate valve
9 Pressure switch
10 Pressure tank
11 Probes for air entry control
12 Electric valve
13 Compressor
14 Membrane tank
15 Storage tank
16 Start-stop probes

Hs Static level
Hd Dynamic level
P Tubewell depth

ed. 03/2025

# CS-R

# Submersible motors

# CS-R

| kW | 4" 1 ~ | 4" 3 ~ | 6" 3 ~ | | 8" 3 ~ | | 10" 3 ~ | | 12" 3 ~ | | kW |
|---|---|---|---|---|---|---|---|---|---|---|---|
| | CS-R | CS-R | CS-R | I-CS-R 316 | CS-R | I-CS-R 316 | CS-R | I-CS-R 316 | CS-R | I-CS-R 316 | |
| 0,37 | • | • | | | | | | | | | 0,37 |
| 0,55 | • | • | | | | | | | | | 0,55 |
| 0,75 | • | • | | | | | | | | | 0,75 |
| 1,1 | • | • | | | | | | | | | 1,1 |
| 1,5 | • | • | | | | | | | | | 1,5 |
| 2,2 | • | • | | | | | | | | | 2,2 |
| 3 | | • | | | | | | | | | 3 |
| 4 | | • | • | • | | | | | | | 4 |
| 5,5 | | • | • | • | | | | | | | 5,5 |
| 7,5 | | • | • | • | | | | | | | 7,5 |
| 9,2 | | | • | • | | | | | | | 9,2 |
| 11 | | | • | • | | | | | | | 11 |
| 13 | | | • | • | | | | | | | 13 |
| 15 | | | • | • | | | | | | | 15 |
| 18,5 | | | • | • | | | | | | | 18,5 |
| 22 | | | • | • | | | | | | | 22 |
| 26 | | | • | • | | | | | | | 26 |
| 30 | | | • | • | • | • | | | | | 30 |
| 37 | | | • | • | • | • | | | | | 37 |
| 45 | | | • | • | • | • | | | | | 45 |
| 51 | | | | | • | • | | | | | 51 |
| 59 | | | | | • | • | | | | | 59 |
| 66 | | | | | • | • | | | | | 66 |
| 75 | | | | | • | • | • | • | • | • | 75 |
| 92 | | | | | • | • | • | • | • | • | 92 |
| 110 | | | | | • | • | • | • | • | • | 110 |
| 130 | | | | | | | • | • | • | • | 130 |
| 150 | | | | | | | • | • | • | • | 150 |
| 165 | | | | | | | • | • | | | 165 |
| 170 | | | | | | | | | • | • | 170 |
| 185 | | | | | | | • | • | • | • | 185 |
| 190 | | | | | | | | | • | • | 190 |
| 220 | | | | | | | | | • | • | 220 |
| 250 | | | | | | | | | • | • | 250 |
| 300 | | | | | | | | | • | • | 300 |
| 350 | | | | | | | | | • | • | 350 |
| 400 | | | | | | | | | • | • | 400 |

## Rewindable motor CS-R series

## Operating conditions

| Motor | Motor P2 | Max. Liquid temperature | Cooling minimum flow velocity | Max n° of starting x hour |
|---|---|---|---|---|
| 4CS-R | all | 35 °C | 0,1 m/s | 30 |
| 6CS-R | 4÷15 kW | 40 °C | 0,5 m/s | 20 |
| 6CS-R | 18,5÷30 kW | 35 °C | 0,5 m/s | 20 |
| 6CS-R | 37÷45 kW | 30 °C | 0,5 m/s | 20 |
| 8CS-R | 30÷45 kW | 30 °C | 0,2 m/s | 10 |
| 8CS-R | 51 kW | 30 °C | 0,2 m/s | 8 |
| 8CS-R | 59÷75 kW | 30 °C | 0,5 m/s | 8 |
| 8CS-R | 92÷110 kW | 30 °C | 0,5 m/s | 6 |
| 10CS-R | all | 25 °C | 0,5 m/s | 6 |
| 12CS-R | all | 25 °C | 0,5 m/s | 5 |

Continuous duty.

# CS-R

## Rewindable motor CS-R series

The CS-R 6/8/10/12" motors are in a water bath with the wire being coated with polyvinyl chloride, while the CS-R 4” motors have a special food grade dielectric fluid that gives a better lubricant effect, increasing the life of all moving parts and the copper wires.
The special design of all our motors allows easy access to the various components, simplifying maintenance and repair.
All CS-R series motors can be rewound and are NEMA compliant.
**CS-R:**Standard construction
**I-CS-R:**AISI 316 construction.

## Operation data

2-pole induction motor, 50 Hz (n ≈ 2900 rpm).
Sized for connection to the pumps according to NEMA Standards (10”, 12" excluded).
Standard voltages:
single-phase 230 V - up to 2,2 kW for 4” motors.
three-phase 230 V; 400 V, for 4” motors.
400 V; 400/690 V for 6", 8", 10", 12" motors.
Voltage tolerance : ± 10%
In order to limit both current and torque at each starting, for rated motor powers equal to or higher than 7.5 kW, one of the following types of starting is necessary: star/delta, soft starter, stator impedance or autotransformer.
Insulation class:
- F for motors 4"

Protection IP 68.
Installation below water level: 200 m for 4”, 150 m for 6, 8,10,12”
Motor suitable operation with frequency converter (with suitable filter dv/dt).
Horizontal installation (6" 37-45kW, 8" 92kW, 10" 170-190 kW excluded)
**Cable**

| Motor 230V - 50 Hz - 1 ~ | Section | length |
|---|---|---|
| 4CS-R 0,37 ÷ 2,2 kW | 4 x 1,5 mm2 | 1,7 m |

| Motor 400V - 50 Hz - 3 ~ | Section | length |
|---|---|---|
| 4CS-R 0,37 ÷ 3 kW | 4 x 1,5 mm2 | 1,7 m |
| 4CS-R 4 ÷ 7,5 kW | 4 x 2 mm2 | 2,7 m |
| 6CS-R 4 ÷ 11 kW | 3 x (1x2,5) mm2 | 3,5 m |
| 6CS-R 13 ÷ 22 kW | 3 x (1x4) mm2 | 3,5 m |
| 6CS-R 26 - 30 kW | 3 x (1x6) mm2 | 3,5 m |
| 6CS-R 37 - 45 kW | 3 x (1x10) mm2 | 4,5 m |
| 8CS-R 30 ÷ 45 kW | 3 x (1x16) mm2 | 4 m |
| 8CS-R 51 ÷ 92 kW | 3 x (1x25) mm2 | 4 m |
| 8CS-R 110 kW | 3 x (1x35) mm2 | 4 m |
| 10CS-R 75 ÷ 92 kW | 3x(1x25) mm2 | 4 m |
| 10CS-R 110 ÷ 150 kW | 3x(1x50) mm2 | 4 m |
| 10CS-R 165 ÷ 185 kW | 3x(1x70) mm2 | 4 m |
| 12CS-R 170 ÷ 190 kW | 3x(1x95) mm2 | 5 m |
| 12CS-R 220 ÷ 400 kW | 6x(1x70) mm2 | 5 m |

## Materials

| **Components** | **4"** |
|---|---|
| External frame | Chrome-nickel steel 1.4301 EN 10088 (AISI 304) |
| Motor flange | Cast iron with cataphoresis treatment and protected with a Cr-Ni steel AISI 304 cover |
| Shaft | Chrome-nickel steel 1.4301 EN 10088 (AISI 304) |
| Thrust bearing | Oil wetted |

| **Components** | **6", 8", 10", 12" standard** | **6", 8", 10", 12" (AISI 316)** |
|---|---|---|
| External frame | Steel 1.4307 EN 10088 (AISI 304L) (Steel AISI 316L for 6”) | Stainless Steel 1.4404 EN 10088 (AISI 316L) |
| Motor flange | Cast iron GJL 250 EN 1561 (Cast iron G 25 EN 1561 for 8,10”) | Stainless Steel 1.4404 EN 10088 (AISI 316L) |
| Shaft | Cr-Ni steel 1.4057 EN 10088 (AISI 431) (Steel AISI 630 for 8,10”) | Duplex 1.4462 (Steel AISI 630 for 8,10”) |
| Thrust bearing | Bronze | Bronze |

## Special features on request

- Other voltage.
- Frequency 60 Hz.
- Higher liquid temperature.
- PT100 temperature sensor (supplied disassembled as standard for CS-R 10/12” motors)
- PE2 / PA winding insulation
- Cooling jackets
- Special Coupling Flange

# CS-R

## Performance, dimensions and weights

### 4" CS-R - 1 ~

| Pump type | PN | | IN 230 V | Power factor | Efficiency | R.P.M. | Direct start | Capacitor 450 Vc | Axial thrust | M | Weight |
|---|---|---|---|---|---|---|---|---|---|---|---|
| | kW | HP | A | cos ϕ | η % | | IA | µF | N | mm | kg |
| 4CS-R 0,37MC | 0,37 | 0,5 | 3.6 | 0.93 | 50 | 2805 | 10.5 | 20 | 2000 | 311.3 | 6.45 |
| 4CS-R 0,55MC | 0,55 | 0,75 | 4.7 | 0.92 | 56 | 2790 | 14.5 | 25 | 2000 | 331.4 | 7.2 |
| 4CS-R 0,75MC | 0,75 | 1 | 5.6 | 0.97 | 61 | 2830 | 16.5 | 35 | 2000 | 356.4 | 8.45 |
| 4CS-R 1,1MC | 1,1 | 1,5 | 7.6 | 0.94 | 68 | 2845 | 22 | 40 | 2000 | 396.4 | 10.2 |
| 4CS-R 1,5MC | 1,5 | 2 | 10.7 | 0.92 | 66 | 2840 | 32 | 60 | 2000 | 436.5 | 11.65 |
| 4CS-R 2,2MC | 2,2 | 3 | 14.6 | 0.93 | 69 | 2810 | 43 | 80 | 2000 | 491.5 | 14.9 |

### 4" CS-R - 3 ~

| Pump type | PN | | IN 400 V | Power factor | Efficiency | R.P.M. | Direct start | Axial thrust | M | Weight |
|---|---|---|---|---|---|---|---|---|---|---|
| | kW | HP | A | cos ϕ | η % | | IA | N | mm | kg |
| 4CS-R 0,37TC | 0,37 | 0,5 | 1.7 | 0.61 | 52 | 2830 | 6 | 2000 | 311.3 | 6.45 |
| 4CS-R 0,55TC | 0,55 | 0,75 | 2 | 0.66 | 60 | 2815 | 7 | 2000 | 331.4 | 7.2 |
| 4CS-R 0,75TC | 0,75 | 1 | 2.5 | 0.69 | 62 | 2820 | 8.5 | 2000 | 356.4 | 8.45 |
| 4CS-R 1,1TC | 1,1 | 1,5 | 3.3 | 0.76 | 67 | 2810 | 11.5 | 2000 | 371.4 | 9.35 |
| 4CS-R 1,5TC | 1,5 | 2 | 4.4 | 0.71 | 69 | 2815 | 15.5 | 2000 | 396.4 | 10.2 |
| 4CS-R 2,2TC | 2,2 | 3 | 6.1 | 0.73 | 71 | 2815 | 21 | 2000 | 436.5 | 11.65 |
| 4CS-R 3TC | 3 | 4 | 6.9 | 0.85 | 74 | 2820 | 24 | 3000 | 450 | 12.1 |
| 4CS-R 4TC | 4 | 5,5 | 9.4 | 0.84 | 75 | 2820 | 33 | 5000 | 505 | 15.1 |
| 4CS-R 5,5TC | 5,5 | 7,5 | 13.4 | 0.77 | 77 | 2820 | 47 | 5000 | 589 | 19.8 |
| 4CS-R 7,5TC | 7.5 | 10 | 16.4 | 0.81 | 81 | 2840 | 88 | 5000 | 800 | 29 |

4" NEMA

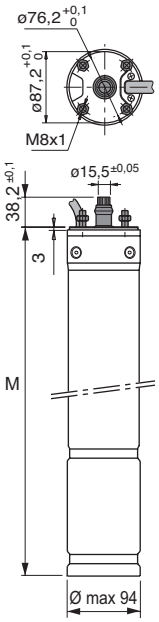


### 6" CS-R, I-6"CS-R

| Pump type | | PN | | IN 400 V | Power factor cos ϕ | | Efficiency η % | | R.P.M. | Direct start | | Axial thrust | M | Weight |
|---|---|---|---|---|---|---|---|---|---|---|---|---|---|---|
| Standard | AISI 316 | kW | HP | A | 4/4 | 3/4 | 4/4 | 3/4 | R.P.M. | IA/IN | CA/CN | N | mm | kg |
| 6CS-R 4 | I-6CS-R 4 | 4 | 5,5 | 9,5 | 0,79 | 0,72 | 76,6 | 76 | 2895 | 4,35 | 1 | 30000 | 570 | 34,6 |
| 6CS-R 5,5 | I-6CS-R 5,5 | 5,5 | 7,5 | 12,4 | 0,83 | 0,79 | 77,2 | 78,1 | 2875 | 4 | 0,9 | 30000 | 615 | 39,6 |
| 6CS-R 7,5 | I-6CS-R 7,5 | 7,5 | 10 | 16,6 | 0,83 | 0,78 | 78,5 | 77,7 | 2885 | 4,45 | 1 | 30000 | 670 | 44,4 |
| 6CS-R 9,2 | I-6CS-R 9,2 | 9,2 | 12,5 | 20,8 | 0,81 | 0,74 | 79,1 | 76,8 | 2880 | 4,2 | 0,9 | 30000 | 700 | 47,7 |
| 6CS-R 11 | I-6CS-R 11 | 11 | 15 | 25,4 | 0,79 | 0,7 | 79,4 | 79 | 2870 | 4,75 | 1,4 | 30000 | 715 | 52 |
| 6CS-R 13 | I-6CS-R 13 | 13 | 17,5 | 28,3 | 0,83 | 0,75 | 79,9 | 80,9 | 2870 | 4,75 | 1,3 | 30000 | 750 | 56 |
| 6CS-R 15 | I-6CS-R 15 | 15 | 20 | 32,5 | 0,83 | 0,75 | 80,4 | 82,2 | 2880 | 4,2 | 1 | 30000 | 790 | 59,8 |
| 6CS-R 18,5 | I-6CS-R 18,5 | 18,5 | 25 | 40,4 | 0,81 | 0,73 | 81,3 | 82,9 | 2870 | 4,8 | 1,5 | 30000 | 830 | 64,2 |
| 6CS-R 22 | I-6CS-R 22 | 22 | 30 | 46,6 | 0,82 | 0,75 | 83 | 84,2 | 2870 | 4,9 | 1,5 | 30000 | 920 | 74,5 |
| 6CS-R 26 | I-6CS-R 26 | 26 | 35 | 55,8 | 0,8 | 0,73 | 84 | 85,4 | 2880 | 5,25 | 1,7 | 30000 | 1055 | 89,3 |
| 6CS-R 30 | I-6CS-R 30 | 30 | 40 | 62,5 | 0,83 | 0,77 | 83,5 | 85,4 | 2870 | 4,6 | 1,3 | 30000 | 1165 | 101,9 |
| 6CS-R 37 | I-6CS-R 37 | 37 | 50 | 76,6 | 0,84 | 0,78 | 83,5 | 85,2 | 2860 | 4,55 | 1,3 | 30000 | 1245 | 111 |
| 6CS-R 45 | I-6CS-R 45 | 45 | 60 | 96,3 | 0,82 | 0,75 | 82,5 | 84,3 | 2855 | 4,65 | 1,5 | 30000 | 1322 | 123.3 |

6" NEMA

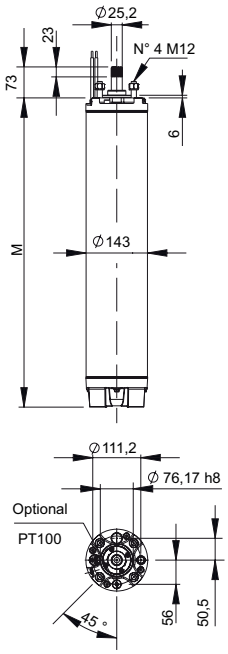

# CS-R

## Performance, dimensions and weights

### 8" CS-R, I-8"CS-R

| Pump type | | PN | | IN 400 V | Power factor cos ϕ | | Efficiency η % | | R.P.M. | Direct start | | Axial thrust | M | Weight |
|---|---|---|---|---|---|---|---|---|---|---|---|---|---|---|
| Standard | AISI 316 | kW | HP | A | 4/4 | 3/4 | 4/4 | 3/4 | R.P.M. | IA/IN | CA/CN | N | mm | kg |
| 8CS-R 30 | I-8CS-R 30 | 30 | 40 | 61 | 0,86 | 0,83 | 82,6 | 83,3 | 2900 | 5,5 | 1,8 | 50000 | 1060 | 143 |
| 8CS-R 37 | I-8CS-R 37 | 37 | 50 | 76,2 | 0,83 | 0,78 | 84,6 | 84,5 | 2910 | 5,9 | 1,8 | 50000 | 1115 | 155 |
| 8CS-R 45 | I-8CS-R 45 | 45 | 60 | 91,9 | 0,83 | 0,79 | 84,8 | 85,2 | 2905 | 5,85 | 1,9 | 50000 | 1195 | 172 |
| 8CS-R 51 | I-8CS-R 51 | 51 | 70 | 101,1 | 0,85 | 0,8 | 85,9 | 86,5 | 2910 | 6 | 1,9 | 50000 | 1290 | 192 |
| 8CS-R 59 | I-8CS-R 59 | 59 | 80 | 116,7 | 0,84 | 0,79 | 86,8 | 87,2 | 2915 | 6,2 | 2 | 50000 | 1395 | 210 |
| 8CS-R 66 | I-8CS-R 66 | 66 | 90 | 131,2 | 0,84 | 0,79 | 86,6 | 87,1 | 2905 | 6,1 | 2 | 50000 | 1430 | 219 |
| 8CS-R 75 | I-8CS-R 75 | 75 | 100 | 145,4 | 0,86 | 0,82 | 86,6 | 87,5 | 2895 | 5,9 | 2 | 50000 | 1500 | 235 |
| 8CS-R 92 | I-8CS-R 92 | 92 | 125 | 179,2 | 0,85 | 0,8 | 86,9 | 87,8 | 2900 | 6,3 | 2,1 | 50000 | 1685 | 265 |
| 8CS-R 110 | I-8CS-R 110 | 110 | 150 | 213,8 | 0,86 | 0,81 | 86,9 | 87,8 | 2895 | 6 | 1,9 | 50000 | 1760 | 283 |

8" NEMA

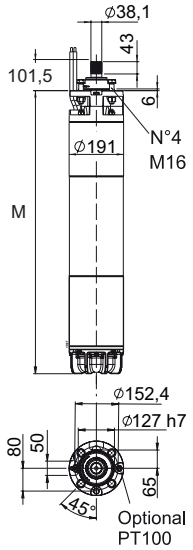


### 10" CS-R, I-10"CS-R

| Pump type | | PN | | IN 400 V | Power factor cos ϕ | | Efficiency η % | | R.P.M. | Direct start | | Axial thrust | M | Weight |
|---|---|---|---|---|---|---|---|---|---|---|---|---|---|---|
| Standard | AISI 316 | kW | HP | A | 4/4 | 3/4 | 4/4 | 3/4 | R.P.M. | IA/IN | CA/CN | N | mm | kg |
| 10CS-R 75 | I-10CS-R 75 | 75 | 100 | 145,5 | 0,87 | 0,85 | 85,9 | 86,6 | 2925 | 6,1 | 1,4 | 70000 | 1406 | 300 |
| 10CS-R 92 | I-10CS-R 92 | 92 | 125 | 177,2 | 0,86 | 0,84 | 87 | 87,3 | 2925 | 6,7 | 1,6 | 70000 | 1536 | 338 |
| 10CS-R 110 | I-10CS-R 110 | 110 | 150 | 209,7 | 0,86 | 0,83 | 87,8 | 88,2 | 2930 | 6,3 | 1,5 | 70000 | 1641 | 373 |
| 10CS-R 130 | I-10CS-R 130 | 130 | 175 | 251,1 | 0,86 | 0,83 | 87,9 | 88,4 | 2930 | 6,6 | 1,6 | 70000 | 1766 | 408 |
| 10CS-R 150 | I-10CS-R 150 | 150 | 200 | 284,3 | 0,86 | 0,83 | 88,4 | 88,8 | 2930 | 6,7 | 1,7 | 70000 | 1866 | 436 |
| 10CS-R 165 | I-10CS-R 165 | 165 | 220 | 317,5 | 0,85 | 0,81 | 88,3 | 88,6 | 2930 | 6,9 | 1,7 | 70000 | 2026 | 466 |
| 10CS-R 185 | I-10CS-R 185 | 185 | 250 | 358,5 | 0,84 | 0,8 | 88,4 | 88,6 | 2935 | 6,7 | 1,6 | 70000 | 2126 | 499 |

8" NEMA

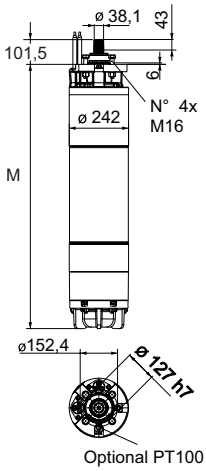


### 12" CS-R, I-12"CS-R

| Pump type | | PN | | IN 400 V | Power factor cos ϕ | | Efficiency η % | | R.P.M. | Direct start | | Axial thrust | M | Weight |
|---|---|---|---|---|---|---|---|---|---|---|---|---|---|---|
| Standard | AISI 316 | kW | HP | A | 4/4 | 3/4 | 4/4 | 3/4 | R.P.M. | IA/IN | CA/CN | N | mm | kg |
| 12CS-R 170 | I-12CS-R 170 | 170 | 230 | 327 | 0.845 | 0.8 | 89 | 89 | 2955 | 5.5 | 1.3 | 80000 | 1958 | 691 |
| 12CS-R 190 | I-12CS-R 190 | 190 | 260 | 360 | 0.85 | 0.81 | 89.4 | 89.5 | 2955 | 5 | 1.2 | 80000 | 2108 | 759 |
| 12CS-R 220 | I-12CS-R 220 | 220 | 300 | 413.2 | 0.86 | 0.865 | 89.3 | 89.2 | 2940 | 4.8 | 1.3 | 80000 | 1958 | 691 |
| 12CS-R 250 | I-12CS-R 250 | 250 | 340 | 470.7 | 0.86 | 0.86 | 89.1 | 89.2 | 2935 | 4.5 | 1.3 | 80000 | 2108 | 759 |
| 12CS-R 300 | I-12CS-R 300 | 300 | 400 | 558.2 | 0.87 | 0.835 | 89 | 88.9 | 2930 | 4.6 | 1.5 | 80000 | 2258 | 812 |
| 12CS-R 350 | I-12CS-R 350 | 350 | 475 | 670.4 | 0.845 | 0.82 | 89 | 89.2 | 2940 | 4.8 | 1.4 | 80000 | 2308 | 837 |
| 12CS-R 400 | I-12CS-R 400 | 400 | 540 | 752.6 | 0.865 | 0.845 | 88.7 | 89 | 2920 | 4.3 | 1.4 | 80000 | 2358 | 858 |

12" C

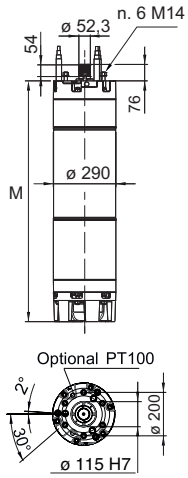

# CS-R

## Relationship between temperature and salinity

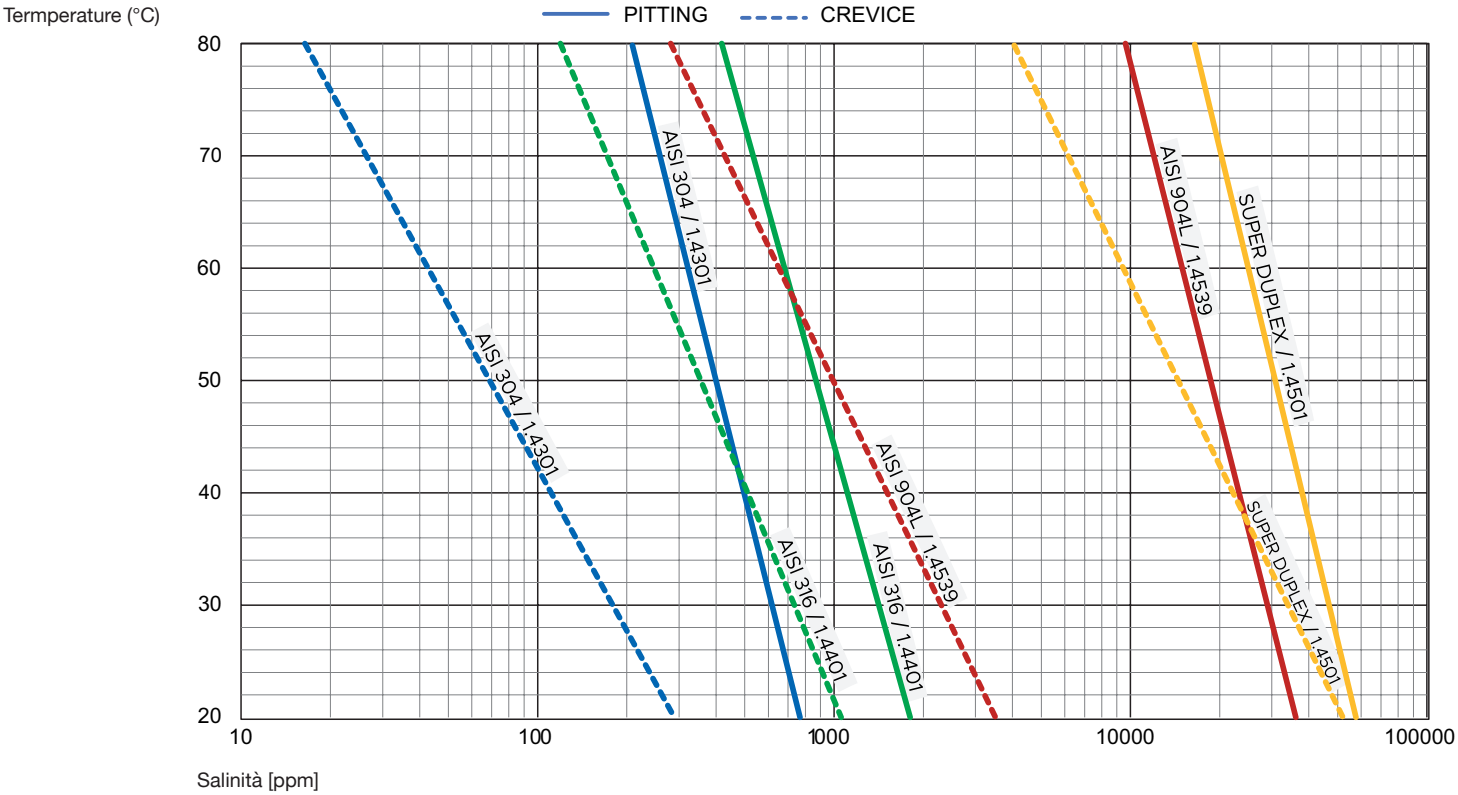


## Coupling flange

Motor 4”
4" NEMA Coupling

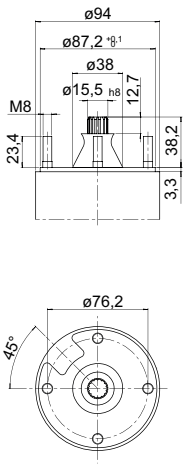


Motor 6”
6" NEMA Coupling

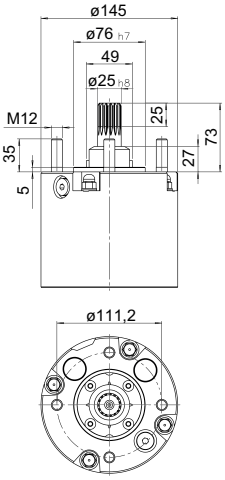


Motor 8”
6" NEMA Coupling

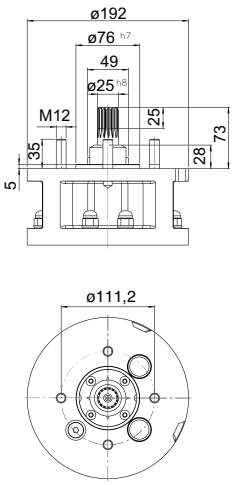


Motor 8”
8" NEMA Coupling

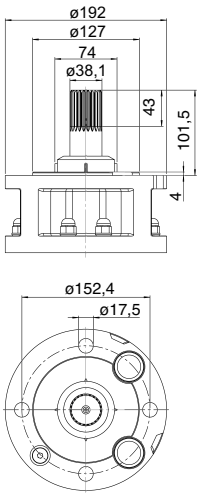


Motor 10”
8" NEMA Coupling

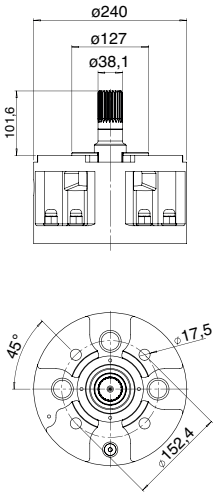


Motor 12”
12" C Coupling

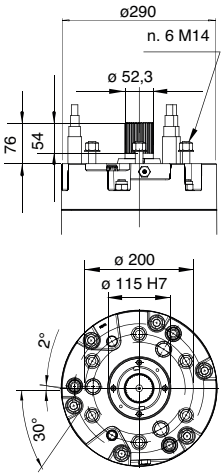

# CS-R

calpeda®

## Maximum length of electric cables

| IN | 230 Volt - 50 Hz - 1 ~ | | | | |
|---|---|---|---|---|---|
| | 1 four-wires cable 4 x ....mm² | | | | |
| A | 1,5 | 2,5 | 4 | 6 | 10 |
| | cables max m | | | | |
| 2 | 142 | 235 | | | |
| 4 | 71 | 118 | 189 | | |
| 6 | 47 | 78 | 126 | 189 | |
| 8 | 35 | 59 | 94 | 142 | 231 |
| 10 | 28 | 47 | 76 | 113 | 185 |
| 12 | 24 | 39 | 63 | 95 | 154 |
| 14 | 20 | 34 | 54 | 81 | 132 |
| 16 | 18 | 29 | 47 | 71 | 115 |
| 18 | | 26 | 42 | 63 | 103 |
| 20 | | 24 | 38 | 57 | 92 |
| 25 | | | 30 | 45 | 74 |
| 30 | | | 25 | 38 | 62 |

Voltage drop 3%.
Maximum ambient temperature + 30 °C.

### Direct-starting

| IN | 230 Volt - 50 Hz - 3 ~ | | | | | | | | | | | | |
|---|---|---|---|---|---|---|---|---|---|---|---|---|---|
| | 1 four-wires cable 4 x ....mm² | | | | | | | | 4 cables 1 x ....mm² | | | | |
| A | 1,5 | 2,5 | 4 | 6 | 10 | 16 | 25 | 35 | 50 | 70 | 95 | 120 | 150 |
| | cables max m | | | | | | | | | | | | |
| 2 | 164 | 272 | | | | | | | | | | | |
| 4 | 82 | 136 | 218 | | | | | | | | | | |
| 6 | 55 | 91 | 145 | 218 | | | | | | | | | |
| 8 | 41 | 68 | 109 | 164 | 267 | | | | | | | | |
| 10 | 33 | 54 | 87 | 131 | 213 | | | | | | | | |
| 12 | 27 | 45 | 73 | 109 | 178 | | | | | | | | |
| 14 | 23 | 39 | 62 | 94 | 152 | 239 | | | | | | | |
| 16 | 20 | 34 | 55 | 82 | 133 | 209 | | | | | | | |
| 18 | | 30 | 48 | 73 | 118 | 186 | | | | | | | |
| 20 | | 27 | 44 | 65 | 107 | 167 | 257 | | | | | | |
| 25 | | | 35 | 52 | 85 | 134 | 206 | | | | | | |
| 30 | | | 29 | 44 | 71 | 111 | 171 | 233 | | | | | |
| 35 | | | | 37 | 61 | 95 | 147 | 200 | | | | | |
| 40 | | | | 33 | 53 | 83 | 129 | 175 | 227 | | | | |
| 45 | | | | | 47 | 74 | 114 | 155 | 202 | | | | |
| 50 | | | | | 43 | 67 | 103 | 140 | 181 | 249 | | | |
| 60 | | | | | | 56 | 86 | 116 | 151 | 207 | | | |
| 70 | | | | | | 48 | 73 | 100 | 130 | 178 | 230 | | |
| 80 | | | | | | | 64 | 87 | 113 | 155 | 201 | 241 | |
| 90 | | | | | | | 57 | 78 | 101 | 138 | 179 | 214 | |
| 100 | | | | | | | 51 | 70 | 91 | 124 | 161 | 193 | 224 |
| 110 | | | | | | | | 64 | 82 | 113 | 146 | 175 | 203 |
| 120 | | | | | | | | 58 | 76 | 104 | 134 | 161 | 186 |
| 130 | | | | | | | | | 70 | 96 | 124 | 148 | 172 |
| 140 | | | | | | | | | 65 | 89 | 115 | 138 | 160 |
| 150 | | | | | | | | | 60 | 83 | 107 | 128 | 149 |
| 160 | | | | | | | | | 57 | 78 | 101 | 120 | 140 |
| 170 | | | | | | | | | 53 | 73 | 95 | 113 | 132 |
| 180 | | | | | | | | | 50 | 69 | 89 | 107 | 124 |
| 190 | | | | | | | | | 48 | 65 | 85 | 101 | 118 |
| 200 | | | | | | | | | 45 | 62 | 81 | 96 | 112 |
| 220 | | | | | | | | | | 57 | 73 | 88 | 102 |
| 240 | | | | | | | | | | 52 | 67 | 80 | 93 |
| 260 | | | | | | | | | | | 62 | 74 | 86 |
| 280 | | | | | | | | | | | 58 | 69 | 80 |
| 300 | | | | | | | | | | | 54 | 64 | 75 |

| IN | 400 Volt - 50 Hz - 3 ~ | | | | | | | | | | | | | | |
|---|---|---|---|---|---|---|---|---|---|---|---|---|---|---|---|
| | 1 four-wires cable 4 x ....mm2 | | | | | | | | 4 cables 1 x ....mm² | | | | | | |
| A | 1,5 | 2,5 | 4 | 6 | 10 | 16 | 25 | 35 | 50 | 70 | 95 | 120 | 150 | 185 | 240 |
| | cables max m | | | | | | | | | | | | | | |
| 2 | 285 | 473 | | | | | | | | | | | | | |
| 4 | 143 | 236 | 379 | | | | | | | | | | | | |
| 6 | 95 | 158 | 253 | | | | | | | | | | | | |
| 8 | 71 | 118 | 190 | 285 | | | | | | | | | | | |
| 10 | 57 | 95 | 152 | 228 | | | | | | | | | | | |
| 12 | 48 | 79 | 126 | 190 | 309 | | | | | | | | | | |
| 14 | 41 | 68 | 108 | 163 | 265 | | | | | | | | | | |
| 16 | 36 | 59 | 95 | 142 | 232 | | | | | | | | | | |
| 18 | | 53 | 84 | 127 | 206 | 323 | | | | | | | | | |
| 20 | | 47 | 76 | 114 | 185 | 290 | | | | | | | | | |
| 25 | | | 61 | 91 | 148 | 232 | 358 | | | | | | | | |
| 30 | | | 51 | 76 | 124 | 194 | 298 | | | | | | | | |
| 35 | | | | 65 | 106 | 166 | 256 | 347 | | | | | | | |
| 40 | | | | 57 | 93 | 145 | 224 | 304 | | | | | | | |
| 45 | | | | | 82 | 129 | 199 | 270 | | | | | | | |
| 50 | | | | | 74 | 116 | 179 | 243 | 316 | | | | | | |
| 60 | | | | | | 97 | 149 | 203 | 263 | | | | | | |
| 70 | | | | | | 83 | 128 | 174 | 225 | 309 | | | | | |
| 80 | | | | | | | 112 | 152 | 197 | 270 | | | | | |
| 90 | | | | | | | 99 | 135 | 175 | 240 | 311 | | | | |
| 100 | | | | | | | 89 | 122 | 158 | 216 | 280 | | | | |
| 110 | | | | | | | | 110 | 143 | 197 | 255 | 305 | | | |
| 120 | | | | | | | | 101 | 132 | 180 | 233 | 279 | | | |
| 130 | | | | | | | | | 121 | 166 | 216 | 258 | 299 | | |
| 140 | | | | | | | | | 113 | 155 | 200 | 239 | 278 | | |
| 150 | | | | | | | | | 105 | 144 | 187 | 223 | 259 | 302 | |
| 160 | | | | | | | | | 99 | 135 | 175 | 209 | 243 | 283 | |
| 170 | | | | | | | | | 93 | 127 | 165 | 197 | 229 | 267 | |
| 180 | | | | | | | | | 88 | 120 | 156 | 186 | 216 | 252 | 297 |
| 190 | | | | | | | | | 83 | 114 | 147 | 176 | 205 | 239 | 281 |
| 200 | | | | | | | | | 79 | 108 | 140 | 168 | 195 | 227 | 267 |
| 220 | | | | | | | | | | 98 | 127 | 152 | 177 | 206 | 243 |
| 240 | | | | | | | | | | 90 | 117 | 140 | 162 | 189 | 223 |
| 260 | | | | | | | | | | | 108 | 129 | 150 | 174 | 206 |
| 280 | | | | | | | | | | | 100 | 120 | 139 | 162 | 191 |
| 300 | | | | | | | | | | | 93 | 112 | 130 | 151 | 178 |

# CS-R

calpeda®

## Maximum length of electric cables

### Star-delta starting

| IN | 230 Volt - 50 Hz - 3 ~ Y/Δ | | | | | | | | | | | | |
|---|---|---|---|---|---|---|---|---|---|---|---|---|---|
| | 2 four-wires cables 4 G ....mm2 | | | | | | | | 7 cables 1 x ....mm2 | | | | |
| A | 1,5 | 2,5 | 4 | 6 | 10 | 16 | 25 | 35 | 50 | 70 | 95 | 120 | 150 |
| | cables max m | | | | | | | | | | | | |
| 30 | 19 | 31 | 50 | 76 | 123 | 193 | | | | | | | |
| 35 | | 27 | 43 | 65 | 105 | 165 | | | | | | | |
| 40 | | 24 | 38 | 57 | 92 | 144 | | | | | | | |
| 45 | | 21 | 34 | 50 | 82 | 128 | 198 | | | | | | |
| 50 | | | 30 | 45 | 74 | 116 | 178 | | | | | | |
| 60 | | | | 38 | 62 | 96 | 148 | 201 | | | | | |
| 70 | | | | 32 | 53 | 83 | 127 | 173 | 224 | | | | |
| 80 | | | | | 46 | 72 | 111 | 151 | 196 | | | | |
| 90 | | | | | 41 | 64 | 99 | 134 | 174 | | | | |
| 100 | | | | | | 58 | 89 | 121 | 157 | 215 | | | |
| 110 | | | | | | 53 | 81 | 110 | 143 | 196 | | | |
| 120 | | | | | | 48 | 74 | 101 | 131 | 179 | | | |
| 130 | | | | | | 44 | 68 | 93 | 121 | 166 | 214 | | |
| 140 | | | | | | | 64 | 86 | 112 | 154 | 199 | | |
| 150 | | | | | | | 59 | 81 | 105 | 143 | 186 | | |
| 160 | | | | | | | 56 | 76 | 98 | 134 | 174 | 208 | |
| 170 | | | | | | | 52 | 71 | 92 | 127 | 164 | 196 | |
| 180 | | | | | | | | 67 | 87 | 120 | 155 | 185 | |
| 190 | | | | | | | | 64 | 83 | 113 | 147 | 175 | 204 |
| 200 | | | | | | | | | 78 | 108 | 139 | 167 | 194 |
| 220 | | | | | | | | | | 98 | 127 | 152 | 176 |
| 240 | | | | | | | | | | 90 | 116 | 139 | 161 |
| 260 | | | | | | | | | | 83 | 107 | 128 | 149 |
| 280 | | | | | | | | | | 77 | 100 | 119 | 138 |
| 300 | | | | | | | | | | 7 | 93 | 111 | 129 |

| IN | 400 Volt - 50 Hz - 3 ~ Y/Δ | | | | | | | | | | | | |
|---|---|---|---|---|---|---|---|---|---|---|---|---|---|
| | 2 four-wires cables 4 G ....mm2 | | | | | | | | 7 cables 1 x ....mm2 | | | | |
| A | 1,5 | 2,5 | 4 | 6 | 10 | 16 | 25 | 35 | 50 | 70 | 95 | 120 | 150 |
| | cables max m | | | | | | | | | | | | |
| 30 | 33 | 55 | 88 | 131 | 214 | 335 | | | | | | | |
| 35 | | 47 | 75 | 113 | 183 | 287 | | | | | | | |
| 40 | | 41 | 66 | 99 | 160 | 251 | | | | | | | |
| 45 | | | 58 | 88 | 143 | 223 | 344 | | | | | | |
| 50 | | | 53 | 79 | 128 | 201 | 310 | | | | | | |
| 60 | | | | 66 | 107 | 167 | 258 | 350 | | | | | |
| 70 | | | | 56 | 92 | 144 | 221 | 300 | | | | | |
| 80 | | | | | 80 | 126 | 193 | 263 | 341 | | | | |
| 90 | | | | | 71 | 112 | 172 | 234 | 303 | | | | |
| 100 | | | | | 64 | 100 | 155 | 210 | 273 | 374 | | | |
| 110 | | | | | 58 | 91 | 141 | 191 | 248 | 340 | | | |
| 120 | | | | | | 84 | 129 | 175 | 228 | 312 | | | |
| 130 | | | | | | 77 | 119 | 162 | 210 | 288 | 373 | | |
| 140 | | | | | | | 111 | 150 | 195 | 267 | 346 | | |
| 150 | | | | | | | 103 | 140 | 182 | 249 | 323 | | |
| 160 | | | | | | | 97 | 131 | 171 | 234 | 303 | 362 | |
| 170 | | | | | | | | 124 | 161 | 220 | 285 | 341 | |
| 180 | | | | | | | | 117 | 152 | 208 | 269 | 322 | |
| 190 | | | | | | | | 111 | 144 | 197 | 255 | 305 | 354 |
| 200 | | | | | | | | | 137 | 187 | 242 | 290 | 337 |
| 220 | | | | | | | | | | 170 | 220 | 264 | 306 |
| 240 | | | | | | | | | | 156 | 202 | 242 | 280 |
| 260 | | | | | | | | | | | 186 | 223 | 259 |
| 280 | | | | | | | | | | | 173 | 207 | 240 |
| 300 | | | | | | | | | | | 162 | 193 | 224 |

Against short-circuits and overloads to the electric pumps system we advise to follow the usually applied normative.
- To avoid a possible dry working of the electric pump in is better to install a level control.
- In order to avoid overheatings, tension grops above 3%, we advise to use suitable starting motors systems.
- All the cable wave to respect the usually applied normative and to present excellent insullation characteristics.

The tables show the maximum length of the cable depending on the current absorbed by the motor and the cross section area of the cable, at different voltages. The maximum voltage drop equal to 3%, cable temperature of 80°C, water installation similar to air installation at a temperature of 30°C.

## Choice of electric cable by calculation

For dimensioning the phase cross section area for the submersible motor need the following information:

- • V: Rated voltage (V)
- • I: Motor current (A)
- • L: Length of cable (km)
- • cos ϕ: power factor
- • Ambient temperature (°C)

The choice of the minimum cross section area of the phase conductor is determined by the rated motor current and the values reported in Table 1.

Table 1

| Type of cable* | Cable cross section | Maximum cable current | | | Resistance | Reactance |
|---|---|---|---|---|---|---|
| | | 1 Ader | | 2 Ader | R a 80°C Ω/ km 4) | X a 50 Hz Ω/ km 4) |
| | mm² | A 1) | A 2) | A 3) | | |
| four-wires cable | 1,5 | 18 | | 15 | 15,1 | 0,142 |
| four-wires cable | 2,5 | 24 | | 20 | 9,08 | 0,131 |
| four-wires cable | 4 | 32 | | 27 | 5,63 | 0,121 |
| four-wires cable | 6 | 41 | | 35 | 3,73 | 0,115 |
| four-wires cable | 10 | 57 | | 48 | 2,27 | 0,103 |
| four-wires cable | 16 | 76 | | 65 | 1,43 | 0,098 |
| four-wires cable | 25 | 96 | | 82 | 0,91 | 0,097 |
| four-wires cable | 35 | | 119 | 101 | 0,65 | 0,094 |
| single-wire cable | 50 | | 167 | 142 | 0,473 | 0,121 |
| single-wire cable | 70 | | 216 | 184 | 0,328 | 0,116 |
| single-wire cable | 95 | | 264 | 224 | 0,236 | 0,118 |
| single-wire cable | 120 | | 308 | 262 | 0,188 | 0,113 |
| single-wire cable | 150 | | 356 | 303 | 0,153 | 0,112 |
| single-wire cable | 185 | | 409 | 348 | 0,123 | 0,109 |
| single-wire cable | 240 | | 485 | 412 | 0,094 | 0,110 |

1) IEC 60364-5-52:2009 Tab.B52.4 / C
2) IEC 60364-5-52:2009 Tab.B52.6
3) 1)x0,85 IEC 60364-5-52:2009 Tab.B52.17 ITEM2
4) UNEL 35023-70

* Up to 35 mm2 sections four-wire cable are used, from 50 mm2 single core cables are recommended as well.Tab.1

Le portate massime dei cavi indicate nella Tabella 1 sono valide per temperatura ambiente di 30°C, qualora la temperatura ambiente fosse diversa, le portate massime dei cavi devono essere corrette con un coefficiente moltiplicativo riportato in Tabella 2.

Table 2 (IEC 60364-5-52:2009 Tab.B.52.14)

| Ambient Temperature | 10 | 15 | 20 | 25 | 30 | 35 | 40 | 45 | 50 | 55 | 60 |
|---|---|---|---|---|---|---|---|---|---|---|---|
| Correction factor | 1,22 | 1,17 | 1,12 | 1,06 | 1 | 0,94 | 0,87 | 0,79 | 0,71 | 0,61 | 0,5 |

**Minimum power cable cross-sections**

The cross section area of the phase conductor is choosen by checking the voltage drop along the line , through the following equation:

DU% = 1,73*I*L*(R*cos ϕ+X*sen ϕ)/(V*1000)

K= 1.73 for three-phase motors and 2 for single-phase motors
DU% the voltage drop should not be greater than 3%
R, X = cable resistance and reactance in ohms/km (indicated in Table 1)

$\text{sen}\varphi = \sqrt{1-(\cos\varphi)^2}$

In case of star / delta starting the rated current of the motor should be divided by 1.73.

**Determination of minimal sections of the protective conductor PE.**
The minimum cross-section of the PE protective conductor can be determined from Table 3.

Table 3 (CEI 64-8:2007 Tab.54F)

| Phase cross section area S | PE cross section area SPE |
|---|---|
| mm2 | mm2 |
| S ≤ 16 | S |
| 16 < S ≤ 25 | 16 |
| S > 25 | S/2 |

# CS-R

calpeda®

## Control panels

**M COMP** Control panel for 1 single-phase submersible pump

| Pump type | Protector | Capacitor | Motor 220V-240V - 1~ | Dimensions HxBxP |
|---|---|---|---|---|
| | max A | 450Vc | kW | mm |
| M COMP 4-16 | 4,5 | 16 µF | 0,37 | 220x210x110 |
| M COMP 4-20 | 4,5 | 20 µF | 0,55 | 220x210x110 |
| M COMP 5-20 | 5 | 20 µF | 0,55 | 220x210x110 |
| M COMP 5-25 | 5 | 25 µF | 0,55 | 220x210x110 |
| M COMP 6-20 | 6 | 20 µF | 0,75 | 220x210x110 |
| M COMP 6-35 | 6 | 35 µF | 0,9 | 220x210x110 |
| M COMP 7-25 | 7 | 25 µF | 0,9 | 220x210x110 |
| M COMP 7-30 | 7 | 30 µF | 0,9 | 220x210x110 |
| M COMP 8-25 | 8 | 25 µF | 1,1 | 220x210x110 |
| M COMP 8-30 | 8 | 30 µF | 1,1 | 220x210x110 |
| M COMP 10-35 | 10 | 35 µF | 1,1 | 220x210x110 |
| M COMP 10-40 | 10 | 40 µF | 1,1 | 220x210x110 |
| M COMP 12-35 | 12 | 35 µF | 1,5 | 220x210x110 |
| M COMP 12-50 | 12 | 50 µF | 1,5 | 220x210x110 |
| M COMP 12-60 | 12 | 60 µF | 1,5 | 220x210x110 |
| M COMP 16-70 | 16 | 70 µF | 2,2 | 220x210x110 |

**Construction**
Control panel with ON-OFF switch and capacitor for 1 submersible pump with single-phase motor.
Suitable for use with LVBT board for level control.
Protection is provided by means of a main bipolar switch with a phase protected against overload by means of a thermal element.
N.B. Not suitable for pumps with internal capacitor.

**PFC-M** Control panel for 1 submersible pump with single-phase motor, PF control

| Pump type | Protector | Capacitor | Motor 220V-240V - 1~ | Dimensions HxBxP |
|---|---|---|---|---|
| | max A | 450Vc | kW | mm |
| PFC-M 18-16 | 1 - 18 | 16 µF | 0,37 | 220x210x110 |
| PFC-M 18-20 | 1 - 18 | 20 µF | 0,55 | 220x210x110 |
| PFC-M 18-25 | 1 - 18 | 25 µF | 0,55 | 220x210x110 |
| PFC-M 18-30 | 1 - 18 | 30 µF | 0,75 | 220x210x110 |
| PFC-M 18-35 | 1 - 18 | 35 µF | 0,75 | 220x210x110 |
| PFC-M 18-40 | 1 - 18 | 40 µF | 1,1 | 220x210x110 |
| PFC-M 18-50 | 1 - 18 | 50 µF | 1,5 | 220x210x110 |
| PFC-M 18-60 | 1 - 18 | 60 µF | 1,5 | 220x210x110 |
| PFC-M 18-70 | 1 - 18 | 70 µF | 2,2 | 220x210x110 |

**Construction**
Control panel for controlling one submersible pump with single-phase motor.
Electronic control of the operation and dryrunning protection through the power factor (PF) control.
The installation of level probes into the well is not required.
It stops the pump in case of lack of air cushion in the pressure vessel (patented system).
Displayed operating data and alarms available in four languages.
N.B. Not suitable for pumps with internal capacitor and float mounted on the pump.

**QML/A 1 D** Control panel for 1 pump with single-phase motor, direct starting

| Pump type | Motor 230V - 1~ | Setting | Dimensions HxBxP |
|---|---|---|---|
| | kW | A | mm |
| QML/A 1 D 12A-FA | 0,25 - 1,5 | 1 - 12 | 250x205x115 |
| QML/A 1 D 12A-FA 20 | 0,25 - 1,5 | 1 - 12 | 250x205x115 |
| QML/A 1 D 12A-FA 25 | 0,25 - 1,5 | 1 - 12 | 250x205x115 |
| QML/A 1 D 3 FT | 2,2 - 3 | 13 - 18 | 400x300x160 |

**Construction**
Control panel for 1 pump with single-phase motor, direct starting for pressure booster sets, with a patented working time-measuring system that stops the pump in case of lack of air cushion in the pressure vessel
Dry-running protection with float switch.
Arranged for the capacitor internal connection (for pumps without built-in capacitor).
Pump operation controlled by an electronic card type MPS 3000 with microprocessor which allows three different modes of operation of the pump: standard, emergency and timed.

**T COMP** Control panel for 1 submersible pump with three-phase motor

| Pump type | Protector | Motor 230V - 3~ | Motor 400V - 3~ | Dimensions HxBxP |
|---|---|---|---|---|
| | A | kW | kW | mm |
| T COMP 8 | 1 ÷ 8 | 0,37 ÷ 1,5 | 0,5 ÷ 2,2 | 170x145x85 |
| T COMP 10 | 7 ÷ 10 | --- | 3 ÷ 3,7 | 230x180x155 |
| T COMP 12 | 9 ÷ 12 | 2,2 | 4 | 230x180x155 |
| T COMP 16 | 11 ÷ 16 | 3 | 5,5 | 230x180x155 |
| T COMP 20 | 14 ÷ 20 | 3,7 - 4 | 7,5 | 230x180x155 |

**Construction**
Control panel and protection for 1 pump with three-phase motor.
Arranged for the LVBT level control internal connection against dry running (T COMP8 model has the level control as a standard).
Control pumps with pressure switch and float-type switch.

# CS-R

## Control panels

**PFC-T** Control panel for 1 submersible pump with three-phase motor, PF control

| Pump type | Protector | Motor 230V - 3~ | Motor 400V - 3~ | Dimensions HxBxP | kg |
|---|---|---|---|---|---|
| | A | kW | kW | mm | |
| PFC-T 16/A | 1 - 16 | 0,37 - 5,5 | 250x205x105 | 1,7 | 1,7 |

**Construction**
Control panel for controlling 1 pump with three-phase motor. Electronic control of the operation and dry-running protection through the power factor (PF) control.
It stops the pump in case of lack of air cushion in the pressure vessel (patented system).
Displayed operating data and alarms available in four languages.

**QTL/A 1 D** Control panel for 1 pump with three-phase motor, direct starting

| Pump type | Motor 400V - 3~ | Setting | Dimensions HxBxP |
|---|---|---|---|
| | kW | A | mm |
| QTL/A 1 D 12A-FA | 0,25 - 5,5 | 1 - 12 | 250x205x105 |
| QTL/A 1 D 7,5 FT | 7,5 | 13 - 18 | 400x300x160 |
| QTL/A 1 D 9,2 FT | 9,2 | 17 - 23 | 400x300x160 |
| QTL/A 1 D 11 FT | 11 | 20 - 25 | 400x300x160 |

**Construction**
Control panel for 1 pump with three-phase motor, direct starting for pressure booster sets, with a patented working time-measuring system that stops the pump in case of lack of air cushion in the pressure vessel.
Dry-running protection with float switch.
Pump operation controlled by an electronic card type MPS 3000 with microprocessor which allows three different modes of operation of the pump: standard, emergency and timed.

**QTL 1 D FTE** Control panel for 1 pump with three-phase motor, direct starting

| Pump type | Motor 400V - 3~ | Setting | Dimensions HxBxP |
|---|---|---|---|
| | kW | A | mm |
| QTL 1 D 4 FTE | 4 | 6,3 - 10 | 400x300x160 |
| QTL 1 D 5,5 FTE | 5,5 | 9 - 12 | 400x300x160 |
| QTL 1 D 7,5 FTE | 7,5 | 13 - 18 | 400x300x160 |
| QTL 1 D 9,2 FTE | 9,2 | 17 - 23 | 400x300x160 |
| QTL 1 D 11 FTE | 11 | 20 - 25 | 400x300x160 |
| QTL 1 D 15 FTE | 15 | 24 - 32 | 500x350x200 |
| QTL 1 D 18,5 FTE | 18,5 | 32 - 38 | 500x350x200 |
| QTL 1 D 22 FTE | 22 | 35 - 50 | 500x350x200 |
| QTL 1 D 30 FTE | 30 | 46 - 65 | 500x350x200 |

**Construction**
Electromechanical control panel for 1 pump with three-phase motor, direct starting.
Operating signals by E 1000 led card.
Dry-running protection with float switch.

**QTL/A 1 ST FT** Control panel for 1 pump with three-phase motor, Y/Δ starting

| Pump type | Motor 400V - 3~ | | Dimensions HxBxP |
|---|---|---|---|
| | Rated motor power | Current | |
| | kW | A | mm |
| QTL/A 1 ST 5,5 FT | 5,5 | 11 - 15 | 600x400x200 |
| QTL/A 1 ST 7,5 FT | 7,5 | 12 - 17 | 600x400x200 |
| QTL/A 1 ST 11 FT | 9,2 - 11 | 16 - 24 | 600x400x200 |
| QTL/A 1 ST 15 FT | 15 | 23 - 31 | 600x400x200 |
| QTL/A 1 ST 18,5 FT | 18,5 | 30 - 39 | 600x400x200 |
| QTL/A 1 ST 22 FT | 22 | 35 - 43 | 700x500x200 |
| QTL/A 1 ST 30B FT | 30 | 42 - 55 | 700x500x200 |
| QTL/A 1 ST 30A FT | 30 | 55 - 65 | 700x500x200 |
| QTL/A 1 ST 37 FT | 37 | 61 - 84 | 800x600x250 |
| QTL/A 1 ST 45 FT | 45 | 80 - 105 | 800x600x250 |

**Construction**
Electromechanical control panel for 1 submersible pump with three-phase motor, with Stator Impedence starter.
Pump operation controlled by an electronic card type MPS 3000 with microprocessor with different pump operating modes.
Dry-running protection with float switch or level control probes.

# CS-R

calpeda

## Control panels

**QTL 1 ST FTE** Control panel for 1 pump with three-phase motor, Y/Δ starting

| Pump type | Motor 400V - 3~ | | Dimensions |
|---|---|---|---|
| | Rated motor power | Current | HxBxP |
| | kW | A | mm |
| QTL 1 ST 5,5 FTE | 5,5 | 11 - 15 | 500x350x200 |
| QTL 1 ST 7,5 FTE | 7,5 | 12 - 17 | 500x350x200 |
| QTL 1 ST 11 FTE | 9,2 - 11 | 16 - 24 | 500x350x200 |
| QTL 1 ST 15 FTE | 15 | 23 - 31 | 500x350x200 |
| QTL 1 ST 18,5 FTE | 18,5 | 30 - 39 | 500x350x200 |
| QTL 1 ST 22 FTE | 22 | 35 - 43 | 600x400x200 |
| QTL 1 ST 30B FTE | 30 | 42 - 55 | 600x400x200 |
| QTL 1 ST 30A FTE | 30 | 55 - 65 | 600x400x200 |
| QTL 1 ST 37 FTE | 37 | 61 - 84 | 700x500x200 |
| QTL 1 ST 45 FTE | 45 | 80 - 105 | 700x500x200 |
| QTL 1 ST 55 FTE | 55 | 100 - 125 | 700x500x200 |
| QTL 1 ST 75 FTE | 75 | 120 - 160 | 800x600x250 |
| QTL 1 ST 92 FTE | 92 | 140 - 198 | 800x600x250 |
| QTL 1 ST 110 FTE | 110 | 180 - 250 | 800x600x250 |

**Construction**
Electromechanical control panel for 1 pump with three-phase motor, Y/Δ starting.
Operating signals by E 1000 led card.
Dry-running protection with float switch.

**QTL 1 SS E** Control panel for 1 pump with three-phase motor, start/stop with soft starter

| Pump type | Motor 400V - 3~ | | Dimensions |
|---|---|---|---|
| | Rated motor power | Current | HxBxP |
| | kW | A | mm |
| QTL 1 SS 7,5 E | 7,5 | 17 | 700x500x250 |
| QTL 1 SS 9,2 E | 9,2 | 22 | 700x500x250 |
| QTL 1 SS 15 E | 11 - 15 | 34 | 700x500x250 |
| QTL 1 SS 22 E | 18,5 - 22 | 48 | 700x500x250 |
| QTL 1 SS 26 E | 26 | 58 | 900x600x300 |
| QTL 1 SS 30 E | 30 | 68 | 900x600x300 |
| QTL 1 SS 37 E | 37 | 82 | 900x600x300 |
| QTL 1 SS 45 E | 45 | 92 | 900x600x300 |
| QTL 1 SS 55 E | 55 | 114 | 900x600x300 |
| QTL 1 SS 63 E | 63 | 126 | 1100x700x300 |
| QTL 1 SS 75 E | 75 | 150 | 1100x700x300 |
| QTL 1 SS 92 E | 92 | 196 | 1200x800x400 |
| QTL 1 SS 110 E | 110 | 231 | 1200x800x400 |
| QTL 1 SS 132 E | 132 | 245 | 1200x800x400 |

**Construction**
Control panel for 1 pump with three-phase motor, start/stop with soft starter
Operating signals by E 1000 led card.
Application: control of submersible motor with great cable length and surface motors.
Dry-running protection with float switch.

**QTL 1 IS FTE** Control panel for 1 pump with three-phase motor, with Stator Impedence starter

| Pump type | Motor 400V - 3~ | | Dimensions |
|---|---|---|---|
| | Rated motor power | Current | HxBxP |
| | kW | A | mm |
| QTL 1 IS 5,5 FTE-2RL | 5,5 | 11 - 15 | |
| QTL 1 IS 7,5 FTE-2RL | 7,5 | 12 - 17 | |
| QTL 1 IS 11 FTE-2RL | 9,2 - 11 | 16 - 24 | |
| QTL 1 IS 15 FTE-2RL | 15 | 23 - 31 | |
| QTL 1 IS 18,5 FTE-2RL | 18,5 | 30 - 39 | |
| QTL 1 IS 22 FTE-2RL | 22 | 35 - 43 | |
| QTL 1 IS 30 FTE-2RL | 30 | 42- 65 | |
| QTL 1 IS 37 FTE-2RL | 37 | 61 - 84 | |
| QTL 1 IS 45 FTE-2RL | 45 | 80 - 105 | |
| QTL 1 IS 55 FTE-2RL | 55 | 100 - 125 | |
| QTL 1 IS 75 FTE-2RL | 75 | 120 - 160 | |
| QTL 1 IS 92 FTE-2RL | 92 | 140 - 198 | |
| QTL 1 IS 110 FTE-2RL | 110 | 180 - 250 | |

**Construction**
Electromechanical control panel for 1 submersible pump with three-phase motor, with Stator Impedence starter.
Operating signals by E 1000 led card.
Application : submersible motors control with great cable length.

# CS-R

## Control panels

**QML 1 VFT** Control panel for 1 pump with variable speed three-phase motor

| Pump type | Motor 400V - 3~ | | Dimensions |
|---|---|---|---|
| | Rated motor power | Current | HxBxP |
| | kW | A | mm |
| QML 1 VFT 0,4 | 0,37 - 0,45 | 2,6 | 500x350x200 |
| QML 1 VFT 0,75 | 0,55 - 0,75 | 4 | 500x350x200 |
| QML 1 VFT 1,5 | 1,1 - 1,5 | 7,1 | 500x350x200 |
| QML 1 VFT 2,2 | 2,2 | 10 | 500x350x200 |

**Construction**
Single-phase mains supply control panel with frequency converter for 1 pump with three-phase variable speed motor, for constant pressure booster sets.
Arranged for SRL 3 level control application for probes connection against dry-running.
Pump operation controlled by an electronic board type MPS 4000 with microprocessor.

**QTL 1 VFT** Control panel for 1 pump with variable speed three-phase motor

| Pump type | Motor 400V - 3~ | | Dimensions |
|---|---|---|---|
| | Rated motor power | Current | HxBxP |
| | kW | A | mm |
| QTL 1 VFT 0,4 | 0,4 | 1,5 | 500x350x200 |
| QTL 1 VFT 0,75 | 0,55 - 0,75 | 2,3 | 500x350x200 |
| QTL 1 VFT 1,5 | 1,1 - 1,5 | 4,1 | 500x350x200 |
| QTL 1 VFT 2,2 | 2,2 | 5,5 | 500x350x200 |
| QTL 1 VFT 4 | 3 - 4 | 9,5 | 500x350x200 |
| QTL 1 VFT 5,5 | 5,5 | 14,3 | 600x400x250 |
| QTL 1 VFT 7,5 | 7,5 | 17 | 600x400x250 |
| QTL 1 VFT 11 | 9,2 - 11 | 27,7 | 700x500x250 |
| QTL 1 VFT 15 | 15 | 33 | 700x500x250 |
| QTL 1 VFT 18,5 | 18,5 | 46,3 | 800x600x250 |
| QTL 1 VFT 22 | 22 | 61,5 | 800x600x250 |
| QTL 1 VFT 30 | 30 | 74,5 | 900x600x250 |
| QTL 1 VFT 37 | 37 | 88 | 1100x700x300 |
| QTL 1 VFT 45 | 45 | 106 | 1200x800x300 |
| QTL 1 VFT 55 | 55 | 145 | 1200x800x300 |
| QTL 1 VFT 75 | 75 | 173 | 1200x800x300 |

**Construction**
Control panel with frequency converter for 1 pump with three-phase variable speed motor, for constant pressure booster sets.
Arranged for SRL 3 level control application for probes connection against dry-running.
Pump operation controlled by an electronic board type MPS 4000 with microprocessor.

## Cooling jacket

When the submersible motor is installed:
below the well inlet points (picture A)
in tanks, lakes, basins, etc… (pictures B) an external jacket must be installed to create a cooling flow around the motor. Only in this way a safe operation can be assured avoiding any overheating which can

Fig. A

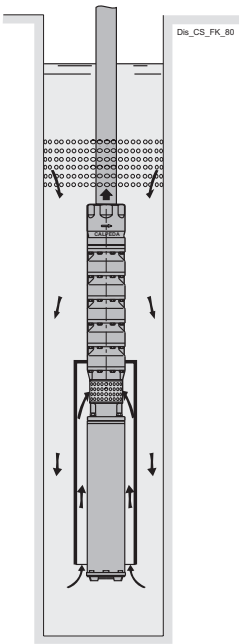


Fig. B

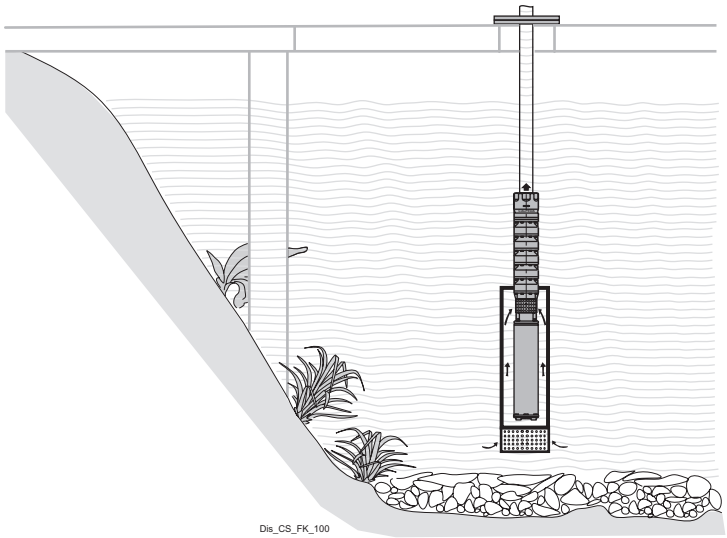

## NCE EI
**Energy-efficient electronic circulators**

Page 586

## NCE H2
**Energy-efficient electronic circulators**

Page 590

## NCE HQ2
**Energy-efficient electronic circulators with flanged ports**

Page 596

## NCE EL
**Energy-efficient electronic circulators for solar systems**

Page 602

## NCE ES
**Energy-efficient electronic circulators for hot sanitary water**

Page 605

## NCE PS2
**Energy-efficient electronic circulators for hot sanitary water**

Page 608

## NCS3
**3-speed circulator  for hot sanitary water**

Page 611

# NCE EI

## Coverage chart n ≈ 2900 rpm

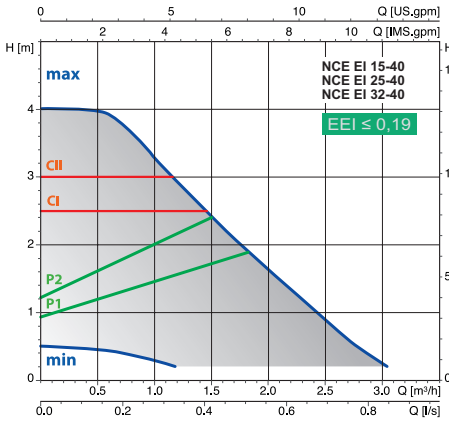


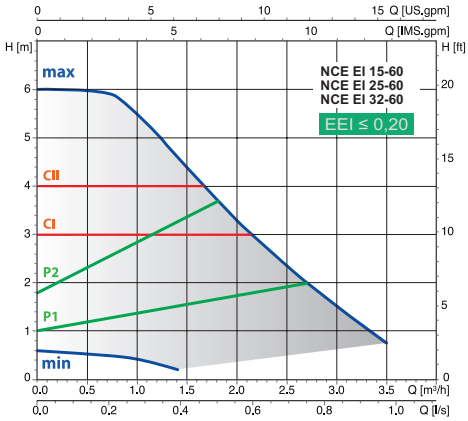


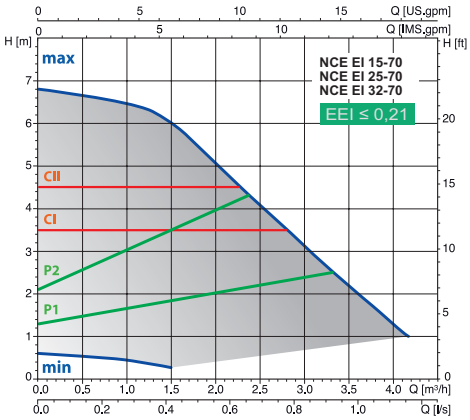


CI-CII constant curve P1-P2 proportional curve min-max n fixed curves

# Energy saving Circulating Pumps with frequency converter

# NCE EI

## Construction

Energy saving variable speed circulating pump driven by a permanent magnet synchronous motor (pm) controlled by on board inverter.

## Applications

Small domestic heating systems.
Floor heating systems.

## Operating conditions

- Liquid temperature from +2 °C to +95 °C
- Ambient temperature from 0 °C to +40 °C
- Maximum permissible working pressure: 6 bar
- Storage: -20°C/+70°C max. relative humidity 95% at 40 °C
- Certifications: in conformity with CE requirements
- Sound pressure ≤ 43 dB (A).
- Minimum suction pressure: 0,3 bar at 50 °C 1,0 bar at 95 °C
- Maximum glycol quantity: 40%
- EMC according to: EN 55014-1, EN 61000-3-2, EN 55014-2
- Connections: threaded ports ISO 228: G 1, G 1 1/2, G 2
- The benchmark for most efficient circulators is EEI ≤ 0,20.
- Minimun power: 3 W.

## Motor

- Synchronous motor with permanent magnet.

Motor: variable speed
- Standard voltage: single-phase 230 V (-10%;+6%)
- Frequency: 50-60 Hz
- Protection: IP 44
- Insulation class: H
- Class II appliance
- Overload protection (integrated).
  1) automatic protection with electronic rotor release
  2) Overload thermal protector
- Cable: phases and neutral.
- Constructed in accordance with EN 60335-1, EN 60335-2-51.

## Special features on request

Brass or cast iron unions.
EPP thermal insulation shell.

## Designation

**NCE EI 32 - 60 / 180**
**NCE** = Series
**EI** = Version
**32** = DN ports in mm
**60** = Max. head in dm
**180** = connection size mm

## Features

**Compact design**
The space saving NCE EI is a very compact circulating pump, allows inr easy installation in small domestic heating systems.
**Easy to install and to adjust**
Installing the NCE EI is considerably simplified by the quick setting and power installation plug.
**Reliable**
Like all our electronic circulating pumps, the NCE EI features the patented self-cleaning square chamber design, which eliminates any possibility of rotor blockage.
Ceramic shaft
Hydraulics components are completely painted with cataphoresis.
Program for automatic venting and unblocking routines.
**Easy use**
Operating range with fixed curves from 0,5 m to 7 m; possibility to choose 2 (1-2) proportional pressure curves and 2 (I-II) constant pressure curves.

## Materials

| Component | Material |
|---|---|
| Pump casing | Cast iron GJL 200 EN 1561 |
| Impeller | Composite |
| Shaft | Ceramic |
| Ball bearings | Carbon |
| Thrust bearing | Ceramic |
| Rotor | Composite / Ferrite |
| Winding | Copper wire |
| Electronic card | - |
| Gasket | EPDM |

# NCE EI

## Operating modes

PROPORTIONAL CURVE PROGRAMMING Δp-v
(GREEN LED)
Moving the switch to 1 or 2 setting, the pump operates with the proportional curve.
This mode ensures maximum energy efficiency.

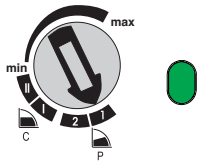


CONSTANT CURVE PROGRAMMING Δp-c
(ORANGE LED)
Moving the switch to I or II setting, the pump operates with a constant curve according to the selected flow rates.

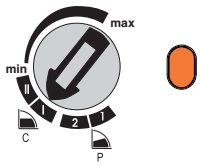


MANUAL PROGRAMMING
(BLUE LED)
Setting the switch in any position between the MIN and MAX points, the most suitable operating curve for the installation is manually selected.

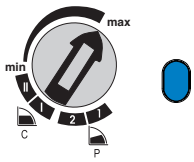


WARNING!
- The red LED indicates that the pump is not rotating but is still under tension.
- White flashing LED : plant degassing requirement, air in the system.

## Dimensions and weights

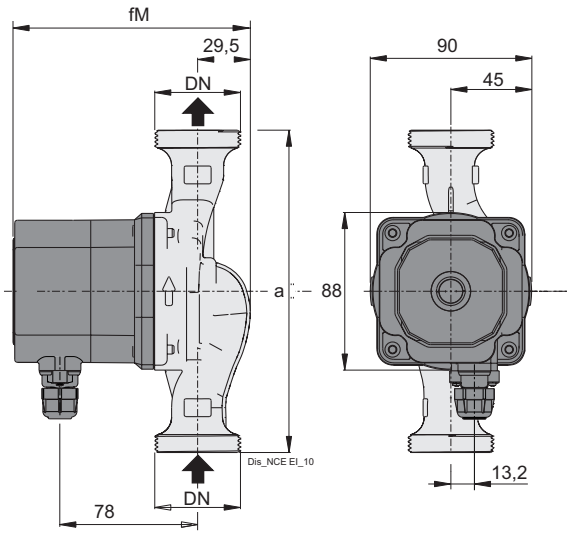


| TYPE | DN | 230V | 230V | P1 | P1 | mm | mm | kg |
|---|---|---|---|---|---|---|---|---|
| | | A max | A min | W max | W min | fm | a | |
| NCE EI 15-40/130 | G 1 | 0,17 | 0,03 | 22 | 3 | 134 | 130 | 1,67 |
| NCE EI 25-40/130 | G 1 1/2 | 0,17 | 0,03 | 22 | 3 | 134 | 130 | 1,81 |
| NCE EI 25-40/180 | G 1 1/2 | 0,17 | 0,03 | 22 | 3 | 134 | 180 | 1,96 |
| NCE EI 32-40/180 | G 2 | 0,17 | 0,03 | 22 | 3 | 134 | 180 | 2,10 |
| NCE EI 15-60/130/A | G 1 | 0,33 | 0,03 | 42 | 3 | 134 | 130 | 1,67 |
| NCE EI 25-60/130/A | G 1 1/2 | 0,33 | 0,03 | 42 | 3 | 134 | 130 | 1,81 |
| NCE EI 25-60/180/A | G 1 1/2 | 0,33 | 0,03 | 42 | 3 | 134 | 180 | 1,96 |
| NCE EI 32-60/180/A | G 2 | 0,33 | 0,03 | 42 | 3 | 134 | 180 | 2,10 |
| NCE EI 15-70/130 | G 1 | 0,44 | 0,03 | 56 | 3 | 144 | 130 | 1,91 |
| NCE EI 25-70/130 | G 1 1/2 | 0,44 | 0,03 | 56 | 3 | 144 | 130 | 2,05 |
| NCE EI 25-70/180 | G 1 1/2 | 0,44 | 0,03 | 56 | 3 | 144 | 180 | 2,20 |
| NCE EI 32-70/180 | G 2 | 0,44 | 0,03 | 56 | 3 | 144 | 180 | 2,34 |

## Unions (on request)

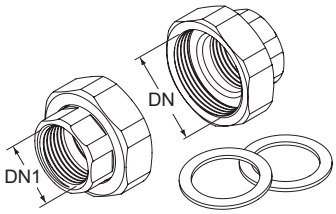


| TYPE | DN | DN1 |
|---|---|---|
| KIT G 1 - G 1/2 (NCE . 15..) | G 1 | G 1/4 |
| KIT G 1 1/2 - G 1 (NCE . 25..) | G 1 1/2 | G 1 |
| KIT G 2 - G 1 1/4 (NCE . 32..) | G 2 | G 1 1/4 |

## Examples of installations

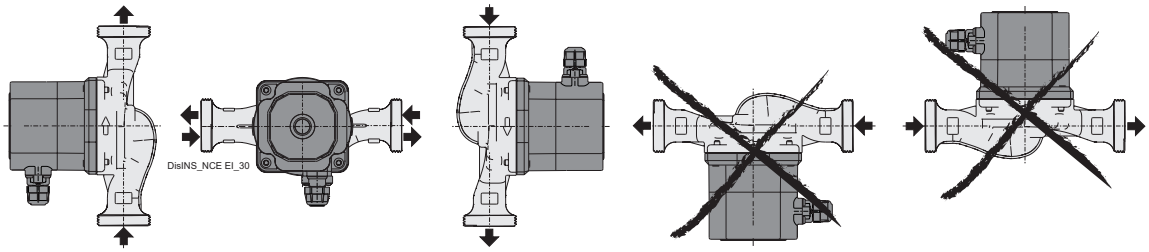


## Terminal box arrangement (on request)

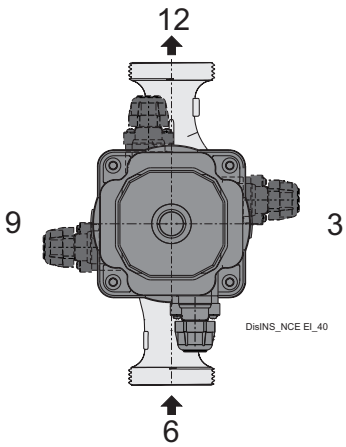

# NCE H2

calpeda

## Coverage chart

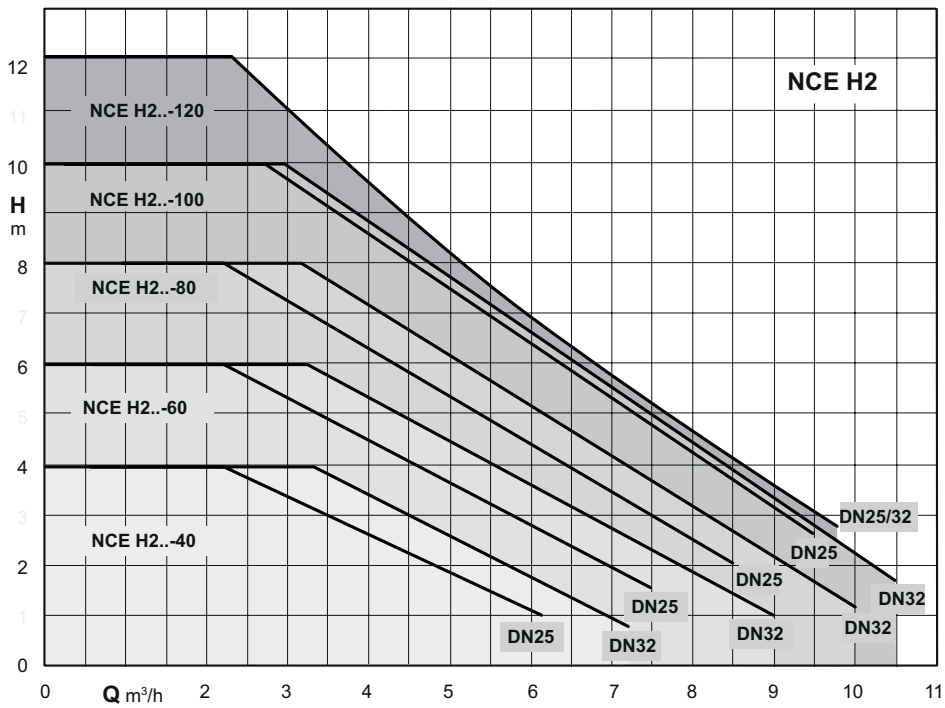


# Energy saving Circulating Pumps with frequency converter

# NCE H2

calpeda®

## Construction

Energy saving variable speed circulating pump driven by a permanent magnet synchronous motor (pm) controlled by on board inverter.

Standard with steel unions with cataphoresis treatment.

## Applications

The energy-efficient circulation pump is designed for water circulation in heating systems.
Underfloor heating systems
Single-pipe systems
Two-pipe systems
Pumping liquid:
Clean, non-aggressive and non-expolosive liquids, not containing solid particles, fibers or mineral/vegetable oil
In heating systems, water must meet the requirements of accepted standards of water quality in heating systems.

## Operating conditions

- Liquid temperature from -10 °C to +110 °C
- Ambient temperature from 0 °C to +40 °C
- Maximum permissible working pressure: 10 bar
- Storage: -10°C/+50°C max. relative humidity 95% at 40 °C
- Certifications: in conformity with CE requirements
- Sound pressure ≤ 45 dB (A).
- Max. quantity of ethylene glycol: 40%
- EMC according to: EN 55014-1, EN 55014-2, EN 61000-3-2, EN 61000-3-3.
- Connections: threaded ports ISO 228: G 1 1/2, G 2.
- Flanged connection DN 32 PN 10
- The energy efficiency index of circulators is IEE ≤ 0.23.
- The benchmark for most efficient circulators is EEI ≤ 0,20.

## Motor

- Synchronous motor with permanent magnet.
Motor: variable speed
- Standard voltage: single-phase 230 V (-10%;+6%)
- Frequency: 50-60 Hz
- Protection: IP 44
- Insulation class: F
- Overload protection (integrated).
- Cable: phases and neutral.
- Constructed in accordance with: EN 60335-1, EN 60335-2-51.

## Designation

**NCE H2 32 F - 100 / 180**
**NCE** = Series
**H2** = Version
**32** = DN ports in mm
**F** = Flanged connection
**100** = Max. head in dm
**180** = connection size mm

## Materials

| Component | Material |
|---|---|
| Pump casing | Cast iron with cataphoresis coating |
| Impeller | Composite PES |
| Shaft | Ceramic |
| Ball bearings | Ceramic |
| Thrust bearing | Graphite carbon |
| Rotor | Stainless steel jacket |
| Electronic card | .. |

## Operating modes

Automatic mode
(factory setting):
In this mode the pump automatically sets the operating pressure, depending on the hydraulic system. This mode is recommended in most systems.

Proportional pressure mode:
The circulator changes the pressure propotionally to the current flow.
The pressure value can be adjusted on three curves.

Constant pressure mode:
The circulator mantains the pressure constant when the reference flow changes.
The pressure value can be adjusted on three curves.

Fixed speed mode:
The circulator works with constant curve and the curve could be changed over three curves.

Night mode:.
The pump is changed to an automatic deceleration curve at night, so that it runs at low performance and low energy consumption.

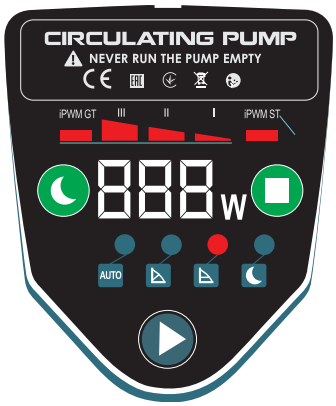


The circulator can operate in:
- automatic mode
- proportional pressure mode
- constant pressure mode
- fixed speed mode
- night mode

# NCE H2

## Characteristic curves

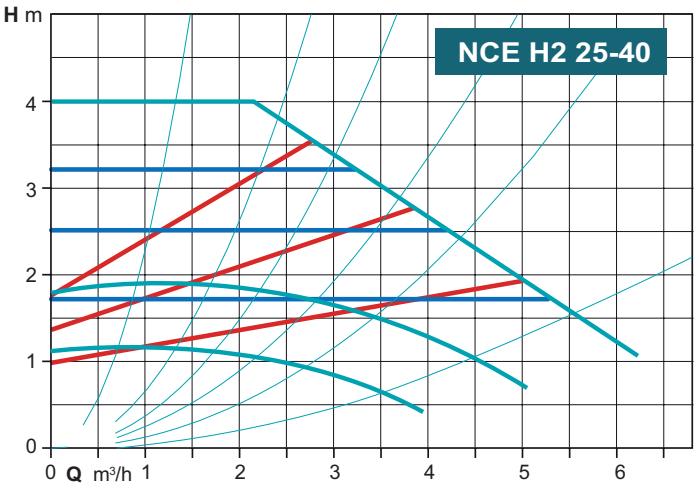


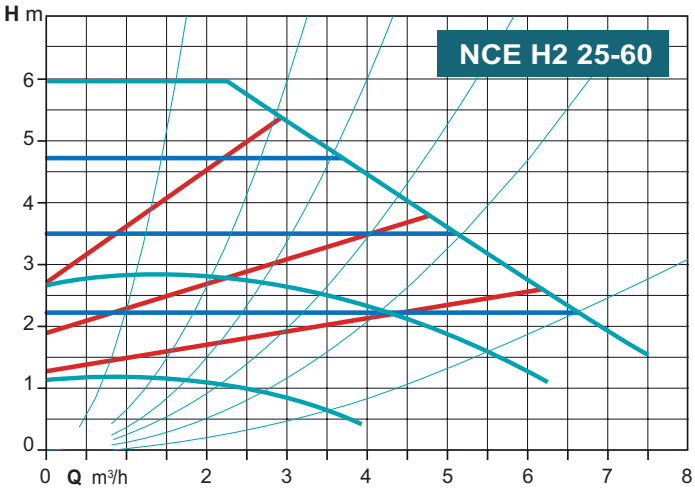


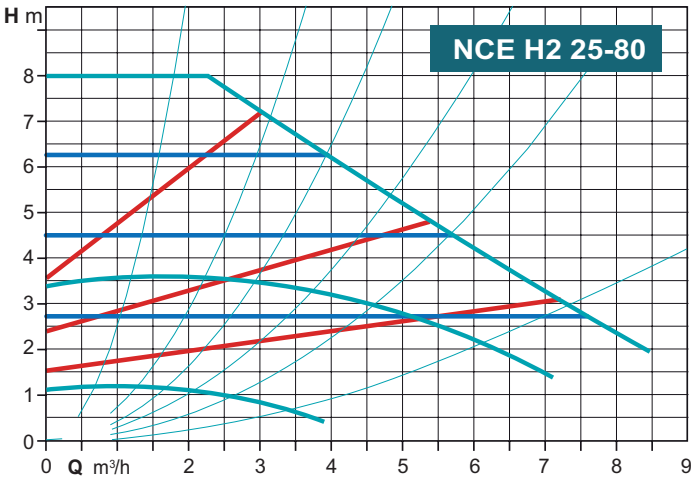


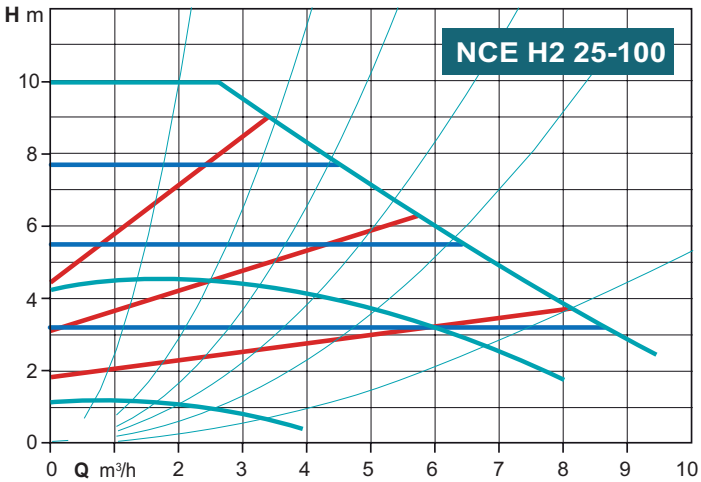


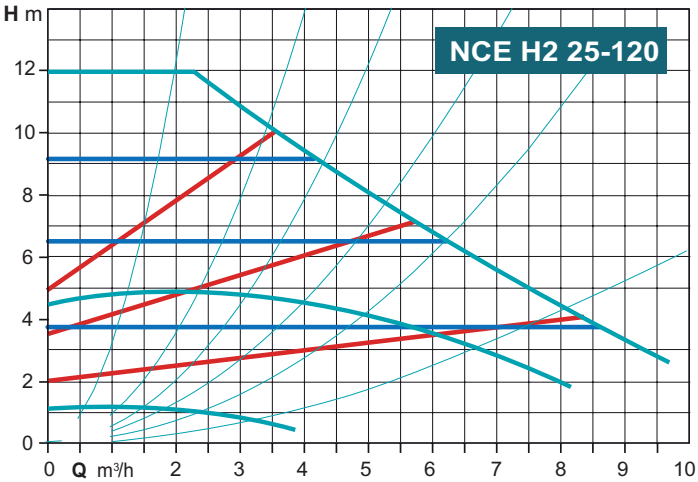


Proportional pressure | Constant pressure | Constant speed

# NCE H2

## Characteristic curves

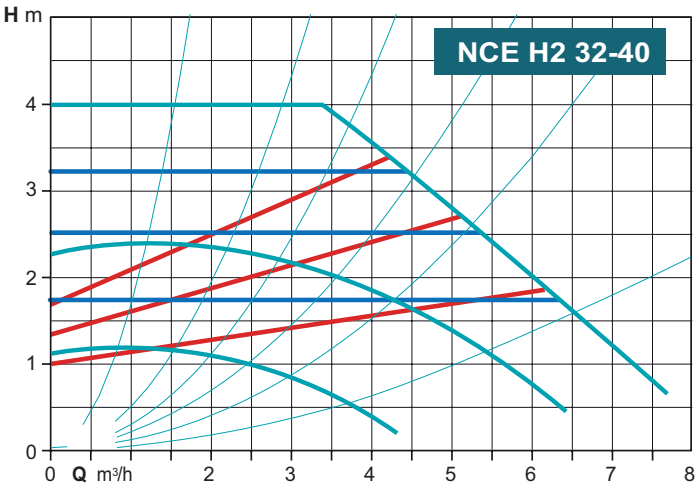


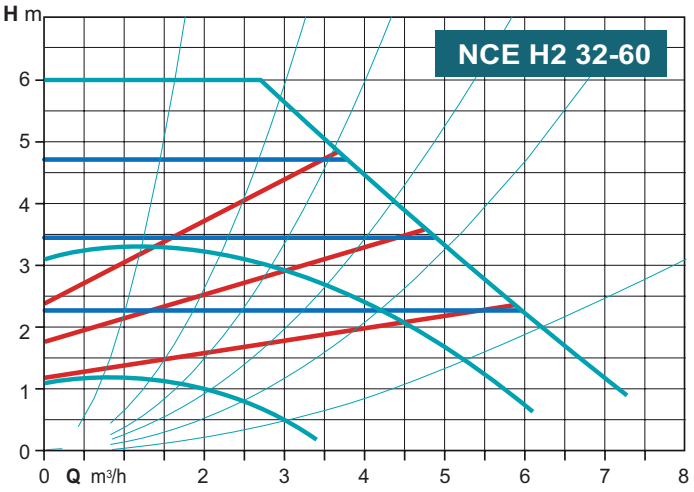


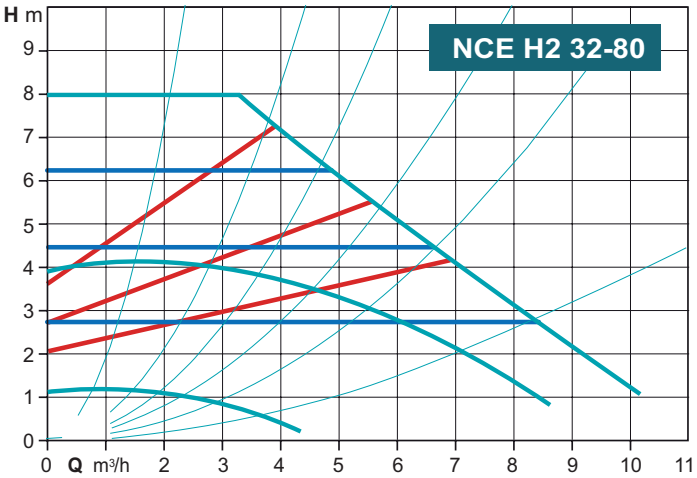


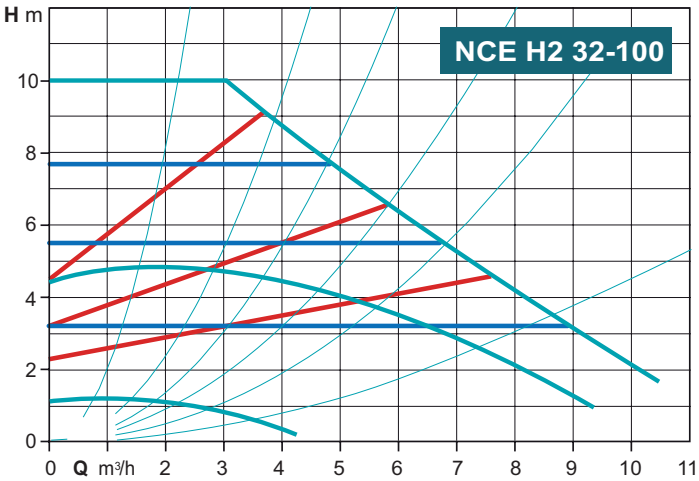


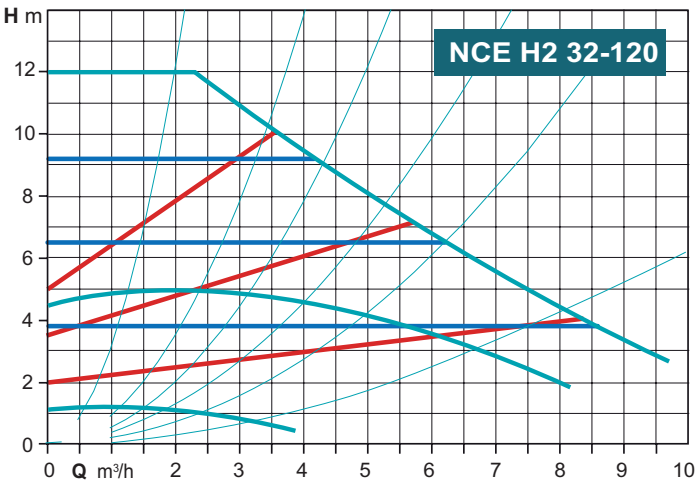


Proportional pressure | Constant pressure | Constant speed

# NCE H2

## Characteristic curves

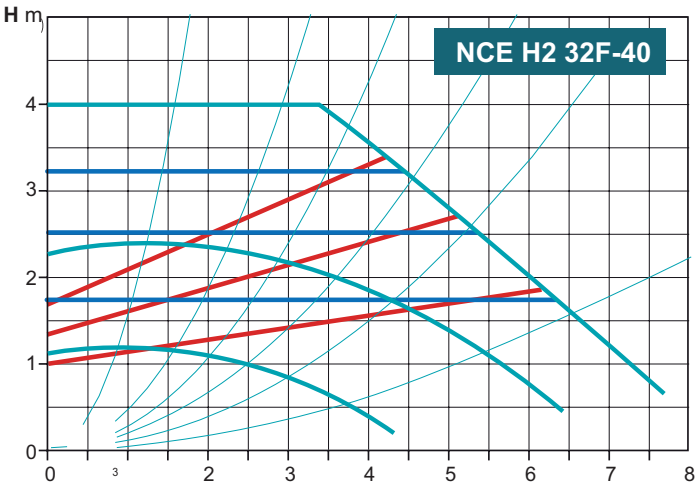


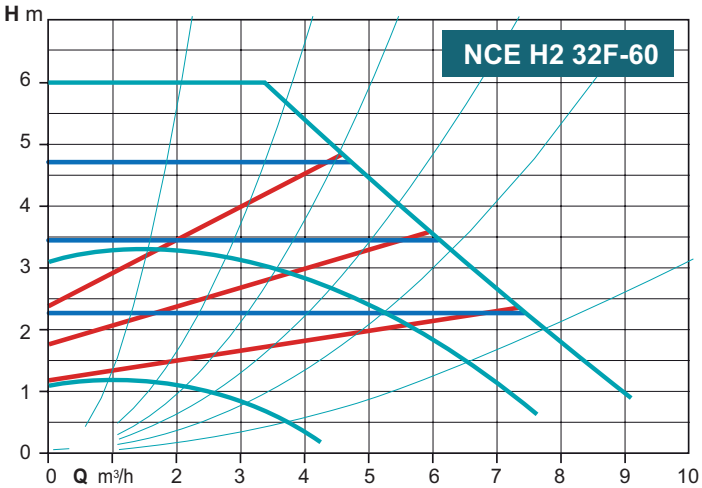


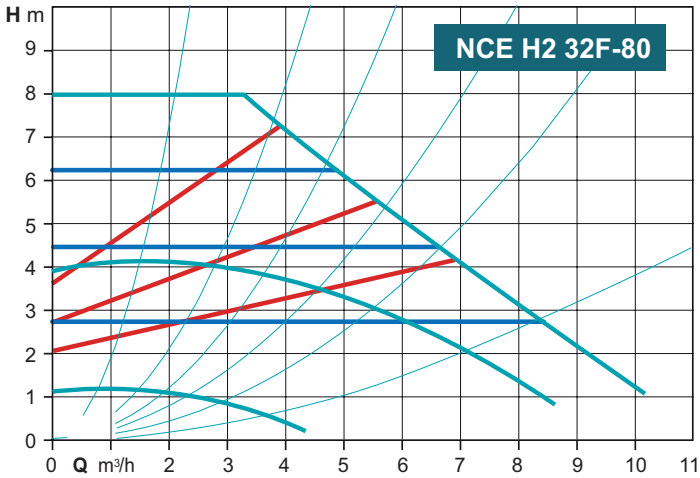


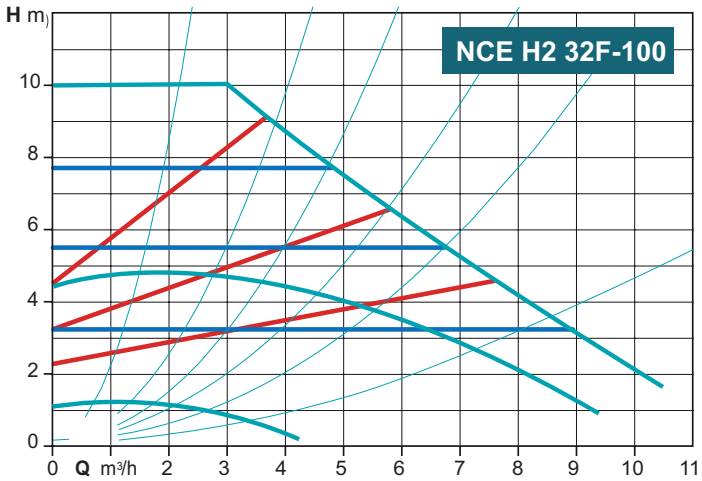


Proportional pressure Constant pressure Constant speed

# NCE H2

## Dimensions and weights

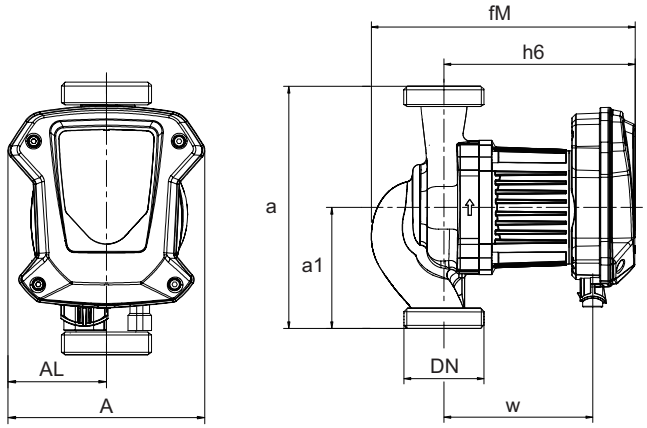


## Unions

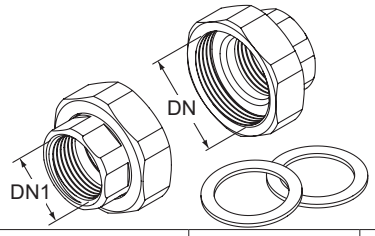


| TYPE | DN | DN1 |
|---|---|---|
| KIT G 1 1/2 - G 1 (NCE . 25..) | G 1 1/2 | G 1 |
| KIT G 2 - G 1 1/4 (NCE . 32..) | G 2 | G 1 1/4 |

| TYPE | DN | H max | Q max | 1~ 230 V | P1 | P1 | mm | mm | mm | mm | mm | mm | mm | kg |
|---|---|---|---|---|---|---|---|---|---|---|---|---|---|---|
| | | m | m3/h | A max | W min | W max | a | a1 | fM | A | AL | h6 | w | kg |
| NCE H2 25-40/180 | G 1 1/2 | 4 | 6.2 | 0.23 | 9 | 60 | 180 | 90 | 196 | 130 | 65 | 142 | 110.5 | 4 |
| NCE H2 32-40/180 | G 2 | 4 | 7.7 | 0.3 | 9 | 78 | 180 | 90 | 196 | 130 | 65 | 142 | 110.5 | 4.4 |
| NCE H2 25-60/180 | G 1 1/2 | 6 | 7,5 | 0.41 | 9 | 105 | 180 | 90 | 196 | 130 | 65 | 142 | 110.5 | 4 |
| NCE H2 32-60/180 | G 2 | 6 | 9.1 | 0.46 | 9 | 120 | 180 | 90 | 196 | 130 | 65 | 142 | 110.5 | 4.4 |
| NCE H2 25-80/180 | G 1 1/2 | 8 | 8.5 | 0.58 | 9 | 150 | 180 | 90 | 196 | 130 | 65 | 142 | 110.5 | 4 |
| NCE H2 32-80/180 | G 2 | 8 | 10.1 | 0.65 | 9 | 168 | 180 | 90 | 196 | 130 | 65 | 142 | 110.5 | 4.4 |
| NCE H2 25-100/180 | G 1 1/2 | 10 | 9.4 | 0.78 | 9 | 200 | 180 | 90 | 196 | 130 | 65 | 142 | 110.5 | 4 |
| NCE H2 32-100/180 | G 2 | 10 | 10.5 | 0.76 | 9 | 200 | 180 | 90 | 196 | 130 | 65 | 142 | 110.5 | 4.4 |
| NCE H2 25-120/180 | G 1 1/2 | 12 | 9.7 | 0.86 | 9 | 220 | 180 | 90 | 196 | 130 | 65 | 142 | 110.5 | 4 |
| NCE H2 32-120/180 | G 2 | 12 | 9.7 | 0.84 | 9 | 220 | 180 | 90 | 196 | 130 | 65 | 142 | 110.5 | 4.4 |

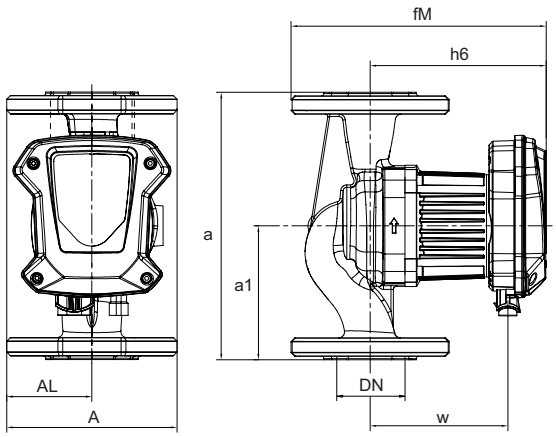


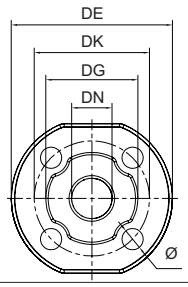


| mm | | | | | |
|---|---|---|---|---|---|
| DN | DE | DK | DG | Holes | |
| | | | | N° | ø |
| 32 | 140 | 100 | 80 | 4 | 19 |

| TYPE | DN | H max | Q max | 1~ 230 V | P1 | P1 | mm | mm | mm | mm | mm | mm | mm | kg |
|---|---|---|---|---|---|---|---|---|---|---|---|---|---|---|
| | | m | m3/h | A max | W min | W max | a | a1 | fM | A | AL | h6 | w | kg |
| NCE H2 32F-40/220 | 32 | 4 | 7.7 | 0.3 | 9 | 78 | 220 | 110 | 210 | 140 | 70 | 145 | 113 | 7.3 |
| NCE H2 32F-60/220 | 32 | 6 | 9.1 | 0.46 | 9 | 120 | 220 | 110 | 210 | 140 | 70 | 145 | 113 | 7.3 |
| NCE H2 32F-80/220 | 32 | 8 | 10.1 | 0.65 | 9 | 168 | 220 | 110 | 210 | 140 | 70 | 145 | 113 | 7.3 |
| NCE H2 32F-100/220 | 32 | 10 | 10.5 | 0.79 | 9 | 200 | 220 | 110 | 210 | 140 | 70 | 145 | 113 | 7.3 |

## Examples of installations

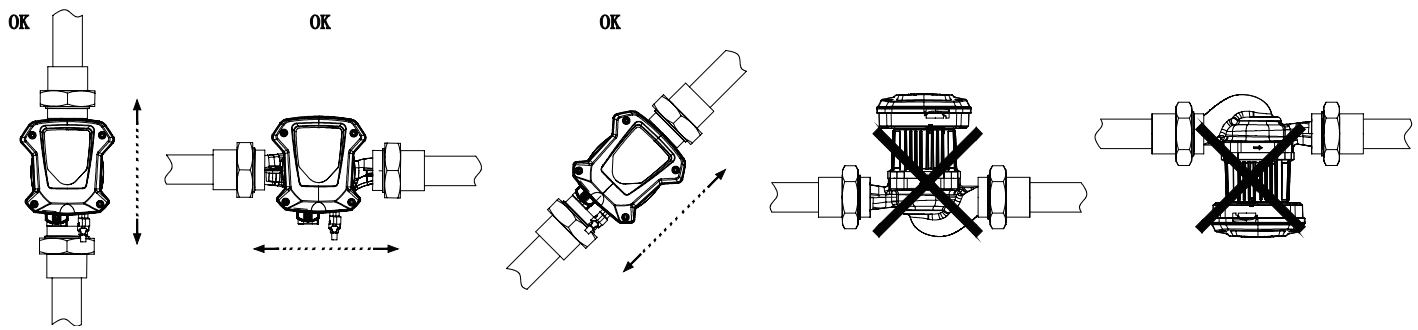

# NCE HQ2

## Coverage chart

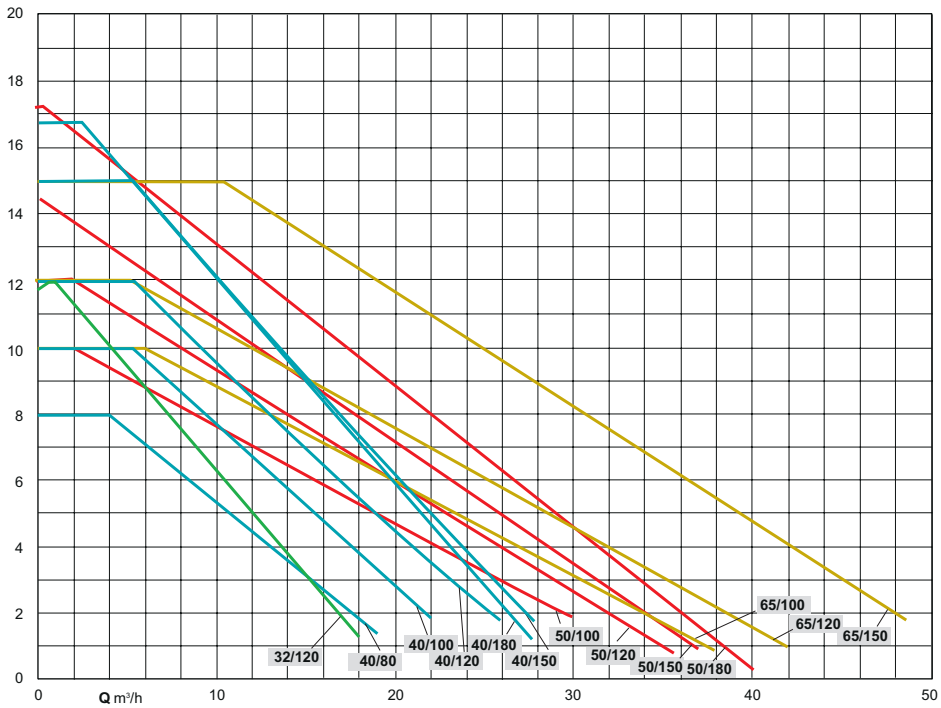


# Energy saving circulating pumps with flanges

# NCE HQ2

## Construction

Energy saving variable speed circulating pump driven by a permanent magnet synchronous motor (pm) controlled by on board inverter.
• Dry running detection
• Automatic venting function

### Digital input and output

• Start / stop input
• Relay output
• 0-10V input
• 4-20 mA input
• Modbus (RS485 and TCP / IP)

## Applications

The energy-efficient circulation pump is designed for water circulation in heating systems.
Underfloor heating systems
Single-pipe systems
Two-pipe systems
Pumping liquid:
Clean, non-aggressive and non-expolosive liquids, not containing solid particles, fibers or mineral/vegetable oil
In heating systems, water must meet the requirements of accepted standards of water quality in heating systems.

## Operating conditions

- Liquid temperature from -10 °C to +110 °C
- Ambient temperature from 0 °C to +40 °C
- Maximum permissible working pressure: 10 bar
- Storage: -10°C/+50°C max. relative humidity 95% at 40 °C
- Certifications: in conformity with CE requirements
- Sound pressure ≤ 65 dB (A).
- Max. quantity of ethylene glycol: 40%
- EMC according to: EN 55014-1, EN 55014-2, EN 61000-3-2, EN 61000-3-3.
- Flanged connection DN 32,40,50,65 PN 6/10
- The energy efficiency index of circulators is IEE ≤ 0.23.
- The benchmark for most efficient circulators is EEI ≤ 0,20.

## Motor

- Synchronous motor with permanent magnet.
Motor: variable speed
- Standard voltage: single-phase 230 V (-10%;+6%)
- Frequency: 50-60 Hz
- Protection: IP 44
- Insulation class: F
- Overload protection (integrated).
- Cable: phases and neutral.
- Constructed in accordance with: EN 60335-1, EN 60335-2-51.

## Designation

**NCE HQ2 40F - 100 / 220**
**NCE** = Series
**HQ2** = Version
**40** = DN ports in mm
**F** = Flanged connection
**100** = Max. head in dm
**220** = connection size mm

## Materials

| Component | Material |
|---|---|
| Pump casing | Cast iron with cataphoresis coating |
| Impeller | Composite PES |
| Shaft | Ceramic |
| Ball bearings | Ceramic |
| Thrust bearing | Graphite carbon |
| Rotor | Stainless steel jacket |
| Electronic card | .. |

## Operating modes

Automatic mode
(factory setting):
In this mode the pump automatically sets the operating pressure, depending on the hydraulic system. This mode is recommended in most systems.

Proportional pressure mode:
The circulator changes the pressure propotionally to the current flow.
The pressure value can be adjusted on three curves.

Constant pressure mode:
The circulator mantains the pressure constant when the reference flow changes.
The pressure value can be adjusted on three curves.

Fixed speed mode:
The circulator works with constant curve and the curve could be changed over three curves.

Night mode:.
The pump is changed to an automatic deceleration curve at night, so that it runs at low performance and low energy consumption.

Temperature mode
This control mode is suitable for systems with fixed system characteristic curves, and the pump can be controlled based on feedback from the system temperature sensor to operate under the working conditions required by the user.

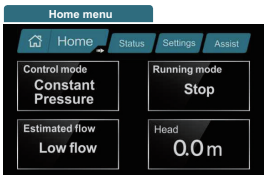


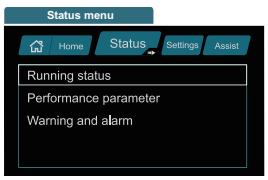


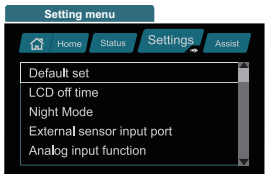


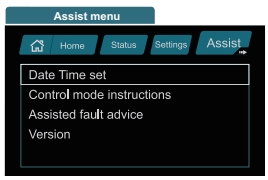

# NCE HQ2

## Features

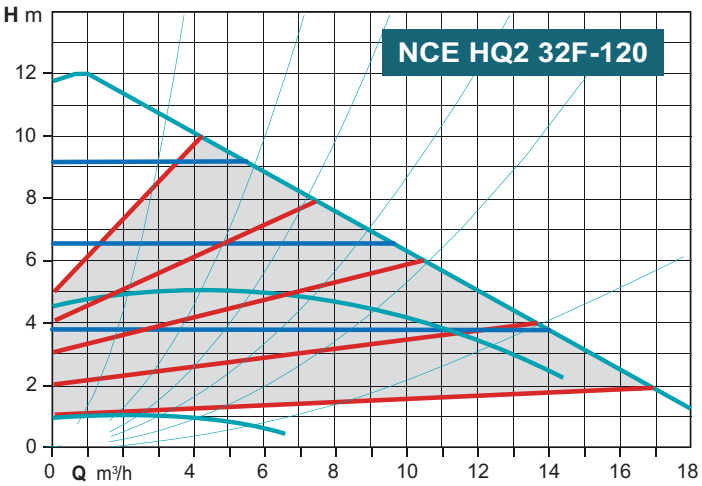


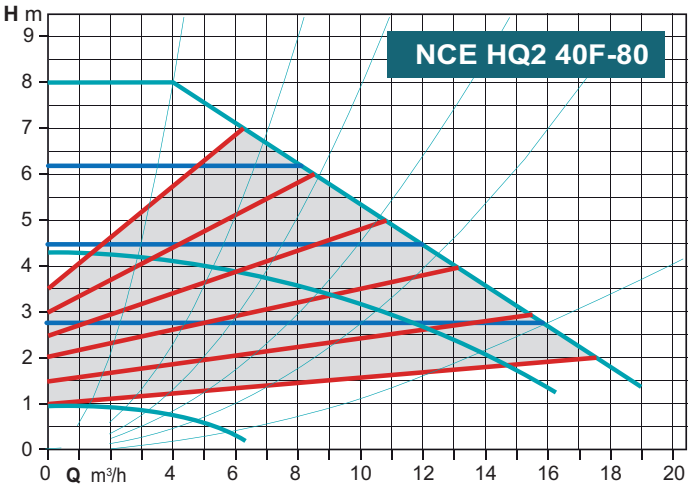


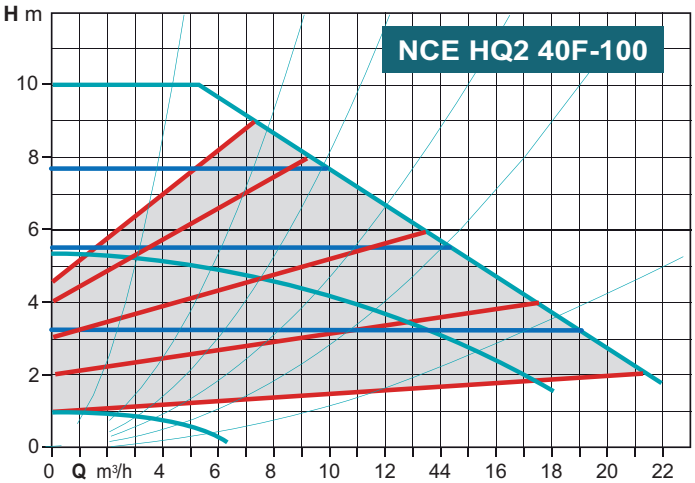


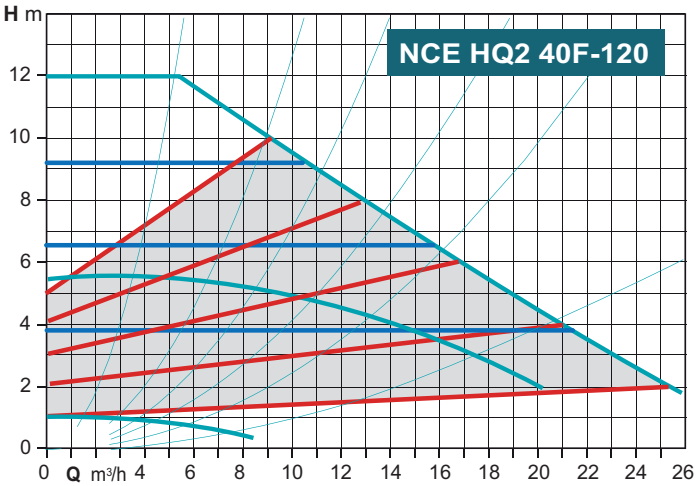


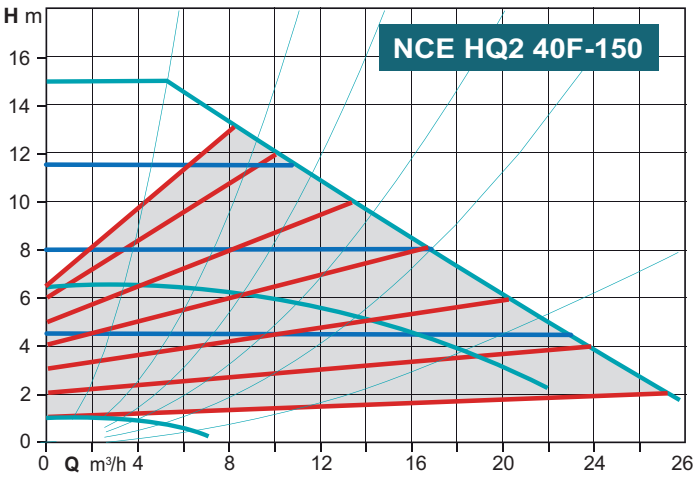


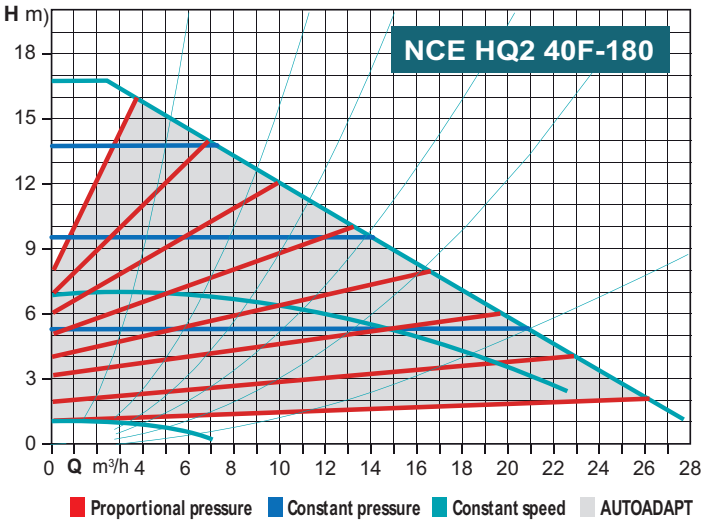

# NCE HQ2

## Features

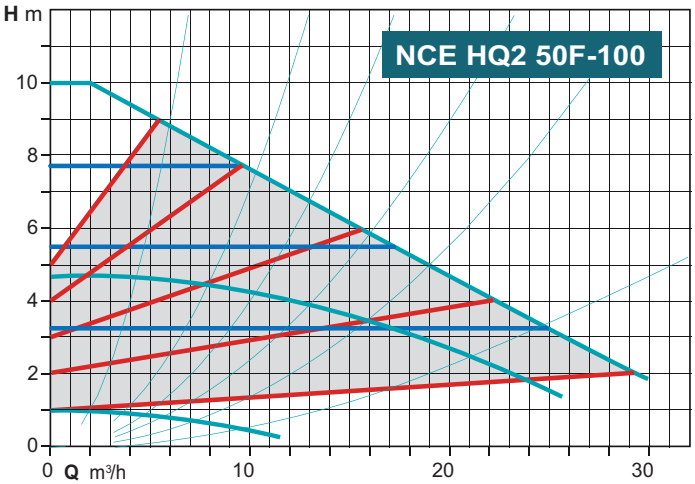


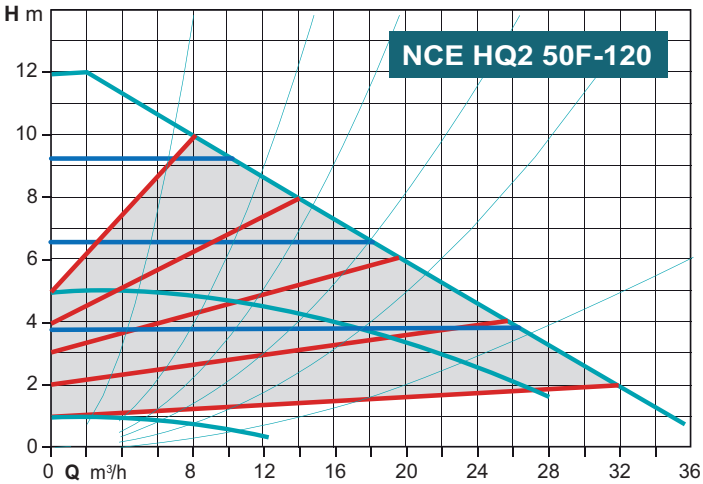


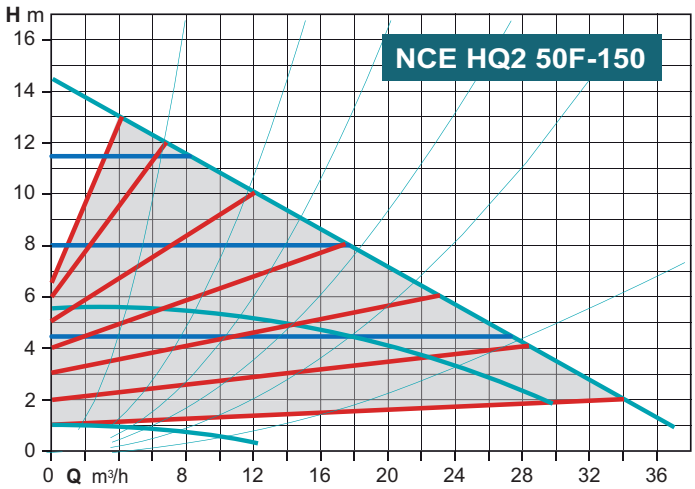


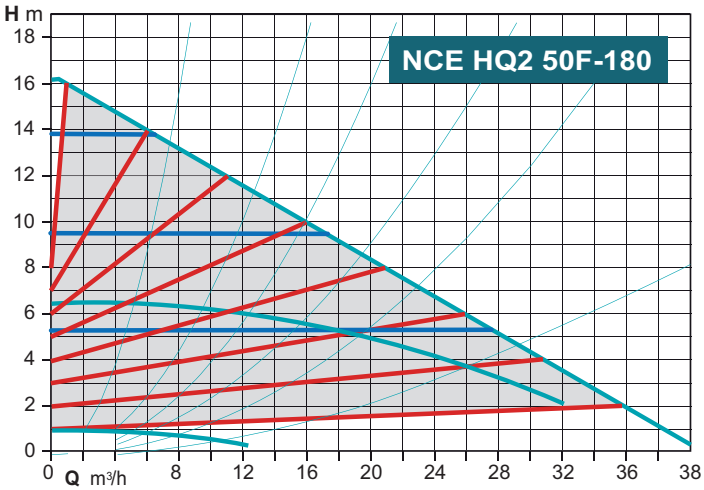


Proportional pressure | Constant pressure | Constant speed | AUTOADAPT

# NCE HQ2

## Features

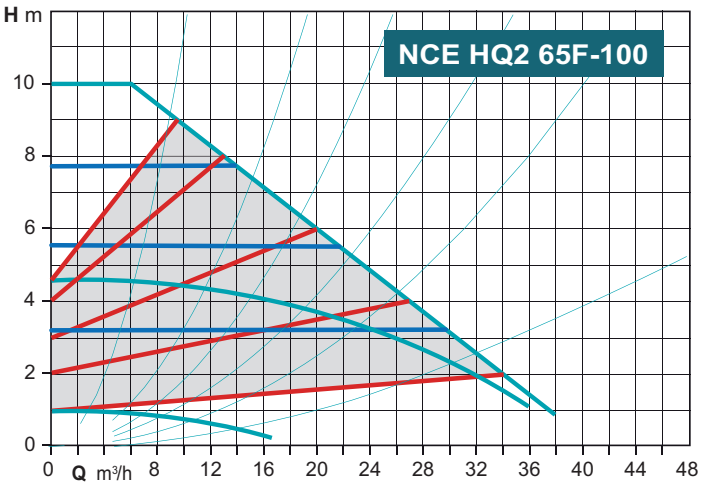


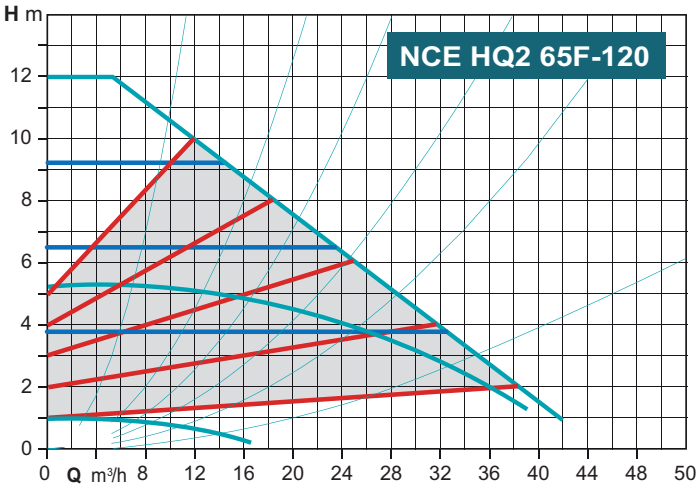


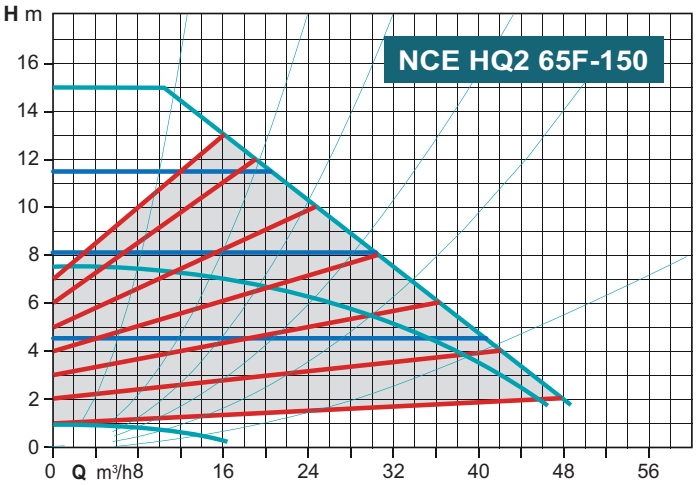


Proportional pressure Constant pressure Constant speed AUTOADAPT

# NCE HQ2

## Dimensions and weights

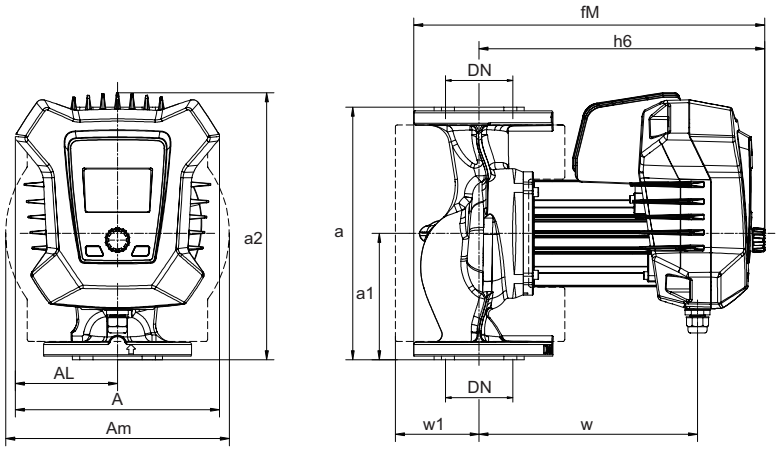


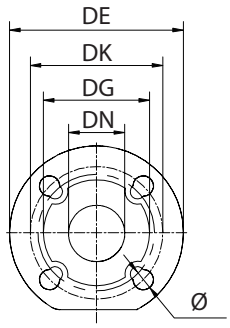


| mm | | | | | | | |
|---|---|---|---|---|---|---|---|
| DN | DE | DK | | DG | Holes | | |
| | | PN6 | PN10 | | N° | PN6 ø | PN10 ø |
| 32 | 140 | 90 | 100 | 76 | 4 | 14 | 19 |
| 40 | 150 | 100 | 110 | 84 | 4 | 14 | 19 |
| 50 | 164 | 110 | 125 | 102 | 4 | 14 | 19 |
| 65 | 185 | 130 | 145 | 119 | 4 | 14 | 19 |

| TYPE | DN | H max | Q max | 1~ 230 V | 1~ 230 V | P1 | P1 | mm | | | | | | | | | kg |
|---|---|---|---|---|---|---|---|---|---|---|---|---|---|---|---|---|---|
| | | m | m3/h | A min | A max | W min | W max | a | a1 | a2 | fM | A | AL | Am | h6 | w | kg |
| NCE HQ2 32F-120/220 | 32 | 12 | 17 | 0.17 | 1.48 | 15 | 329 | 220 | 110 | 266 | 379 | 226 | 113 | 212 | 312 | 242 | 16.4 |
| NCE HQ2 40F-80/220 | 40 | 8 | 19 | 0.19 | 1.18 | 17 | 267 | 220 | 110 | 266 | 382 | 226 | 113 | 212 | 312 | 242 | 16.7 |
| NCE HQ2 40F-100/220 | 40 | 10 | 22 | 0.19 | 1.65 | 17 | 370 | 220 | 110 | 266 | 382 | 226 | 113 | 212 | 312 | 242 | 16.7 |
| NCE HQ2 40F-120/250 | 40 | 12 | 24 | 0.18 | 2.05 | 15 | 463 | 250 | 125 | 281 | 382 | 226 | 113 | 212 | 312 | 242 | 17.2 |
| NCE HQ2 40F-150/250 | 40 | 15 | 26.2 | 0.18 | 2.71 | 16 | 615 | 250 | 125 | 281 | 382 | 226 | 113 | 212 | 312 | 242 | 17.2 |
| NCE HQ2 40F-180/250 | 50 | 18 | 26.2 | 0.22 | 2.71 | 16 | 615 | 250 | 125 | 281 | 382 | 226 | 113 | 212 | 312 | 242 | 17.2 |
| NCE HQ2 50F-100/280 | 50 | 10 | 30 | 0.22 | 1.9 | 21 | 425 | 280 | 140 | 296 | 389 | 226 | 113 | 248 | 312 | 242 | 18.8 |
| NCE HQ2 50F-120/280 | 50 | 12 | 33 | 0.22 | 2.37 | 20 | 533 | 280 | 140 | 296 | 389 | 226 | 113 | 248 | 312 | 242 | 19 |
| NCE HQ2 50F-150/280 | 50 | 15 | 35 | 0.24 | 2.87 | 22 | 649 | 280 | 140 | 296 | 389 | 226 | 113 | 248 | 312 | 242 | 19.7 |
| NCE HQ2 50F-180/280 | 50 | 18 | 37.5 | 0.24 | 3.4 | 22 | 769 | 280 | 140 | 296 | 389 | 226 | 113 | 248 | 312 | 242 | 19.7 |
| NCE HQ2 65F-100/340 | 65 | 10 | 37 | 0.26 | 2.73 | 25 | 619 | 340 | 170 | 326 | 399 | 226 | 113 | 266 | 320 | 250 | 21.3 |
| NCE HQ2 65F-120/340 | 65 | 12 | 40 | 0.26 | 3.42 | 24 | 774 | 340 | 170 | 326 | 399 | 226 | 113 | 266 | 320 | 250 | 21.3 |
| NCE HQ2 65F-150/340 | 65 | 15 | 49 | 0.31 | 5.53 | 31 | 1263 | 340 | 170 | 326 | 399 | 226 | 113 | 266 | 320 | 250 | 21.3 |

## Examples of installations

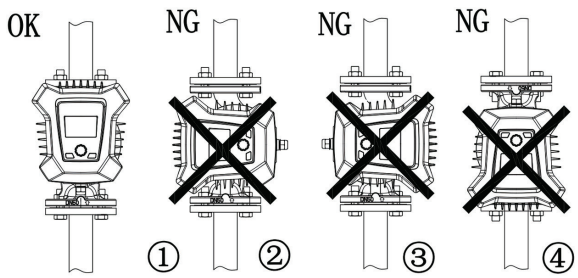


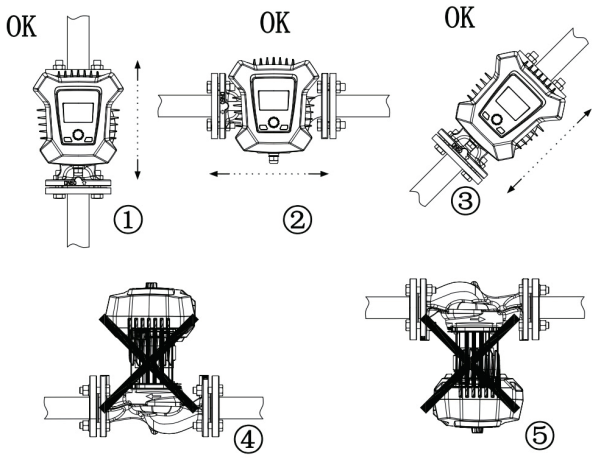

# NCE EL

**Coverage chart n ≈ 2900 rpm**

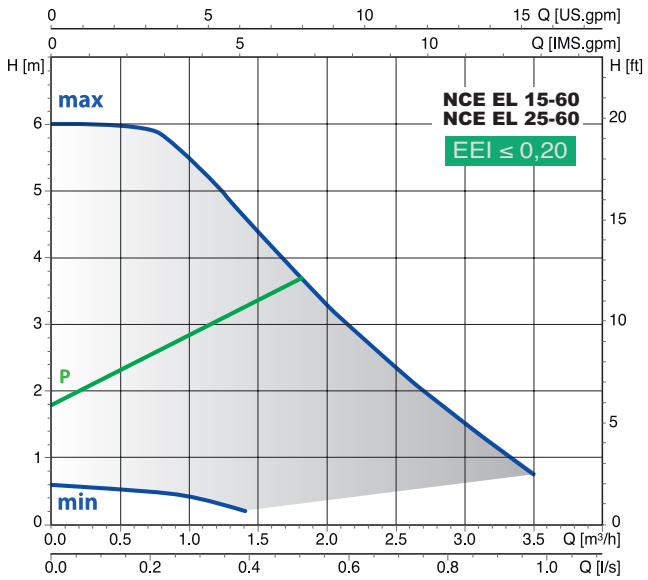


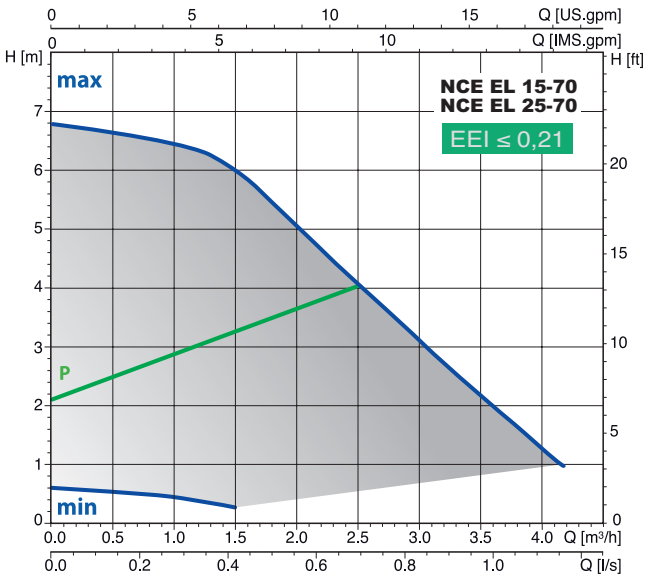


# Energy saving circulating pumps for solar systems with frequency converter

# NCE EL

## Construction

Energy saving variable speed circulating pump driven by a permanent magnet synchronous motor (pm) controlled by on board inverter.

## Applications

Solar thermal systems.

## Operating conditions

- Liquid temperature from +2 °C to +110 °C
- Ambient temperature from 0 °C to +40 °C
- Maximum permissible working pressure: 10 bar
- Storage: -20°C/+70°C max. relative humidity 95% at 40 °C
- Certifications: in conformity with CE requirements
- Sound pressure ≤ 43 dB (A).
- Minimum suction pressure: 0.3 bar at 50°C, 1.0 bar at 95°C, 1.5 bar at 110°C
- Maximum glycol quantity: 40%
- EMC according to: EN 55014-1, EN 61000-3-2, EN 55014-2
- Connections: threaded ports ISO 228: G 1, G 1 1/2, G 2
- The benchmark for most efficient circulators is EEI ≤ 0,20.
- Minimun power: 3 W.

## Motor

- Synchronous motor with permanent magnet.

Motor: variable speed
- Standard voltage: single-phase 230 V (-10%;+6%)
- Frequency: 50/60 Hz
- Protection: IP 44
- Insulation class: H
- Class II appliance
- Overload protection (integrated).
  1) automatic protection with electronic rotor release
  2) Overload thermal protector
- Cable: phases and neutral.
- Constructed in accordance with EN 60335-1, EN 60335-2-51.

## Special features on request

Brass or cast iron unions.
EPP thermal insulation shell.

## Designation

**NCE EL 25 - 60 / 180**
**NCE** = Series
**EL** = Version
**32** = DN ports in mm
**60** = Max. head in dm
**180** = connection size mm

## Materials

| Component | Material |
|---|---|
| Pump casing | Cast iron GJL 200 EN 1561 |
| Impeller | Composite |
| Shaft | Ceramic |
| Ball bearings | Carbon |
| Thrust bearing | Ceramic |
| Rotor | Composite / Ferrite |
| Winding | Copper wire |
| Electronic card | - |
| Gasket | EPDM |

## Operating modes

PROPORTIONAL CURVE PROGRAMMING Δp-v
(GREEN LED)
Moving the switch to 1 or 2 setting, the pump operates with the proportional curve.
This mode ensures maximum energy efficiency.

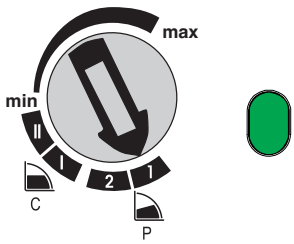


MANUAL PROGRAMMING
(BLUE LED)
Setting the switch in any position between the MIN and MAX points, the most suitable operating curve for the installation is manually selected.

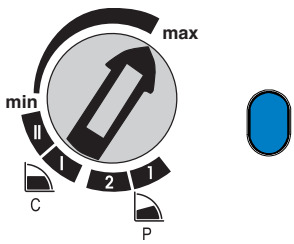


WARNING!
- The red LED indicates that the pump is not rotating but is still under tension.
- White flashing LED : plant degassing requirement, air in the system.

# NCE EL

## Dimensions and weights

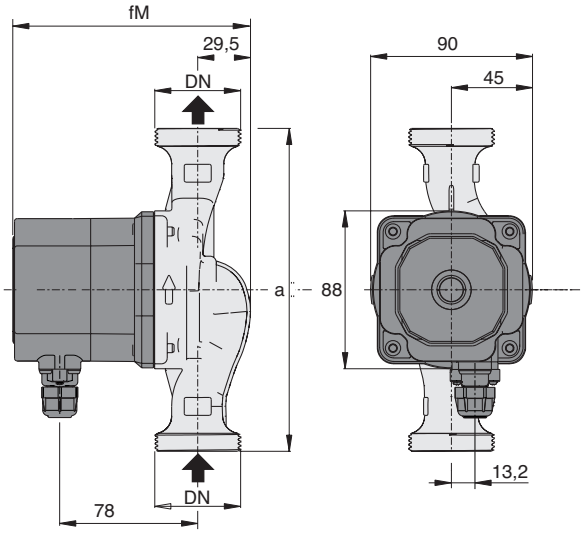


## Unions (on request)

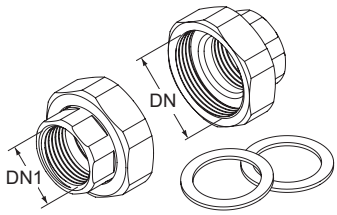


| TYPE | DN | DN1 |
|---|---|---|
| KIT G 1 - G 1/2 (NCE . 15..) | G 1 | G 1/4 |
| KIT G 1 1/2 - G 1 (NCE . 25..) | G 1 1/2 | G 1 |
| KIT G 2 - G 1 1/4 (NCE . 32..) | G 2 | G 1 1/4 |

| TYPE | DN | 230 V | | P1 | | mm | | kg |
|---|---|---|---|---|---|---|---|---|
| | | A max | A min | W max | W min | fm | a | |
| NCE EL 15-60/130/A | G 1 | 0,33 | 0,33 | 42 | 3 | 134 | 130 | 1,67 |
| NCE EL 25-60/130/A | G 1 1/2 | 0,33 | 0,33 | 42 | 3 | 134 | 130 | 1,81 |
| NCE EL 25-60/180/A | G 1 1/2 | 0,33 | 0,33 | 42 | 3 | 134 | 180 | 1,96 |
| NCE EL 15-70/130 | G 1 | 0,44 | 0,33 | 56 | 3 | 144 | 130 | 1,91 |
| NCE EL 25-70/130 | G 1 1/2 | 0,44 | 0,33 | 56 | 3 | 144 | 130 | 2,05 |
| NCE EL 25-70/180 | G 1 1/2 | 0,44 | 0,33 | 56 | 3 | 144 | 180 | 2,20 |

## Examples of installations

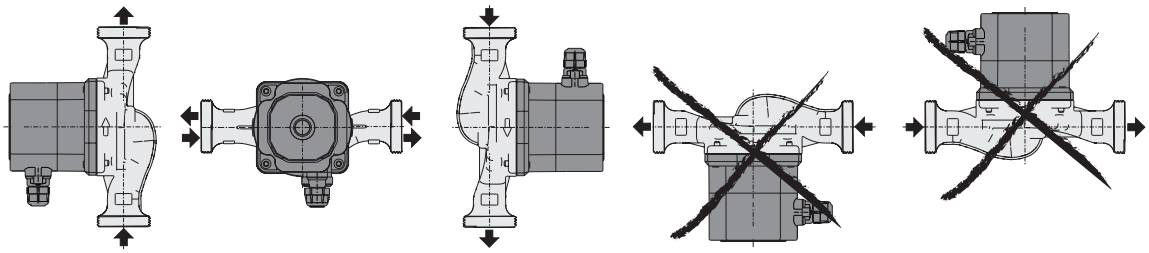

## Terminal box arrangement (on request)

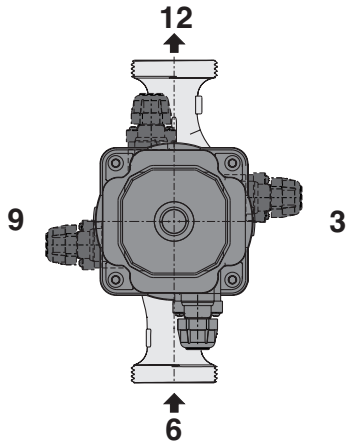

# NCE ES

**Coverage chart n ≈ 2900 rpm**

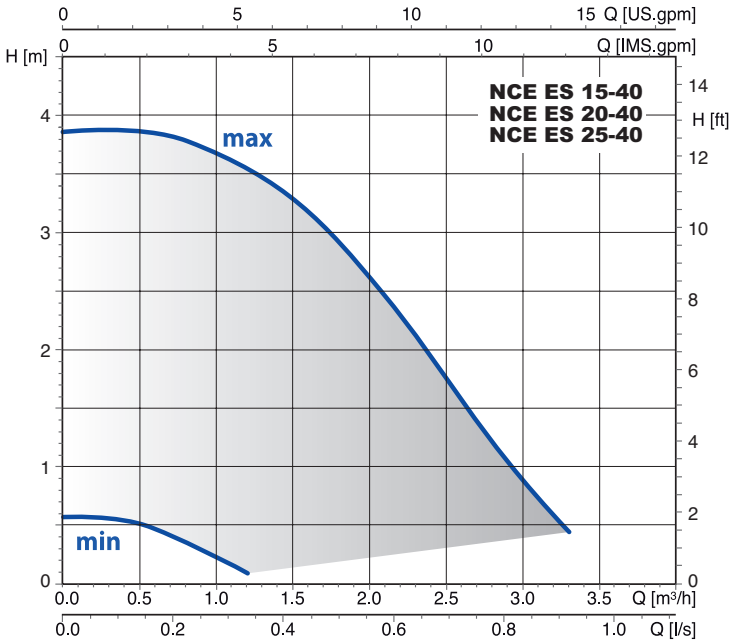


# High efficiency energy circulating pumps for sanitary hot water

# NCE ES

## Construction

Energy saving variable speed circulating pump driven by a permanent magnet synchronous motor (pm) controlled by on board inverter. Bronze pump casing.

## Applications

Domestic hot water circulation systems.

## Operating conditions

- Liquid temperature from +2 °C to +95 °C
- Ambient temperature from +2 °C to +40 °C
- Maximum permissible working pressure: 10 bar
- Storage: -20°C/+70°C max. relative humidity 95% at 40 °C
- Certifications: in conformity with CE requirements
- Sound pressure ≤ 43 dB (A).
- Minimum suction pressure: 0.3 bar at 50°C, 1.0 bar at 95°C
- EMC secondo: EN 55014-1, EN 55014-2, EN 61000-3-2, EN 61000-3-3.
- Threated ports ISO 228: G 1, G 1 1/4, G 1 1/2.

## Motor

- Synchronous motor with permanent magnet.

Motor: variable speed
- Standard voltage: single-phase 230 V (-10%;+6%)
- Frequency: 50/60 Hz
- Protection: IP 44
- Insulation class: H
- Class II appliance
- Overload protection (integrated).
  1) automatic protection with electronic rotor release
  2) Overload thermal protector
- Cable: phases and neutral.
- Constructed in accordance with EN 60335-1, EN 60335-2-51.

## Special features on request

Brass unions.

## Designation

**NCE ES 25 - 40 / 130**
**NCE** = Series
**ES** = Version for sanitary hot water
**32** = DN ports in mm
**60** = Max. head in dm
**180** = connection size mm

## Materials

| Component | Material |
|---|---|
| Pump casing | Bronze |
| Impeller | Composite |
| Shaft | Ceramic |
| Ball bearings | Carbon |
| Thrust bearing | Ceramic |
| Rotor | Composite / Ferrite |
| Winding | Copper wire |
| Electronic card | - |
| Gasket | EPDM |

## Operating modes

MANUAL PROGRAMMING
(BLUE LED)
Setting the switch in any position between the MIN and MAX points, the most suitable operating curve for the installation is manually selected.

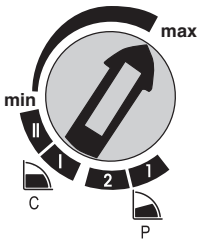

WARNING!
- The red LED indicates that the pump is not rotating but is still under tension.
- White flashing LED : plant degassing requirement, air in the system.

# NCE ES

## Dimensions and weights

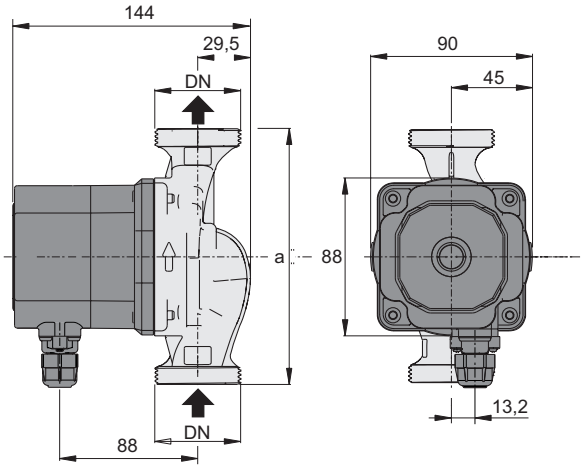


Disegno_NCE_ES_10

## Unions (on request)

| TYPE | DN | DN1 |
|---|---|---|
| KIT G 1 - G 1/2 (NCE . 15..) | G 1 | G 1/4 |
| KIT G 1 1/2 - G 1 (NCE . 25..) | G 1 1/2 | G 1 |
| KIT G 2 - G 1 1/4 (NCE . 32..) | G 2 | G 1 1/4 |

| TYPE | DN | 230 V | | P1 | | mm | kg |
|---|---|---|---|---|---|---|---|
| | | A max | A min | W max | W min | a | |
| NCE ES 15-40/130 | G 1 | 0,35 | 0,03 | 44 | 4,5 | 130 | 2,15 |
| NCE ES 20-40/130 | G 1 1/4 | 0,35 | 0,03 | 44 | 4,5 | 130 | 2,25 |
| NCE ES 25-40/130 | G 1 1/2 | 0,35 | 0,03 | 44 | 4,5 | 130 | 2,35 |

## Examples of installations

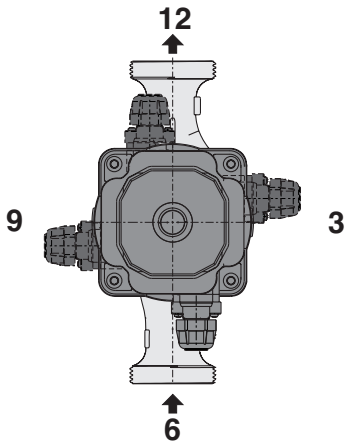


## Terminal box arrangement (on request)

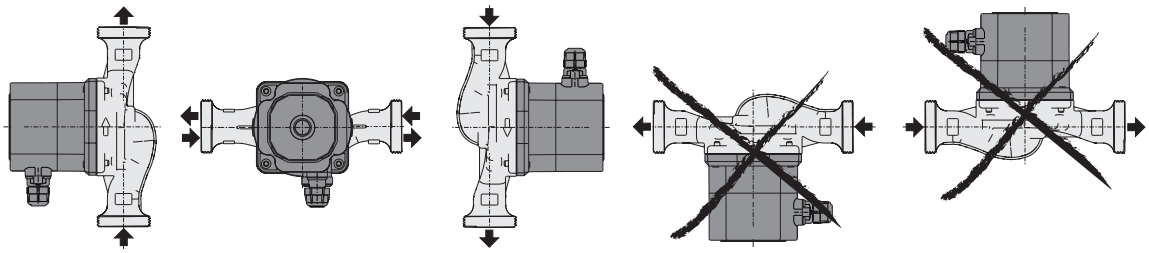

# NCE PS2

## Coverage chart

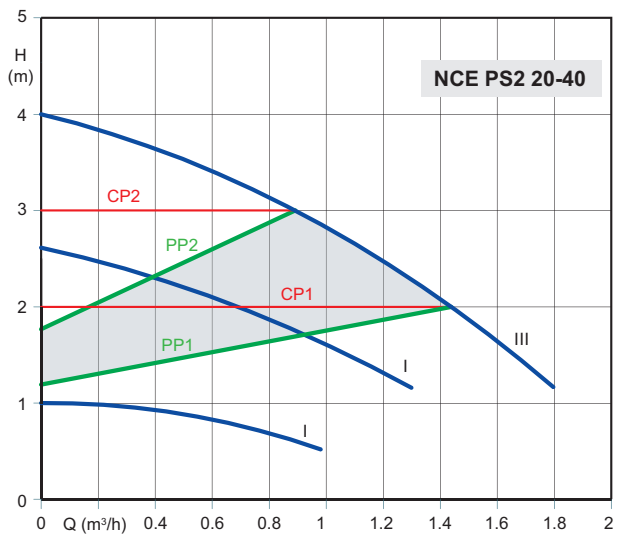


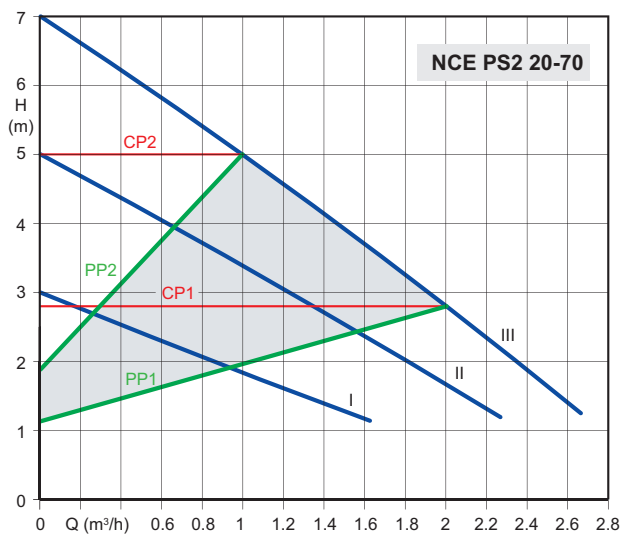


# High efficiency energy circulating pumps for sanitary hot water

# NCE PS2

## Construction

Energy saving variable speed circulating pump driven by a permanent magnet synchronous motor (pm) controlled by on board inverter. Bronze pump casing. Standard with brass unions.

## Applications

Domestic hot water circulation systems.

## Operating conditions

- Liquid temperature from +5 °C to +65 °C
- Ambient temperature from 0 °C to +40 °C
- Maximum permissible working pressure: 3 bar
- Storage: -10°C/+50°C max. relative humidity 95% at 40 °C
- Certifications: in conformity with CE requirements
- Sound pressure ≤ 45 dB (A).
- Minimum suction pressure: - 0,05 bar at 75 °C 0,28 bar a 90 °C.
- EMC secondo: EN 55014-1, EN 55014-2, EN 61000-3-2, EN 61000-3-3.
- Connections: threaded ports ISO 228: G 1.

## Motor

- Synchronous motor with permanent magnet.

Motor: variable speed
- Standard voltage: single-phase 230 V (-10%;+6%)
- Frequency: 50-60 Hz
- Protection: IP 44
- Insulation class: F
- Class II appliance
- Overload protection (integrated).
- Cable: phases and neutral.
- Constructed in accordance with EN 60335-1, EN 60335-2-51.

## Designation

**NCE PS2 20 - 40 / 130**
**NCE** = Series
**PS2** = Version for sanitary hot water
**20** = DN ports in mm
**40** = Max. head in dm
**130** = connection size mm

## Materials

| Component | Material |
|---|---|
| Pump casing | Bronze |
| Impeller | Composite PES |
| Shaft | Ceramic |
| Ball bearings | Ceramic |
| Thrust bearing | Ceramic |
| Rotor | jacket |
| Winding | Copper wire |
| Gasket | EPDM |

## Operating modes

Proportional pressure mode:
PP1 Lowest proportional pressure curve
PP2 Highest proportional pressure curve
The duty point of the pump will move up or down on the higher proportional pressure curve, depending on the heating demand.
The head (pressure) is reduced as the heating demand decreases and increases as the heating demand increases

Constant pressure mode:
(CP1 Lowest constant pressure curve)
(CP2 Highest constant pressure curve)
The duty point of the pump will move outwards or along a constant pressure curve, depending on the heating demand.
The head (pressure) is kept constant, regardless of the heating demand.

Fixed speed mode:
(III) Pump runs at a constant speed and consequently on a constant curve. In speed III, the pump is set to run on the Max. curve under all operating conditions. Quick venting of the pump can be obtained by setting the pump to speed III for a short period.
(II) Pump runs at a constant speed and consequently on a constant curve.In speed II, the pump is set to run on the Medium curve under all operating conditions.
(I) Pump runs at a constant speed and consequently on a constant curve. In speed I, the pump is set to run on the Min. curve under all operating conditions.

Automatic mode
In “AUTO” mode, pump power automatically increases or decreases based on system flow under certain conditions.

Night mode:.
The pump works by selecting the night mode, after one hour the power turns off automatically, after two hours it will drop to a minimum between 5 and 10 watts, after seven hours the automatic mode of the pump is eliminated and restored to the original conditions.

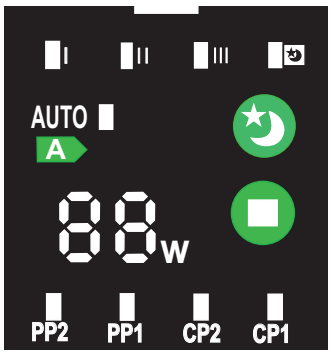


Operating functions - control buttons.
NCE PS circulator could work:
with curves at proportional pressure
with curves at constant pressure
with curves at fixed speed
- automatic mode
- night mode

# NCE PS2

## Dimensions and weights

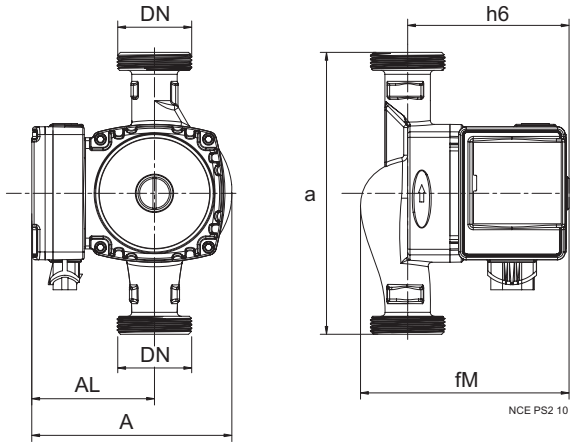


| TYPE | DN | H | Q | P1 | a | fM | h6 | A | AL | kg |
|---|---|---|---|---|---|---|---|---|---|---|
| | | m | m3/h | W max | mm | mm | mm | mm | mm | kg |
| NCE PS2 20-40/130 | G 1 | 4 | 1.8 | 22 | 130 | 129 | 101 | 128 | 78 | 2.1 |
| NCE PS2 20-70/130 | G 1 | 7 | 2.7 | 47 | 130 | 129 | 101 | 128 | 78 | 2.1 |

## Examples of installations

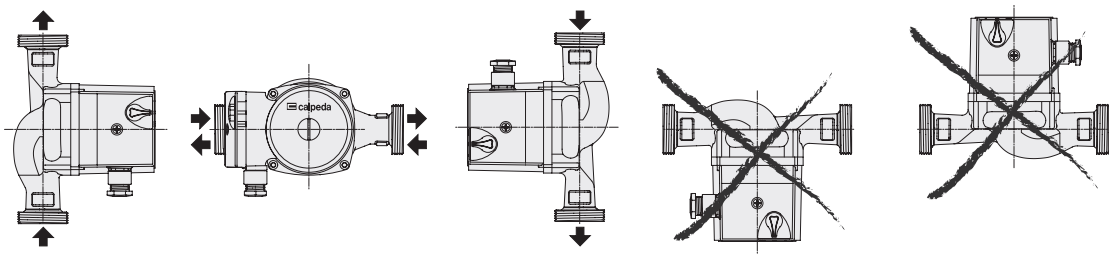

# NCS3

## Coverage chart

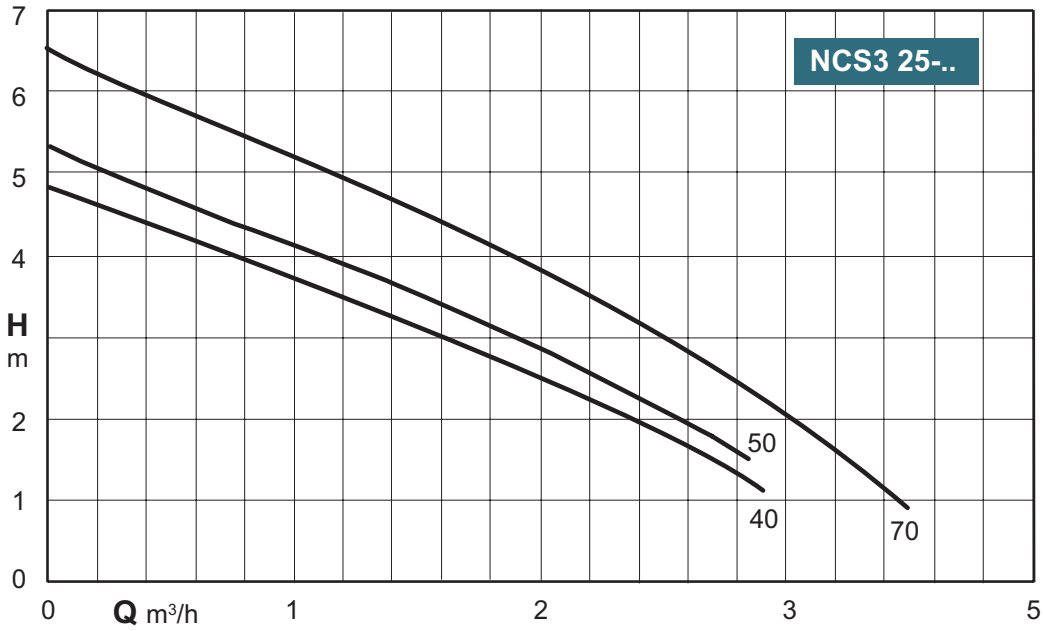


# Circulating pumps for sanitary hot water

# NCS3

## Construction

3-speed circulator.
Pump casing with suction and delivery connections with the same diameter and on the same axis (in-line).
Bronze pump casing.
Standard with brass unions.

## Applications

Impianti di circolazione di acqua calda sanitaria.

## Operating conditions

Liquid temperature from +5 °C to +65 °C.
Ambient temperature up to 40 °C.
Sound pressure ≤ 45 dB (A)
Minimum suction pressure: 0,05 bar at 50 °C
- Maximum permissible working pressure: 10 bar
Storage: -10°C/+50°C max. relative humidity 95% at 40 °C
Connections: threaded ports ISO 228: G 1 1/2.

## Motor

2-pole induction motor, 50 Hz.
Three adjustable speeds.
NCS3: single-phase 230 V.
Insulation class H.
- Protection: IP 44
Overload protection (integrated).
- Cable: phases and neutral.
Constructed in accordance with EN 60335-1, EN 60335-2-51.

## Designation

**NCS3 25 - 40 / 130**
**NCS3** = Series
**25** = DN ports in mm
**40** = Max. head in dm
**130** = connection size mm

## Materials

| Component | Material |
|---|---|
| Pump casing | Bronze |
| Impeller | Composite PES |
| Shaft | Ceramic |
| Ball bearings | Ceramic |
| Thrust bearing | Ceramic |
| Rotor | jacket |
| Winding | Copper wire |
| Gasket | EPDM |

## Operating modes

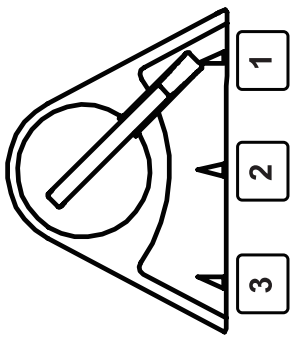

MANUAL PROGRAMMING
By positioning the selector at any point between 1,2 and 3, the most suitable operating curve for the system is manually chosen.

# NCS3

## Characteristic curves n ≈ 2900 rpm

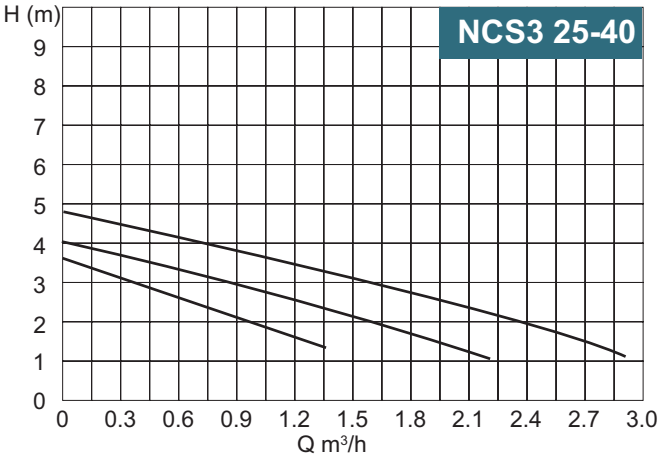


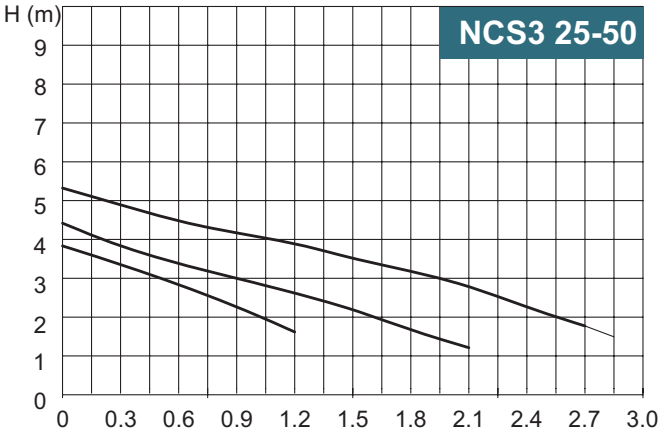


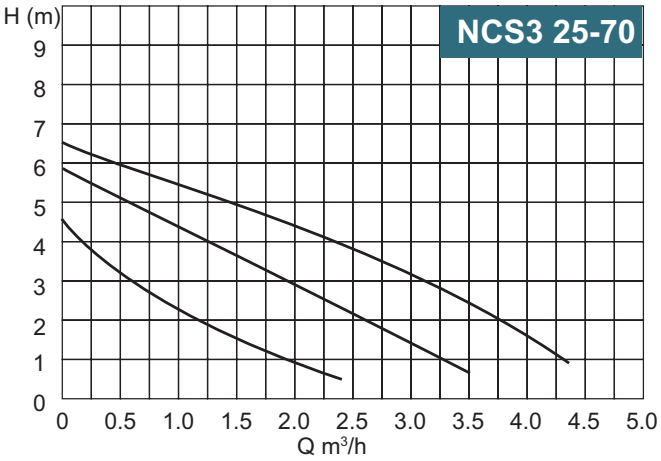

# NCS3

## Dimensions and weights

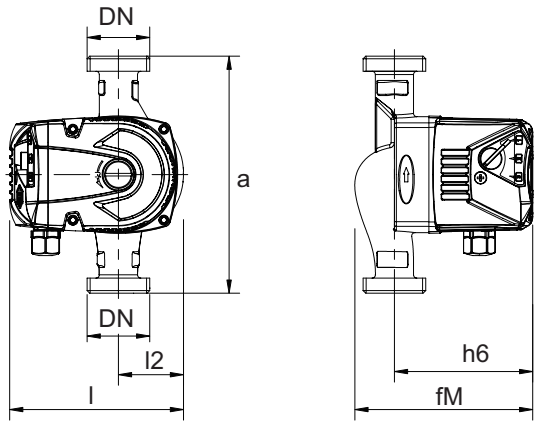


## Unions

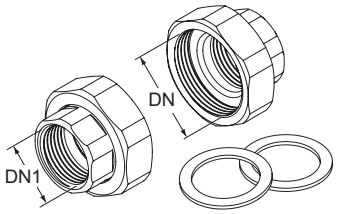


| TYPE | DN | DN1 |
|---|---|---|
| KIT G 1 1/4 - G 3/4 (NCS3 20..) | G 1 1/4 | G 3/4 |
| KIT G 1 1/2 - G 1 (NCS3 25..) | G 1 1/2 | G 1 |

| TYPE | DN | Pos. | P1 (W) | a | FM | l2 | l | h6 | kg |
|---|---|---|---|---|---|---|---|---|---|
| NCS3 25-40/130/A | G 1 1/2 | 3 | 72 | 130 | 135 | 49 | 132 | 105 | 2.5 |
| | | 2 | 53 | | | | | | |
| | | 1 | 38 | | | | | | |
| NCS3 25-50/130/A | G 1 1/2 | 3 | 81 | 130 | 135 | 49 | 132 | 105 | 2.6 |
| | | 2 | 67 | | | | | | |
| | | 1 | 46 | | | | | | |
| NCS3 25-70/130/A | G 1 1/2 | 3 | 122 | 130 | 135 | 49 | 132 | 105 | 2.7 |
| | | 2 | 95 | | | | | | |
| | | 1 | 66 | | | | | | |

## Examples of installations

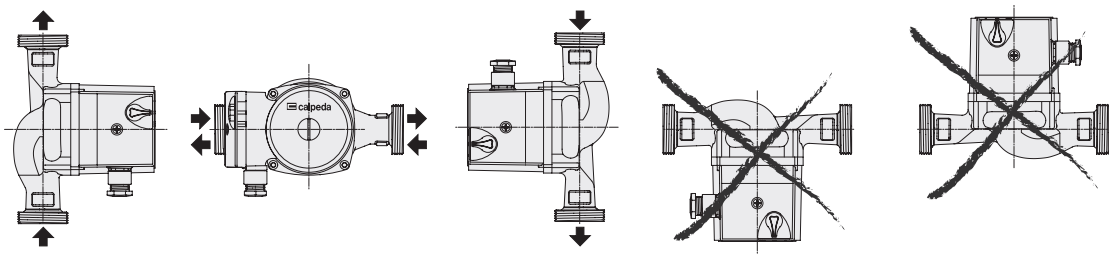

# NC3

**Coverage chart**

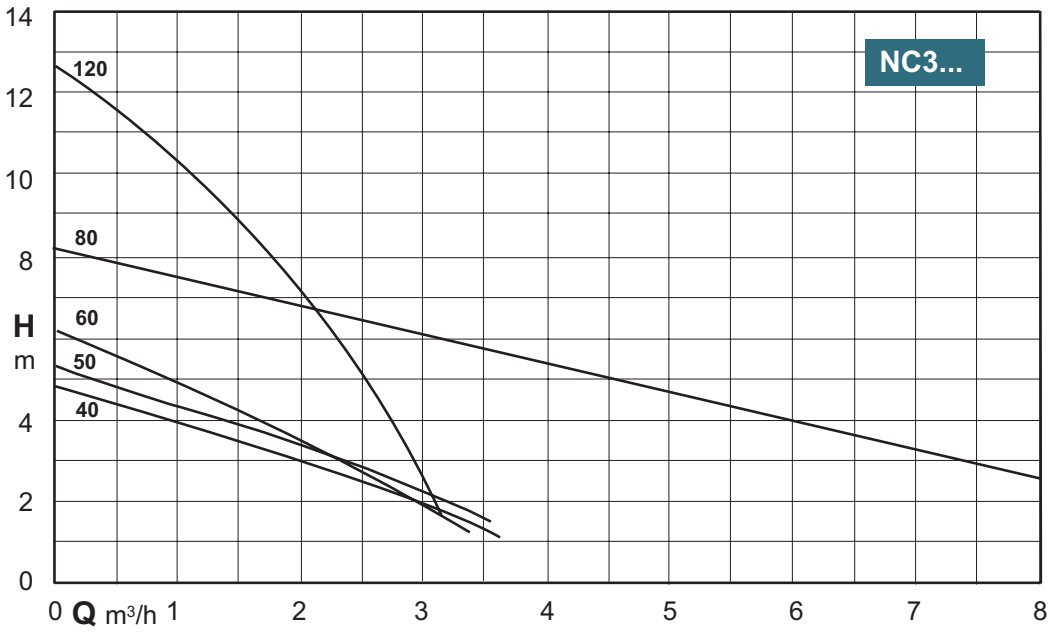


# Three speeds circulating pumps with threaded ports

# NC3

## Construction

3-speed circulator.
Pump casing with suction and delivery connections with the same diameter and on the same axis (in-line).
Standard with steel unions with cataphoresis treatment.

## Applications

For clean liquids, without abrasives, non-aggressive for the pump materials.
Domestic and civil heating systems.

## Operating conditions

Liquid temperature: from -10°C to +110°C.
Ambient temperature up to 40 °C.
Sound pressure ≤ 45 dB (A)
Minimum suction pressure: 0,05 bar at 50 °C
- Maximum permissible working pressure: 10 bar
- Storage: -10°C/+50°C max. relative humidity 95% at 40 °C
Connections: threaded ports ISO 228: G 1, G 1 1/2, G 2.

## Motor

2-pole induction motor, 50 Hz.
Three adjustable speeds.
NCS3: single-phase 230 V.
Insulation class H.
- Protection: IP 44
- Overload protection (integrated).
- Cable: phases and neutral.
- Constructed in accordance with EN 60335-1, EN 60335-2-51.

## Designation

**NC3 25 - 40 / 130**
**NC3** = Series
**25** = DN ports in mm
**40** = Max. head in dm
**130** = connection size mm

## Materials

| Component | Materials |
|---|---|
| Pump casing | Cast iron |
| Impeller | Composite PES |
| Shaft | Ceramic |
| Ball bearings | Ceramic |
| Gasket | EPDM |

## Operating modes

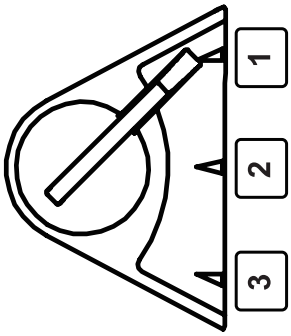

MANUAL PROGRAMMING
By positioning the selector at any point between 1,2 and 3, the most suitable operating curve for the system is manually chosen.

# NC3

calpeda®

## Characteristic curves n ≈ 2900 rpm

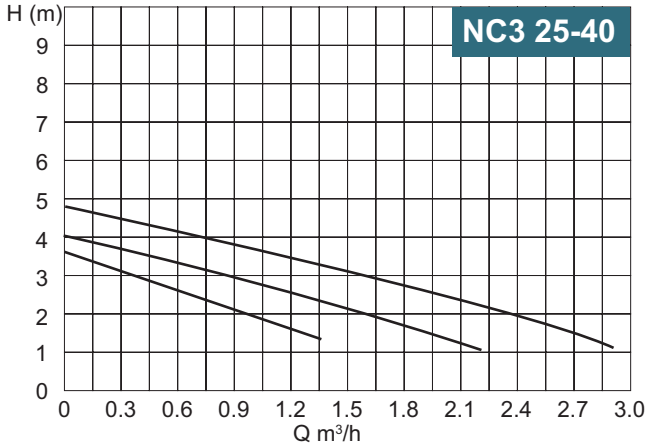


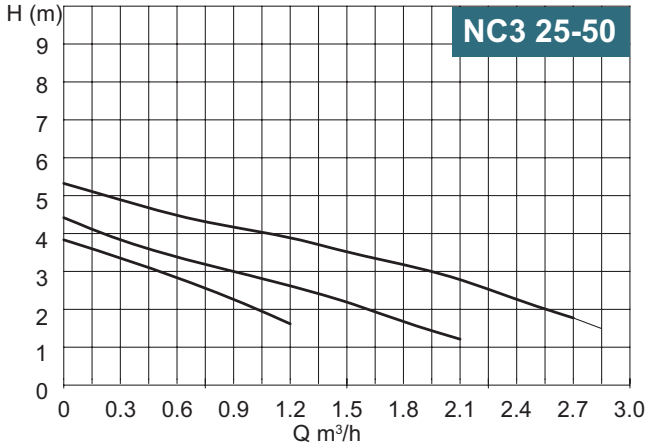


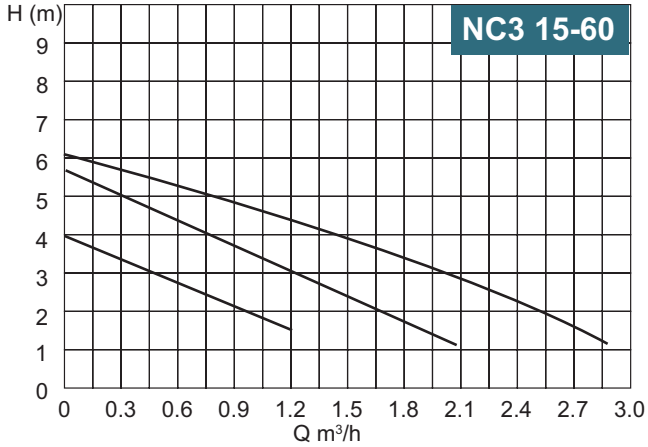


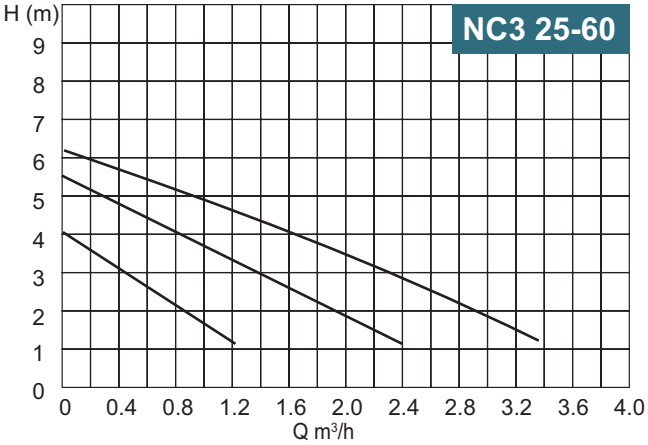


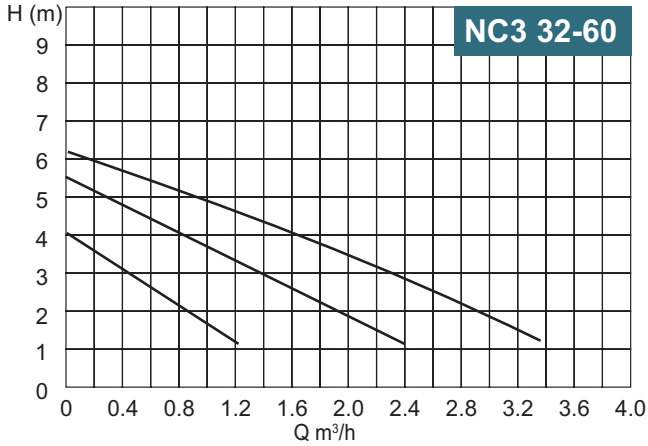


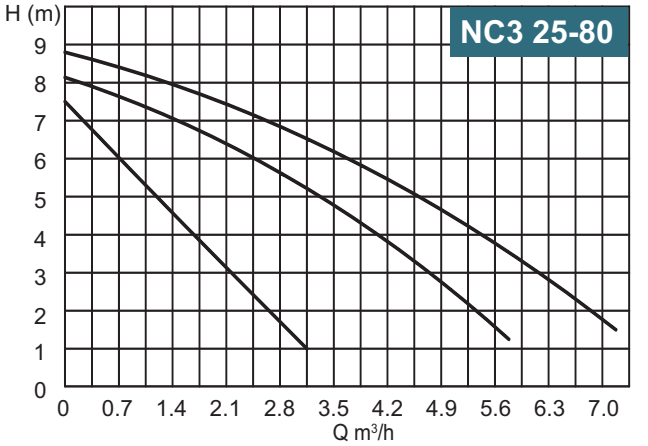


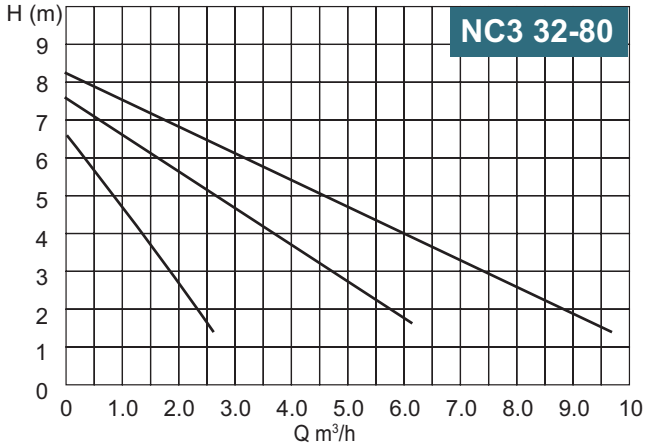


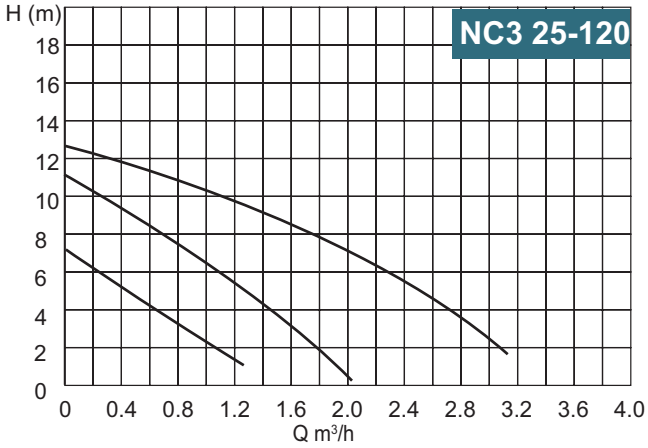

# NC3

## Dimensions and weight

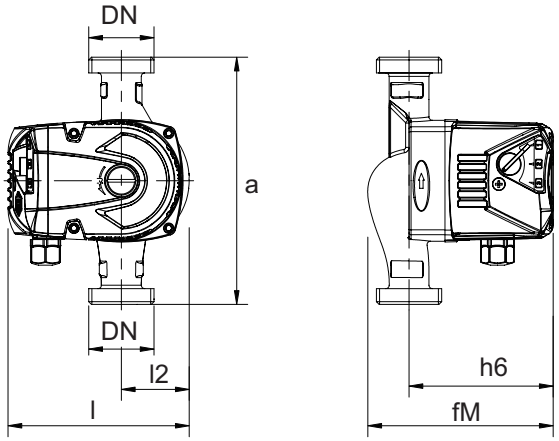


## Unions

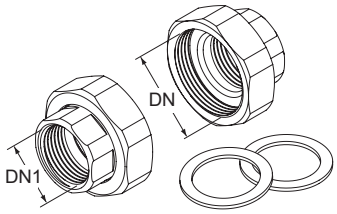


| TYPE | DN | DN1 |
|---|---|---|
| KIT G 1 - G 1/2 (NCE . 15..) | G 1 | G 1/4 |
| KIT G 1 1/2 - G 1 (NCE . 25..) | G 1 1/2 | G 1 |
| KIT G 2 - G 1 1/4 (NCE . 32..) | G 2 | G 1 1/4 |

| TYPE | DN | Pos. | P1 (W) | 1x 230 V [A] | a | FM | l2 | l | h6 | kg |
|---|---|---|---|---|---|---|---|---|---|---|
| NC3 25-40/130/A | G 1 1/2 | 3 | 72 | 0,30 | 130 | 135 | 49 | 132 | 105 | 2.5 |
| | | 2 | 53 | 0,26 | | | | | | |
| | | 1 | 38 | 0,18 | | | | | | |
| NC3 25-40/180/A | G 1 1/2 | 3 | 72 | 0,30 | 180 | 135 | 49 | 132 | 105 | 2.8 |
| | | 2 | 53 | 0,26 | | | | | | |
| | | 1 | 38 | 0,18 | | | | | | |
| NC3 25-50/130/A | G 1 1/2 | 3 | 81 | 0,38 | 130 | 135 | 49 | 132 | 105 | 2.6 |
| | | 2 | 67 | 0,28 | | | | | | |
| | | 1 | 46 | 0,18 | | | | | | |
| NC3 25-50/180/A | G 1 1/2 | 3 | 81 | 0,38 | 180 | 135 | 49 | 132 | 105 | 2.8 |
| | | 2 | 67 | 0,28 | | | | | | |
| | | 1 | 46 | 0,18 | | | | | | |
| NC3 15-60/130/A | G 1 | 3 | 93 | 0,66 | 130 | 135 | 49 | 132 | 105 | 2.5 |
| | | 2 | 67 | 0,59 | | | | | | |
| | | 1 | 46 | 0,41 | | | | | | |
| NC3 25-60/130/A | G 1 1/2 | 3 | 93 | 0,66 | 130 | 135 | 49 | 132 | 105 | 2.6 |
| | | 2 | 67 | 0,59 | | | | | | |
| | | 1 | 46 | 0,41 | | | | | | |
| NC3 25-60/180/A | G 1 1/2 | 3 | 93 | 0,66 | 180 | 135 | 49 | 132 | 105 | 2.8 |
| | | 2 | 67 | 0,59 | | | | | | |
| | | 1 | 46 | 0,41 | | | | | | |
| NC3 32-60/180/A | G 2 | 3 | 93 | 0,66 | 180 | 135 | 49 | 132 | 105 | 2.9 |
| | | 2 | 67 | 0,59 | | | | | | |
| | | 1 | 46 | 0,41 | | | | | | |
| NC3 25-80/180/A | G 1 1/2 | 3 | 182 | 0,66 | 180 | 135 | 60 | 153 | 148 | 4.5 |
| | | 2 | 170 | 0,59 | | | | | | |
| | | 1 | 145 | 0,41 | | | | | | |
| NC3 32-80/180/A | G 2 | 3 | 270 | 0,66 | 180 | 173 | 60 | 153 | 148 | 4.6 |
| | | 2 | 210 | 0,59 | | | | | | |
| | | 1 | 150 | 0,41 | | | | | | |
| NC3 25-120/180/A | G 1 1/2 | 3 | 245 | 0,66 | 180 | 161 | 73 | 166 | 136 | 4.7 |
| | | 2 | 220 | 0,59 | | | | | | |
| | | 1 | 145 | 0,41 | | | | | | |

## Examples of installations

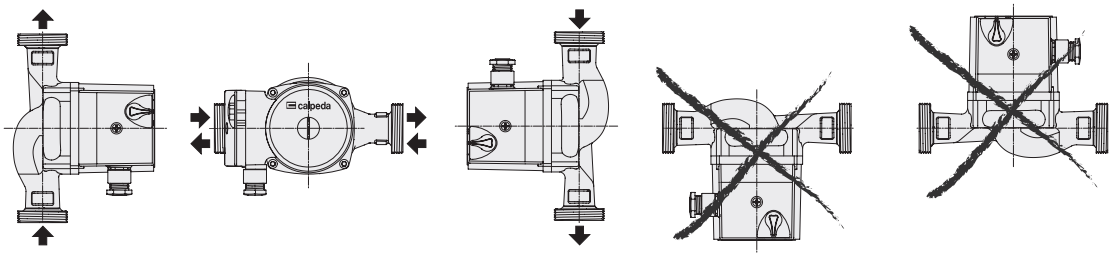

# IDROMAT

calpeda

**Diagram of head loss**

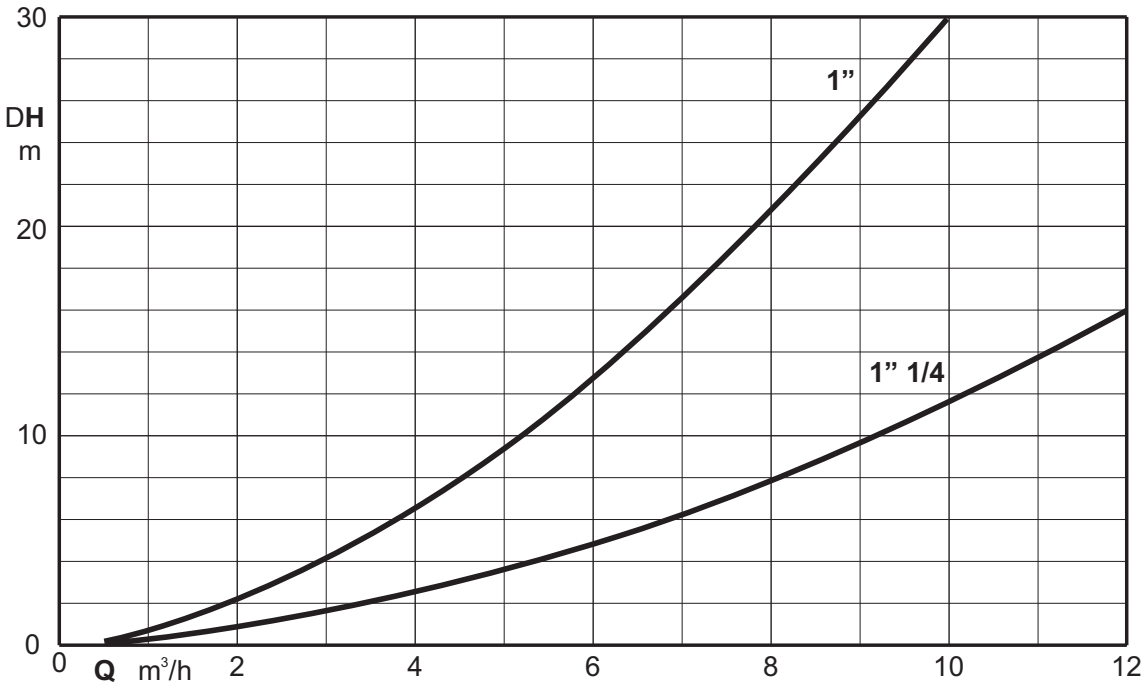


# Electronic regulator for pumps

# IDROMAT

## Construction

Pumps control device provided with flow rate and pressure sensor.
Inlet and delivery connection ports of the same diameter.
Built-in check valve.
Pressure gauge 0-12 bar supplied as standard for IDROMAT 5.. (IDROMAT 6.. not present).
Automatic reset function for the reset of the system without manual operation.

## Applications

Automatic control of pumps for water supply and increase of network pressure.
Control of starting/stopping of the pump when cocks are opened/closed.
**For protection of the pump:**

- against dry running;
- against the risk of operation without water at the inlet (caused by a lack of water inflow in the inlet pipe under positive suction head, by a non-immersed suction pipe, by excessive suctionlift or by air entering the suction pipe);
- against operation with closed connection ports.

## Materials

| Component | Material |
|---|---|
| Housing | Polyamide PA 6 G.F. reinforced |
| Membrane | Natural rubber |

## Comparison of pressure values

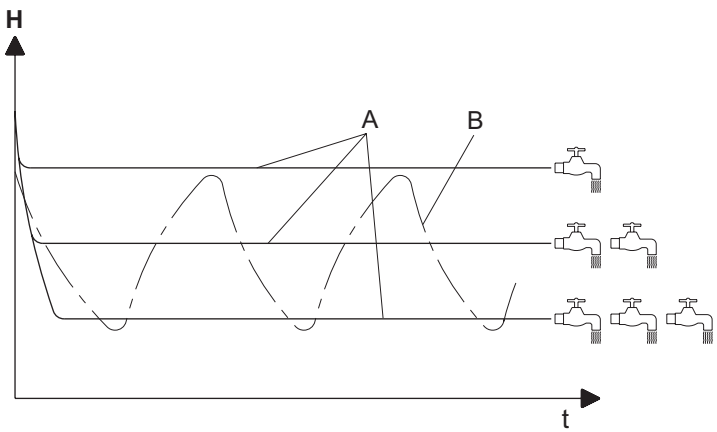


## Operating conditions

Mains voltage: single-phase 230 V ±10% Idromat 5e;
single-phase 115 - 240 V ±5% for Idromat 5, 6.
Frequency: 50 - 60 Hz.
Current values:
- 8A max during operation (16A max at start-up) for IDROMAT 5;
- 16A max during operation (30A max at start-up) for IDROMAT 6
Maximum pump motor power 1,5 kW (2,2 kW for IDROMAT 6).
Protection: IP 65.
Maximum working pressure: 12 bar (1,2 MPa)
Maximum Operating temperature up to 65 °C.
Minimum flow ~ 1 l/min.
Male connections 1” (1 1/4 for IDROMAT 6).

| TYPE | Switching-on pressure | Pump head |
|---|---|---|
| IDROMAT 5-12 | 1,2 bar | > 25 m |
| IDROMAT 5-15 | 1,5 bar | > 30 m |
| IDROMAT 5-22 | 2,2 bar | > 35 m |
| IDROMAT 5-30 | 3 bar | > 45 m |
| IDROMAT 6-15 | 1,5 bar | > 30 m |
| IDROMAT 6-30 | 3 bar | > 45 m |
| IDROMAT 5e | adjustable from 1,5 to 2,5 bar | 1,5 bar more than the expected restart pressure |

## Control Panel

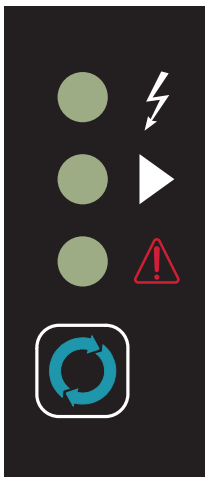

**Status indications and system reset**
The three leds give the information about the system operativity, the first led indicates the presence of supply, the second led indicates if the pump is operating and the third led indicates if an alarm has occurred in the system.
The Reset button allows to manually restart the system when an alarm occur.

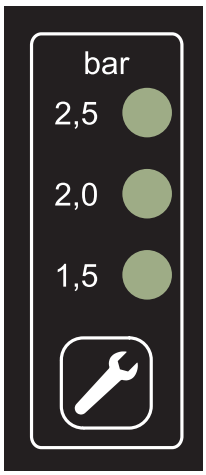


**Programming of the re-start pressure**
The display allows to visualize the re-start pressure of the system,
the buttons allow to change the re-start pressure value.

# IDROMAT

## Dimensions and weights

### IDROMAT 5

kg 1,2

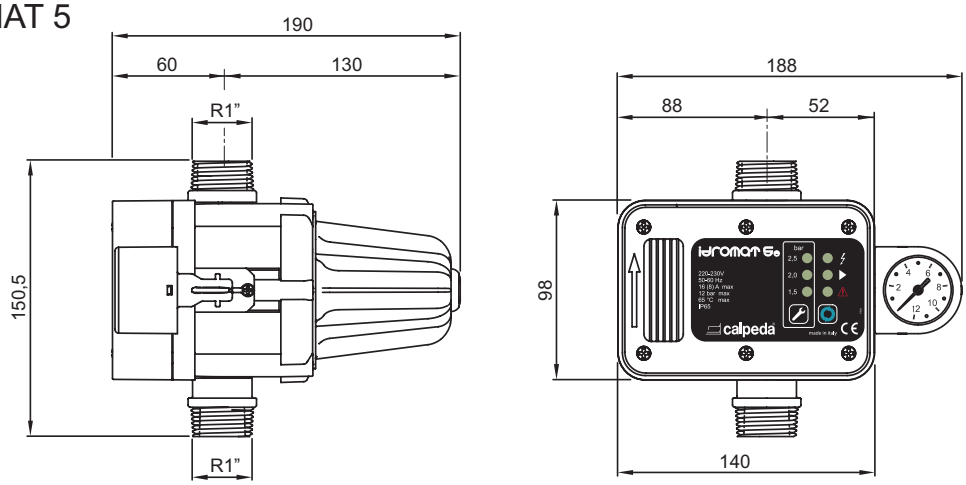


### IDROMAT 6

kg 1,5

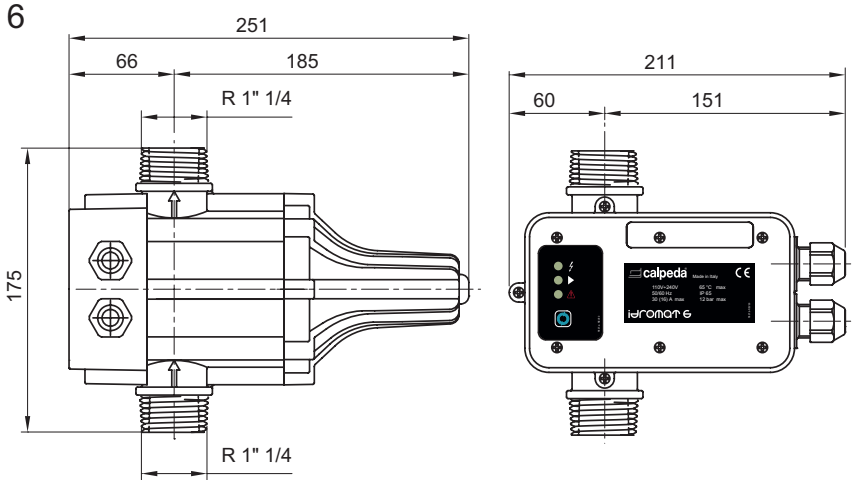


## Examples of installations

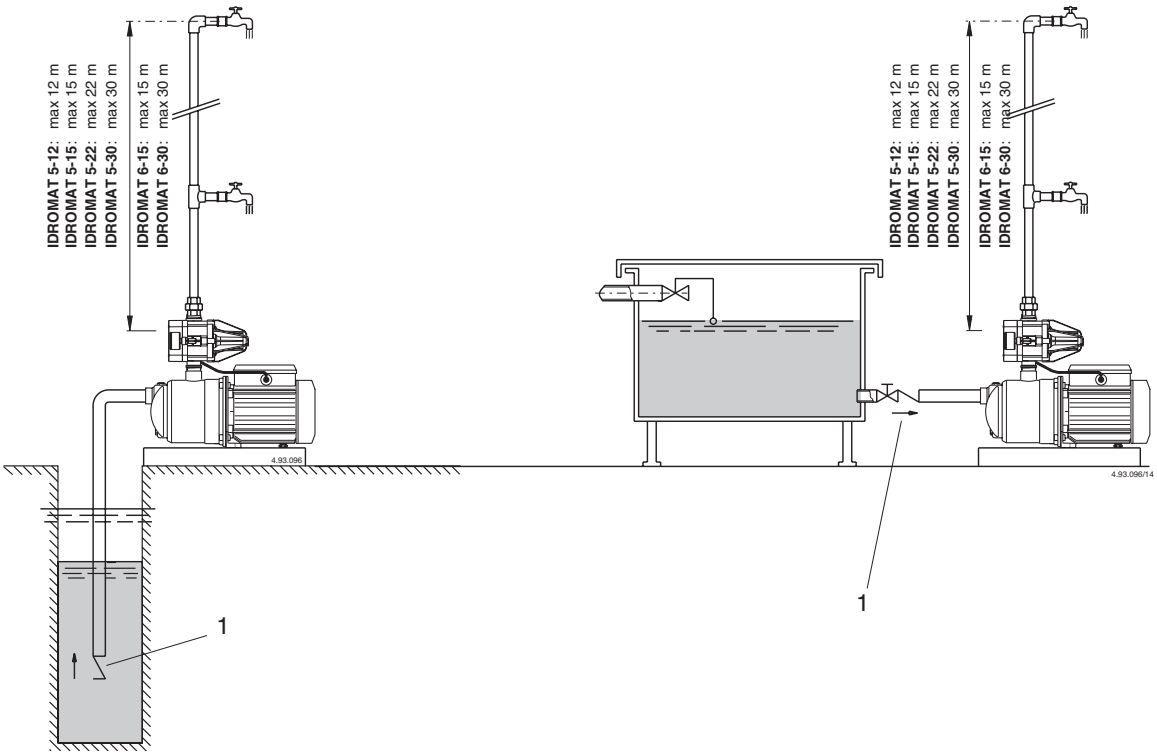


1 Foot valve

ed. 03/2025

# EASYMAT

## Features

- **Constant pressure**
- Via a frequency inverter keeps the pressure constant as the flow demand changes.
- **Energy saving**
- The variable speed operation ensures that only the energy required by the plant at any instant is used.
- **System reliability**
- Because the easymat is independent of the pumped liquid its operation is not affected by fluid impurity.
- A float switch can also be integrated to further protect against dry running.
- **Flexibility**
- Thanks to its patented design the easymat does not come into contact with the pumped fluid.
- This provides for more flexibility during installation eliminating the need for pipe-work modifications or the installation of isolating valves.
- **Easy to use**
- The easymat has a clear display making it very simple to set-up.
- **Cascade control mode**
- The system flexibility allows via a microprocessor for cascade operation of three easymats via one pressure transducer.

# Variable speed system driven by frequency converter

# EASYMAT

## Construction

Variable speed system driven by frequency converter, for the pressure control in domestic and residential plants.
The system is connected to the delivery pipe providing for simple installation and better cooling (patented) making the unit more compact and easy to assemble.
Easymat is supplied with one pressure transducer, G 1/4 connection and 1.5 m cable length.

## Applications

Automatic frequency inverter control for use on pumps to increase network pressure.
The system maintains constant pressure while regulating pump operation in response to changing system demands.
**For protection of the pump:**
- Against dry running
– Against operations with closed connection ports
– Against overcurrent of the motor
– Against overvoltage and undervoltage of the power supply

## Pump type

| Pump type | | Freqeuency converter max current output (A) | Standard power motor 230V (kW) |
|---|---|---|---|
| Single-phase | Easymat 9,2MM | 9,2 | 0,37 - 1,5 |
| Three-phase | Easymat 9,2MT | 9,2 | 0,37 - 2,2 |

## Standard execution

(Standard execution)
The system consists of:
- Frequency converter.
- Pressure transducer.
- Pipe housing.
- Terminal board
- Cable glands.
- Multi-hole gaskets.

**On request:**
Cradles for pipe connection.
Inlet filter and outlet filter.

## Operating conditions

IP55 protection rating.
Max Ambient temperature: 40°C
Liquid temperature up to 40°C.
Minimum Flow: 3 l/min
Altitude: no higher than 1000 m, inside a closed environment.

| | voltage: | | Frequence | |
|---|---|---|---|---|
| | Input | Output | Input | Output |
| EASYMAT MM | 1~ 230V ±10% | 1~ 230V | 50-60 Hz | fino a 70 Hz |
| EASYMAT MT | 1~ 230V ±10% | 3~ 230V | 50-60 Hz | fino a 70 Hz |

## Control Panel

Easymat is equipped with a control panel for simple system programming and parameter monitoring.
The 2 scroll buttons are used to scroll the different operating parameters that EASYMAT can show.
At the same time you can use the 2 scroll buttons to move in the set up menu and to change the different options.
The LCD custom display gives an easy overview of the system situation and of the operating parameters.
The icons on the top and below the display area explain in which way EASYMAT is working and if there are problems on the system.
The four set-up buttons allow the operator to move between and set-up the menu's options and to start and stop the pump.The symbols help to make the function of each button clear.
With these 4 buttons and the 2 scroll buttons you can manage all the set-up and operating parameters without the use of an other control panel or computer.

## Dimensions and weights

Weight: 1.9 kg

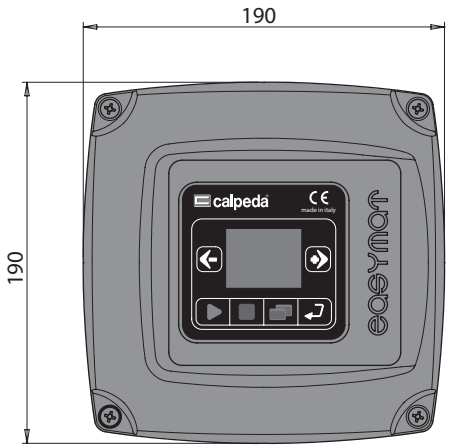


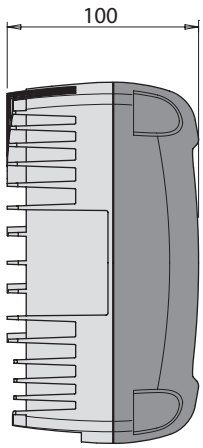

## Display LCD

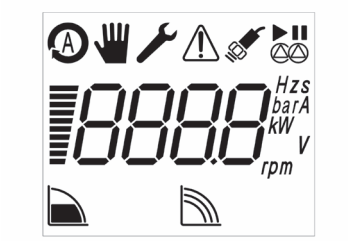


The integrated LCD custom display gives you an easy overview of the system situation and operating parameters.

**DISPLAY AREA**
The display area gives the status of the parameters of the pump.

The OPERATING ICONS show in which mode the system is operating:

**Constant pressure mode**
The system keeps the pressure constant when the quantity of water requested by the user changes.The user can choose the operating pressure according his needs.

**Fixed speed mode**
The system works at a fixed speed that user can choose according his needs.

The SYSTEM ICONS show in which way the system is operating:

**Auto Mode**
The icon shows that the system is operating in auto mode (constant pressure mode), the constant pressure mode it is indicated by the icon on the lower part of the display.

**Manual Mode**
The icon show that the system is operating in manual mode (fixed speed mode), with the navigation buttons the user can change the speed, the fixed speed mode is indicated by the icon on the lower part of the display.

**Set-up Mode**
The icon shows that the set-up menu is activated, in this mode it is possible to change all the operating parameters of the EASYMAT. With the navigations buttons it is possible to scroll the parameters and, if necessary, change them.

**Sensor State**
indicates the state of the pressure transducer connected to the EASYMAT, if lit it indicates that the pressure transducer is working, if it is blinking there is a fault or a incorrect connection of the pressure transducer.

**Alarm**
It indicates that there is a fault on the system, the error number appears on the display area.

**Cascade Mode**
It indicates that the multi-pump mode (up to 3 pumps) is working, the upper icon shows if the pump connected with the frequency converter is running or is in stand-by, the lower icon indicates if the pump is the master pump (the icon is lit) or the slave pump (the icon is blinking).

# EASYMAT

## Examples of installations

**One pump installation scheme**

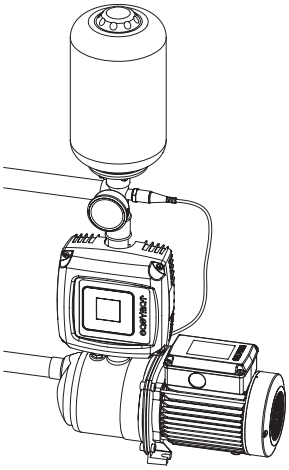

**Two pumps installation scheme**

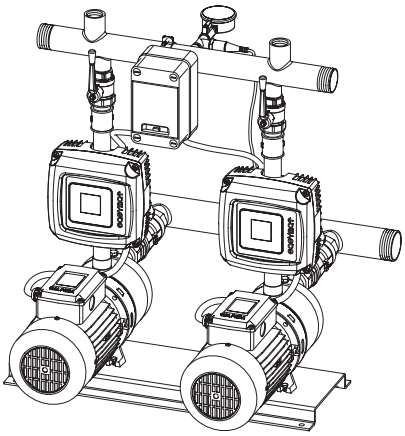

**Three pumps installation scheme**

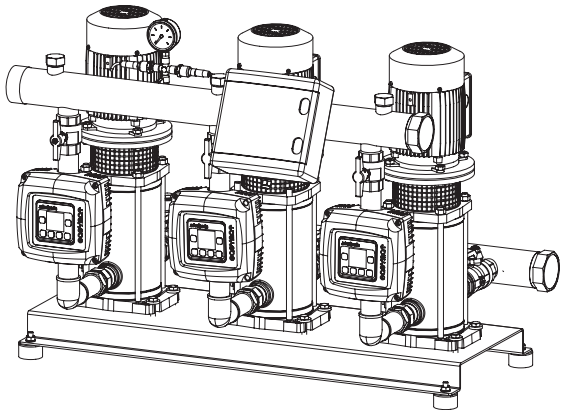

## Plant examples

With EASYMAT it is easy to create a variable speed system starting from a existing fixed speed system without disturbing the existing pipe-work.
To create the variable speed system it is only necessary to:
- Disconnect the pressure switch from the system and, in the same housing connect the pressure transducer.
- Connect EASYMAT to the pipe.
- Connect EASYMAT to electric motor.
- Connect the supply cable to the electric grid.

**Existing fixed speed version**

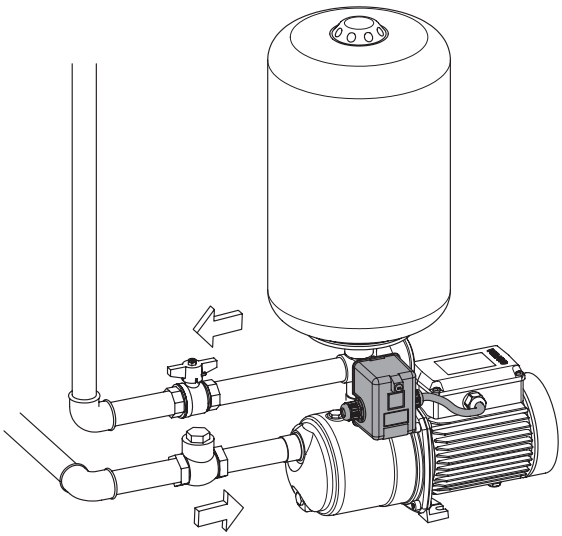

**Variable speed system version**

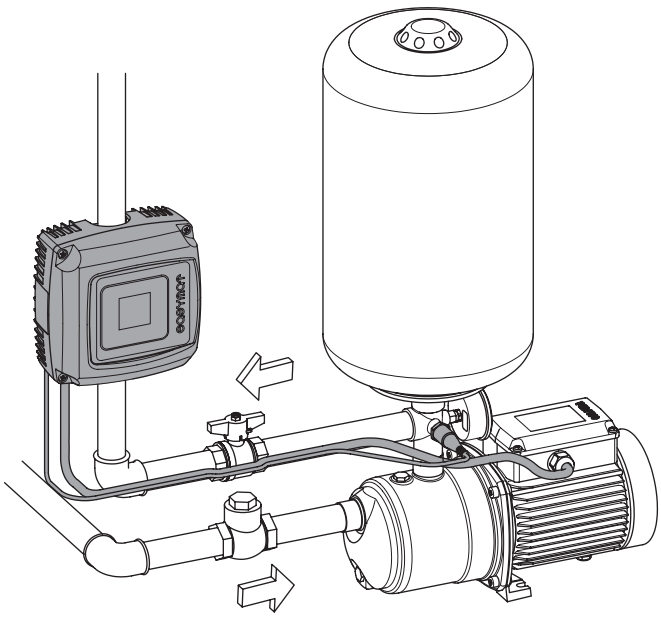

# I-MAT

calpeda

## Features

- **Flexibility**
- I-MAT frequency converters are equipped with a software which provide different operating modes in order to cover a wide range of applications.
- **Reliable**
- The high efficiency heatsink with integrated fans cools the frequency converter independently from the motor, to provide a higher reliability of the system.
- **Safety**
- The design of the I-MAT frequency converters separates the signal terminal area from the power terminal area, allowing the user to safely work with the signal connections
- **Easy to use**
- The integrated control panel allows all parameters to be programmed directly on the frequency converter. Additionally, the control panel can be detached and remotely mounted using a connection cable.
- **Cascade control mode**
- The system flexibility allows, with an optional electronic card, to assemble more units making them communicate together. The system is capable of managing variable speed pumps (up to 6) and fixed speed pumps (up to 5).

## Construction

The system features variable speed control driven by a frequency converter, designed for motor control in water supply applications and the production/distribution of hot and cold water.
I-MAT is an integrated control system that, when applied to the motor, enables the management of a wide range of applications and operating modes.
Classification scheme IE2

## Applications

Frequency converter for automatic pump control suitable for:
- water supply
- water transport and distribution
- production and distribution of hot/cold water
- water treatment

**For protection of the pump:**
– against dry running;
– against operation with closed connection ports.
- Against overcurrent of the motor
- Against overvoltage and undervoltage of the power supply
- Against unbalance or missing supply phases.

## Operating conditions

Input voltage: 3~380V-10% ÷ 3~480V+5%
Output voltage: 0 ÷ 100% of the input voltage
Input frequency: 50-60 Hz
Output frequency: up to 70 Hz
Protection: IP55
Max Ambient Temperature: 50°C
Altitude: no higher than 1000 m, inside a closed environment.

## Standard execution

(Standard execution)
The system consists of:
- Frequency converter.
- Removable control panel
- Power terminal board
- Signals terminal board
- Cable glands.

**On request:**
- Motor adapter for the motor mounting of the frequency converter
- Adapter for wall mounting
- Pressure and temperature transducer
- Main switch
- Line filter and output filter
- Modbus Kit
- Multi-pump board

## Pump type

| Type three-phase | Max. VFD output current | Typical motor power 400V |
|---|---|---|
| | (A) | (kW) |
| I-MAT 5,2 TT-A | 5,2 | 0,55 ÷ 1,8 |
| I-MAT 11,2 TT-B | 11,2 | 2,2 ÷ 4 |
| I-MAT 25,8 TT-C | 25,8 | 5,5 ÷ 11 |
| I-MAT 65,4 TT-D | 65,4 | 15 ÷ 30 (37)* |
| I-MAT 119 TT-E | 119 | 37 ÷ 55 |

* 2-pole 37 kW

# Variable speed system driven by frequency converter

# I-MAT

## Operating modes

**Constant pressure mode**
The system keeps the pressure constant when the quantity of water requested by the user changes.The user can choose the operating pressure according his needs.

**Proportional pressure modes**
Proportional pressure reduces the pressure of the pump (and as a consequence, the operating frequency) proportionally with the water demand of the system.

**Constant temperature mode**
In this operating mode the system is used to keep the temperature at a constant value in a specified system point.

**Constant flow mode**
Constant flow mode grants that system change the speed of the pump in order to keep constant the flow which pass inside a flow meter.

**Fixed speed mode**
In this operating mode the system work as a fixed speed pump. The speed of the pump could be set by the user between a range of speeds, or controlled by an external signal.

**Night mode**
The night mode is an optional mode which allows to reduce the speed of the pump if the temperature in the system decreases below a set value, this operating mode can be used with all operating modes over described.

## Control Panel

I-MAT is equipped with a control panel that allows to carry out the set-up of the system and to monitor all system parameters.
The control panel is inside a IP55 enclosure which is possible to rotate and install in remote positions.
It is possible use the control panel in remote positions by means a cable with M12 connectors (standard cable).
The LCD custom display gives an easy overview of the system situation and of the operating parameters.
The icons on the top and below the display area explain in which way i-MAT is working and if there are some problems on the system.
The 2 scroll buttons are used to scroll the different operating parameters that i- MAT can show. At the same time you can use the 2 scroll buttons to move in the set up menu and to change the different options.
At the same time you can use the 2 scroll buttons to move in the set up menu and to change the different options.
The 4 set-up buttons are created to enter and to move on the set-up menus and to start and to stop the pump. The symbols help to understand the function of each button. With these 4 buttons and the 2 scroll buttons you can manage all the set-up and operating parameters without the use of another control panel or computers.The symbols help to make the function of each button clear.With these 4 buttons and the 2 scroll buttons you can manage all the set-up and operating parameters without the use of an other control panel or computer.

## Dimensions and weights

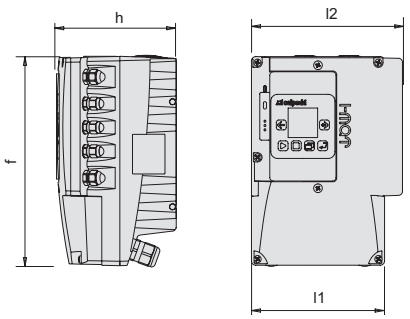


| Pump type | mm | | | | kg |
|---|---|---|---|---|---|
| | h | f | l1 | l2 | |
| I-MAT 5,2 TT-A | 165 | 263 | 170 | 190 | 5,8 |
| I-MAT 11,2 TT-B | 165 | 292 | 185 | 210 | 6,7 |
| I-MAT 25,8 TT-C | 207 | 336 | 255 | 281 | 13,5 |
| I-MAT 65,4 TT-D | 288 | 460 | 320 | 350 | 33 |
| I-MAT 119 TT-E | 336 | 700 | 424 | 455 | 59 |

# I-MAT

## Features

**1 Control Panel**
The integrated control panel gives the customer the possibility to set all the parameters of the frequency converter.

**2 Main switch**
The frequency converters have the possibility (optional) to install a main switch.

**3 Optional modules**
On the front side of the frequency converter are predisposed compartments for connecting the optional modules.

**4 I/O connection area**
The connection area for the input/outputs is separated from the power connection area, this solution allows to connect external.

**5 Power connection area**
The connection area is protected by a safety cover.

**6 Heatsink**
The high efficiency heat sink cooled by fans guarantees a high reliability. The side connection system allows an easy connection with the motors.

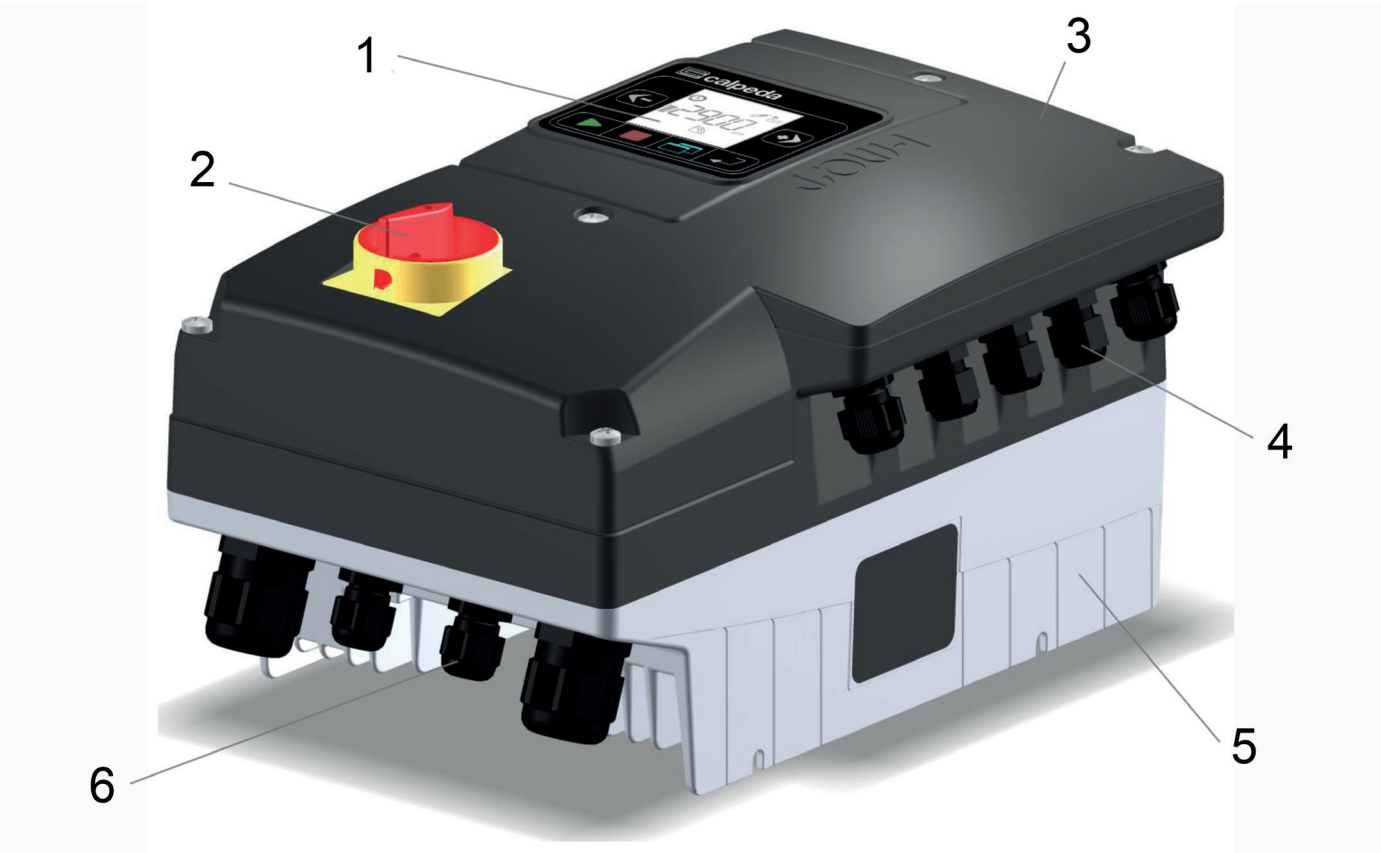

## Examples of installations

**One pump installation scheme**

MXH EI

NM EI

NR EI

MXV EI

**Two pumps installation scheme**

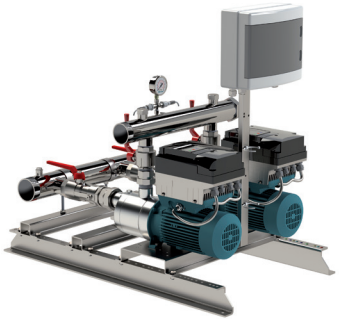

2 MXH

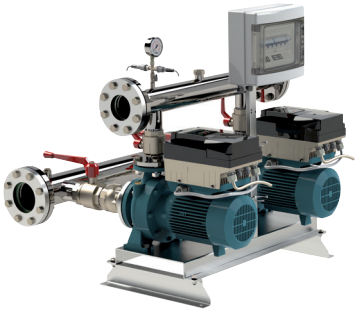

2 NM

2 MXV

**Three pumps installation scheme**

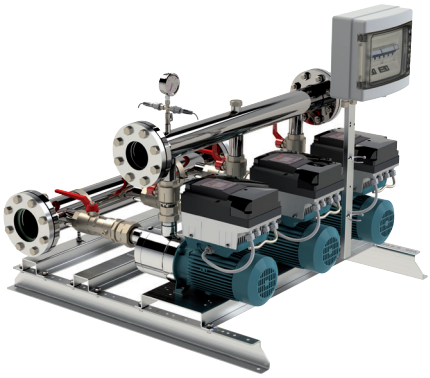

3 MXH

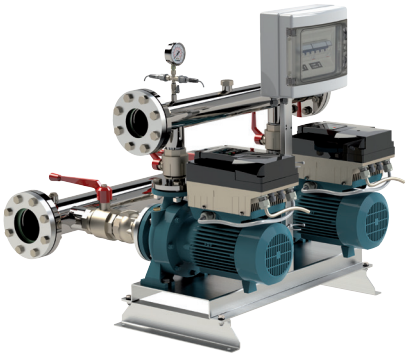

3 NM

3 MXV

ed. 10/2025

# BS

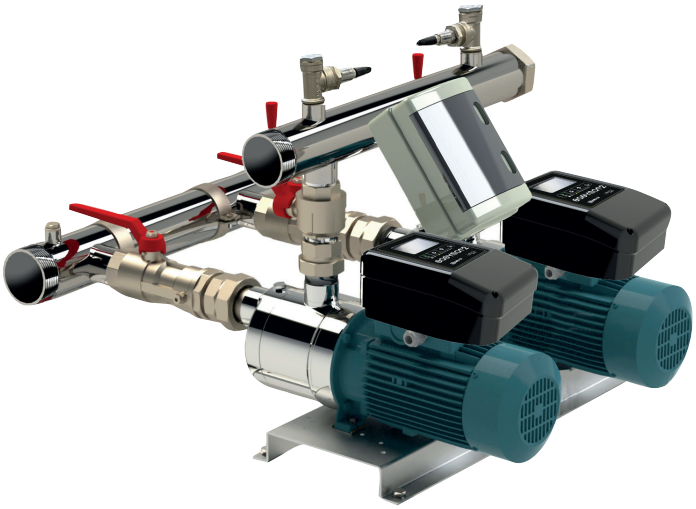

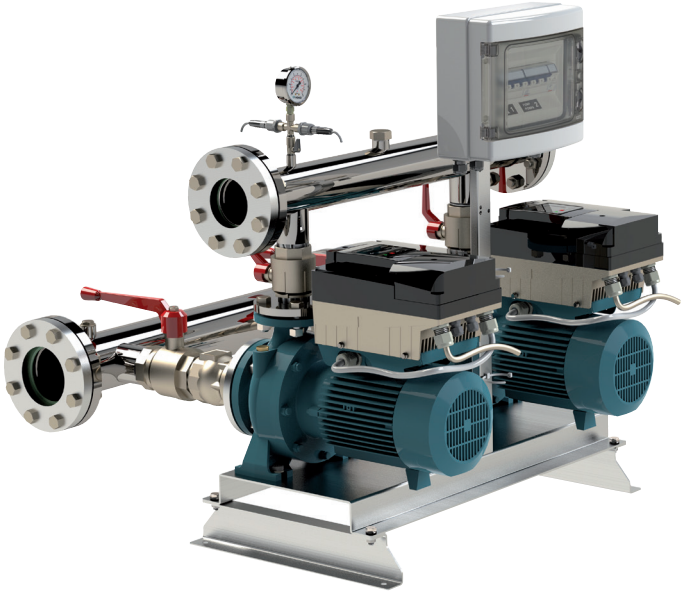

# Pressure units with fixed and variable speed pumps

# BS

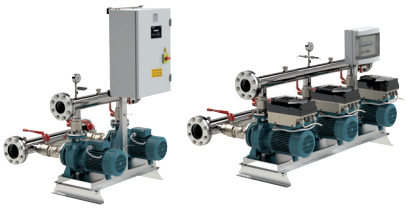

**Pressure units NM, NMD series** Page 635

BS .F fixed speed 2/3 pumps
BS .V variable speed with I-MAT 2/3 pumps

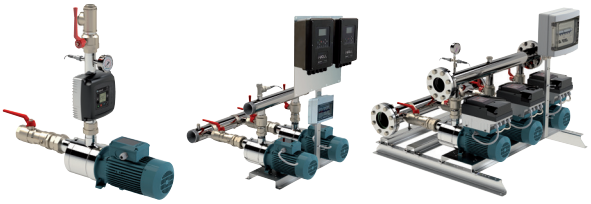

**Pressure units series MXH** Page 653

BS .F fixed speed 2/3 pumps
BS .V variable speed with EASYMAT 1/3 pumps
BS .V variable with EASYMAT2 2 pumps
BS .V variable with WALL 2 pumps
BS .V variable speed with I-MAT 2/3 pumps

**MPSU series pressure units** Page 668

BS .F fixed speed 2/3 pumps
BS .V variable speed with EASYMAT 1/3 pumps

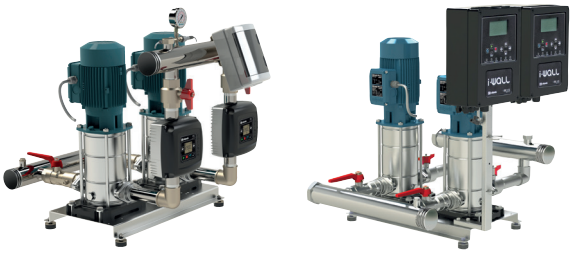

**Pressure units series MXVB** Page 676
BS .V variable speed with EASYMAT 1/3 pumps
BS .V variable with EASYMAT2 2 pumps
BS .V variable with WALL 2 pumps

**Pressure units series MXV** Page 684

BS .F fixed speed 1/3 pumps
BS .V variable with WALL 2 pumps
BS .V variable speed with I-MAT 2/3 pumps

## Designation

Example: BSM 2V 1F 2 MXV 25/204 - E MT
BS = Product Series (Booster Sets)
M = single-phase power supply (no indication: three-phase power supply)
2V = 2 variable speed pumps
1F = 1 fixed speed pump
2 = No. of pumps
MXV 25/204 = Pump type
E = Series E: EASYMAT (Series I: I-MAT)
M = single-phase power supply (T: three-phase power supply)
T = Three-phase motor (M: single-phase motor)

# BS

**BSF**
2 and 3 fixed speed pumps

## Construction

Pressure boosting sets with automatic operation, consisting in 2 and 3 pumps on a common baseplate, with sunction and delivery manifolds, gate and non-return valves, pressure switches, pressure gauge, control panel.

**BS 2F**
2 fixed speed pumps

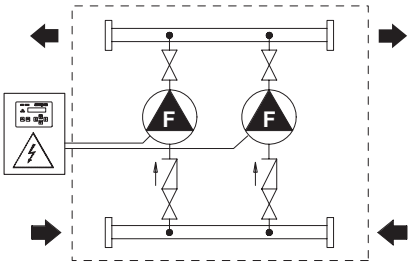


**BS 3F**
3 fixed speed pumps

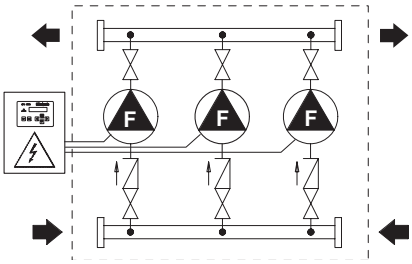


## Functioning mode

The control panel, with electronic card, manages the pump operation, the changeover of pump starting sequence and it stops the system when there is no air in the tank (patented system).
Pumps starting in a cascade sequence, with a signal from the pressure switches.

**BS 2F**
2 fixed speed pumps

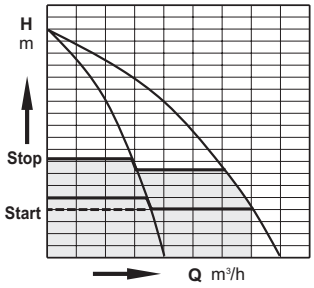


**BS 3F**
3 fixed speed pumps

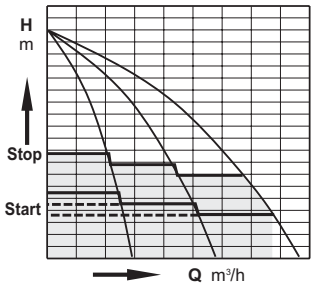

# BS

**BSV**
2-6 variable speed pumps (with frequency converter)

## Construction

Pressure boosting sets with automatic operation, consisting of variable speed pumps (from 1 to 6) with frequency converter, assembled on a common baseplate, with suction and delivery manifolds,

## Functioning mode

The control panel, with electronic card, manages the pump operation, the changeover of pumps starting sequence.
Pumps starting is in a cascade sequence, with a signal from the pressure transducer.

**BS 2V**
2 fixed speed pumps

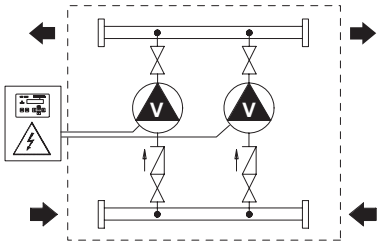


**BS 3V**
3 fixed speed pumps

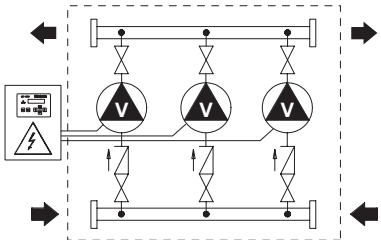


**BS 2V**
2 fixed speed pumps

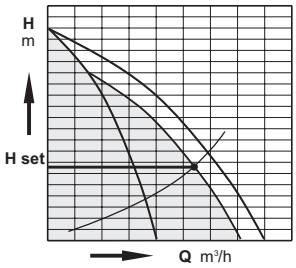


**BS 3V**
3 fixed speed pumps

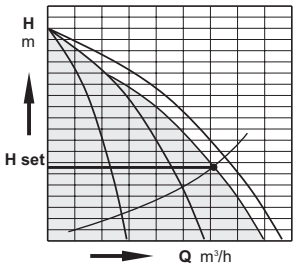

# BS

**Fixed speed pump units**

**Fixed speed pump units New electrical control panels**
New electrical control panels for pressurisation units, all with electronic card with microprocessors, for managing pump operation.
The microprocessor carries out continuous secure checks during all the various work phases of the pumps and incorporates all necessary functions, thus reducing electrical and electronic components inside the panel.

**In particular:**
- pumps starting in a cascade sequence according to water demand.
- changeover of pump starting sequence.
- delay start-up of the 2nd/3rd pump in case of breakdown of pressure switch 1 or after a power cut.
- avoid pump starting in case of water hammering.
- activate the alarm when pressure 1 fails.
- activate the alarm when air cushion in the vessel drops.
- stop the pump when air cushion is over.

**Maximum clarity for all signals**
The status of the unit can easily be identified on the front of the electronic card with the following signals:
- Power on.
- No water.
- Failure.
- Pump running.
- Thermal block.
- Pump automatic operation.
- Pump stop.

**Maximum simplicity of control**
The front of electronic card features the following signals and controls:
- AUT-STOP push-button (1 for each pump)
- MAN push-button (1 for each pump)
- RESET push-button.

**Optional remote control**
The RA 100 panel enables a remote warning light and acoustic signal.
**Control panel for units up to 6 pumps**
Using the MPS 6000 (Multi Pumps System) electronic card it is possible to control pressure units up to a maximum of 6 fixed speed pumps with a single pressure calibration.

**Automatic air supply systems**
The pump control panels are completed by microprocessor controlled systems for automatic air supply in the pressure vessels by means of a compressor or solenoid valve. Operation

**Functioning mode**
For booster sets made up to three pumps: according to the pressure decrease in the system, the pressure switches (pressure transducer for 3-pump sets) make the pumps to start in cascade mode and the starting changeover is made by the microprocessor.
For sets made of 4, 5, 6 pumps: Operation controlled by a microprocessor with signal from a pressure transducer. The pumps operate with only one pressure setting.

# BS

**Variable speed pump units with EASYMAT**

**EASYMAT for variable speed pump units.**
Variable speed system driven by frequency converter, for the pressure control in domestic and residential plants.
The system maintains constant pressure whilst the controlling the pump operation against changing system demand.

**Maximum clarity for all signals**
Easymat is equipped with a control panel for simple system programming and parameter monitoring.
2 scroll buttons are used to scroll the different operating parameters that EASYMAT can show.
At the same time you can use the 2 scroll buttons to move in the set up menu and to change the different options.
The LCD custom display gives an easy overview of the system situation and of the operating parameters.
The icons on the top and below the display area explain in which way EASYMAT is working and if there are problems on the system.
The four set-up buttons allow the operator to move between and set-up the menu's and to start and stop the pump.The symbols help to make the function of each button clear.
With these 4 buttons and the 2 scroll buttons you can manage all the set-up and operating parameters without the use of an other control panel or computer.

**Functioning mode**
Depending on water consumption, one or more pumps are activated, all at variable speed, in order to guarantee the quantity of water required at the set pressure.

The system is connected to the delivery pipe providing for simple installation and better cooling (patented) making the unit more compact and easy to assemble.
Easymat is supplied with one pressure transducer, G 1/4 connection and 1.5 m cable length.

**For protection of the pump:**
- Against dry running
- Against operations with closed connection ports
- Against overcurrent of the motor
- Against overvoltage and undervoltage of the power supply

**Silent operation**
Motors operating at reduced speed, combined with check valves that close gradually, ensure particularly quiet operation.

**Long life for pumps**
All the mechanical components of the pumps and motors are stressed to a minimum, due to the variable speed operation.

**Energy saving**
The motors consume only the precise amount of power needed at any given moment to supply the required water quantity for the system.

**No more high capacity vessels**
The use of inverters means that high capacity pressure vessels and membrane vessels are no longer necessary. Even units with high flowrate pumps only require a small-sized vessel, such as a 20-liter membrane vessel.

**Constant pressure mode**
The system keeps the pressure constant when the quantity of water requested by the user changes.The user can choose the operating pressure according his needs.

**Fixed speed mode**
The system works at a fixed speed that user can choose according his needs.

# BS

**Variable speed pump units with EASYMAT2**

**EASYMAT2 for variable speed pump units.**
Variable speed system driven by frequency converter, for the pressure control in domestic and residential plants.
The system maintains constant pressure whilst the controlling the pump operation against changing system demand.

**Maximum clarity for all signals**
EASYMAT2 is equipped with a control panel for simple system programming and parameter monitoring.

2 scroll buttons are used to scroll the different operating parameters that EASYMAT can show.
At the same time you can use the 2 scroll buttons to move in the set up menu and to change the different options.

The LCD custom display gives an easy overview of the system situation and of the operating parameters.
The icons on the top and below the display area explain in which way EASYMAT2 is working and if there are problems on the system.
**Functioning mode**
Depending on water consumption, one or more pumps are activated, all at variable speed, in order to guarantee the quantity of water required at the set pressure.

**For protection of the pump:**
- Against dry running
- Against overcurrent of the motor
- Against overvoltage and undervoltage of the power supply

**Silent operation**
Motors operating at reduced speed, combined with check valves that close gradually, ensure particularly quiet operation.

**Long life for pumps**
All the mechanical components of the pumps and motors are stressed to a minimum, due to the variable speed operation.

**Energy saving**
The motors consume only the precise amount of power needed at any given moment to supply the required water quantity for the system.

**No more high capacity vessels**
The use of inverters means that high capacity pressure vessels and membrane vessels are no longer necessary. Even units with high flowrate pumps only require a small-sized vessel, such as a 20-liter membrane vessel.

**Constant pressure mode**
The system keeps the pressure constant when the quantity of water requested by the user changes.The user can choose the operating pressure according his needs.

**Fixed speed mode**
The system works at a fixed speed that user can choose according his needs.

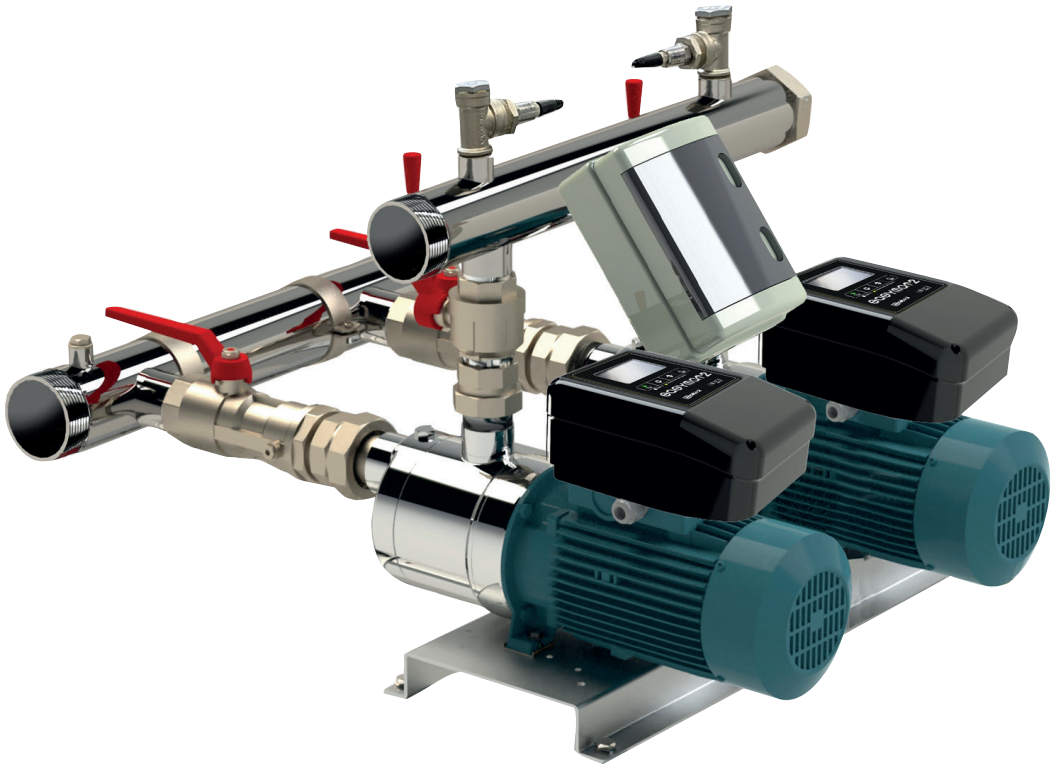

# BS

**Variable speed pump units with WALL**

**WALL for variable speed pump units.**
Variable speed system driven by frequency converter, for the pressure control in domestic and residential plants.
The system maintains constant pressure whilst the controlling the pump operation against changing system demand.

**Maximum clarity of signals**
WALL is equipped with a control panel that allows to carry out the set-up of the system and to monitor all system parameters.
The 4 set-up buttons are created to enter and to move on the set-up menus and to start and to stop the pump. The symbols help to understand the function of each button. With these 4 buttons and the 2 scroll buttons you can manage all the set-up

**For protection of the pump:**
- Against dry running
- Against overcurrent of the motor
- Against overvoltage and undervoltage of the power supply

**Functioning mode**
Depending on water consumption, one or more pumps are activated, all at variable speed, in order to guarantee the quantity of water required at the set pressure.

**Silent operation**
Motors working at reduced speed and check valves that close gradually mean that operation is particularly quite.

**Long life for pumps**
All the mechanical components of the pumps and motors are stressed to a minimum, due to the variable speed operation.

**Energy saving**
The motors consume only the precise amount of power needed at any given moment to supply the required water quantity for the system.

**No more high capacity vessels**
The use of inverters means that high capacity pressure vessels and membrane vessels are no longer necessary. Even units with high flowrate pumps only require a small-sized vessel, such as a 20-liter membrane vessel.

**Constant pressure mode**
The system keeps the pressure constant when the quantity of water requested by the user changes.The user can choose the operating pressure according his needs.

**Fixed speed mode**
In this operating mode the system work as a fixed speed pump. The speed of the pump could be set by the user between a range of speeds, or controlled by an external signal.

# BS

**Variable speed pump units with I-MAT**

**I-MAT for variable speed pump units.**
Variable speed system driven by frequency converter, for the pressure control in domestic and residential plants.
The system maintains constant pressure whilst the controlling the pump operation against changing system demand.

**Maximum clarity of signals**
I-MAT is equipped with a control panel that allows to carry out the set-up of the system and to monitor all system parameters.
It is possible use the control panel in remote positions by means a cable with M12 connectors (standard cable).
The LCD custom display gives an easy overview of the system situation and of the operating parameters.
The 4 set-up buttons are created to enter and to move on the set-up menus and to start and to stop the pump. The symbols help to understand the function of each button. With these 4 buttons and the 4 scroll buttons you can manage all the set-up

**For protection of the pump:**
- Against dry running
- Against operations with closed connection ports
- Against overcurrent of the motor
- Against overvoltage and undervoltage of the power supply
- Against overvoltage and undervoltage of the power supply

**Functioning mode**
Depending on water consumption, one or more pumps are activated, all at variable speed, in order to guarantee the quantity of water required at the set pressure.

**Silent operation**
Motors operating at reduced speed, combined with check valves that close gradually, ensure particularly quiet operation.

**Long life for pumps**
All the mechanical components of the pumps and motors are stressed to a minimum, due to the variable speed operation.

**Energy saving**
The motors consume only the precise amount of power needed at any given moment to supply the required water quantity for the system.

**No more high capacity vessels**
The use of inverters means that high capacity pressure vessels and membrane vessels are no longer necessary. Even units with high flowrate pumps only require a small-sized vessel, such as a 20-liter membrane vessel.

**Constant pressure mode**
The system keeps the pressure constant when the quantity of water requested by the user changes.The user can choose the operating pressure according his needs.

**Proportional pressure modes**
Proportional pressure reduces the pressure of the pump (and as a consequence, the operating frequency) proportionally with the water demand of the system.

**Constant temperature mode**
In this operating mode the system is used to keep the temperature at a constant value in a specified system point.

**Constant flow mode**
Constant flow mode grants that system change the speed of the pump in order to keep constant the flow which pass inside a flow meter.

**Fixed speed mode**
In this operating mode the system work as a fixed speed pump. The speed of the pump could be set by the user between a range of speeds, or controlled by an external signal.

**Night mode**
The night mode is an optional mode which allows to reduce the speed of the pump if the temperature in the system decreases below a set value, this operating mode can be used with all operating modes over described.

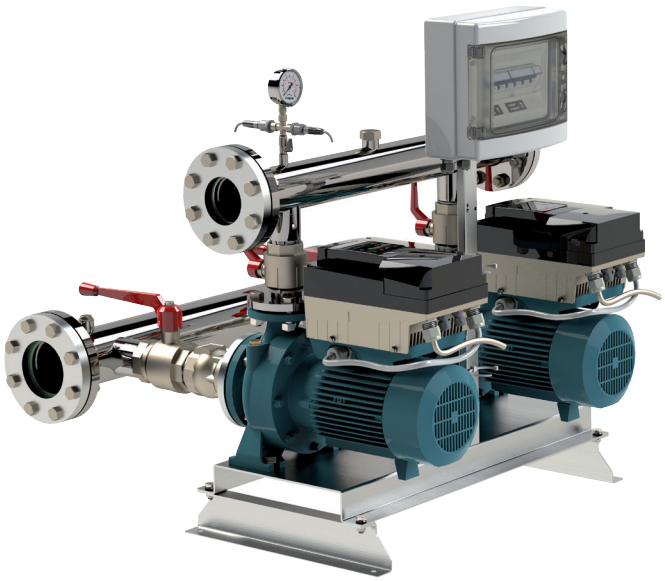

# BS, NM, NMD

Pressure units with 1 to 3 fixed or variable speed centrifugal pumps (INVERTER)

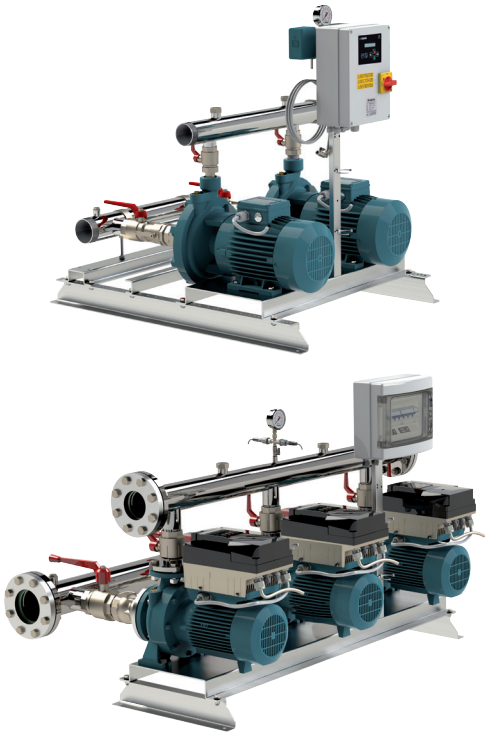

## Fixed speed units

BS 2-6F Units with 2 to 6 fixed speed pumps
Sets with 4,5 and 6 pumps on request.
Depending on the reduction of the pressure in the system, the pressure switches (pressure transducer for 3-pump sets) determine the starting up of the pumps in sequence and the microprocessor alternates the starts.

## Variable speed units with I-MAT

BS2-3V Pressure boosting sets with 2 to 3 variable speed pumps (with I-MAT).
Depending on water consumption, one or more pumps are activated, all at variable speed, in order to guarantee the quantity of water required at the set pressure.

## Coverage chart

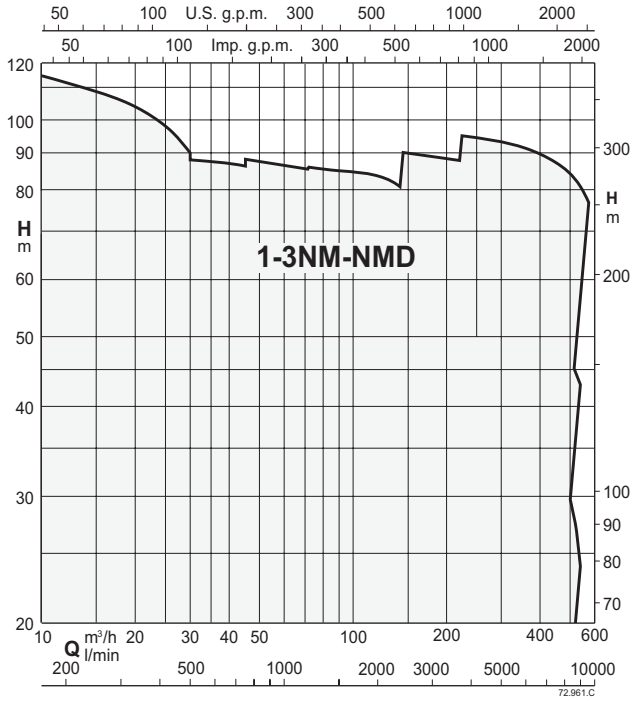


## Construction

Automatic pressure boosting plant consisting of 1 to 6 centrifugal pumps complete with ball, non return valve on the suction side and ball valves on the delivery side.
Suction and delivery manifolds for boosting
- stainless steel AISI 304 up to 2NM 40.. and 3NM 32...
- steel S235JR from 2NM 50.. and 3NM 40... .

Set up for mounting cylindrical tanks with G1 connection.
Electrical control boards:
- with microprocessor for fixed speed pump units.Motor starting is D.O.L. up to 5,5 kW and Y/Δ for power rating 7,5 up to 55 kW.
- with frequency converter for variable speed pump units.

The unit includes one pressure gauge and three adjustable differential pressure switches or pressure transducer.

## Applications

To supply water in civil and industrial buildings.
For increasing network pressure (follow local specifications).

## Motor

2-pole induction motors, 50 Hz, n ≈ 2900 1/min, set up for inverter operation.
Three-phase: 230/400V ± 10% up to 3 kW;
400/690V ± 10% for 4 kW to 55 kW;
Insulation class F.
Protection IP54
Constructed in accordance with: IEC 60034.
Other voltages and frequencies on request.

## Vessels on request

When installing the unit, connect in the delivery section to a diaphragm or galvanised tank.
The recommended sized are shown in the following page.

## Special features on request

Pressure unit with 4, 5 and 6 pumps

# BS, NM, NMD

## Characteristic curves

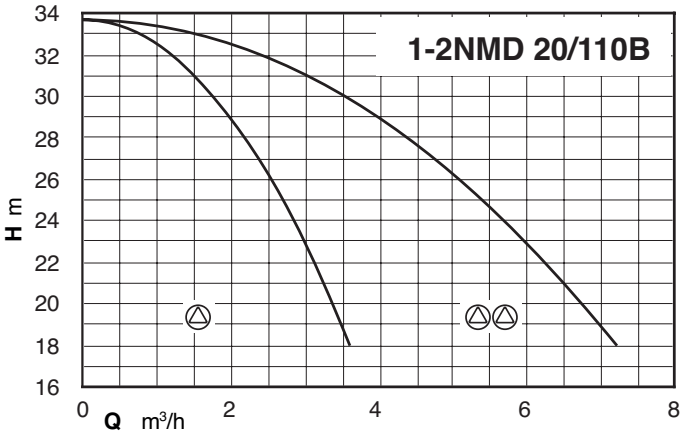


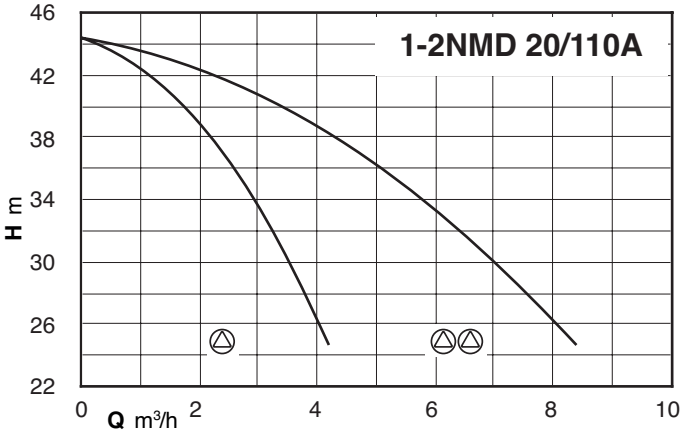


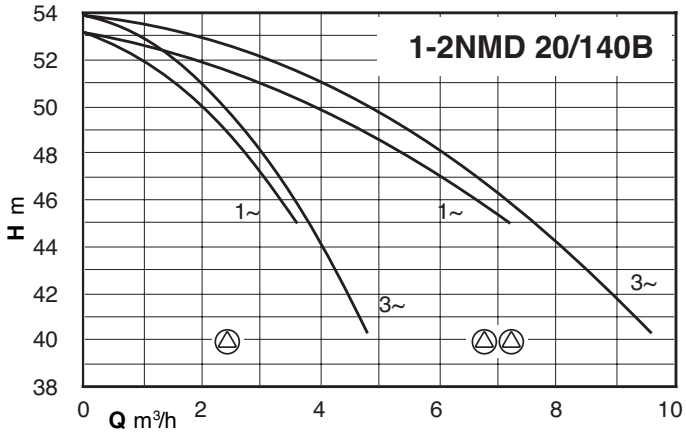


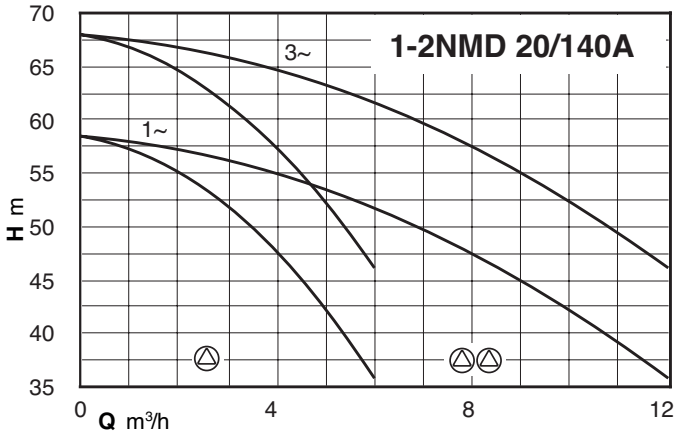


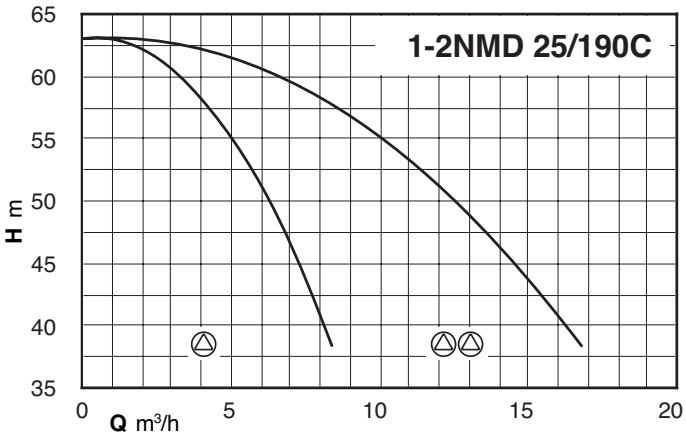


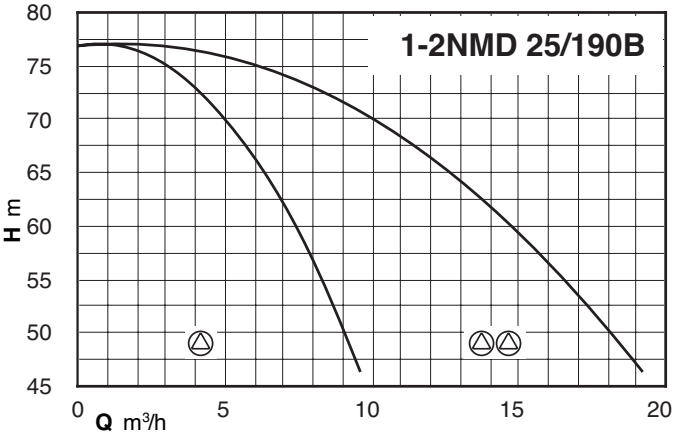


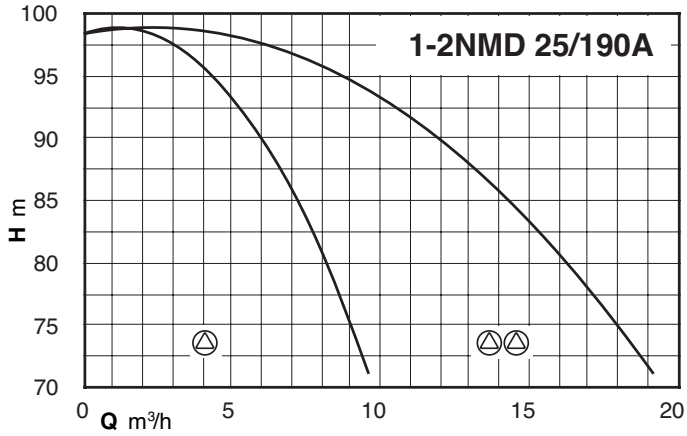

# BS, NM, NMD

## Characteristic curves

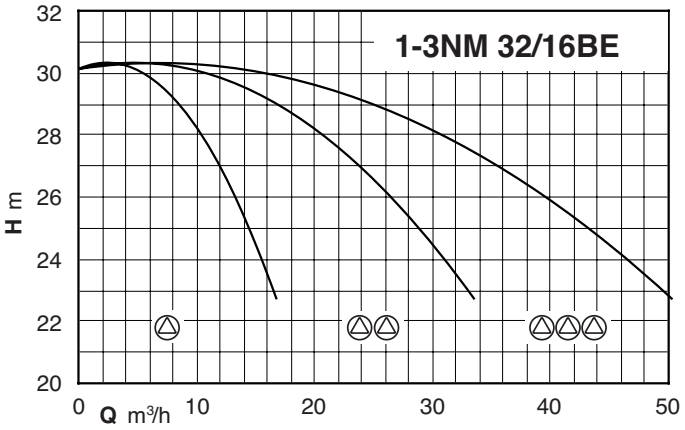


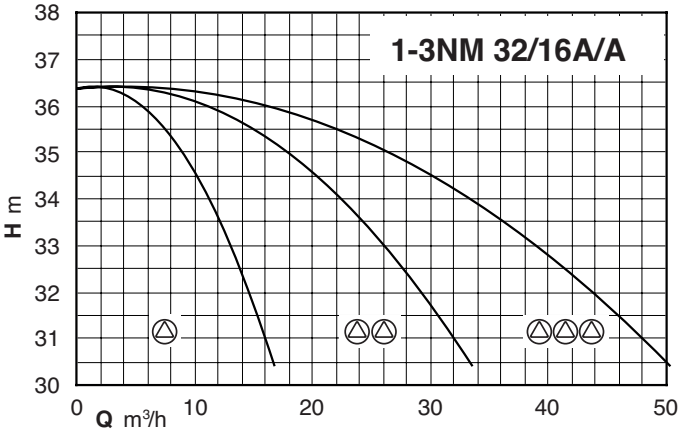


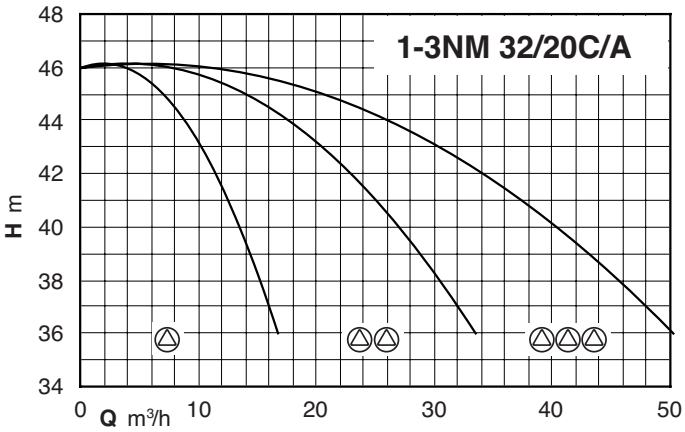


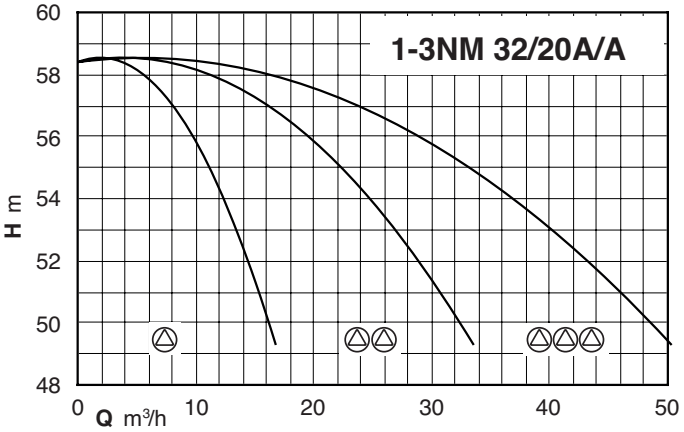


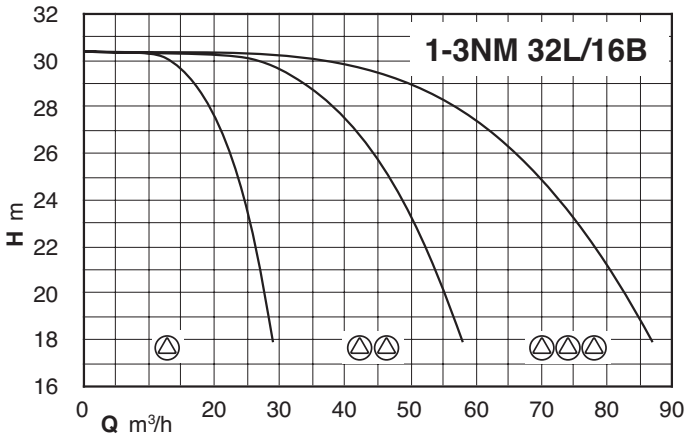


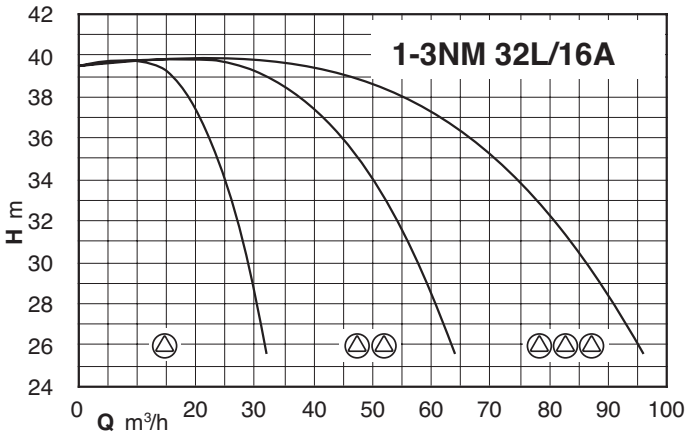


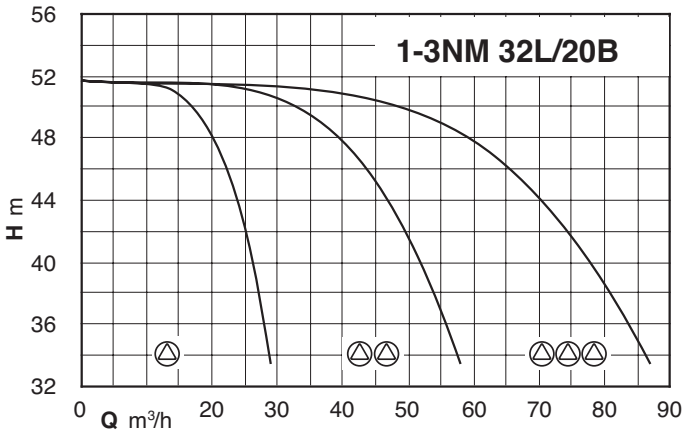


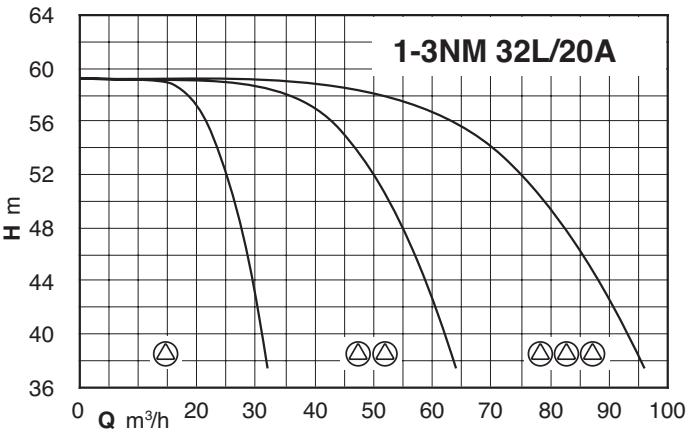

# BS, NM, NMD

## Characteristic curves

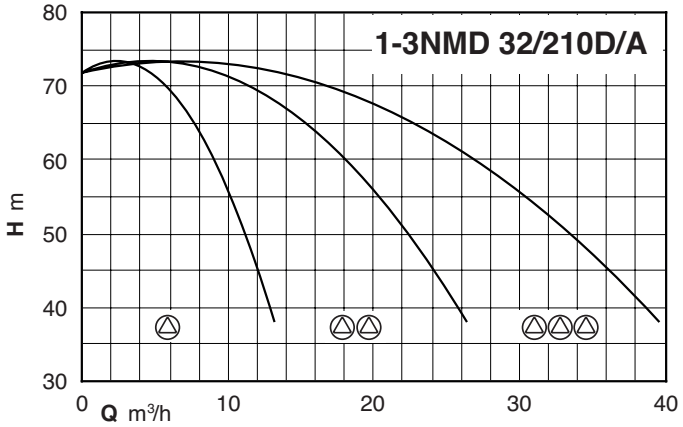


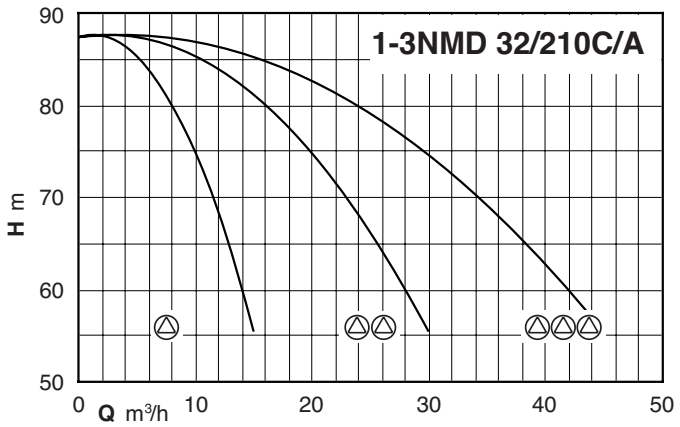


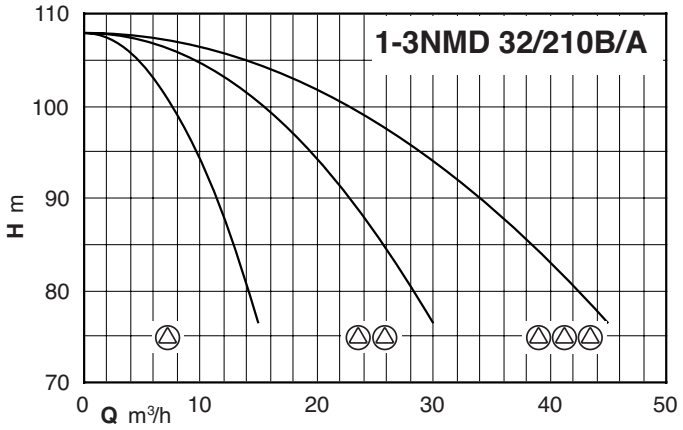


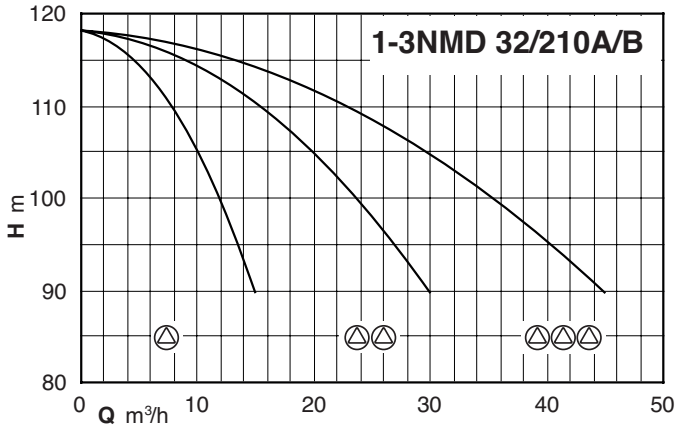


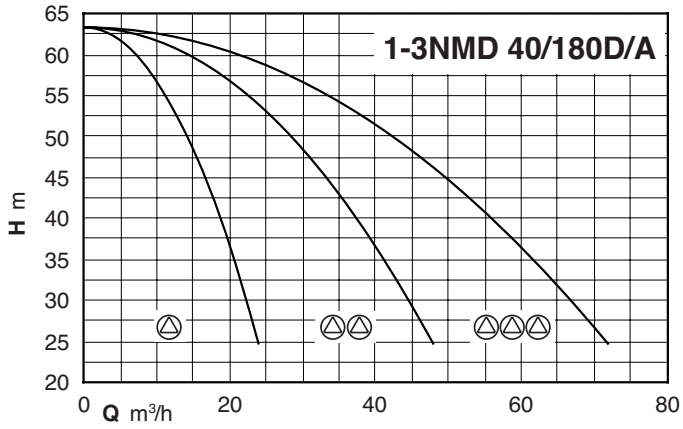


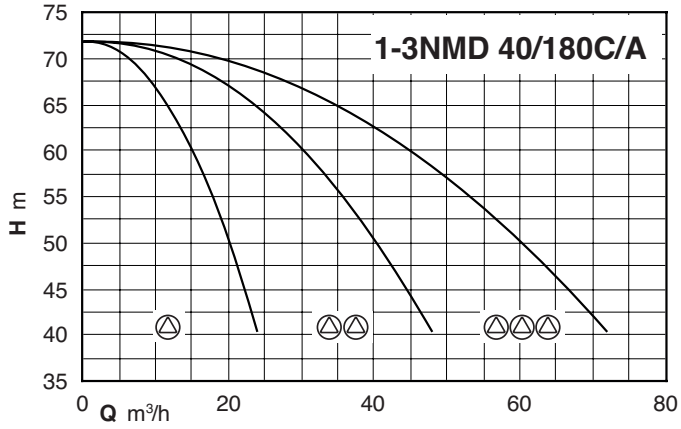


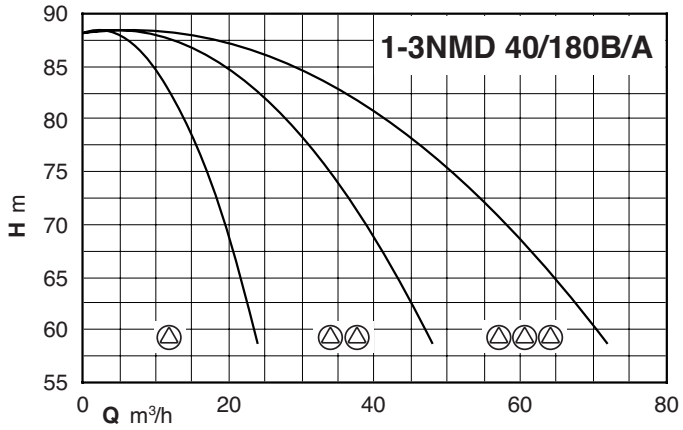


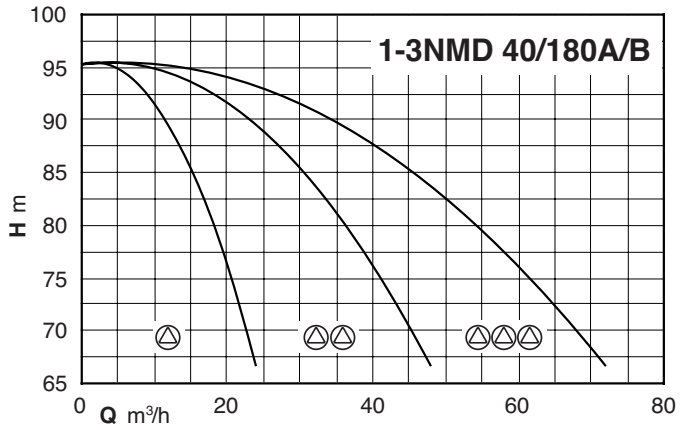

# BS, NM, NMD

## Characteristic curves

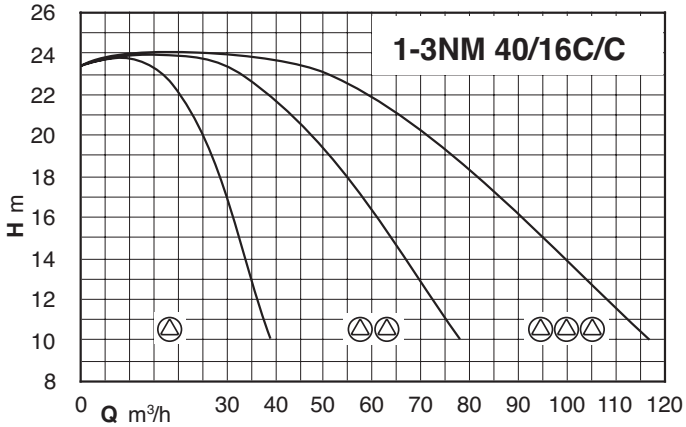


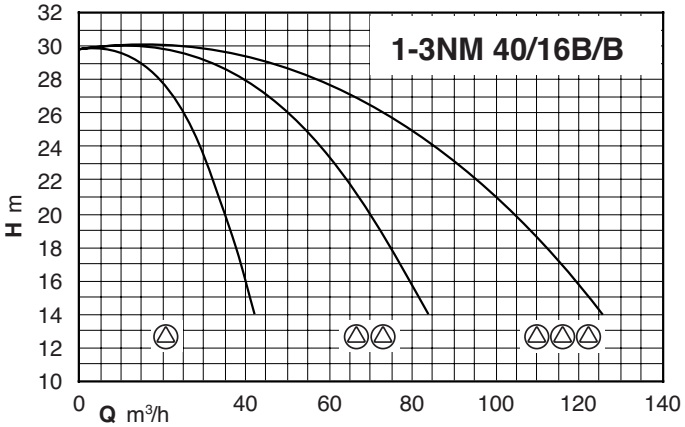


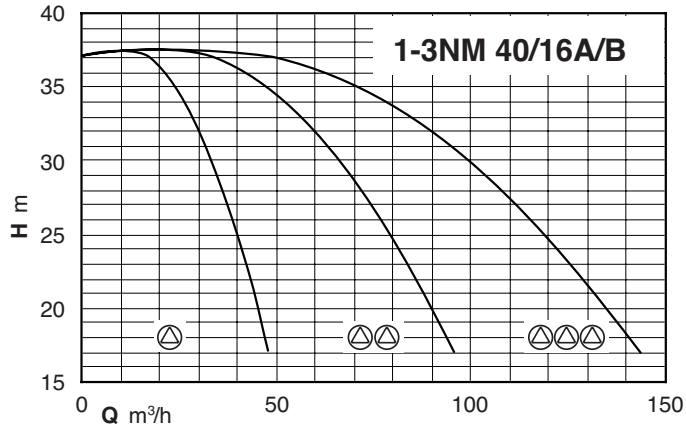


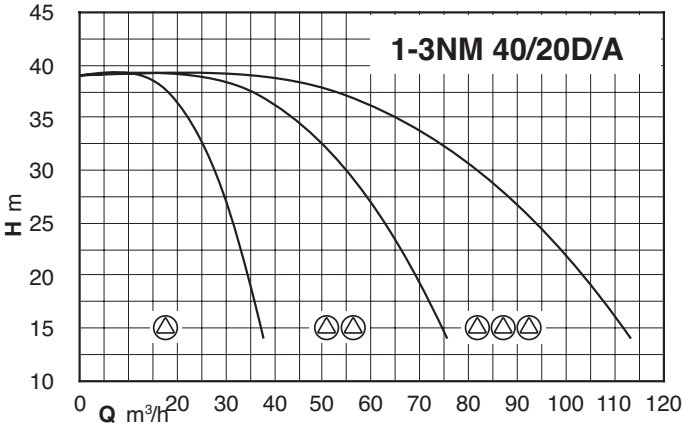


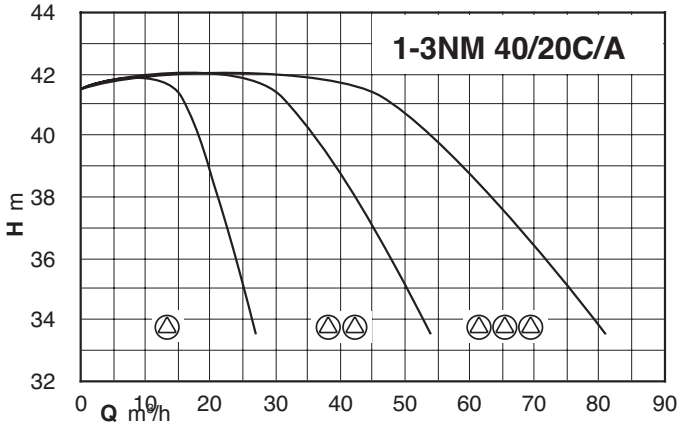


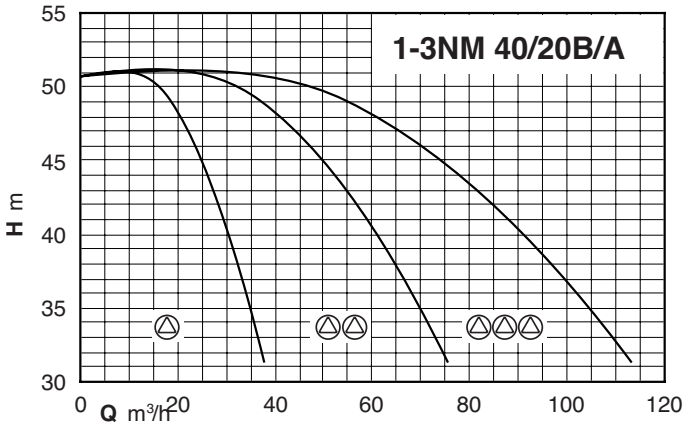


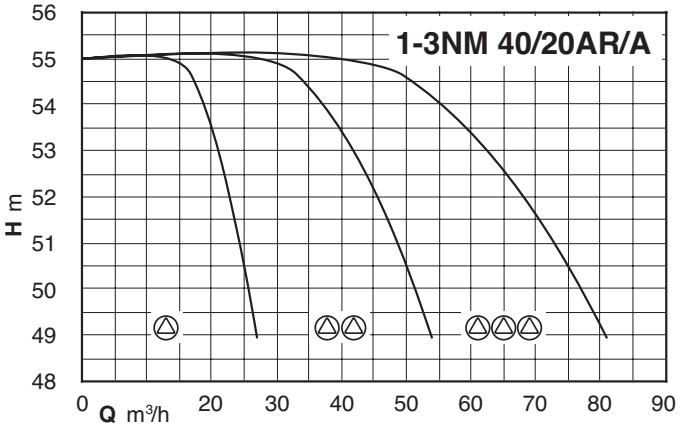


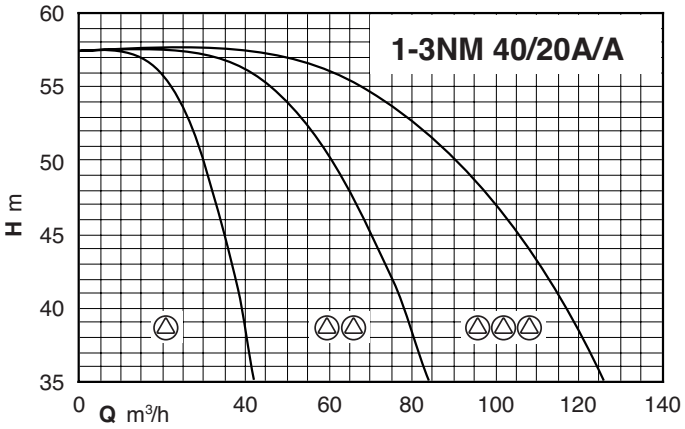

# BS, NM, NMD

## Characteristic curves

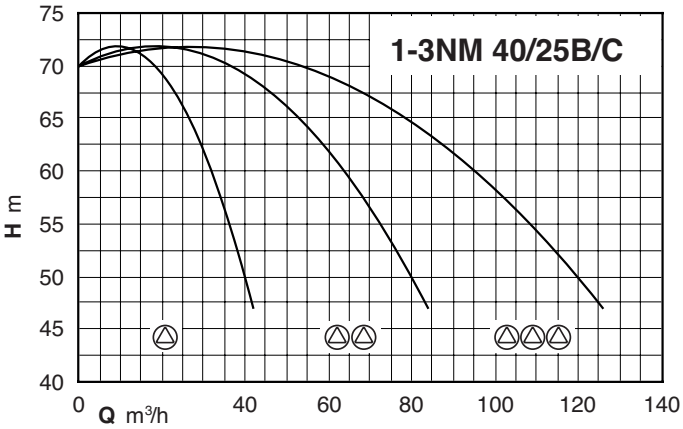


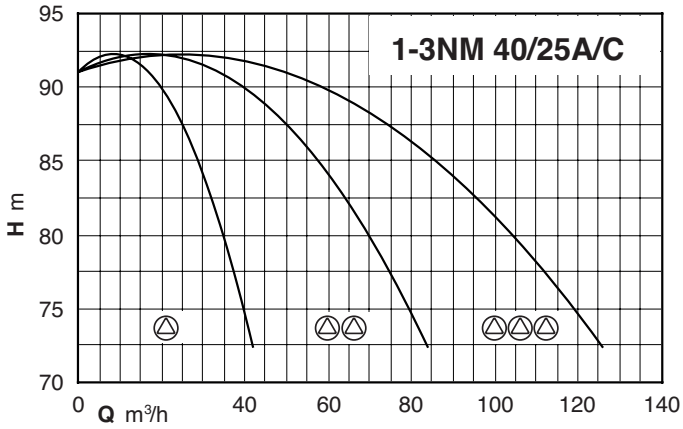


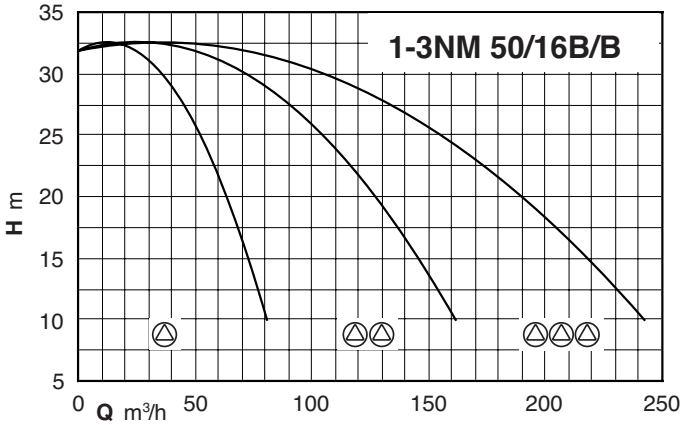


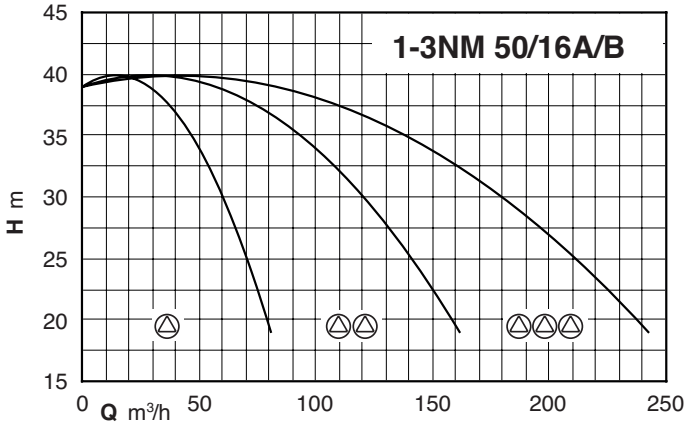


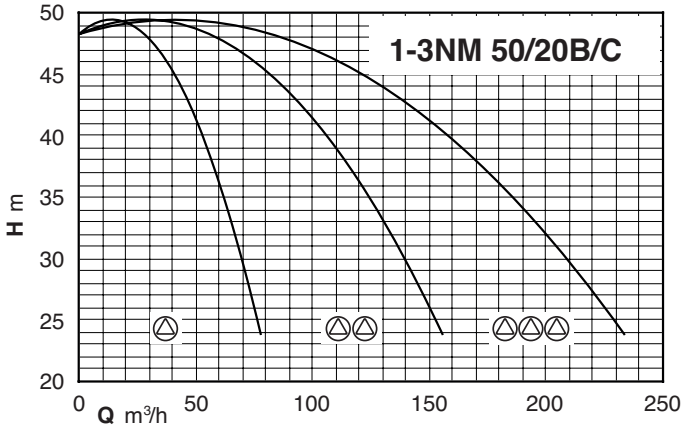


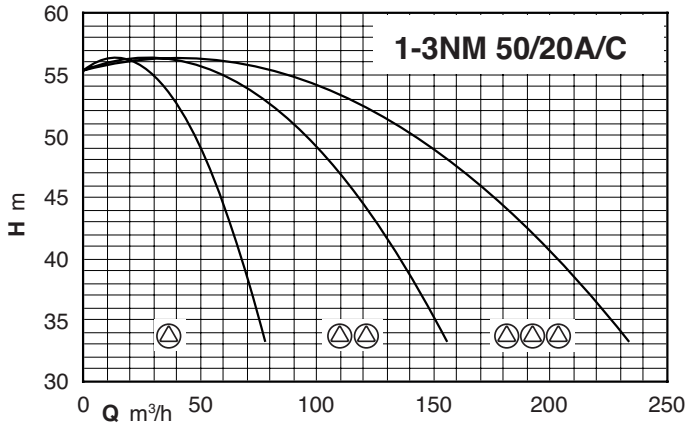


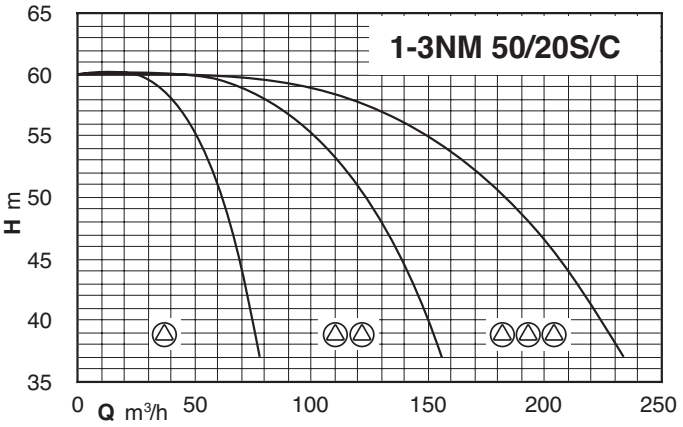

# BS, NM, NMD

## Characteristic curves

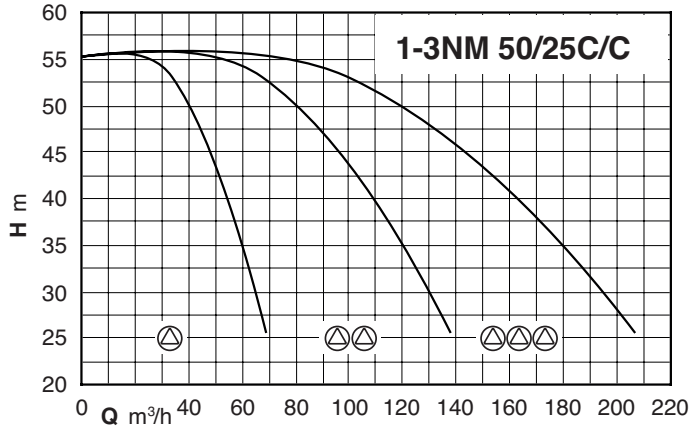


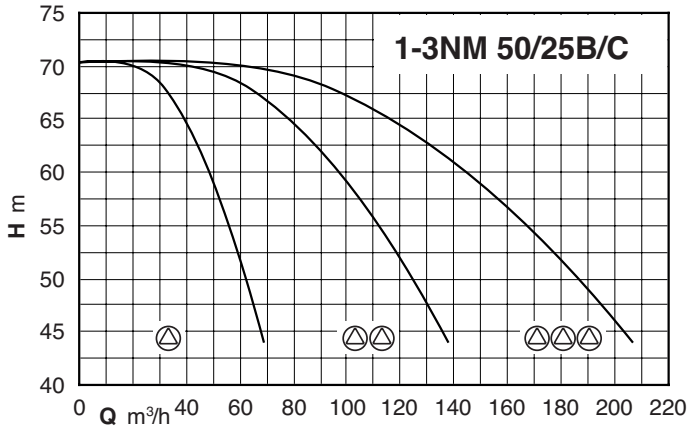


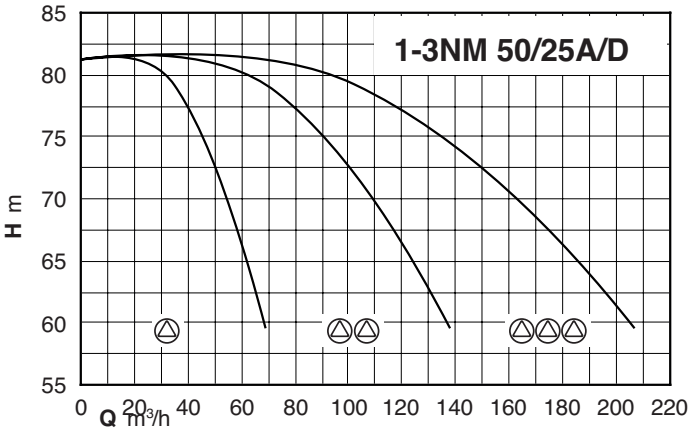


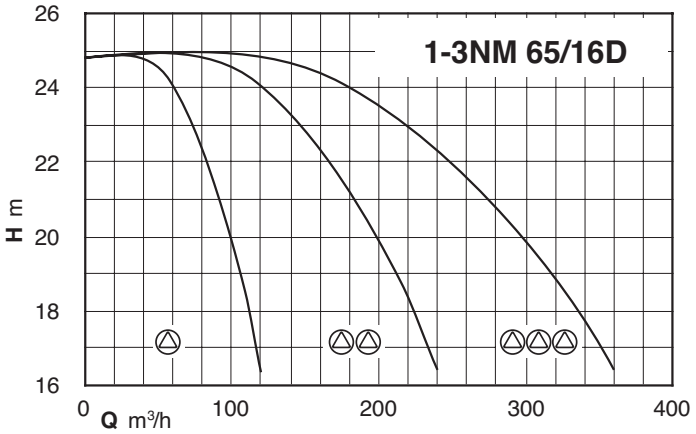


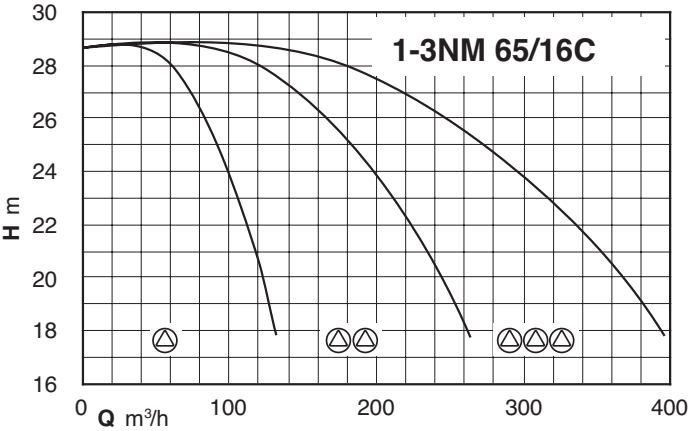


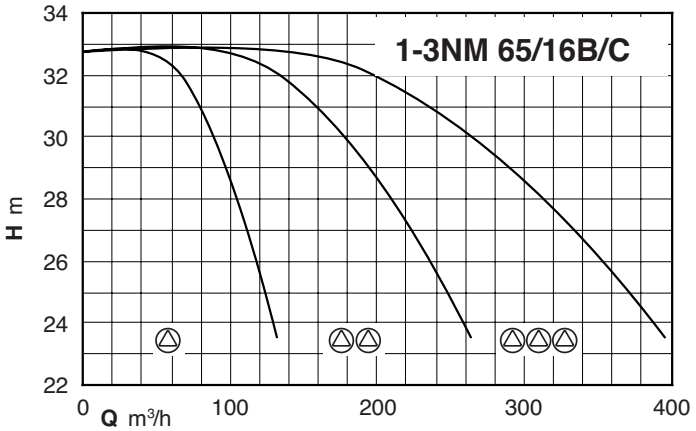


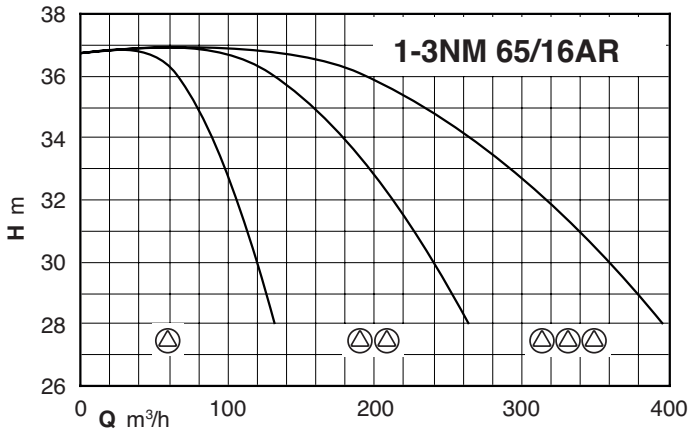


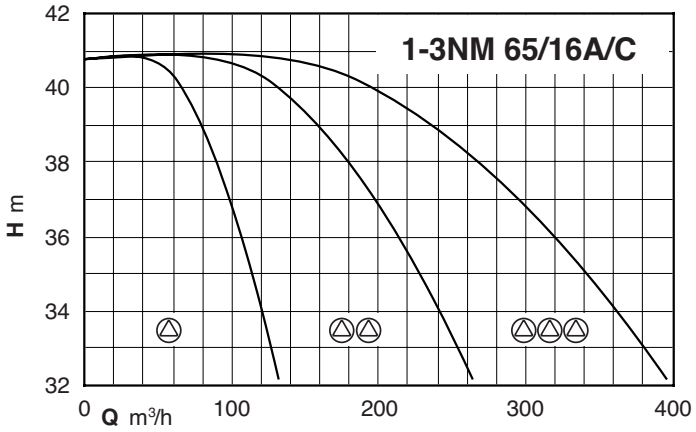

# BS, NM, NMD

## Characteristic curves

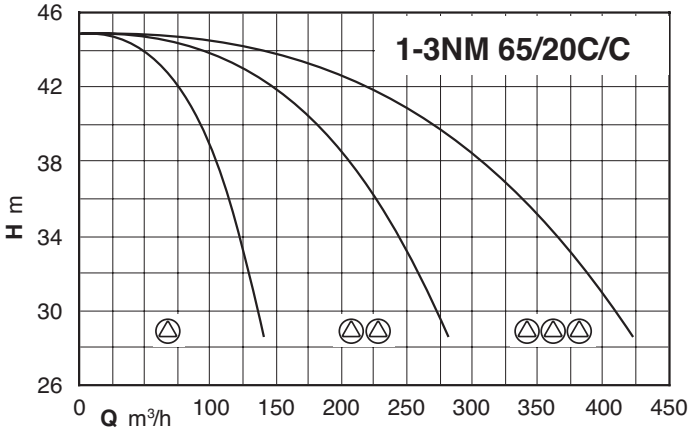


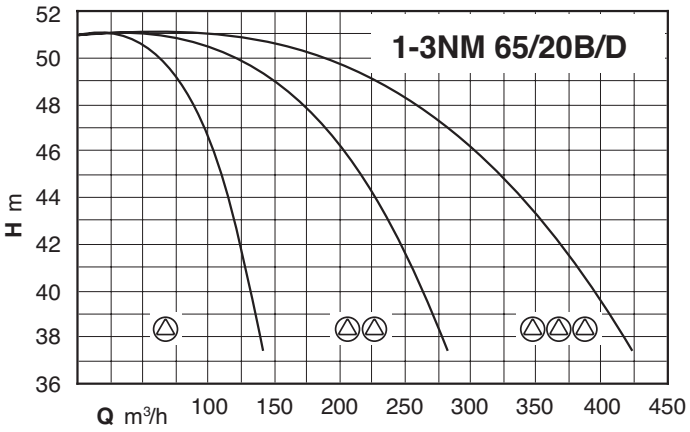


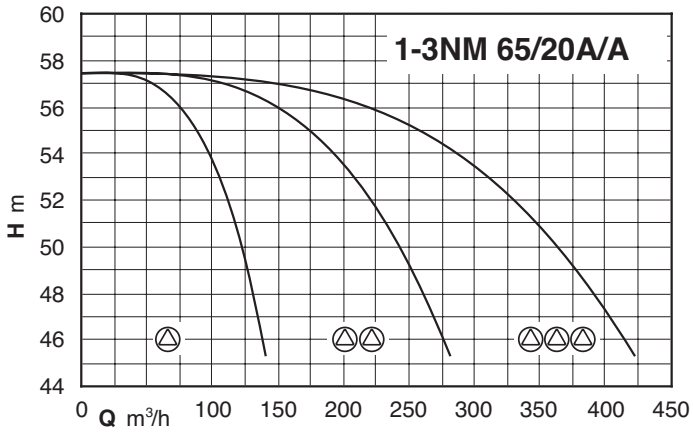


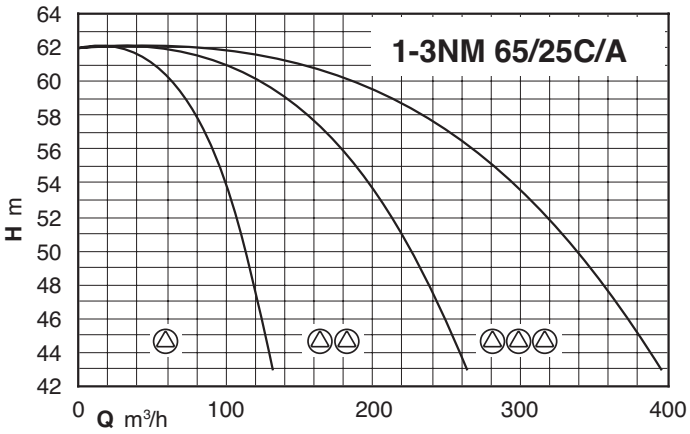


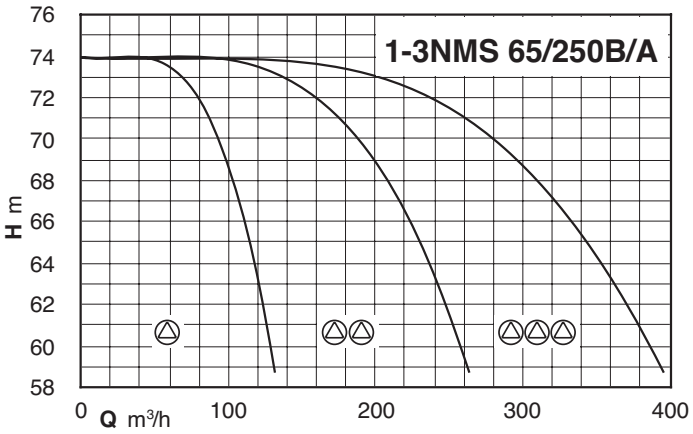


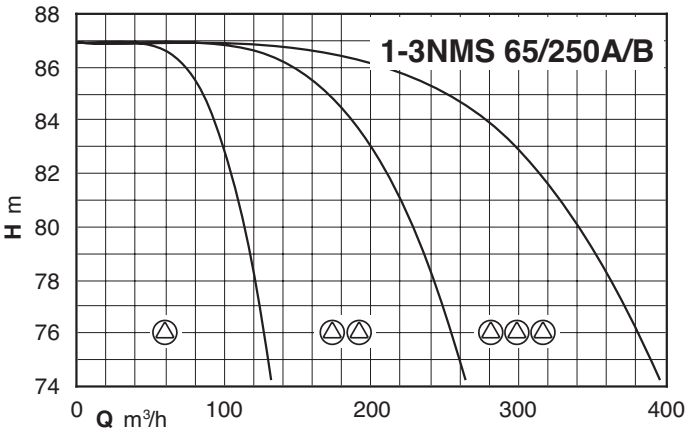

# BS, NM, NMD

## Characteristic curves

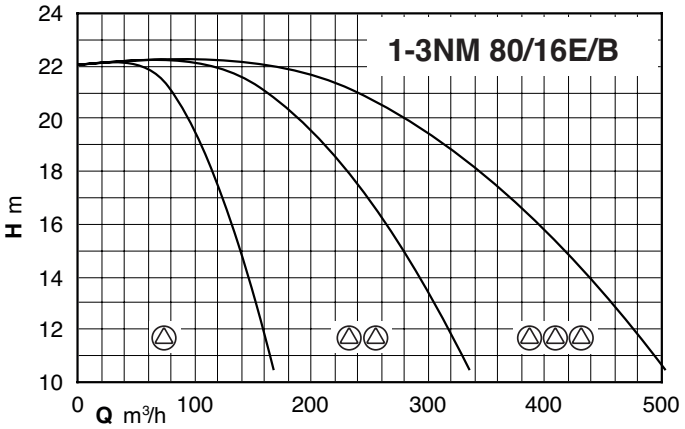


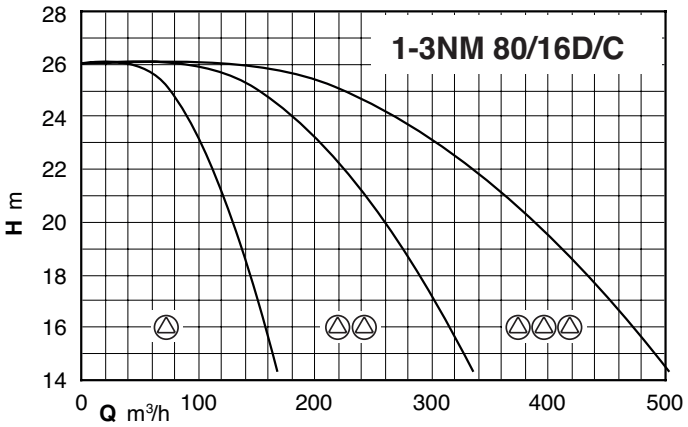


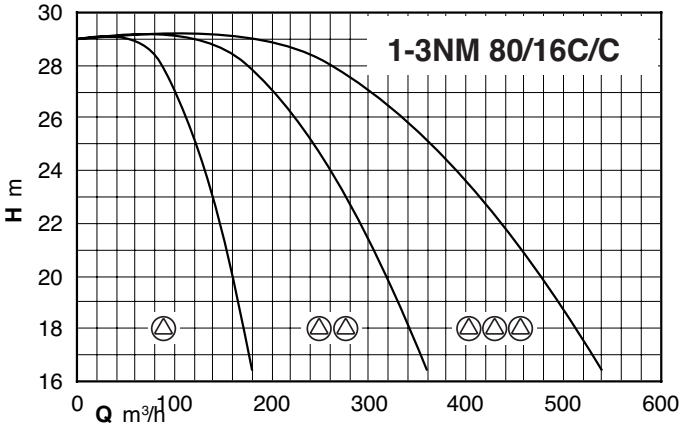


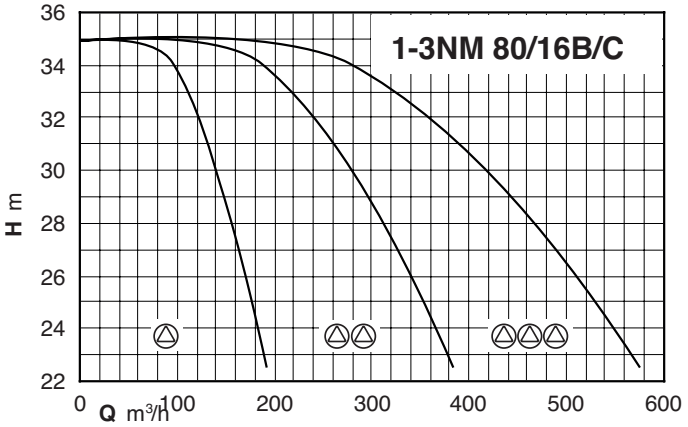


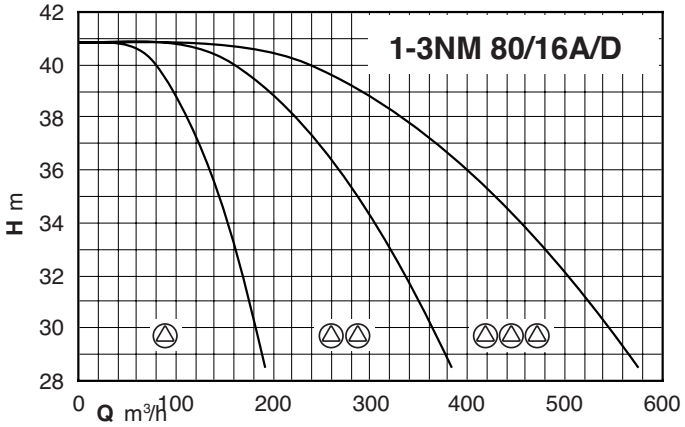


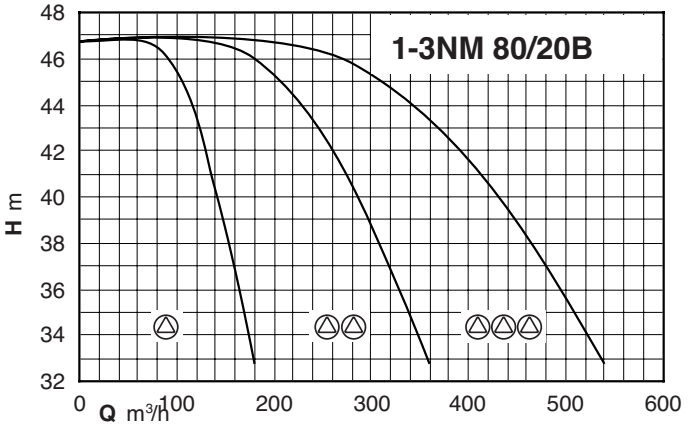


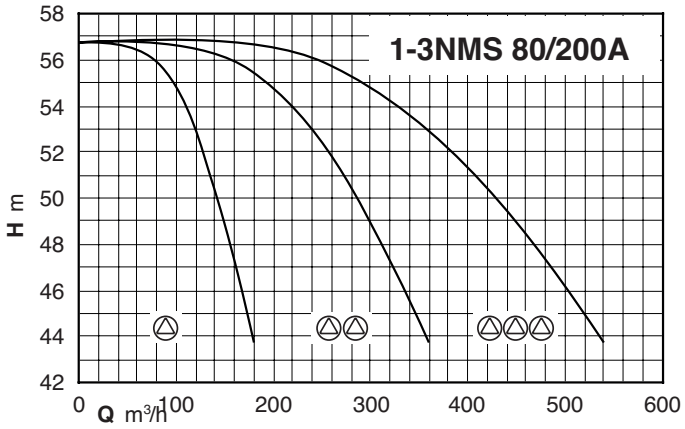


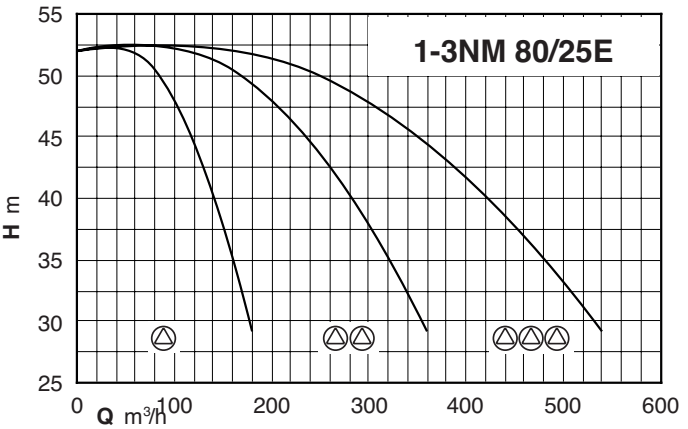

# BS, NM, NMD

## Characteristic curves

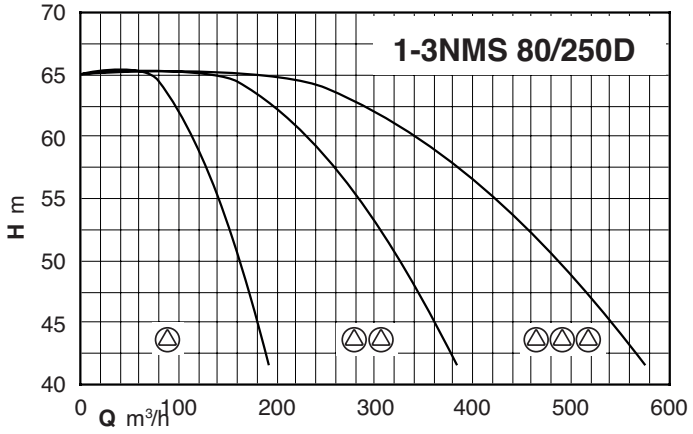


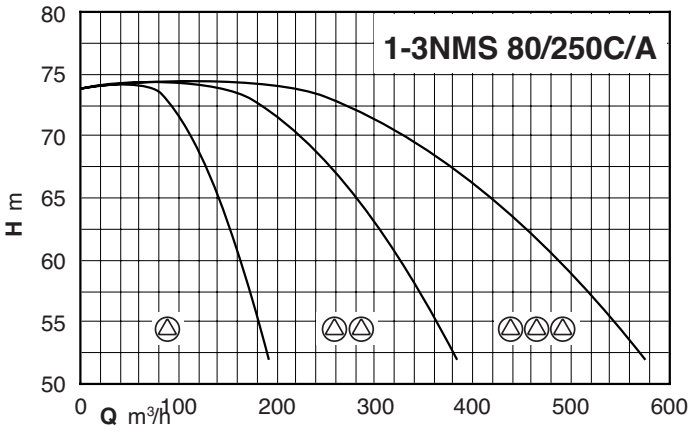


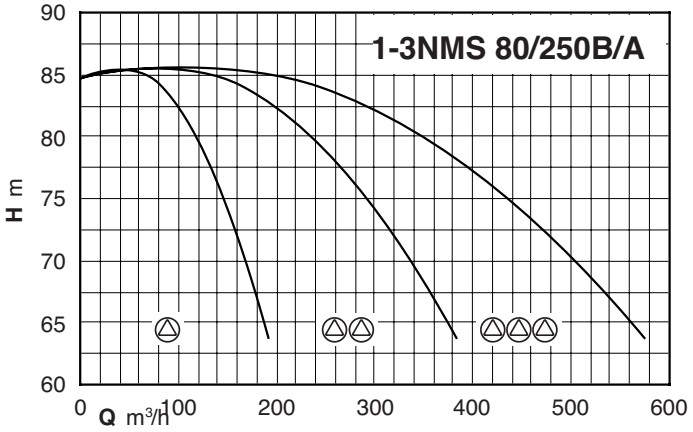


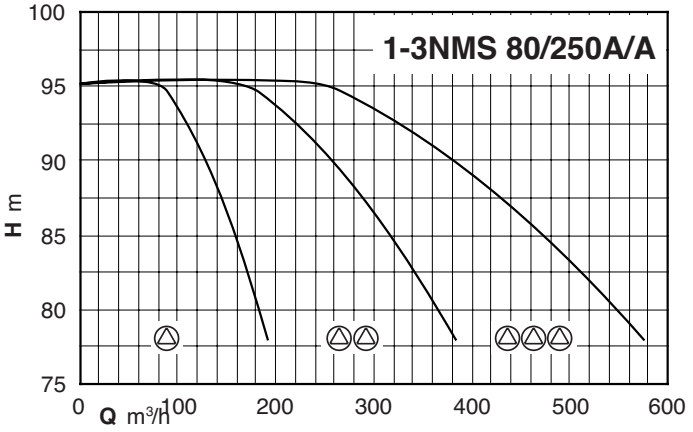


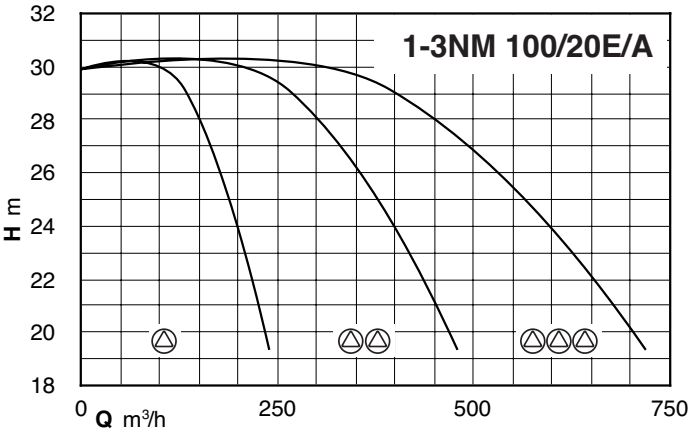


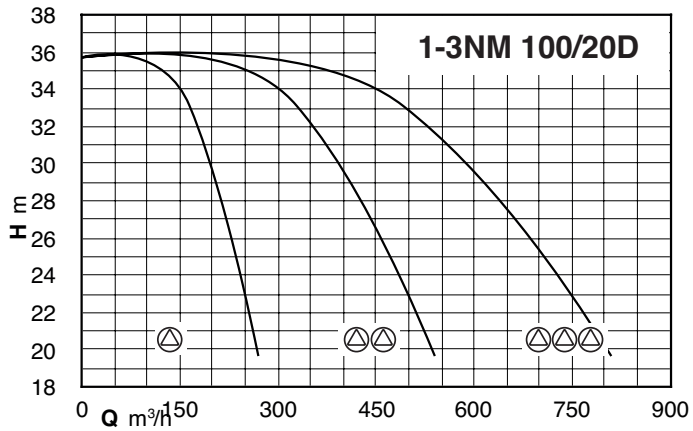

# BS, NM, NMD

calpeda

**Fixed speed pump units**

**BS2F**

| | | Pressure switch | | Tank | |
|---|---|---|---|---|---|
| | | 1 | 2 | membrane | Vessel |
| Model | P2 | Start/Stop | | | |
| | kW | bar | | litri | |
| BS2F 2 NMD 20/110B/A | 0.45 X2 | 2.1 - 2.9 | 1.8 - 2.6 | 24X2 | 100 |
| BS2F 2 NMD 20/110A/B | 0.75 X2 | 3 - 3.9 | 2.7 - 3.6 | 100 | 200 |
| BS2F 2 NMD 20/140B/A | 1.1 X2 | 3.3 - 4.8 | 3 - 4.5 | 80 | 100 |
| BS2F 2 NMD 20/140A/A | 1.5 X2 | 4.3 - 6 | 4.1 - 5.7 | 100 | 200 |
| BS2F 2 NMD 25/190C/B | 2.2 X2 | 3.9 - 5.5 | 3.7 - 5.2 | 200 | 300 |
| BS2F 2 NMD 25/190B/A | 3 X2 | 5 - 6.8 | 4.8 - 6.5 | 300 | 500 |
| BS2F 2 NMD 25/190A/B | 4 X2 | 6.8 - 8.8 | 6.5 - 8.5 | 300 | 500 |
| BS2F 2 NM 32/16B/A | 1.5 X2 | 1.8 - 2.6 | 1.5 - 2.3 | 300 | 800 |
| BS2F 2 NM 32/16A/B | 2.2 X2 | 2.4 - 3.2 | 2.1 - 2.9 | 500 | 800 |
| BS2F 2 NM 32/20C/A | 3 X2 | 3.1 - 4 | 2.8 - 3.7 | 500 | 1000 |
| BS2F 2 NM 32/20A/B | 4 X2 | 3.6 - 5.2 | 3.3 - 4.9 | 200 | 300 |
| BS2F 2 NM 32L/16B | 3 X2 | 1.9 - 2.7 | 1.6 - 2.4 | 200 | 300 |
| BS2F 2 NM 32L/16A | 4 X2 | 2.8 - 3.6 | 2.5 - 3.3 | 200 | 300 |
| BS2F 2 NM 32L/20B | 5,5 X2 | 3.2 - 4.7 | 2.9 - 4.4 | 200 | 300 |
| BS2F 2 NM 32L/20A | 7.5 X2 | 3.7 - 5.4 | 3.5 - 5.1 | 200 | 300 |
| BS2F 2 NMD 32/210D/B | 4 X2 | 4.7 - 6.4 | 4.4 - 6.1 | 500 | 800 |
| BS2F 2 NMD 32/210C/A | 5.5 X2 | 5.7 - 7.6 | 5.5 - 7.3 | 500 | 1000 |
| BS2F 2 NMD 32/210B/A | 7.5 X2 | 7.3 - 9.4 | 7 - 9.1 | 750 | 1000 |
| BS2F 2 NMD 32/210A/B | 9.2 X2 | 8.8 - 10.3 | 8.5 - 10 | 1000 | 2000 |
| BS2F 2 NMD 40/180D/B | 4 X2 | 3.8 - 5.4 | 3.5 - 5.1 | 500 | 1000 |
| BS2F 2 NMD 40/180C/A | 5.5 X2 | 4.5 - 6.2 | 4.3 - 5.9 | 750 | 1500 |
| BS2F 2 NMD 40/180B/A | 7.5 X2 | 5.9 - 7.8 | 5.7 - 7.5 | 1000 | 1500 |
| BS2F 2 NMD 40/180A/B | 9.2 X2 | 6.5 - 8.5 | 6.2 - 8.2 | 1000 | 2000 |
| BS2F 2 NM 40/16B/B | 3 X2 | 1.8 - 2.6 | 1.5 - 2.3 | 750 | 2000 |
| BS2F 2 NM 40/16A/C | 4 X2 | 2.5 - 3.3 | 2.2 - 3 | 1500 | 3000 |
| BS2F 2 NM 40/20B/A | 5.5 X2 | 3 - 4.5 | 2.7 - 4.2 | 1000 | 2000 |
| BS2F 2 NM 40/20A/A | 7.5 X2 | 3.6 - 5.1 | 3.3 - 4.8 | 1500 | 3000 |
| BS2F 2 NM 40/25B/C | 11 X2 | 4.5 - 6.2 | 4.3 - 5.9 | 2000 | 3000 |
| BS2F 2 NM 40/25A/C | 15 X2 | 6.1 - 8.1 | 5.9 - 7.8 | 3000 | 4000 |
| BS2F 2 NM 50/16B/B | 5.5 X2 | 2 - 2.8 | 1.7 - 2.5 | 2000 | 4000 |
| BS2F 2 NM 50/16A/B | 7.5 X2 | 2.6 - 3.4 | 2.3 - 3.1 | 3000 | 6000 |
| BS2F 2 NM 50/20B/C | 9.2 X2 | 3.4 - 4.3 | 3.1 - 4 | - | 6000 |
| BS2F 2 NM 50/20A/C | 11 X2 | 3.3 - 4.9 | 3.1 - 4.6 | 3000 | 5000 |
| BS2F 2 NM 50/25C/C | 11 X2 | 3.4 - 4.9 | 3.1 - 4.6 | 3000 | 5000 |
| BS2F 2 NM 50/25B/C | 15 X2 | 4.5 - 6.2 | 4.2 - 5.9 | - | 6000 |
| BS2F 2 NM 50/25A/D | 18.5 X2 | 5.4 - 7.2 | 5.1 - 6.9 | - | 8000 |
| BS2F 2 NM 65/16B/C | 11 X2 | 2.1 - 2.9 | 1.8 - 2.6 | - | 10000 |
| BS2F 2 NM 65/16AR | 15 X2 | 2.4 - 3.2 | 2.1 - 2.9 | - | - |
| BS2F 2 NM 65/16A/C | 15 X2 | 2.8 - 3.6 | 2.5 - 3.3 | - | - |
| BS2F 2 NM 65/20C/C | 15 X2 | 3 - 3.9 | 2.7 - 3.6 | - | - |
| BS2F 2 NM 65/20B/D | 18.5 X2 | 2.9 - 4.4 | 2.6 - 4.1 | - | - |
| BS2F 2 NM 65/20A/A | 22 X2 | 3.5 - 5 | 3.2 - 4.7 | - | - |
| BS2F 2 NM 65/25C/A | 22 X2 | 4.1 - 5.7 | 3.8 - 5.4 | - | - |
| BS2F 2 NMS 65/250B/A | 30 X2 | 5.3 - 7.1 | 5 - 6.8 | - | 6000 |
| BS2F 2 NMS 65/250A/B | 37 X2 | 6.1 - 8.1 | 5.9 - 7.8 | 2000 | 3000 |
| BS2F 2 NM 80/16B/C | 15 X2 | 2.3 - 3.1 | 2 - 2.8 | - | - |
| BS2F 2 NM 80/16A/D | 18.5 X2 | 2.7 - 3.5 | 2.4 - 3.2 | - | - |
| BS2F 2 NM 80/20B | 22 X2 | 3.2 - 4.1 | 2.9 - 3.8 | - | - |
| BS2F 2 NMS 80/200A | 30 X2 | 3.4 - 5 | 3.1 - 4.7 | - | - |
| BS2F 2 NM 80/25E | 22 X2 | 3 - 4.5 | 2.7 - 4.2 | - | - |
| BS2F 2 NMS 80/250D | 30 X2 | 4.1 - 5.8 | 3.9 - 5.5 | - | - |
| BS2F 2 NMS 80/250C/A | 37 X2 | 4.8 - 6.6 | 4.5 - 6.3 | - | - |
| BS2F 2 NMS 80/250B/A | 45 X2 | 5.7 - 7.6 | 5.4 - 7.3 | - | - |
| BS2F 2 NMS 80/250A/A | 55 X2 | 6.6 - 8.6 | 6.3 - 8.3 | - | - |

Start and stop pressure controlled by pressure switches

**BS3F**

| | | Transducer | Tank | |
|---|---|---|---|---|
| | | 1 | membrane | Vessel |
| Model | P2 | Start/Stop | | |
| | kW | bar | litri | |
| BS3F 3 NM 32L/16B | 3 X3 | 1.9 - 2.7 | 750 | 2000 |
| BS3F 3 NM 32L/16A | 4 X3 | 2.8 - 3.6 | 750 | 2000 |
| BS3F 3 NM 32L/20B | 5.5 X3 | 3.2 - 4.7 | 750 | 2000 |
| BS3F 3 NM 32L/20A | 7.5 X3 | 3.7 - 5.4 | 750 | 2000 |
| BS3F 3 NM 40/16B/B | 3 X3 | 1.8 - 2.6 | 750 | 2000 |
| BS3F 3 NM 40/16A/C | 4 X3 | 2.5 - 3.3 | 1500 | 3000 |
| BS3F 3 NM 40/20B/A | 5.5 X3 | 3 - 4.5 | 1000 | 2000 |
| BS3F 3 NM 40/20A/A | 7.5 X3 | 3.5 - 5.1 | 1500 | 3000 |
| BS3F 3 NM 40/25B/C | 11 X3 | 4.5 - 6.2 | 2000 | 3000 |
| BS3F 3 NM 40/25A/C | 15 X3 | 6.1 - 8.1 | 3000 | 4000 |
| BS3F 3 NM 50/16B/B | 5.5 X3 | 2 - 2.8 | 2000 | 4000 |
| BS3F 3 NM 50/16A/B | 7.5 X3 | 2.6 - 3.4 | 3000 | 6000 |
| BS3F 3 NM 50/20B/C | 9.2 X3 | 3.4 - 4.3 | - | 6000 |
| BS3F 3 NM 50/20A/C | 11 X3 | 3.4 - 4.9 | 3000 | 5000 |
| BS3F 3 NM 50/25C/C | 11 X3 | 3.4 - 4.9 | 3000 | 5000 |
| BS3F 3 NM 50/25B/C | 15 X3 | 4.5 - 6.2 | - | 6000 |
| BS3F 3 NM 50/25A/D | 18.5 X3 | 5.4 - 7.2 | - | 8000 |
| BS3F 3 NM 65/16B/C | 11 X3 | 2.1 - 2.9 | - | 10000 |
| BS3F 3 NM 65/16AR | 15 X3 | 2.4 - 3.2 | - | - |
| BS3F 3 NM 65/16A/C | 15 X3 | 2.8 - 3.6 | - | - |
| BS3F 3 NM 65/20C/C | 15 X3 | 3 - 3.9 | - | - |
| BS3F 3 NM 65/20B/D | 18.5 X3 | 2.9 - 4.4 | - | - |
| BS3F 3 NM 65/20A/A | 22 X3 | 3.5 - 5 | - | - |
| BS3F 3 NM 65/25C/A | 22 X3 | 4 - 5.7 | - | - |
| BS3F 3 NMS 65/250B/A | 30 X3 | 5.3 - 7.1 | - | - |
| BS3F 3 NMS 65/250A/B | 37 X3 | 6.1 - 8.1 | - | - |
| BS3F 3 NM 80/16B/C | 15 X3 | 2.3 - 3.1 | - | - |
| BS3F 3 NM 80/16A/D | 18.5 X3 | 2.7 - 3.5 | - | - |
| BS3F 3 NM 80/20B | 22 X3 | 3.2 - 4.1 | - | - |
| BS3F 3 NMS 80/200A | 30 X3 | 3.4 - 4.9 | - | - |
| BS3F 3 NM 80/25E | 22 X3 | 3 - 4.5 | - | - |
| BS3F 3 NMS 80/250D | 30 X3 | 4.1 - 5.8 | - | - |
| BS3F 3 NMS 80/250C/A | 37 X3 | 4.8 - 6.6 | - | - |
| BS3F 3 NMS 80/250B/A | 45 X3 | 5.7 - 7.6 | - | - |
| BS3F 3 NMS 80/250A/A | 55 X3 | 6.6 - 8.6 | - | - |

Start and stop pressure controlled by a pressure transducer

# BS, NM, NMD

**Variable speed pump units with frequency converter**

**BS2V ..ITT**

| Model | P2 |
|---|---|
| | kW |
| BS2V 2 NM 32/16B/A-ITT | 1.5 X2 |
| BS2V 2 NM 32/16A/B-ITT | 2.2 X2 |
| BS2V 2 NM 32/20D/B-ITT | 2.2 X2 |
| BS2V 2 NM 32/20C/A-ITT | 3 X2 |
| BS2V 2 NM 32/20A/B-ITT | 4 X2 |
| BS2V 2 NM 32L/16B-ITT | 3 X2 |
| BS2V 2 NM 32L/16A-ITT | 4 X2 |
| BS2V 2 NM 32L/20B-ITT | 5.5 X2 |
| BS2V 2 NM 32L/20A-ITT | 7.5 X2 |
| BS2V 2 NM 40/16C/C-ITT | 2.2 X2 |
| BS2V 2 NM 40/16B/B-ITT | 3 X2 |
| BS2V 2 NM 40/16A/C-ITT | 4 X2 |
| BS2V 2 NM 40/20D/B-ITT | 4 X2 |
| BS2V 2 NM 40/20C/B-ITT | 4 X2 |
| BS2V 2 NM 40/20B/A-ITT | 5.5 X2 |
| BS2V 2 NM 40/20AR/A-ITT | 5.5 X2 |
| BS2V 2 NM 40/20A/A-ITT | 7.5 X2 |
| BS2V 2 NM 40/25C/C-ITT | 9.2 X2 |
| BS2V 2 NM 40/25B/C-ITT | 11 X2 |
| BS2V 2 NM 40/25A/C-ITT | 15 X2 |
| BS2V 2 NM 50/16B/B-ITT | 5.5 X2 |
| BS2V 2 NM 50/16A/B-ITT | 7.5 X2 |
| BS2V 2 NM 50/20B/C-ITT | 9.2 X2 |
| BS2V 2 NM 50/20A/C-ITT | 11 X2 |
| BS2V 2 NM 50/20S/C-ITT | 15 X2 |
| BS2V 2 NM 50/25C/C-ITT | 11 X2 |
| BS2V 2 NM 50/25B/C-ITT | 15 X2 |
| BS2V 2 NM 50/25A/D-ITT | 18.5 X2 |
| BS2V 2 NM 65/16D/B-ITT | 7.5 X2 |
| BS2V 2 NM 65/16C/C-ITT | 9.2 X2 |
| BS2V 2 NM 65/16B/C-ITT | 11 X2 |
| BS2V 2 NM 65/16AR-ITT | 15 X2 |
| BS2V 2 NM 65/16A/C-ITT | 15 X2 |
| BS2V 2 NM 65/20C/C-ITT | 15 X2 |
| BS2V 2 NM 65/20B/D-ITT | 18.5 X2 |
| BS2V 2 NM 65/20A/A-ITT | 22 X2 |
| BS2V 2 NM 65/25C/A-ITT | 22 X2 |
| BS2V 2 NM 80/16E/B-ITT | 7.5 X2 |
| BS2V 2 NM 80/16D/C-ITT | 9.2 X2 |
| BS2V 2 NM 80/16C/C-ITT | 11 X2 |
| BS2V 2 NM 80/16B/C-ITT | 15 X2 |
| BS2V 2 NM 80/16A/D-ITT | 18.5 X2 |
| BS2V 2 NM 80/20B-ITT | 22 X2 |
| BS2V 2 NM 80/25E-ITT | 22 X2 |
| BS2V 2 NM 100/20E/A-ITT | 18.5 X2 |
| BS2V 2 NM 100/20D-ITT | 22 X2 |

**BS3V ..ITT**

| Model | P2 |
|---|---|
| | kW |
| BS3V 3 NM 32/16B/A-ITT | 1.5 X3 |
| BS3V 3 NM 32/16A/B-ITT | 2.2 X3 |
| BS3V 3 NM 32/20D/B-ITT | 2.2 X3 |
| BS3V 3 NM 32/20C/A-ITT | 3 X3 |
| BS3V 3 NM 32/20A/B-ITT | 4 X3 |
| BS3V 3 NM 32L/16B-ITT | 3 X3 |
| BS3V 3 NM 32L/16A-ITT | 4 X3 |
| BS3V 3 NM 32L/20B-ITT | 5.5 X3 |
| BS3V 3 NM 32L/20A-ITT | 7.5 X3 |
| BS3V 3 NM 40/16C/C-ITT | 2.2 X3 |
| BS3V 3 NM 40/16B/B-ITT | 3 X3 |
| BS3V 3 NM 40/16A/C-ITT | 4 X3 |
| BS3V 3 NM 40/20D/B-ITT | 4 X3 |
| BS3V 3 NM 40/20C/B-ITT | 4 X3 |
| BS3V 3 NM 40/20B/A-ITT | 5.5 X3 |
| BS3V 3 NM 40/20AR/A-ITT | 5.5 X3 |
| BS3V 3 NM 40/20A/A-ITT | 7.5 X3 |
| BS3V 3 NM 40/25C/C-ITT | 9.2 X3 |
| BS3V 3 NM 40/25B/C-ITT | 11 X3 |
| BS3V 3 NM 40/25A/C-ITT | 15 X3 |
| BS3V 3 NM 50/16B/B-ITT | 5.5 X3 |
| BS3V 3 NM 50/16A/B-ITT | 7.5 X3 |
| BS3V 3 NM 50/20B/C-ITT | 9.2 X3 |
| BS3V 3 NM 50/20A/C-ITT | 11 X3 |
| BS3V 3 NM 50/20S/C-ITT | 15 X3 |
| BS3V 3 NM 50/25C/C-ITT | 11 X3 |
| BS3V 3 NM 50/25B/C-ITT | 15 X3 |
| BS3V 3 NM 50/25A/D-ITT | 18.5 X3 |
| BS3V 3 NM 65/16D/B-ITT | 7.5 X3 |
| BS3V 3 NM 65/16C/C-ITT | 9.2 X3 |
| BS3V 3 NM 65/16B/C-ITT | 11 X3 |
| BS3V 3 NM 65/16AR-ITT | 15 X3 |
| BS3V 3 NM 65/16A/C-ITT | 15 X3 |
| BS3V 3 NM 65/20C/C-ITT | 15 X3 |
| BS3V 3 NM 65/20B/D-ITT | 18.5 X3 |
| BS3V 3 NM 65/20A/A-ITT | 22 X3 |
| BS3V 3 NM 65/25C/A-ITT | 22 X3 |
| BS3V 3 NM 80/16E/B-ITT | 7.5 X3 |
| BS3V 3 NM 80/16D/C-ITT | 9.2 X3 |
| BS3V 3 NM 80/16C/C-ITT | 11 X3 |
| BS3V 3 NM 80/16B/C-ITT | 15 X3 |
| BS3V 3 NM 80/16A/D-ITT | 18.5 X3 |
| BS3V 3 NM 80/20B-ITT | 22 X3 |
| BS3V 3 NM 80/25E-ITT | 22 X3 |
| BS3V 3 NM 100/20E/A-ITT | 18.5 X3 |
| BS3V 3 NM 100/20D-ITT | 22 X3 |

# BS, NM, NMD

## Dimensions and weights

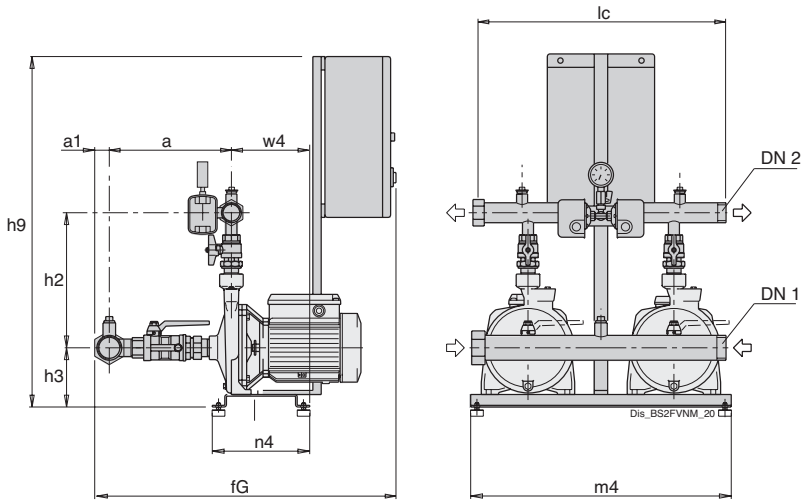


| TYPE | Manifolds | | mm | | | | | | | | | | Kg |
|---|---|---|---|---|---|---|---|---|---|---|---|---|---|
| | DN1 | DN2 | a | a1 | fG | h2 | h3 | h9 | lc | m4 | n4 | w4 | Weight |
| **BS2F 2 NMD 20/110B/A** | G 2 | G 1 1/2 | 315 | 32 | 670 | 277 | 129 | 840 | 600 | 625 | 240 | 280 | 45.8 |
| **BS2F 2 NMD 20/110A/B** | G 2 | G 1 1/2 | 315 | 32 | 670 | 277 | 129 | 840 | 600 | 625 | 240 | 280 | 52.6 |
| **BS2F 2 NMD 20/140B/A** | G 2 | G 1 1/2 | 320 | 32 | 670 | 295 | 146 | 840 | 600 | 625 | 240 | 280 | 70 |
| **BS2F 2 NMD 20/140A/A** | G 2 | G 1 1/2 | 320 | 32 | 670 | 295 | 146 | 840 | 600 | 625 | 240 | 280 | 74.6 |
| **BS2F 2 NMD 25/190C/B** | G 2 1/2 | G 2 | 407 | 40 | 760 | 330 | 175 | 840 | 600 | 625 | 365 | 280 | 109 |
| **BS2F 2 NMD 25/190B/A** | G 2 1/2 | G 2 | 407 | 40 | 760 | 330 | 175 | 840 | 600 | 625 | 365 | 280 | 120.8 |
| **BS2F 2 NMD 25/190A/B** | G 2 1/2 | G 2 | 407 | 40 | 760 | 330 | 175 | 840 | 600 | 625 | 365 | 280 | 127 |
| **BS2F 2 NMD 32/210D/B** | G 3 | G 2 1/2 | 389 | 48 | 460 | 380 | 245 | 890 | 700 | 800 | 550 | 493 | 180.5 |
| **BS2F 2 NMD 32/210C/A** | G 3 | G 2 1/2 | 389 | 48 | 460 | 380 | 272 | 890 | 700 | 800 | 550 | 493 | 181 |
| **BS2F 2 NMD 32/210B/A** | G 3 | G 2 1/2 | 389 | 48 | 460 | 380 | 272 | 1370 | 700 | 800 | 550 | 493 | - |
| **BS2F 2 NMD 32/210A/B** | G 3 | G 2 1/2 | 389 | 48 | 460 | 380 | 307 | 1370 | 700 | 800 | 550 | 493 | 267 |
| **BS2F 2 NMD 40/180D/B** | G 3 | G 2 1/2 | 477 | 48 | 475 | 460 | 245 | 890 | 700 | 800 | 550 | 519 | 185.3 |
| **BS2F 2 NMD 40/180C/A** | G 3 | G 2 1/2 | 477 | 48 | 475 | 460 | 272 | 890 | 700 | 800 | 550 | 519 | 182 |
| **BS2F 2 NMD 40/180B/A** | G 3 | G 2 1/2 | 477 | 48 | 475 | 460 | 272 | 1370 | 700 | 800 | 550 | 519 | 243 |
| **BS2F 2 NMD 40/180A/B** | G 3 | G 2 1/2 | 477 | 48 | 475 | 460 | 307 | 1370 | 700 | 800 | 550 | 519 | 266 |

Non-binding dimensions to be checked when ordering
Anti-vibration kit supplied disassembled as standard

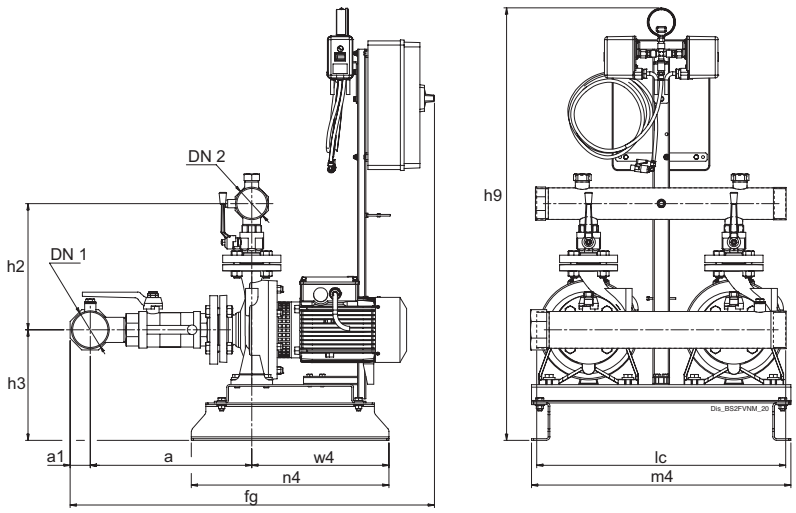


| TYPE | Manifolds | | mm | | | | | | | | | | Kg |
|---|---|---|---|---|---|---|---|---|---|---|---|---|---|
| | DN1 | DN2 | a | a1 | fG | h1 | h3 | h9 | lc | m4 | n4 | w4 | Weight |
| **BS2F 2 NM 32/16B/A** | G 3 | G 2 1/2 | 304 | 48 | 878 | 266 | 345 | 830 | 600 | 625 | 476 | 389 | 114.6 |
| **BS2F 2 NM 32/16A/B** | G 3 | G 2 1/2 | 304 | 48 | 878 | 266 | 345 | 830 | 600 | 625 | 476 | 389 | 117 |
| **BS2F 2 NM 32/20C/A** | G 3 | G 2 1/2 | 324 | 48 | 878 | 294 | 365 | 830 | 600 | 625 | 476 | 389 | 143 |
| **BS2F 2 NM 32/20A/B** | G 3 | G 2 1/2 | 324 | 48 | 878 | 294 | 365 | 830 | 600 | 625 | 476 | 389 | 144.1 |

Non-binding dimensions to be checked when ordering

# BS, NM, NMD

## Dimensions and weights

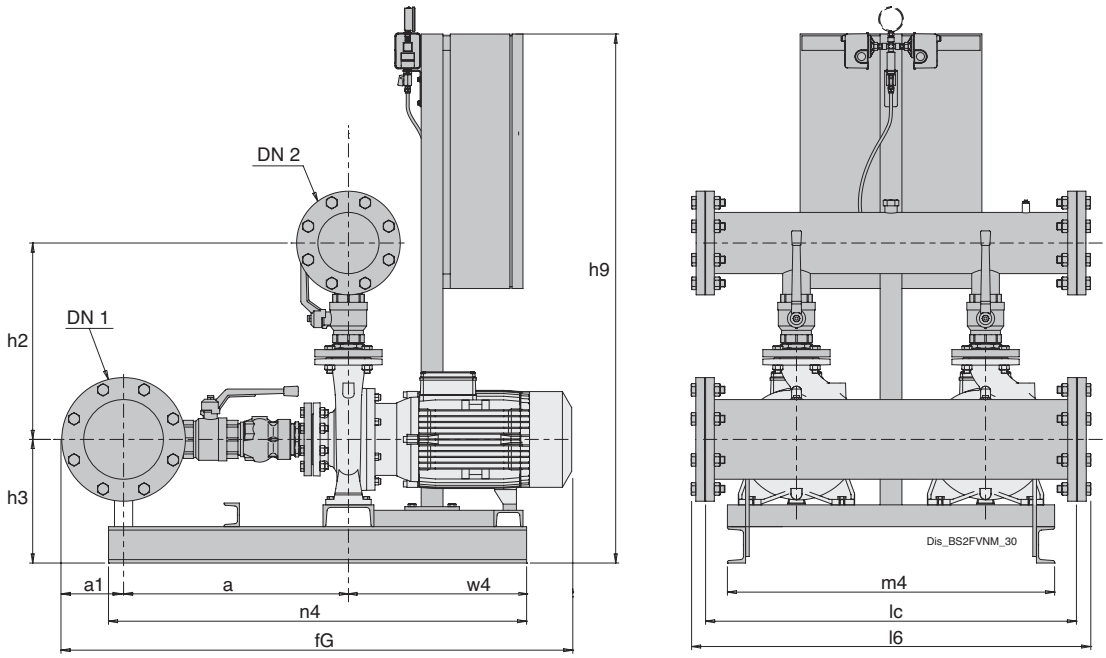


| TYPE | Manifolds | | mm | | | | | | | | | | | Kg |
|---|---|---|---|---|---|---|---|---|---|---|---|---|---|---|
| | DN1 | DN2 | a | a1 | fG | h2 | h3 | h9 | l6 | lc | m4 | n4 | w4 | Weight |
| BS2F 2 NM 32L/16B | 100 | 80 | 487 | 110 | 1008 | 383 | 281 | 830 | 886 | 820 | 800 | 476 | 352 | 144.1 |
| BS2F 2 NM 32L/16A | 100 | 80 | 487 | 110 | 1008 | 383 | 281 | 830 | 886 | 820 | 800 | 476 | 352 | 144.1 |
| BS2F 2 NM 32L/20B | 100 | 80 | 507 | 110 | 1008 | 383 | 281 | 830 | 886 | 820 | 900 | 1040 | 325 | - |
| BS2F 2 NM 32L/20A | 100 | 80 | 207 | 110 | 1008 | 383 | 281 | 1310 | 886 | 820 | 900 | 1040 | 352 | 144.1 |
| BS2F 2 NM 40/16B/B | 100 | 80 | 487 | 110 | 1008 | 383 | 281 | 830 | 886 | 820 | 800 | 476 | 325 | 190 |
| BS2F 2 NM 40/16A/C | 100 | 80 | 487 | 110 | 1008 | 383 | 281 | 830 | 886 | 820 | 800 | 476 | 325 | 195 |
| BS2F 2 NM 40/20B/A | 100 | 80 | 507 | 110 | 1245 | 403 | 320 | 830 | 886 | 820 | 900 | 1040 | 627.5 | 271.5 |
| BS2F 2 NM 40/20A/A | 100 | 80 | 507 | 110 | 1245 | 403 | 320 | 1310 | 886 | 820 | 900 | 1040 | 627.5 | 311 |
| BS2F 2 NM 40/25B/C | 100 | 80 | 507 | 110 | 1245 | 448 | 340 | 1455 | 886 | 820 | 900 | 1040 | 627.5 | 428 |
| BS2F 2 NM 40/25A/C | 100 | 80 | 507 | 110 | 1245 | 448 | 340 | 1455 | 886 | 820 | 900 | 1040 | 627.5 | - |
| BS2F 2 NM 50/16B/B | 125 | 100 | 515 | 125 | 1568 | 517 | 320 | 975 | 988 | 920 | 900 | 1500 | 628 | 391.6 |
| BS2F 2 NM 50/16A/B | 125 | 100 | 515 | 125 | 1568 | 517 | 320 | 1455 | 988 | 920 | 900 | 1500 | 628 | 439 |
| BS2F 2 NM 50/20B/C | 125 | 100 | 515 | 125 | 1568 | 537 | 320 | 1455 | 988 | 920 | 900 | 1500 | 628 | 491 |
| BS2F 2 NM 50/20A/C | 125 | 100 | 515 | 125 | 1568 | 537 | 320 | 1455 | 988 | 920 | 900 | 1500 | 628 | 532 |
| BS2F 2 NM 50/25C/C | 125 | 100 | 515 | 125 | 1754 | 562 | 340 | 1455 | 988 | 920 | 900 | 1500 | 628 | - |
| BS2F 2 NM 50/25B/C | 125 | 100 | 515 | 125 | 1754 | 562 | 340 | 1455 | 988 | 920 | 900 | 1500 | 628 | 581.5 |
| BS2F 2 NM 50/25A/D | 125 | 100 | 515 | 125 | 1754 | 562 | 340 | 1455 | 988 | 920 | 900 | 1500 | 628 | - |
| BS2F 2 NM 65/16B/C | 200 | 150 | 625 | 170 | 1800 | 571 | 320 | 1455 | 1100 | 1020 | 900 | 1500 | 628 | - |
| BS2F 2 NM 65/16AR | 200 | 150 | 625 | 170 | 1800 | 571 | 320 | 1455 | 1100 | 1020 | 900 | 1500 | 628 | 107.5 |
| BS2F 2 NM 65/16A/C | 200 | 150 | 625 | 170 | 1800 | 571 | 320 | 1455 | 1100 | 1020 | 900 | 1500 | 628 | - |
| BS2F 2 NM 65/20C/C | 200 | 150 | 625 | 170 | 1800 | 596 | 340 | 1455 | 1277 | 1200 | 1080 | 1500 | 628 | - |
| BS2F 2 NM 65/20B/D | 200 | 150 | 625 | 170 | 1800 | 596 | 340 | 1455 | 1277 | 1200 | 1080 | 1500 | 628 | - |
| BS2F 2 NM 65/20A/A | 200 | 150 | 625 | 170 | 1800 | 596 | 340 | 1455 | 1277 | 1200 | 1080 | 1500 | 628 | 765 |
| BS2F 2 NM 65/25C/A | 200 | 150 | 625 | 170 | 1800 | 596 | 340 | 1455 | 1277 | 1200 | 1080 | 1500 | 628 | 107.5 |
| BS2F 2 NMS 65/250B/A | 200 | 150 | 625 | 170 | 1882 | 621 | 430 | 1655 | 1277 | 1200 | 1200 | 1750 | 845 | - |
| BS2F 2 NMS 65/250A/B | 200 | 150 | 625 | 170 | 1882 | 621 | 430 | 1855 | 1277 | 1200 | 1200 | 1750 | 845 | 107.5 |
| BS2F 2 NM 80/16B/C | 250 | 200 | 730 | 202.5 | 1852 | 653 | 340 | 1455 | 1283 | 1200 | 1080 | 1650 | 628 | - |
| BS2F 2 NM 80/16A/D | 250 | 200 | 730 | 202.5 | 1852 | 653 | 340 | 1455 | 1283 | 1200 | 1080 | 1650 | 628 | - |
| BS2F 2 NM 80/20B | 250 | 200 | 730 | 202.5 | 1852 | 653 | 340 | 1455 | 1283 | 1200 | 1080 | 1650 | 628 | 107.5 |
| BS2F 2 NMS 80/200A | 250 | 200 | 730 | 202.5 | - | - | - | 1655 | - | 1200 | - | - | - | 107.5 |
| BS2F 2 NM 80/25E | 250 | 200 | 730 | 202.5 | - | - | - | 1655 | - | 1200 | - | - | - | 107.5 |
| BS2F 2 NMS 80/250D | 250 | 200 | 730 | 202.5 | - | - | - | 1655 | - | 1200 | - | - | - | - |
| BS2F 2 NMS 80/250C/A | 250 | 200 | 730 | 202.5 | - | - | - | 1855 | - | 1200 | - | - | - | - |
| BS2F 2 NMS 80/250B/A | 250 | 200 | 730 | 202.5 | - | 708 | 480 | 1400 | 1283 | 1200 | 1200 | 2050 | 943 | 107.5 |
| BS2F 2 NMS 80/250A/A | 250 | 200 | 730 | 202.5 | - | - | - | 1400 | - | 1200 | - | - | - | 107.5 |

Non-binding dimensions to be checked when ordering
Missing dimensions on request

# BS, NM, NMD

## Dimensions and weights

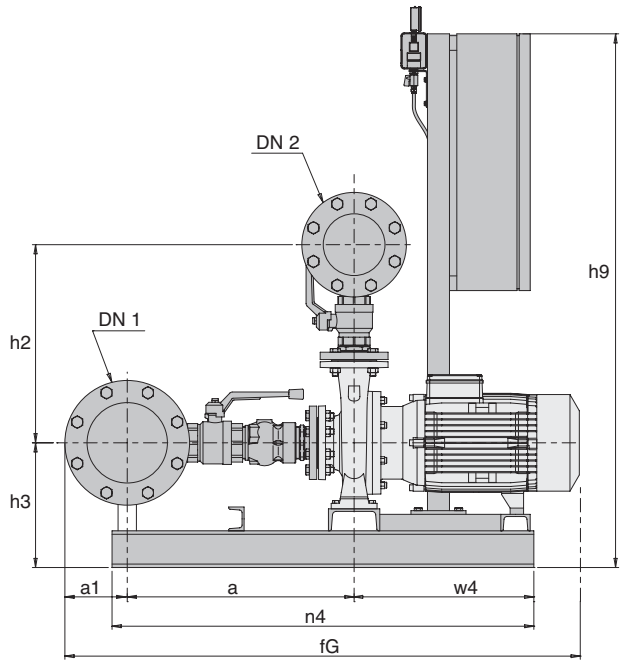


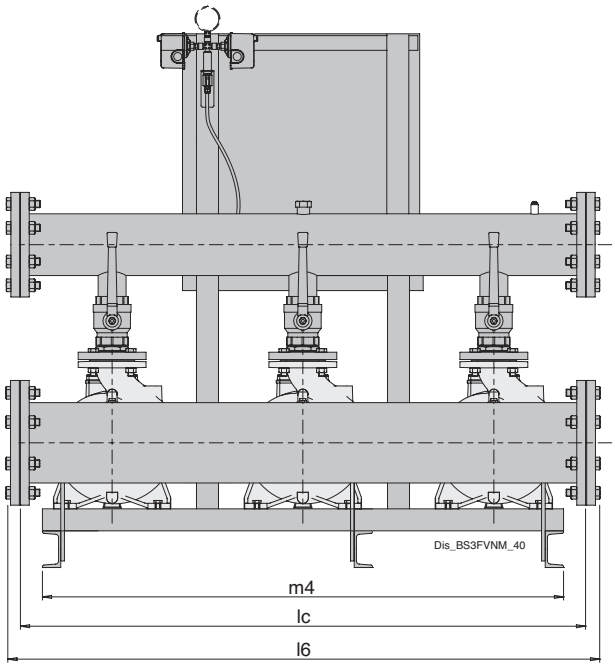


| TYPE | Manifolds | | mm | | | | | | | | | | | Kg |
|---|---|---|---|---|---|---|---|---|---|---|---|---|---|---|
| | DN1 | DN2 | a | a1 | fG | h2 | h3 | h9 | l6 | lc | m4 | n4 | w4 | Weight |
| BS3F 3 NM 40/16B/B | 125 | 100 | 500 | 125 | 1300 | 400 | 292 | 1165 | 1408 | 1340 | 1400 | 1030 | 558 | 358 |
| BS3F 3 NM 40/16A/C | 125 | 100 | 500 | 125 | 1300 | 400 | 292 | 1165 | 1408 | 1340 | 1400 | 1030 | 558 | - |
| BS3F 3 NM 40/20B/A | 125 | 100 | 520 | 125 | 1300 | 420 | 320 | 1165 | 1408 | 1340 | 1400 | 1030 | 558 | - |
| BS3F 3 NM 40/20A/A | 125 | 100 | 520 | 125 | 1300 | 420 | 320 | 1410 | 1408 | 1340 | 1400 | 1030 | 558 | 447 |
| BS3F 3 NM 40/25B/C | 125 | 100 | 520 | 125 | 1357 | 465 | 340 | 1555 | 1408 | 1340 | 1400 | 1030 | 558 | - |
| BS3F 3 NM 40/25A/C | 125 | 100 | 520 | 125 | 1357 | 465 | 340 | 1555 | 1408 | 1340 | 1400 | 1030 | 558 | - |
| BS3F 3 NM 50/16B/B | 150 | 125 | 525 | 142.5 | 1690 | 575 | 315 | 975 | 1515 | 1340 | 1400 | 1430 | 563 | - |
| BS3F 3 NM 50/16A/B | 150 | 125 | 525 | 142.5 | 1690 | 575 | 315 | 1555 | 1515 | 1340 | 1400 | 1430 | 563 | 631 |
| BS3F 3 NM 50/20B/C | 150 | 125 | 525 | 142.5 | 1690 | 575 | 315 | 1555 | 1515 | 1340 | 1400 | 1430 | 563 | - |
| BS3F 3 NM 50/20A/C | 150 | 125 | 525 | 142.5 | 1690 | 575 | 315 | 1555 | 1515 | 1340 | 1400 | 1430 | 563 | - |
| BS3F 3 NM 50/25C/C | 150 | 125 | 525 | 142.5 | 1690 | 575 | 340 | 1555 | 1515 | 1440 | 1400 | 1430 | 563 | - |
| BS3F 3 NM 50/25B/C | 150 | 125 | 525 | 142.5 | 1690 | 575 | 340 | 1555 | 1515 | 1440 | 1400 | 1430 | 563 | 858 |
| BS3F 3 NM 50/25A/D | 150 | 125 | 525 | 142.5 | 1690 | 575 | 340 | 1555 | 1515 | 1440 | 1400 | 1430 | 563 | - |
| BS3F 3 NM 65/16B/C | 250 | 200 | 650 | 202.5 | 1690 | 555 | 320 | 1555 | 1623 | 1540 | 1400 | 1430 | 563 | 706 |
| BS3F 3 NM 65/16AR | 250 | 200 | 650 | 202.5 | 1690 | 555 | 320 | 1555 | 1623 | 1540 | 1400 | 1430 | 563 | - |
| BS3F 3 NM 65/16A/C | 250 | 200 | 650 | 202.5 | 1690 | 555 | 320 | 1555 | 1623 | 1540 | 1400 | 1430 | 563 | 800 |
| BS3F 3 NM 65/20C/C | 250 | 200 | 650 | 202.5 | 1794 | 620 | 340 | 1555 | 1623 | 1540 | 1400 | 1430 | 563 | - |
| BS3F 3 NM 65/20B/D | 250 | 200 | 650 | 202.5 | 1741 | 620 | 340 | 1755 | 1623 | 1900 | 1780 | 1550 | 628 | - |
| BS3F 3 NM 65/20A/A | 250 | 200 | 650 | 202.5 | 1741 | 620 | 340 | 1755 | 1623 | 1900 | 1780 | 1550 | 628 | - |
| BS3F 3 NM 65/25C/A | 250 | 200 | 650 | 202.5 | 1741 | 620 | 340 | 1755 | 1623 | 1900 | 1780 | 1550 | 628 | - |
| BS3F 3 NMS 65/250B/A | 250 | 200 | 650 | 202.5 | - | 605 | 260 | 1855 | - | 1900 | - | - | - | - |
| BS3F 3 NMS 65/250A/B | 250 | 200 | 650 | 202.5 | - | 605 | 310 | 1545 | - | 1900 | - | - | - | - |
| BS3F 3 NM 80/16B/C | 300 | 250 | 755 | 222.5 | - | 645 | 340 | 1555 | - | 1900 | - | - | - | - |
| BS3F 3 NM 80/16A/D | 300 | 250 | 755 | 222.5 | - | 645 | 240 | 1755 | - | 1900 | - | - | - | - |
| BS3F 3 NM 80/20B | 300 | 250 | 755 | 222.5 | - | 670 | 360 | 1855 | - | 1900 | - | - | - | - |
| BS3F 3 NMS 80/200A | 300 | 250 | 755 | 222.5 | - | 670 | 260 | 1855 | - | 1900 | - | - | - | - |
| BS3F 3 NM 80/25E | 300 | 250 | 755 | 222.5 | - | 700 | 360 | 1855 | - | 1900 | - | - | - | - |
| BS3F 3 NMS 80/250D | 300 | 250 | 755 | 222.5 | - | 700 | 260 | 1855 | - | 1900 | - | - | - | - |
| BS3F 3 NMS 80/250C/A | 300 | 250 | 755 | 222.5 | - | 700 | 310 | 1400 | - | 1900 | - | - | - | - |
| BS3F 3 NMS 80/250B/A | 300 | 250 | 755 | 222.5 | - | 700 | 310 | 1400 | - | 1900 | - | - | - | - |
| BS3F 3 NMS 80/250A/A | 300 | 250 | 755 | 222.5 | - | 700 | 310 | 1400 | - | 1900 | - | - | - | - |

Non-binding dimensions to be checked when ordering
Missing dimensions on request

# BS, NM, NMD

## Dimensions and weights

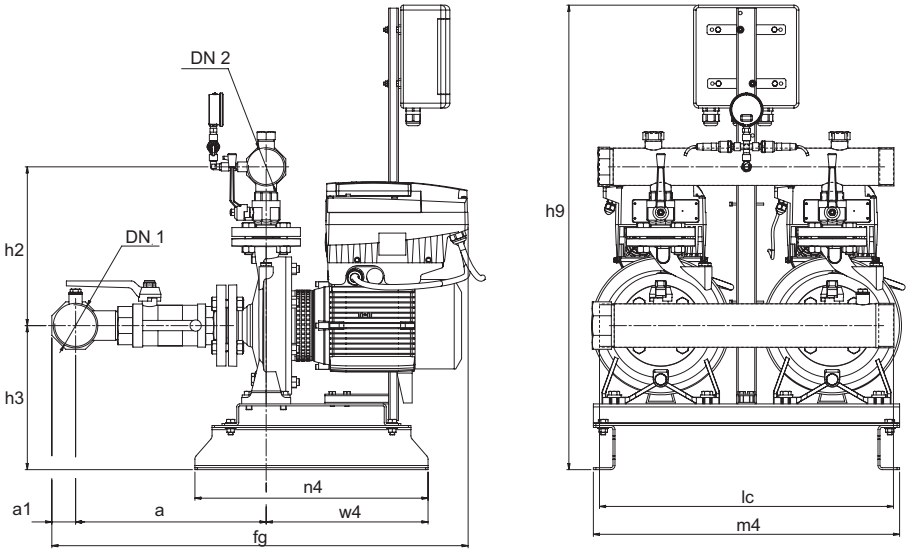


| TYPE | Manifolds | | mm | | | | | | | | | | Kg |
|---|---|---|---|---|---|---|---|---|---|---|---|---|---|
| | DN1 | DN2 | a | a1 | fG | h1 | h3 | h9 | lc | m4 | n4 | w4 | Weight |
| **BS2V 2 NM 32/16B/A-ITT** | G 3 | G 2 1/2 | 389 | 48 | 813 | 266 | 304 | 948 | 600 | 625 | 476 | 330 | - |
| **BS2V 2 NM 32/16A/B-ITT** | G 3 | G 2 1/2 | 389 | 48 | 813 | 266 | 304 | 948 | 600 | 625 | 476 | 370 | 135 |
| **BS2V 2 NM 32/20D/B-ITT** | G 3 | G 2 1/2 | 389 | 48 | 850 | 266 | 304 | 948 | 600 | 625 | 476 | 370 | - |
| **BS2V 2 NM 32/20C/A-ITT** | G 3 | G 2 1/2 | 389 | 48 | 850 | 294 | 324 | 948 | 600 | 625 | 476 | 395 | 156.5 |
| **BS2V 2 NM 32/20A/B-ITT** | G 3 | G 2 1/2 | 389 | 48 | 850 | 294 | 324 | 948 | 600 | 625 | 476 | 395 | 164.5 |

Non-binding dimensions to be checked when ordering
Missing dimensions on request

# BS, NM, NMD

## Dimensions and weights

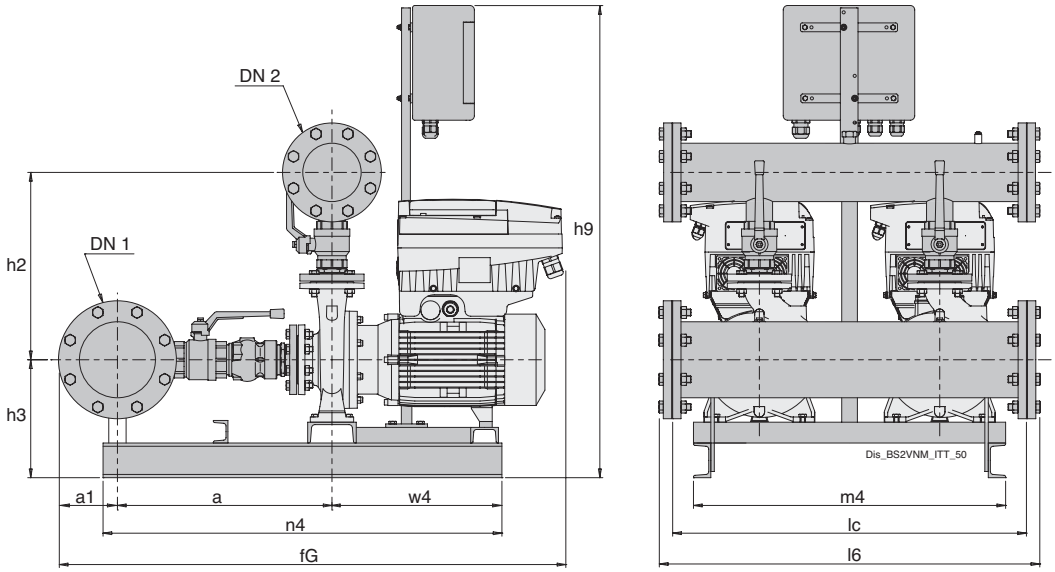


| TYPE | Manifolds | | mm | | | | | | | | | | | Kg |
|---|---|---|---|---|---|---|---|---|---|---|---|---|---|---|
| | DN1 | DN2 | a | a1 | fG | h2 | h3 | h9 | l6 | lc | m4 | n4 | w4 | Weight |
| BS2V 2 NM 32L/16B-ITT | 100 | 80 | 487 | 110 | 1008 | 387 | 280 | 989 | 886 | 820 | 800 | 476 | 325 | 164.5 |
| BS2V 2 NM 32L/16A-ITT | 100 | 80 | 487 | 110 | 1008 | 387 | 280 | 989 | 886 | 820 | 800 | 476 | 325 | 164.5 |
| BS2V 2 NM 32L/20B-ITT | 100 | 80 | 507 | 110 | 1025 | 407 | 320 | 897 | 886 | 820 | 900 | 1040 | 325 | 280.4 |
| BS2V 2 NM 32L/20A-ITT | 100 | 80 | 507 | 110 | 1025 | 407 | 320 | 897 | 886 | 820 | 900 | 1040 | 325 | 164.5 |
| BS2V 2 NM 40/16C/C-ITT | 100 | 80 | 487 | 110 | 990 | 387 | 280 | 897 | 886 | 820 | 800 | 476 | 325 | - |
| BS2V 2 NM 40/16B/B-ITT | 100 | 80 | 487 | 110 | 1006 | 387 | 280 | 897 | 886 | 820 | 800 | 476 | 325 | - |
| BS2V 2 NM 40/16A/C-ITT | 100 | 80 | 487 | 110 | 1006 | 387 | 280 | 897 | 886 | 820 | 800 | 476 | 325 | 210 |
| BS2V 2 NM 40/20D/B-ITT | 100 | 80 | 507 | 110 | 1245 | 407 | 309 | 985 | 886 | 820 | 800 | 476 | 628 | - |
| BS2V 2 NM 40/20C/B-ITT | 100 | 80 | 507 | 110 | 1245 | 407 | 309 | 985 | 886 | 820 | 800 | 476 | 628 | - |
| BS2V 2 NM 40/20B/A-ITT | 100 | 80 | 507 | 110 | 1245 | 407 | 320 | 985 | 886 | 820 | 900 | 1040 | 628 | 286 |
| BS2V 2 NM 40/20AR/A-ITT | 100 | 80 | 507 | 110 | 1245 | 407 | 320 | 897 | 886 | 820 | 900 | 1040 | 628 | 284.5 |
| BS2V 2 NM 40/20A/A-ITT | 100 | 80 | 507 | 110 | 1245 | 407 | 320 | 897 | 886 | 820 | 900 | 1040 | 628 | 312 |
| BS2V 2 NM 40/25C/C-ITT | 100 | 80 | 507 | 110 | 1245 | 452 | 340 | 977 | 886 | 820 | 900 | 1040 | 628 | - |
| BS2V 2 NM 40/25B/C-ITT | 100 | 80 | 507 | 110 | 1245 | 452 | 340 | 977 | 886 | 820 | 900 | 1040 | 628 | 405 |
| BS2V 2 NM 40/25A/C-ITT | 100 | 80 | 507 | 110 | 1245 | 452 | 340 | 977 | 886 | 820 | 900 | 1040 | 628 | - |
| BS2V 2 NM 50/16B/B-ITT | 125 | 100 | 515 | 125 | 1568 | 435 | 315 | 1185 | 988 | 920 | 900 | 1500 | 628 | - |
| BS2V 2 NM 50/16A/B-ITT | 125 | 100 | 515 | 125 | 1568 | 435 | 315 | 1185 | 988 | 920 | 900 | 1500 | 628 | - |
| BS2V 2 NM 50/20B/C-ITT | 125 | 100 | 515 | 125 | 1568 | 455 | 315 | 1185 | 988 | 920 | 900 | 1500 | 628 | 494 |
| BS2V 2 NM 50/20A/C-ITT | 125 | 100 | 515 | 125 | 1568 | 455 | 315 | 1185 | 988 | 920 | 900 | 1500 | 628 | 532 |
| BS2V 2 NM 50/20S/C-ITT | 125 | 100 | 515 | 125 | 1568 | 455 | 315 | 1350 | 988 | 920 | 900 | 1500 | 628 | - |
| BS2V 2 NM 50/25C/C-ITT | 125 | 100 | 515 | 125 | 1568 | 480 | 340 | 1185 | 988 | 920 | 900 | 1500 | 628 | 530 |
| BS2V 2 NM 50/25B/C-ITT | 125 | 100 | 515 | 125 | 1568 | 480 | 340 | 1350 | 988 | 920 | 900 | 1500 | 628 | 630 |
| BS2V 2 NM 50/25A/D-ITT | 125 | 100 | 515 | 125 | 1568 | 480 | 340 | 1350 | 988 | 920 | 900 | 1500 | 628 | 639 |
| BS2V 2 NM 65/16D/B-ITT | 200 | 150 | 625 | 170 | - | 525 | 320 | - | - | 1020 | - | - | 628 | - |
| BS2V 2 NM 65/16C/C-ITT | 200 | 150 | 625 | 170 | - | 525 | 320 | - | - | 1020 | - | - | 628 | - |
| BS2V 2 NM 65/16B/C-ITT | 200 | 150 | 625 | 170 | - | 525 | 320 | - | - | 1020 | - | - | 628 | - |
| BS2V 2 NM 65/16AR-ITT | 200 | 150 | 625 | 170 | - | 525 | 320 | - | - | 1020 | - | - | 628 | - |
| BS2V 2 NM 65/16A/C-ITT | 200 | 150 | 625 | 170 | - | 525 | 320 | - | - | 1020 | - | - | 628 | - |
| BS2V 2 NM 65/20C/C-ITT | 200 | 150 | - | 170 | - | 550 | 340 | - | - | 1020 | - | - | 628 | - |
| BS2V 2 NM 65/20B/D-ITT | 200 | 150 | 852 | 170 | 1817 | 596 | 340 | 1200 | 1277 | 1200 | 900 | 1500 | 628 | - |
| BS2V 2 NM 65/20A/A-ITT | 200 | 150 | - | 170 | - | 550 | 360 | - | - | 1200 | - | - | - | - |
| BS2V 2 NM 65/25C/A-ITT | 200 | 150 | 852 | 170 | 1750 | 575 | 360 | 1490 | 1277 | 1200 | 1200 | 1560 | 665 | 862 |
| BS2V 2 NM 80/16E/B-ITT | 250 | 200 | - | 202.5 | - | 615 | - | - | - | 1050 | - | - | - | - |
| BS2V 2 NM 80/16D/C-ITT | 250 | 200 | - | 202.5 | - | 615 | - | - | - | 1050 | - | - | - | - |
| BS2V 2 NM 80/16C/C-ITT | 250 | 200 | - | 202.5 | - | 615 | - | - | - | 1050 | - | - | - | - |
| BS2V 2 NM 80/16B/C-ITT | 250 | 200 | - | 202.5 | - | 615 | 340 | - | - | 1050 | - | - | - | - |
| BS2V 2 NM 80/16A/D-ITT | 250 | 200 | - | 202.5 | - | 615 | 340 | - | - | 1200 | - | - | - | 712 |
| BS2V 2 NM 80/20B-ITT | 250 | 200 | 989 | 202.5 | 1841 | 678 | 360 | 1450 | 1283 | 1200 | 1100 | 1700 | 840 | - |
| BS2V 2 NM 80/25E-ITT | 250 | 200 | - | 202.5 | - | 670 | 360 | - | - | 1200 | - | - | - | - |
| BS2V 2 NM 100/20E/A-ITT | 300 | 250 | 1083 | 222.5 | - | 770 | 410 | 1490 | - | 1200 | 1200 | 1835 | - | - |
| BS2V 2 NM 100/20D-ITT | 300 | 250 | 1083 | 222.5 | - | 770 | 410 | 1490 | - | 1200 | 1200 | 1835 | - | 1079 |

Non-binding dimensions to be checked when ordering
Missing dimensions on request

# BS, NM, NMD

## Dimensions and weights

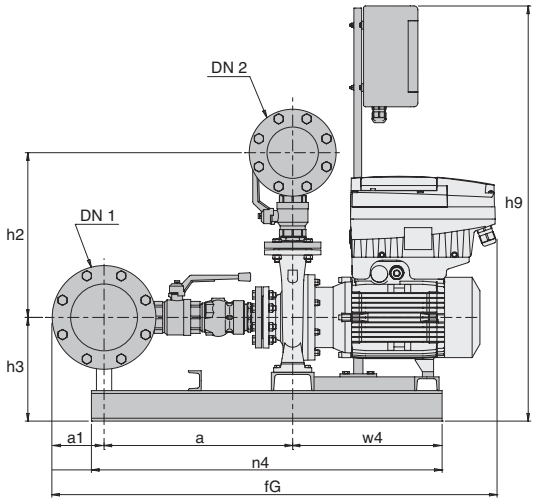


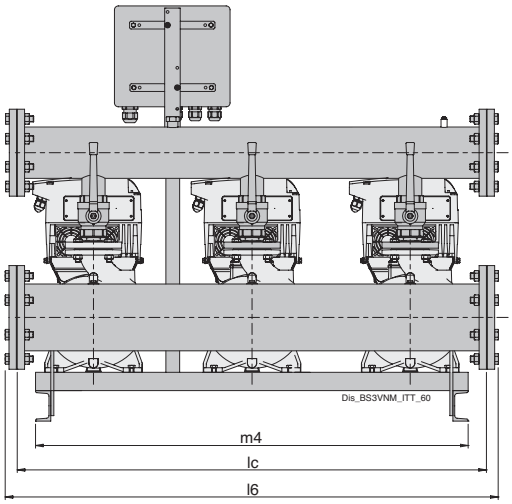


| TYPE | Manifolds | | mm | | | | | | | | | | | Kg |
|---|---|---|---|---|---|---|---|---|---|---|---|---|---|---|
| | DN1 | DN2 | a | a1 | fG | h2 | h3 | h9 | l6 | lc | m4 | n4 | w4 | Weight |
| BS3V 3 NM 32/16B/A-ITT | 100 | 80 | 400 | 110 | 923 | 392 | 310 | 1189 | 1016 | 950 | 1000 | 476 | 340 | - |
| BS3V 3 NM 32/16A/B-ITT | 100 | 80 | 400 | 110 | 923 | 392 | 310 | 1189 | 1016 | 950 | 1000 | 476 | 340 | - |
| BS3V 3 NM 32/20D/B-ITT | 100 | 80 | 400 | 110 | 923 | 392 | 310 | 1189 | 1016 | 950 | 1000 | 476 | 340 | - |
| BS3V 3 NM 32/20C/A-ITT | 100 | 80 | 400 | 110 | 923 | 392 | 310 | 1189 | 1016 | 950 | 1000 | 476 | 340 | 274.5 |
| BS3V 3 NM 32/20A/B-ITT | 100 | 80 | 400 | 110 | 923 | 392 | 310 | 1189 | 1016 | 950 | 1000 | 476 | 340 | - |
| BS3V 3 NM 32L/16B-ITT | 125 | 100 | 500 | 125 | 1263 | 400 | 292 | 985 | 1515 | 1440 | 1400 | 1030 | 558 | 1240 |
| BS3V 3 NM 32L/16A-ITT | 125 | 100 | 500 | 125 | 1263 | 400 | 292 | 985 | 1515 | 1440 | 1400 | 1030 | 558 | 1240 |
| BS3V 3 NM 32L/20B-ITT | 125 | 100 | 500 | 125 | 1263 | 400 | 292 | 985 | 1515 | 1440 | 1400 | 1030 | 558 | 1240 |
| BS3V 3 NM 32L/20A-ITT | 125 | 100 | 500 | 125 | 1263 | 400 | 292 | 985 | 1515 | 1440 | 1400 | 1030 | 558 | 1240 |
| BS3V 3 NM 40/16C/C-ITT | 125 | 100 | 500 | 125 | 1263 | 400 | 292 | 985 | 1515 | 1440 | 1400 | 1100 | 558 | - |
| BS3V 3 NM 40/16B/B-ITT | 125 | 100 | 500 | 125 | 1263 | 400 | 292 | 985 | 1515 | 1440 | 1400 | 1100 | 558 | 362 |
| BS3V 3 NM 40/16A/C-ITT | 125 | 100 | 500 | 125 | 1263 | 400 | 292 | 897 | 1515 | 1440 | 1400 | 1100 | 558 | - |
| BS3V 3 NM 40/20D/B-ITT | 125 | 100 | 520 | 125 | 1283 | 420 | 320 | 897 | 1515 | 1440 | 1400 | 1100 | 558 | - |
| BS3V 3 NM 40/20C/B-ITT | 125 | 100 | 500 | 125 | 1283 | 400 | 292 | 985 | 1515 | 1440 | 1400 | 1100 | 558 | - |
| BS3V 3 NM 40/20B/A-ITT | 125 | 100 | 520 | 125 | 1283 | 420 | 320 | 897 | 1515 | 1440 | 1400 | 1100 | 558 | - |
| BS3V 3 NM 40/20AR/A-ITT | 125 | 100 | 520 | 125 | 1283 | 420 | 320 | 897 | 1515 | 1440 | 1400 | 1100 | 558 | - |
| BS3V 3 NM 40/20A/A-ITT | 125 | 100 | 520 | 125 | 1283 | 420 | 320 | 897 | 1515 | 1440 | 1400 | 1100 | 558 | - |
| BS3V 3 NM 40/25C/C-ITT | 125 | 100 | 520 | 125 | 1330 | 465 | 340 | 977 | 1515 | 1440 | 1400 | 1030 | 558 | - |
| BS3V 3 NM 40/25B/C-ITT | 125 | 100 | 520 | 125 | 1330 | 465 | 340 | 1175 | 1515 | 1440 | 1400 | 1030 | 558 | - |
| BS3V 3 NM 40/25A/C-ITT | 125 | 100 | 520 | 125 | 1330 | 465 | 340 | 977 | 1515 | 1440 | 1400 | 1100 | 558 | - |
| BS3V 3 NM 50/16B/B-ITT | 150 | 125 | 525 | 142.5 | 1653 | 448 | 315 | 977 | 1515 | 1440 | 1400 | 1430 | 558 | - |
| BS3V 3 NM 50/16A/B-ITT | 150 | 125 | 525 | 142.5 | 1653 | 530 | 315 | 1175 | 1515 | 1440 | 1400 | 1430 | 558 | 635.5 |
| BS3V 3 NM 50/20B/C-ITT | 150 | 125 | 525 | 142.5 | 1653 | 468 | 315 | 977 | 1515 | 1440 | 1400 | 1430 | 558 | - |
| BS3V 3 NM 50/20A/C-ITT | 150 | 125 | 525 | 142.5 | 1653 | 468 | 315 | 977 | 1515 | 1440 | 1400 | 1430 | 558 | 786 |
| BS3V 3 NM 50/20S/C-ITT | 150 | 125 | 525 | 142.5 | 1653 | 468 | 315 | 977 | 1515 | 1440 | 1400 | 1430 | 558 | - |
| BS3V 3 NM 50/25C/C-ITT | 150 | 125 | 525 | 142.5 | 1653 | 493 | 340 | 977 | 1515 | 1440 | 1400 | 1430 | 558 | - |
| BS3V 3 NM 50/25B/C-ITT | 150 | 125 | 830 | 142.5 | 1688 | 575 | 340 | 1855 | 1515 | 1440 | 1400 | 1430 | 563 | 952 |
| BS3V 3 NM 50/25A/D-ITT | 150 | 125 | 830 | 142.5 | 1688 | 575 | 340 | 1855 | 1515 | 1440 | 1400 | 1430 | 563 | - |
| BS3V 3 NM 65/16D/B-ITT | 250 | 200 | - | 202.5 | - | - | - | - | - | 1540 | - | - | - | - |
| BS3V 3 NM 65/16C/C-ITT | 250 | 200 | - | 202.5 | - | - | - | - | - | 1540 | - | - | - | - |
| BS3V 3 NM 65/16B/C-ITT | 250 | 200 | - | 202.5 | - | - | - | - | - | 1540 | - | - | - | - |
| BS3V 3 NM 65/16AR-ITT | 250 | 200 | - | 202.5 | - | - | - | - | - | 1540 | - | - | - | - |
| BS3V 3 NM 65/16A/C-ITT | 250 | 200 | - | 202.5 | - | - | - | - | - | 1540 | - | - | - | - |
| BS3V 3 NM 65/20C/C-ITT | 250 | 200 | - | 202.5 | - | - | - | - | - | 1540 | - | - | - | - |
| BS3V 3 NM 65/20B/D-ITT | 250 | 200 | - | 202.5 | - | - | - | - | - | 1900 | - | - | - | - |
| BS3V 3 NM 65/20A/A-ITT | 250 | 200 | - | 202.5 | - | - | - | - | - | 1900 | - | - | - | 1240 |
| BS3V 3 NM 65/25C/A-ITT | 250 | 200 | - | 202.5 | - | - | - | - | - | 1900 | - | - | - | - |
| BS3V 3 NM 80/16E/B-ITT | 300 | 250 | - | 222.5 | - | - | - | - | - | 1900 | - | - | - | - |
| BS3V 3 NM 80/16D/C-ITT | 300 | 250 | - | 222.5 | - | - | - | - | - | 1900 | - | - | - | - |
| BS3V 3 NM 80/16C/C-ITT | 300 | 250 | - | 222.5 | - | - | - | - | - | 1900 | - | - | - | - |
| BS3V 3 NM 80/16B/C-ITT | 300 | 250 | - | 222.5 | - | - | - | - | - | 1900 | - | - | - | - |
| BS3V 3 NM 80/16A/D-ITT | 300 | 250 | 1015 | 222.5 | 2035 | 700 | 390 | 1985 | 1983 | 1900 | 1850 | 1830 | 650 | - |
| BS3V 3 NM 80/20B-ITT | 300 | 250 | - | 222.5 | - | - | - | - | - | 1900 | - | - | - | - |
| BS3V 3 NM 80/25E-ITT | 300 | 250 | - | 222.5 | - | - | - | - | - | 1900 | - | - | - | - |
| BS3V 3 NM 100/20E/A-ITT | 350 | 300 | - | 252.5 | - | - | - | - | - | 1900 | - | - | - | - |
| BS3V 3 NM 100/20D-ITT | 350 | 300 | - | 252.5 | - | - | - | - | - | 1900 | - | - | - | - |

Non-binding dimensions to be checked when ordering
Missing dimensions on request

# BS. MXH

Pressure boosting plants with 1 to 3 fixed or variable horizontal multi-stage pumps (INVERTER)

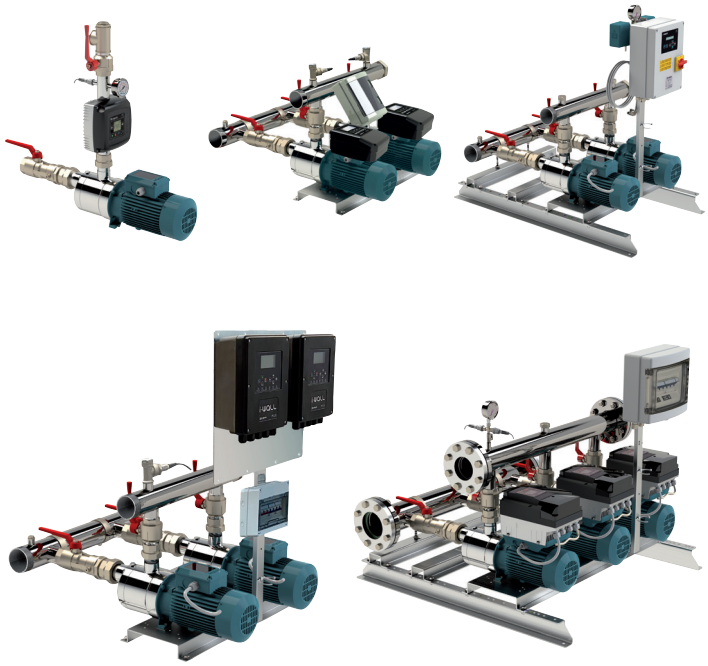

## Fixed speed units

BS 2-6F Pressure boosting sets with 2 to 6 fixed speed pump.
Sets with 4,5 and 6 pumps on request.
Depending on the reduction of the pressure in the system, the pressure switches (pressure transducer for 3-pump sets) determine the starting up of the pumps in sequence and the microprocessor alternates the starts.

## Variable speed units with I-MAT

BS2-3V Pressure boosting sets with 2 to 3 variable speed pumps (with I-MAT).
Depending on water consumption, one or more pumps are activated, all at variable speed, in order to guarantee the quantity of water required at the set pressure.

## Variable speed units with EASYMAT

BS1-3V Pressure boosting sets with 1 to 3 variable speed pumps (with EASYMAT).
Depending on water consumption, one or more pumps are activated, all at variable speed, in order to guarantee the quantity of water required at the set pressure.

## Variable speed pump units with EASYMAT2

BS2V Pressure boosting sets with 2 variable speed pumps with EASYMAT2.
Depending on water consumption, one or more pumps are activated, all at variable speed, in order to guarantee the quantity of water required at the set pressure.

## Variable speed pump units with WALL

BS2V Pressure boosting sets with 2 variable speed pumps with WALL.
Depending on water consumption, one or more pumps are activated, all at variable speed, in order to guarantee the quantity of water required at the set pressure.

## Coverage chart

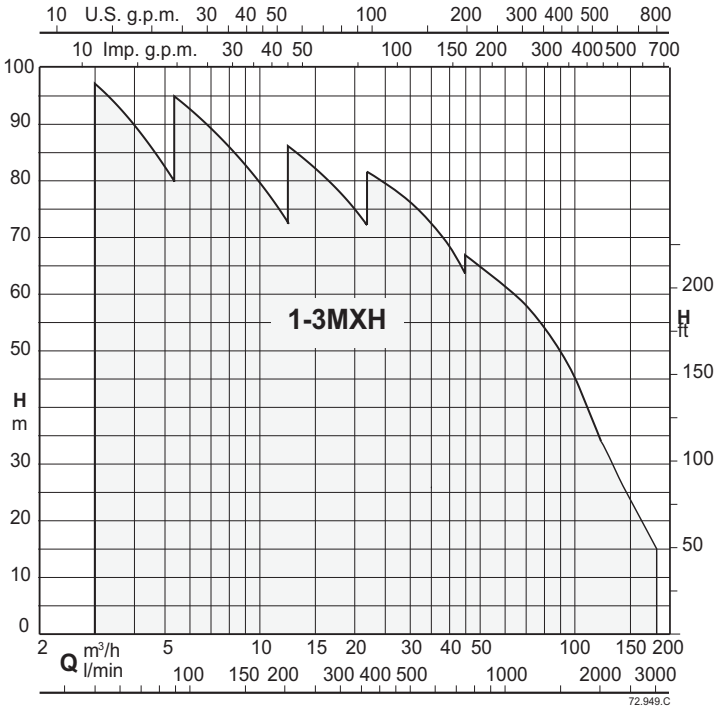


## Construction

Automatic pressure boosting plant consisting of 1 to 6 horizontal multistage pumps complete with ball, non return valve on the suction side and ball valves on the delivery side.
Suction and delivery manifolds for boosting sets with 2,3 pumps in stainless steel AISI 304.
Connections are located on the delivery manifold for the installation of vessels with a G1 connection.
Electrical control boards:

- with microprocessor for fixed speed pump units. Motor starting is D.O.L. up to 5,5 kW and Y/Δ for power rating 7,5 kW.
- with frequency converter for variable speed pump units.

The unit includes one pressure gauge and three adjustable differential pressure switches or pressure transducer.

## Applications

To supply water in civil and industrial buildings.
For increasing network pressure (follow local specifications).

## Motor

2-pole induction motors, 50 Hz, n ≈ 2900 1/min, set up for inverter operation.
Three-phase 230/400V ± 10% up to a 3 kW,
set up for inverter operation;
400/690 ± 10% from 4 to 7,5 kW,
set up for inverter operation.
Single-phase 230 V ± 10%
Insulation class F.
Protection IP54
Constructed in accordance with: IEC 60034.
Other voltages and frequencies on request.

## Vessels on request

When installing the unit, connect in the delivery section to a diaphragm or galvanised tank.
The recommended sized are shown in the following page.

## Special features on request

Pressure unit with 4, 5 and 6 pumps

# BS. MXH

## Characteristic curves

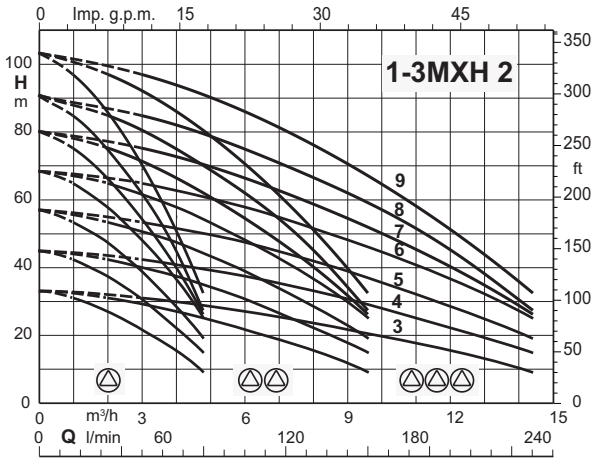


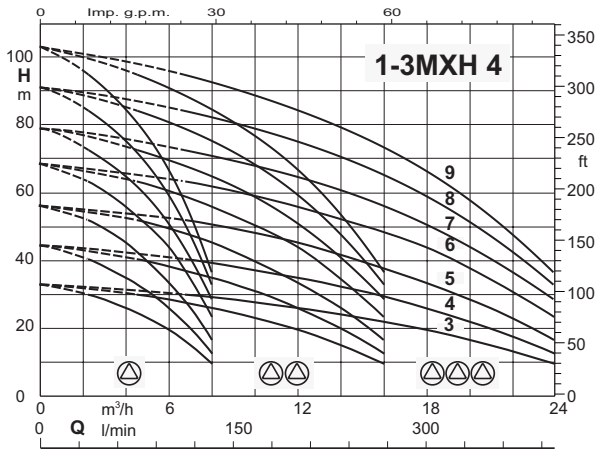


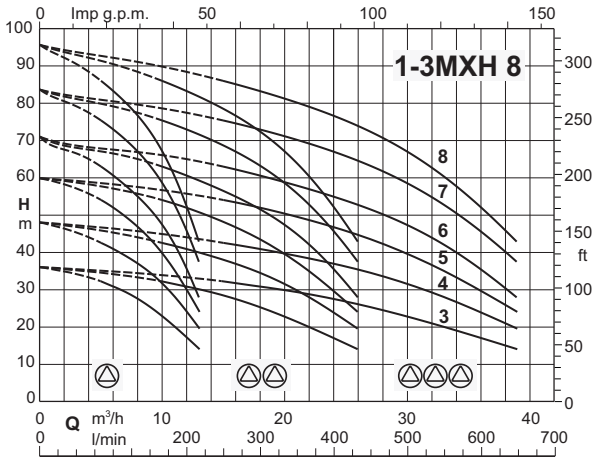


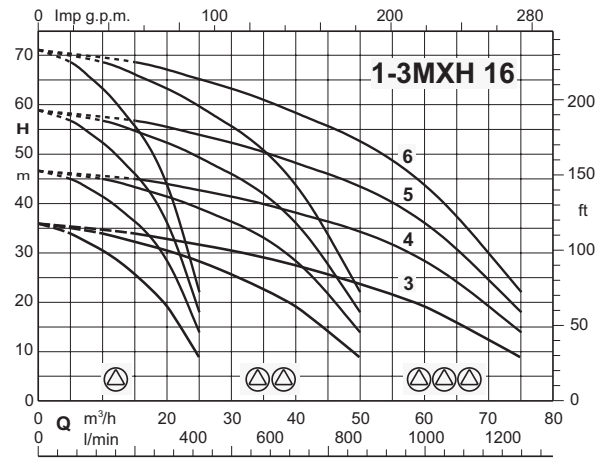


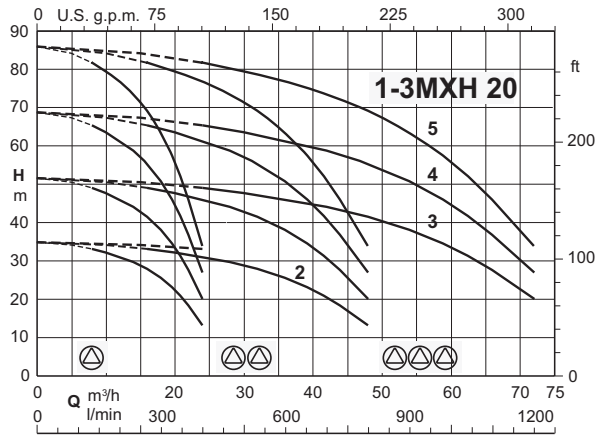


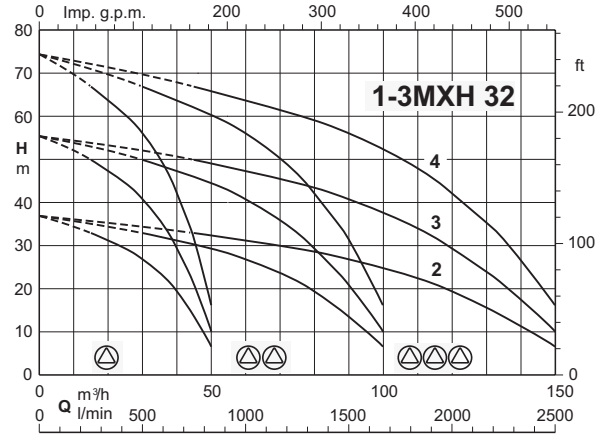


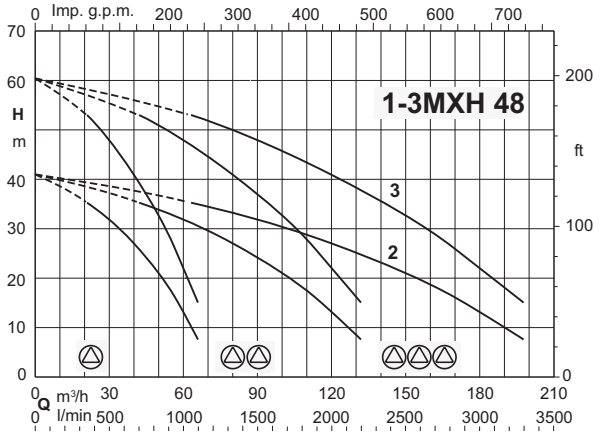

# BS. MXH

calpeda

**Fixed speed pump units**

**BS2F**

| | | Pressure switch | | Tank | |
|---|---|---|---|---|---|
| | | 1 | 2 | membrane | Vessel |
| Model | P2 | Start/Stop | | | |
| | kW | bar | | litri | |
| BS2F 2 MXH 203E | 0.37 X2 | 2 - 2.8 | 1.7 - 2.5 | 24X2 | 100 |
| BS2F 2 MXH 204/A | 0.55 X2 | 3 - 3.9 | 2.7 - 3.6 | 24X2 | 100 |
| BS2F 2 MXH 205/B | 0.75 X2 | 3.3 - 4.9 | 3.1 - 4.6 | 24X2 | 100 |
| BS2F 2 MXH 206/C | 1.1 X2 | 4.3 - 5.9 | 4 - 5.6 | 60 | 100 |
| BS2F 2 MXH 207 | 1.1 X2 | 5.1-6.9 | 4.8-6.6 | 60 | 100 |
| BS2F 2 MXH 208 | 1.5 X2 | 5.8-7.7 | 5.6-7.4 | 60 | 100 |
| BS2F 2 MXH 209 | 1.5 X2 | 6.8-8.9 | 6.6-8.6 | 60 | 100 |
| BS2F 2 MXH 403/A | 0.55 X2 | 1.9 - 2.7 | 1.6 - 2.4 | 80 | 200 |
| BS2F 2 MXH 404/B | 0.75 X2 | 2.9 - 3.7 | 2.6 - 3.4 | 100 | 200 |
| BS2F 2 MXH 405/C | 1.1 X2 | 3.2 - 4.7 | 2.9 - 4.4 | 100 | 200 |
| BS2F 2 MXH 406/A | 1.5 X2 | 4.1 - 5.7 | 3.8 - 5.4 | 150 | 200 |
| BS2F 2 MXH 407 | 1.5 X2 | 4.9-6.7 | 4.6-6.4 | 150 | 200 |
| BS2F 2 MXH 408 | 1.8 X2 | 5.8-7.7 | 5.6-7.4 | 150 | 200 |
| BS2F 2 MXH 409 | 2.2 X2 | 6.7-8.7 | 6.4-8.4 | 150 | 200 |
| BS2F 2 MXH 803/A | 1.1 X2 | 2.1 - 2.9 | 1.8 - 2.6 | 200 | 500 |
| BS2F 2 MXH 804/A | 1.5 X2 | 3 - 3.9 | 2.7 - 3.6 | 300 | 500 |
| BS2F 2 MXH 805/B | 1.8 X2 | 3.4 - 4.9 | 3.1 - 4.6 | 300 | 500 |
| BS2F 2 MXH 806 | 2.2 X2 | 4.1-5.8 | 3.8-5.5 | 300 | 500 |
| BS2F 2 MXH 807 | 3 X2 | 5,1-6.9 | 4.8-6.6 | 300 | 500 |
| BS2F 2 MXH 808 | 3 X2 | 5.9-7.8 | 5.7-7.5 | 300 | 500 |
| BS2F 2 MXH 1602/A | 1.5 X2 | 0.6 - 2.1 | 0.3 - 1.8 | 300 | 800 |
| BS2F 2 MXH 1603/B | 1.8 X2 | 2.3 - 3.1 | 2 - 2.8 | 300 | 800 |
| BS2F 2 MXH 1604/A | 3 X2 | 3.3 - 4.2 | 3 - 3.9 | 500 | 1000 |
| BS2F 2 MXH 1605/B | 3.7 X2 | 3.7 - 5.2 | 3.4 - 4.9 | 500 | 1000 |
| BS2F 2 MXH 1606/B | 4 X2 | 4.5 - 6.2 | 4.2 - 5.9 | 500 | 1000 |
| BS2F 2 MXH 2002/A | 1.8 X2 | 2.1 - 2.9 | 1.8 - 2.6 | 500 | 1000 |
| BS2F 2 MXH 2003 | 3 X2 | 3 - 4.5 | 2.7 - 4.2 | 500 | 800 |
| BS2F 2 MXH 2004/A | 4 X2 | 4.3 - 5.9 | 4 - 5.6 | 500 | 1000 |
| BS2F 2 MXH 2005 | 5.5 X2 | 5.5 - 7.4 | 5.3 - 7.1 | 750 | 1500 |
| BS2F 2 MXH-F 3202/B | 4 X2 | 2.2 - 3 | 1.9 - 2.7 | 1000 | 2000 |
| BS2F 2 MXH-F 3203/A | 5.5 X2 | 3.1 - 4.6 | 2.8 - 4.3 | 1000 | 2000 |
| BS2F 2 MXH-F 3204/A | 7.5 X2 | 4.4 - 6.1 | 4.1 - 5.8 | 1500 | 3000 |
| BS2F 2 MXH-F 4802/A | 5.5 X2 | 2.4 - 3.2 | 2.1 - 2.9 | 1500 | 3000 |
| BS2F 2 MXH-F 4803/A | 7.5 X2 | 3.3 - 4.8 | 3 - 4.5 | 1500 | 3000 |

400V 3~ power supply / 400V 3~ motor
Start and stop pressure controlled by pressure switches

**BS3F**

| | | Transducer | Tank | |
|---|---|---|---|---|
| | | 1 | membrane | Vessel |
| Model | P2 | Start/Stop | | |
| | kW | bar | litri | |
| BS3F 3 MXH 203E | 0.37 X3 | 2 - 2.8 | 24X2 | 100 |
| BS3F 3 MXH 204/A | 0.55 X3 | 2.9 - 3.8 | 24X2 | 100 |
| BS3F 3 MXH 205/B | 0.75 X3 | 3.3 - 4.8 | 24X2 | 100 |
| BS3F 3 MXH 206/C | 1.1 X3 | 4.2 - 5.9 | 60 | 100 |
| BS3F 3 MXH 207 | 1.1 X3 | 5-6.8 | 60 | 100 |
| BS3F 3 MXH 208 | 1.5 X3 | 5.8-7.7 | 60 | 100 |
| BS3F 3 MXH 209 | 1.5 X3 | 6.8-8.8 | 60 | 100 |
| BS3F 3 MXH 403/A | 0.55 X3 | 1.9 - 2.7 | 80 | 200 |
| BS3F 3 MXH 404/B | 0.75 X3 | 2.8 - 3.6 | 100 | 200 |
| BS3F 3 MXH 405/C | 1.1 X3 | 3.2 - 4.7 | 100 | 200 |
| BS3F 3 MXH 406/A | 1.5 X3 | 4 - 5.7 | 150 | 200 |
| BS3F 3 MXH 407 | 1.5 X3 | 4.8-6.6 | 150 | 200 |
| BS3F 3 MXH 408 | 1.8 X3 | 5.8-7.7 | 150 | 200 |
| BS3F 3 MXH 409 | 2.2 X3 | 6.6-8.7 | 150 | 200 |
| BS3F 3 MXH 803/A | 1.1 X3 | 2.1 - 2.9 | 200 | 500 |
| BS3F 3 MXH 804/A | 1.5 X3 | 2.9 - 3.8 | 300 | 500 |
| BS3F 3 MXH 805/B | 1.8 X3 | 3.4 - 4.9 | 300 | 500 |
| BS3F 3 MXH 806 | 2.2 X3 | 4-5.7 | 300 | 500 |
| BS3F 3 MXH 807 | 3 X3 | 5-6.8 | 300 | 500 |
| BS3F 3 MXH 808 | 3 X3 | 5.9-7.8 | 300 | 500 |
| BS3F 3 MXH 1602/A | 1.5 X3 | 0.6 - 2.1 | 300 | 800 |
| BS3F 3 MXH 1603/B | 1.8 X3 | 2.2 - 3 | 300 | 800 |
| BS3F 3 MXH 1604/A | 3 X3 | 3.3 - 4.2 | 500 | 1000 |
| BS3F 3 MXH 1605/B | 3.7 X3 | 3.6 - 5.2 | 500 | 1000 |
| BS3F 3 MXH 1606/B | 4 X3 | 4.4 - 6.1 | 500 | 1000 |
| BS3F 3 MXH 2002/A | 1.8 X3 | 2.1 - 2.9 | 500 | 1000 |
| BS3F 3 MXH 2003 | 3 X3 | 3.4 - 4.3 | 500 | 800 |
| BS3F 3 MXH 2004/A | 4 X3 | 4.1 - 5.8 | 500 | 1000 |
| BS3F 3 MXH 2005 | 5.5 X3 | 5.4 - 7.3 | 750 | 1500 |
| BS3F 3 MXH-F 3202/B | 4 X3 | 2.1 - 2.9 | 1000 | 2000 |
| BS3F 3 MXH-F 3203/B | 5.5 X3 | 2.9 - 4.4 | 1000 | 2000 |
| BS3F 3 MXH-F 3204/A | 7.5 X3 | 4.3 - 6 | 1500 | 3000 |
| BS3F 3 MXH-F 4802/A | 5.5 X3 | 2.3 - 3.1 | 1500 | 3000 |
| BS3F 3 MXH-F 4803/A | 7.5 X3 | 3.2 - 4.7 | 1500 | 3000 |

400V 3~ power supply / 400V 3~ motor
Start and stop pressure controlled by a pressure transducer

**BSM2F**

| | | Pressure switch | | Tank | |
|---|---|---|---|---|---|
| | | 1 | 2 | membrane | Vessel |
| Model | P2 | Start/Stop | | | |
| | kW | bar | | litri | |
| BSM2F 2 MXHM 203E | 0.37 X2 | 2 - 2.8 | 1.7 - 2.5 | 24X2 | 100 |
| BSM2F 2 MXHM 204/A | 0.55 X2 | 3 - 3.9 | 2.7 - 3.6 | 24X2 | 100 |
| BSM2F 2 MXHM 205/A | 0.75 X2 | 3.3 - 4.9 | 3.1 - 4.6 | 24X2 | 100 |
| BSM2F 2 MXHM 206 | 1.1 X2 | 4.3 - 5.9 | 4 - 5.6 | 60 | 100 |
| BSM2F 2 MXHM 207 | 1.1 X2 | 5.1-6.9 | 4.8-6.6 | 60 | 100 |
| BSM2F 2 MXHM 208 | 1.5 X2 | 5.8-7.7 | 5.6-7.4 | 60 | 100 |
| BSM2F 2 MXHM 209 | 1.5 X2 | 6.8-8.9 | 6.6-8.6 | 60 | 100 |
| BSM2F 2 MXHM 403/A | 0.55 X2 | 1.9 - 2.7 | 1.6 - 2.4 | 80 | 200 |
| BSM2F 2 MXHM 404/A | 0.75 X2 | 2.9 - 3.7 | 2.6 - 3.4 | 100 | 200 |
| BSM2F 2 MXHM 405 | 1.1 X2 | 3.2 - 4.7 | 2.9 - 4.4 | 100 | 200 |
| BSM2F 2 MXHM 406 | 1.5 X2 | 4.1 - 5.7 | 3.8 - 5.4 | 150 | 200 |
| BSM2F 2 MXHM 407 | 1.5 X2 | 4.9-6.7 | 4.6-6.4 | 150 | 200 |
| BSM2F 2 MXHM 803 | 1.1 X2 | 2.1 - 2.9 | 1.8 - 2.6 | 200 | 500 |
| BSM2F 2 MXHM 804 | 1.5 X2 | 3 - 3.9 | 2.7 - 3.6 | 300 | 500 |

230V 1~ power supply / 230V 1~ motor
Start and stop pressure controlled by pressure switches

# BS. MXH

calpeda

**Variable speed pump units with frequency converter**

**BSM1V ..-EMT**

| | | voltage | |
|---|---|---|---|
| | | Mains Voltage | Motor |
| Model | P2 | 1 ~230 V | 3 ~230 V |
| | kW | A | A. |
| BSM1V 1 MXH 203E-EMT | 0.37 | 4,9 | 2,4 |
| BSM1V 1 MXH 204/A-EMT | 0.55 | 6,3 | 2,8 |
| BSM1V 1 MXH 205/B-EMT | 0.75 | 7,4 | 3,5 |
| BSM1V 1 MXH 206/C-EMT | 1.1 | 10,6 | 4,6 |
| BSM1V 1 MXH 207-EMT | 1.1 | 10.6 | 4.6 |
| BSM1V 1 MXH 208-EMT | 1.5 | 14.6 | 6.2 |
| BSM1V 1 MXH 209-EMT | 1.5 | 14.6 | 6.2 |
| BSM1V 1 MXH 403/A-EMT | 0.55 | 6,3 | 2,8 |
| BSM1V 1 MXH 404/B-EMT | 0.75 | 7,4 | 3,5 |
| BSM1V 1 MXH 405/C-EMT | 1.1 | 10,6 | 4,6 |
| BSM1V 1 MXH 406/A-EMT | 1.5 | 14,6 | 6,2 |
| BSM1V 1 MXH 407-EMT | 1.5 | 14.6 | 6.2 |
| BSM1V 1 MXH 408-EMT | 1.8 | 17,6 | 8.3 |
| BSM1V 1 MXH 803/A-EMT | 1.1 | 10,6 | 4,6 |
| BSM1V 1 MXH 804/A-EMT | 1.5 | 14,6 | 6,2 |
| BSM1V 1 MXH 805/B-EMT | 1.8 | 17,6 | 8,3 |
| BSM1V 1 MXH 1603/B-EMT | 1.8 | 17,6 | 8,3 |

**BSM1V ..-EMM**

| | |
|---|---|
| Model | P2 |
| | kW |
| BSM1V 1 MXHM 204/A-EMM | 0.55 |
| BSM1V 1 MXHM 205/A-EMM | 0.75 |
| BSM1V 1 MXHM 206-EMM | 1.1 |
| BSM1V 1 MXHM 403/A-EMM | 0.55 |
| BSM1V 1 MXHM 404/A-EMM | 0.75 |
| BSM1V 1 MXHM 405-EMM | 1.1 |
| BSM1V 1 MXHM 803-EMM | 1.1 |
| BSM1V 1 MXHM 803-EMM | 1.1 |

**BSM2V ..-EMT2**

| | |
|---|---|
| Model | P2 |
| | kW |
| BSM2V 2 MXH 203E-EMT2 | 0.37 X2 |
| BSM2V 2 MXH 204/A-EMT2 | 0.55 X2 |
| BSM2V 2 MXH 205/B-EMT2 | 0.75 X2 |
| BSM2V 2 MXH 206/C-EMT2 | 1.1 X2 |
| BSM2V 2 MXH 403/A-EMT2 | 0.55 X2 |
| BSM2V 2 MXH 404/B-EMT2 | 0.75 X2 |
| BSM2V 2 MXH 405/C-EMT2 | 1.1 X2 |
| BSM2V 2 MXH 406/A-EMT2 | 1.5 X2 |
| BSM2V 2 MXH 803/A-EMT2 | 1.1 X2 |
| BSM2V 2 MXH 804/A-EMT2 | 1.5 X2 |
| BSM2V 2 MXH 805/B-EMT2 | 1.8 X2 |

**BSM2V ..-EMT**

| | | voltage | |
|---|---|---|---|
| | | Mains Voltage | Motor |
| Model | P2 | 1 ~230 V | 3 ~230 V |
| | kW | A | A. |
| BSM2V 2 MXH 203E-EMT | 0.37 X2 | 4,9 X 2 | 2,4 X 2 |
| BSM2V 2 MXH 204/A-EMT | 0.55 X2 | 6,3 X 2 | 2,8 X 2 |
| BSM2V 2 MXH 205/B-EMT | 0.75 X2 | 7,4 X 2 | 3,5 X 2 |
| BSM2V 2 MXH 206/C-EMT | 1.1 X2 | 10,6 X 2 | 4,6 X 2 |
| BSM2V 2 MXH 207-EMT | 1.1 X2 | 10,6 X 2 | 4,6 X 2 |
| BSM2V 2 MXH 208-EMT | 1.5 X2 | 14,6 X 2 | 6,2 X 2 |
| BSM2V 2 MXH 209-EMT | 1.5 X2 | 14,6 X 2 | 6,2 X 2 |
| BSM2V 2 MXH 403/A-EMT | 0.55 X2 | 6,3 X 2 | 2,8 X 2 |
| BSM2V 2 MXH 404/B-EMT | 0.75 X2 | 7,4 X 2 | 3,5 X 2 |
| BSM2V 2 MXH 405/C-EMT | 1.1 X2 | 10,6 X 2 | 4,6 X 2 |
| BSM2V 2 MXH 406/A-EMT | 1.5 X2 | 14,6 X 2 | 6,2 X 2 |
| BSM2V 2 MXH 407-EMT | 1.5 X2 | 14,6 X 2 | 6,2 X 2 |
| BSM2V 2 MXH 408-EMT | 1.8 X2 | 17,6 X 2 | 8,3 X 2 |
| BSM2V 2 MXH 803/A-EMT | 1.1 X2 | 10,6 X 2 | 4,6 X 2 |
| BSM2V 2 MXH 804/A-EMT | 1.5 X2 | 14,6 X 2 | 6,2 X 2 |
| BSM2V 2 MXH 805/B-EMT | 1.8 X2 | 17,6 X 2 | 8,3 X 2 |
| BSM2V 2 MXH 1603/B-EMT | 1.8 X2 | 17,6 X 2 | 8,3 X 2 |

**BSM3V ..-EMT**

| | | voltage | |
|---|---|---|---|
| | | Mains Voltage | Motor |
| Model | P2 | 1 ~230 V | 3 ~230 V |
| | kW | A | A. |
| BSM3V 3 MXH 203E-EMT | 0.37 X3 | 4,9 X 3 | 2,4 X 3 |
| BSM3V 3 MXH 204/A-EMT | 0.55 X3 | 6,3 X 3 | 2,8 X 3 |
| BSM3V 3 MXH 205/B-EMT | 0.75 X3 | 7,4 X 3 | 3,5 X 3 |
| BSM3V 3 MXH 206/C-EMT | 1.1 X3 | 10,6 X 3 | 4,6 X 3 |
| BSM3V 3 MXH 207-EMT | 1.1 X3 | 10,6 X 3 | 4,6 X 3 |
| BSM3V 3 MXH 208-EMT | 1.5 X3 | 14,6 X 3 | 6,2 X 3 |
| BSM3V 3 MXH 209-EMT | 1.5 X3 | 14,6 X 3 | 6,2 X 3 |
| BSM3V 3 MXH 403/A-EMT | 0.55 X3 | 6,3 X 3 | 2,8 X 3 |
| BSM3V 3 MXH 404/B-EMT | 0.75 X3 | 7,4 X 3 | 3,5 X 3 |
| BSM3V 3 MXH 405/C-EMT | 1.1 X3 | 10,6 X 3 | 4,6 X 3 |
| BSM3V 3 MXH 406/A-EMT | 1.5 X3 | 14,6 X 3 | 6,2 X 3 |
| BSM3V 3 MXH 407-EMT | 1.5 X3 | 14,6 X 3 | 6,2 X 3 |
| BSM3V 3 MXH 408-EMT | 1.8 X3 | 17,6 X 3 | 8,3 X 3 |
| BSM3V 3 MXH 803/A-EMT | 1.1 X3 | 10,6 X 3 | 4,6 X 3 |
| BSM3V 3 MXH 804/A-EMT | 1.5 X3 | 14,6 X 3 | 6,2 X 3 |
| BSM3V 3 MXH 805/B-EMT | 1.8 X3 | 17,6 X 3 | 8,3 X 3 |
| BSM3V 3 MXH 1603/B-EMT | 1.8 X3 | 17,6 X 3 | 8,3 X 3 |

**BS2V ..-WALL**

| | |
|---|---|
| Model | P2 |
| | kW |
| BS2V 2 MXH 405-WALL | 0.75 X2 |
| BS2V 2 MXH 406-WALL | 1.1 X2 |
| BS2V 2 MXH 805-WALL | 1.8 X2 |

# BS. MXH

calpeda®

**Variable speed pump units with frequency converter**

**BS2V ..-ITT**

| Model | P2 |
|---|---|
| | kW |
| BS2V 2 MXH 204/A-ITT | 0.55 X2 |
| BS2V 2 MXH 205/B-ITT | 0.75 X2 |
| BS2V 2 MXH 206/C-ITT | 1.1 X2 |
| BS2V 2 MXH 207C-ITT | 1.1 X2 |
| BS2V 2 MXH 208-ITT | 1.5 X2 |
| BS2V 2 MXH 209-ITT | 1.5 X2 |
| BS2V 2 MXH 403/A-ITT | 0.55 X2 |
| BS2V 2 MXH 404/B-ITT | 0.75 X2 |
| BS2V 2 MXH 405/C-ITT | 1.1 X2 |
| BS2V 2 MXH 406/A-ITT | 1.5 X2 |
| BS2V 2 MXH 407-ITT | 1.5 X2 |
| BS2V 2 MXH 408-ITT | 1.8 X2 |
| BS2V 2 MXH 409-ITT | 2.2 X2 |
| BS2V 2 MXH 803/A-ITT | 1.1 X2 |
| BS2V 2 MXH 804/A-ITT | 1.5 X2 |
| BS2V 2 MXH 805/B-ITT | 1.8 X2 |
| BS2V 2 MXH 806-ITT | 2.2 X2 |
| BS2V 2 MXH 807-ITT | 3 X2 |
| BS2V 2 MXH 808-ITT | 3 X2 |
| BS2V 2 MXH 1603/B-ITT | 1.8 X2 |
| BS2V 2 MXH 1604/A-ITT | 3 X2 |
| BS2V 2 MXH 1605/B-ITT | 3.7 X2 |
| BS2V 2 MXH 1606/B-ITT | 4 X2 |
| BS2V 2 MXH 2002/A-ITT | 1.8 X2 |
| BS2V 2 MXH 2003-ITT | 3 X2 |
| BS2V 2 MXH 2004/A-ITT | 4 X2 |
| BS2V 2 MXH 2005-ITT | 5.5 X2 |
| BS2V 2 MXH-F 3202/B-ITT | 4 X2 |
| BS2V 2 MXH-F 3203/A-ITT | 5.5 X2 |
| BS2V 2 MXH-F 3204/A-ITT | 7.5 X2 |
| BS2V 2 MXH-F 4802/A-ITT | 5.5 X2 |
| BS2V 2 MXH-F 4803/A-ITT | 7.5 X2 |

**BS3V ..-ITT**

| Model | P2 |
|---|---|
| | kW |
| BS3V 3 MXH 204/A-ITT | 0.55 X3 |
| BS3V 3 MXH 205/B-ITT | 0.75 X3 |
| BS3V 3 MXH 206/C-ITT | 1.1 X3 |
| BS3V 3 MXH 207-ITT | 1.5 X3 |
| BS3V 3 MXH 208-ITT | 1.5 X3 |
| BS3V 3 MXH 209-ITT | 1.5 X3 |
| BS3V 3 MXH 403/A-ITT | 0.55 X3 |
| BS3V 3 MXH 404/B-ITT | 0.75 X3 |
| BS3V 3 MXH 405/C-ITT | 1.1 X3 |
| BS3V 3 MXH 406/A-ITT | 1.5 X3 |
| BS3V 3 MXH 407-ITT | 1.5 X3 |
| BS3V 3 MXH 408-ITT | 1.8 X3 |
| BS3V 3 MXH 409-ITT | 2.2 X3 |
| BS3V 3 MXH 803/A-ITT | 1.1 X3 |
| BS3V 3 MXH 804/A-ITT | 1.5 X3 |
| BS3V 3 MXH 805/B-ITT | 1.8 X3 |
| BS3V 3 MXH 806-ITT | 2.2 X3 |
| BS3V 3 MXH 807-ITT | 3 X3 |
| BS3V 3 MXH 808-ITT | 3 X3 |
| BS3V 3 MXH 1603/B-ITT | 1.8 X3 |
| BS3V 3 MXH 1604/A-IT | 1.8 |
| BS3V 3 MXH 1605/B-ITT | 3.7 X3 |
| BS3V 3 MXH 1606/B-ITT | 4 X3 |
| BS3V 3 MXH 2002/A-ITT | 1.8 X3 |
| BS3V 3 MXH 2003-ITT | 3 X3 |
| BS3V 3 MXH 2004/A-ITT | 4 X3 |
| BS3V 3 MXH 2005-ITT | 5.5 X3 |
| BS3V 3 MXH-F 3202/B-ITT | 4 X3 |
| BS3V 3 MXH-F 3203/A-ITT | 5.5 X3 |
| BS3V 3 MXH-F 3204/A-ITT | 7.5 X3 |
| BS3V 3 MXH-F 4802/A-ITT | 5.5 X3 |
| BS3V 3 MXH-F 4803/A-ITT | 7.5 X3 |

# BS. MXH

## Dimensions and weights

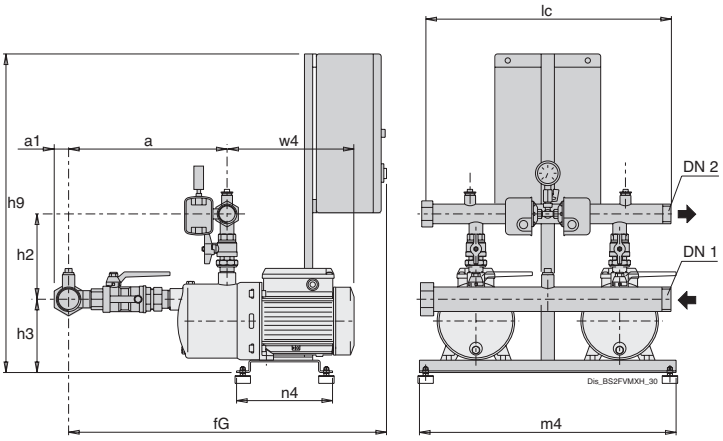


| TYPE | Manifolds | | mm | | | | | | | | | Kg |
|---|---|---|---|---|---|---|---|---|---|---|---|---|
| | DN1 | DN2 | a | a1 | fG | h2 | h3 | h9 | lc | m4 | n4 | Weight |
| **BS2F 2 MXH 203E** | G 2 | G 1 1/2 | 322 | 32 | 757 | 190 | 161 | 854 | 600 | 625 | 240 | 37.1 |
| **BS2F 2 MXH 204/A** | G 2 | G 1 1/2 | 346 | 32 | - | 190 | 161 | 854 | 600 | 625 | 240 | 42 |
| **BS2F 2 MXH 205/B** | G 2 | G 1 1/2 | 370 | 32 | - | 190 | 161 | 854 | 600 | 625 | 240 | 47.5 |
| **BS2F 2 MXH 206/C** | G 2 | G 1 1/2 | 394 | 32 | 829 | 190 | 161 | 854 | 600 | 625 | 240 | 57.5 |
| **BS2F 2 MXH 207** | G 2 | G 1 1/2 | 418 | 32 | - | 190 | 161 | 854 | 600 | 625 | 240 | - |
| **BS2F 2 MXH 208** | G 2 | G 1 1/2 | 442 | 32 | - | 190 | 161 | 854 | 600 | 625 | 240 | - |
| **BS2F 2 MXH 209** | G 2 | G 1 1/2 | 466 | 32 | - | 190 | 161 | 854 | 600 | 625 | 240 | - |
| **BS2F 2 MXH 403/A** | G 2 | G 1 1/2 | 322 | 32 | - | 190 | 161 | 854 | 600 | 625 | 240 | 40.7 |
| **BS2F 2 MXH 404/B** | G 2 | G 1 1/2 | 346 | 32 | - | 190 | 161 | 854 | 600 | 625 | 240 | 46.1 |
| **BS2F 2 MXH 405/C** | G 2 | G 1 1/2 | 370 | 32 | - | 190 | 161 | 854 | 600 | 625 | 240 | 53.4 |
| **BS2F 2 MXH 406/A** | G 2 | G 1 1/2 | 394 | 32 | - | 190 | 161 | 854 | 600 | 625 | 240 | 59.4 |
| **BS2F 2 MXH 407** | G 2 | G 1 1/2 | 418 | 32 | - | 190 | 161 | 854 | 600 | 625 | 240 | - |
| **BS2F 2 MXH 408** | G 2 | G 1 1/2 | 442 | 32 | - | 190 | 161 | 854 | 600 | 625 | 240 | - |
| **BS2F 2 MXH 409** | G 2 | G 1 1/2 | 466 | 32 | - | 190 | 161 | 854 | 600 | 625 | 240 | - |
| **BS2F 2 MXH 803/A** | G 2 1/2 | G 2 | 403 | 40 | - | 196 | 161 | 922 | 600 | 625 | 240 | 55.6 |
| **BS2F 2 MXH 804/A** | G 2 1/2 | G 2 | 433 | 40 | - | 196 | 161 | 922 | 600 | 625 | 240 | 60.5 |
| **BS2F 2 MXH 805/B** | G 2 1/2 | G 2 | 463 | 40 | - | 196 | 161 | 922 | 600 | 625 | 240 | 69 |
| **BS2F 2 MXH 806** | G 2 1/2 | G 2 | 523 | 40 | - | 196 | 161 | 922 | 600 | 625 | 240 | - |
| **BS2F 2 MXH 807** | G 2 1/2 | G 2 | 553 | 40 | - | 196 | 176 | 922 | 600 | 625 | 240 | - |
| **BS2F 2 MXH 808** | G 2 1/2 | G 2 | 553 | 40 | - | 196 | 176 | 922 | 600 | 625 | 240 | - |

Non-binding dimensions to be checked when ordering
Anti-vibration kit supplied disassembled as standard
Missing dimensions on request

# BS. MXH

## Dimensions and weights

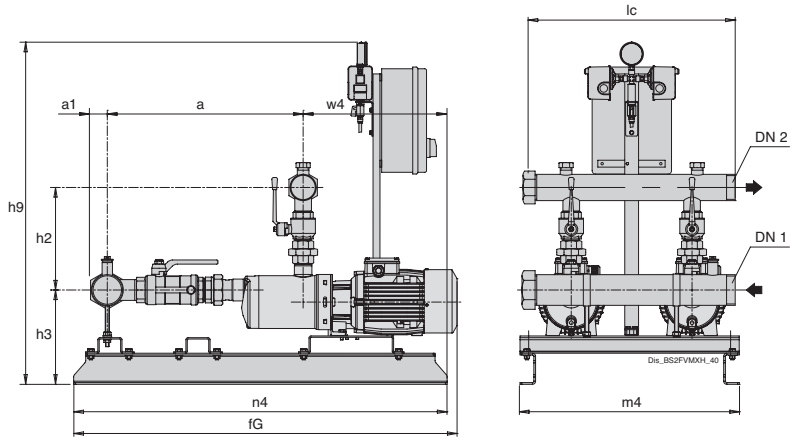


| TYPE | Manifolds | | mm | | | | | | | Kg |
|---|---|---|---|---|---|---|---|---|---|---|
| | DN1 | DN2 | a | h2 | h3 | h9 | lc | m4 | n4 | Weight |
| **BS2F 2 MXH 1602/A** | G 3 | G 2 1/2 | 490 | 281 | 258 | 1040 | 600 | 625 | 1090 | 94.4 |
| **BS2F 2 MXH 1603/B** | G 3 | G 2 1/2 | 490 | 281 | 258 | 1040 | 600 | 625 | 1090 | 101 |
| **BS2F 2 MXH 1604/A** | G 3 | G 2 1/2 | 530 | 281 | 273 | 1040 | 600 | 625 | 1090 | 120.3 |
| **BS2F 2 MXH 1605/B** | G 3 | G 2 1/2 | 565 | 281 | 273 | 1040 | 600 | 625 | 1090 | 127.5 |
| **BS2F 2 MXH 1606/B** | G 3 | G 2 1/2 | 605 | 281 | 273 | 1040 | 600 | 625 | 1090 | 131 |
| **BS2F 2 MXH 2002/A** | G 3 | G 2 1/2 | 484 | 351 | 220 | 1040 | 600 | 625 | 1090 | 107.5 |
| **BS2F 2 MXH 2003** | G 3 | G 2 1/2 | 503 | 351 | 230 | 1040 | 600 | 625 | 1090 | 107.5 |
| **BS2F 2 MXH 2004/A** | G 3 | G 2 1/2 | 537 | 351 | 230 | 1040 | 600 | 625 | 1090 | 134.5 |
| **BS2F 2 MXH 2005** | G 3 | G 2 1/2 | 572 | 351 | 252 | 1040 | 600 | 625 | 1090 | 107.5 |

Non-binding dimensions to be checked when ordering
Missing dimensions on request

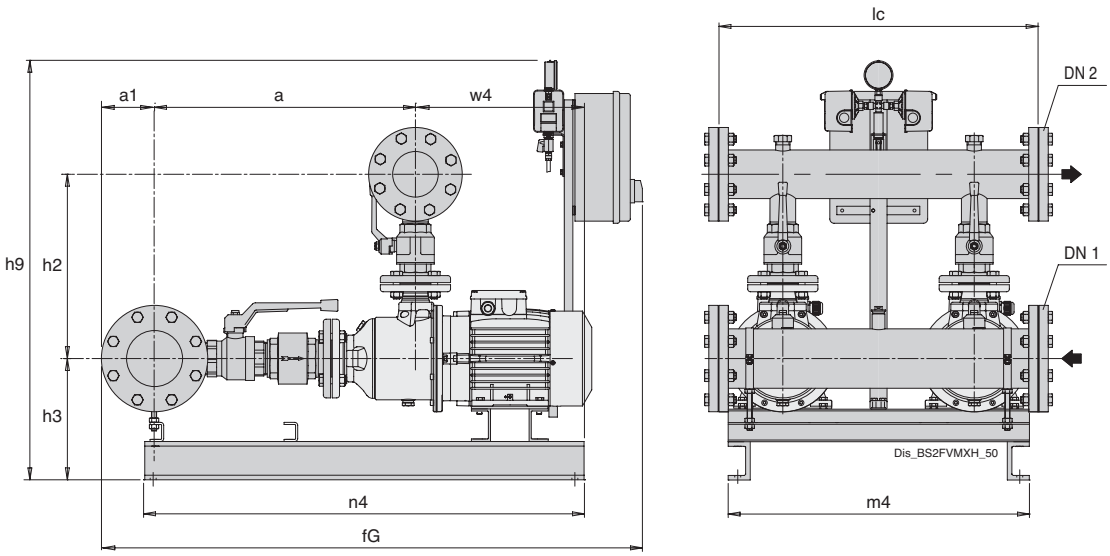


| TYPE | Manifolds | | mm | | | | | | | | | | Kg |
|---|---|---|---|---|---|---|---|---|---|---|---|---|---|
| | DN1 | DN2 | a | fG | h2 | h3 | h9 | l6 | lc | m4 | n4 | w4 | Weight |
| **BS2F 2 MXH-F 3202/B** | 100 | 80 | 558 | 1091 | 402 | 298 | 1510 | 816 | 750 | 750 | 1175 | 393 | - |
| **BS2F 2 MXH-F 3203/A** | 100 | 80 | 604 | 1137 | 402 | 298 | 1510 | 816 | 750 | 750 | 1150 | 393 | 230 |
| **BS2F 2 MXH-F 3204/A** | 100 | 80 | 650 | 1183 | 402 | 298 | 1510 | 816 | 750 | 750 | 1175 | 393 | 277 |
| **BS2F 2 MXH-F 4802/A** | 125 | 100 | 654 | - | 402 | 298 | 1510 | 816 | 750 | 750 | 1175 | 408 | 107.5 |
| **BS2F 2 MXH-F 4803/A** | 125 | 100 | 716 | - | 402 | 298 | 1510 | 816 | 750 | 750 | 1220 | 408 | 230 |

Non-binding dimensions to be checked when ordering
Missing dimensions on request

# BS. MXH

## Dimensions and weights

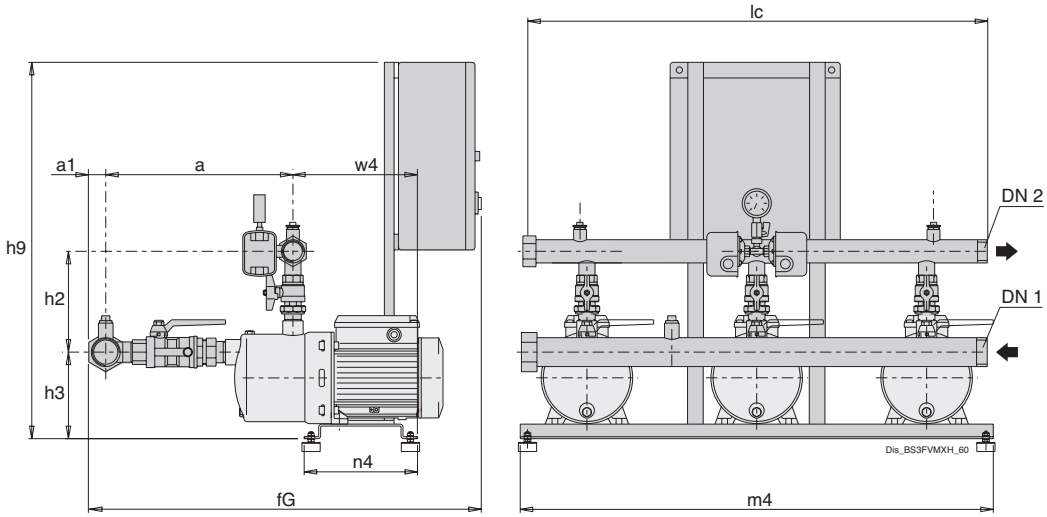


| TYPE | Manifolds | | mm | | | | | | | | | Kg |
|---|---|---|---|---|---|---|---|---|---|---|---|---|
| | DN1 | DN2 | a | a1 | fG | h2 | h3 | h9 | lc | m4 | n4 | Weight |
| BS3F 3 MXH 203E | G 2 1/2 | G 2 | 330 | 40 | 838 | 196 | 177 | 840 | 950 | 1000 | 305 | - |
| BS3F 3 MXH 204/A | G 2 1/2 | G 2 | 354 | 40 | 862 | 196 | 177 | 840 | 950 | 1000 | 305 | - |
| BS3F 3 MXH 205/B | G 2 1/2 | G 2 | 378 | 40 | 886 | 196 | 177 | 840 | 950 | 1000 | 305 | 76.8 |
| BS3F 3 MXH 206/C | G 2 1/2 | G 2 | 402 | 40 | 910 | 196 | 177 | 840 | 950 | 1000 | 305 | - |
| BS3F 3 MXH 207 | G 2 1/2 | G 2 | 426 | 40 | 934 | 196 | 177 | - | 950 | 1000 | 305 | - |
| BS3F 3 MXH 208 | G 2 1/2 | G 2 | 450 | 40 | 958 | 196 | 177 | - | 950 | 1000 | 305 | - |
| BS3F 3 MXH 209 | G 2 1/2 | G 2 | 474 | 40 | 982 | 196 | 177 | - | 950 | 1000 | 305 | - |
| BS3F 3 MXH 403/A | G 2 1/2 | G 2 | 330 | 40 | 838 | 196 | 177 | 840 | 950 | 1000 | 305 | - |
| BS3F 3 MXH 404/B | G 2 1/2 | G 2 | 354 | 40 | 862 | 196 | 177 | 840 | 950 | 1000 | 305 | - |
| BS3F 3 MXH 405/C | G 2 1/2 | G 2 | 378 | 40 | 886 | 196 | 177 | 840 | 950 | 1000 | 305 | 96 |
| BS3F 3 MXH 406/A | G 2 1/2 | G 2 | 402 | 40 | 910 | 196 | 177 | 840 | 950 | 1000 | 305 | 102.5 |
| BS3F 3 MXH 407 | G 2 1/2 | G 2 | 426 | 40 | 934 | 196 | 177 | - | 950 | 1000 | 305 | - |
| BS3F 3 MXH 408 | G 2 1/2 | G 2 | 450 | 40 | 958 | 196 | 177 | - | 950 | 1000 | 305 | - |
| BS3F 3 MXH 409 | G 2 1/2 | G 2 | 474 | 40 | 982 | 196 | 177 | - | 950 | 1000 | 305 | - |
| BS3F 3 MXH 803/A | G 3 | G 2 1/2 | 409 | 48 | 925 | 219 | 177 | 840 | 950 | 1000 | 305 | 111.5 |
| BS3F 3 MXH 804/A | G 3 | G 2 1/2 | 439 | 48 | 955 | 219 | 177 | 840 | 950 | 1000 | 305 | - |
| BS3F 3 MXH 805/B | G 3 | G 2 1/2 | 469 | 48 | 985 | 219 | 177 | 840 | 950 | 1000 | 305 | - |
| BS3F 3 MXH 806 | G 3 | G 2 1/2 | 499 | 48 | 1015 | 219 | 177 | - | 950 | 1000 | 305 | - |
| BS3F 3 MXH 807 | G 3 | G 2 1/2 | 529 | 48 | 1057 | 219 | 192 | - | 950 | 1000 | 305 | - |
| BS3F 3 MXH 808 | G 3 | G 2 1/2 | 559 | 48 | 1087 | 219 | 192 | - | 950 | 1000 | 305 | - |

Non-binding dimensions to be checked when ordering
Anti-vibration kit supplied disassembled as standard

# BS. MXH

## Dimensions and weights

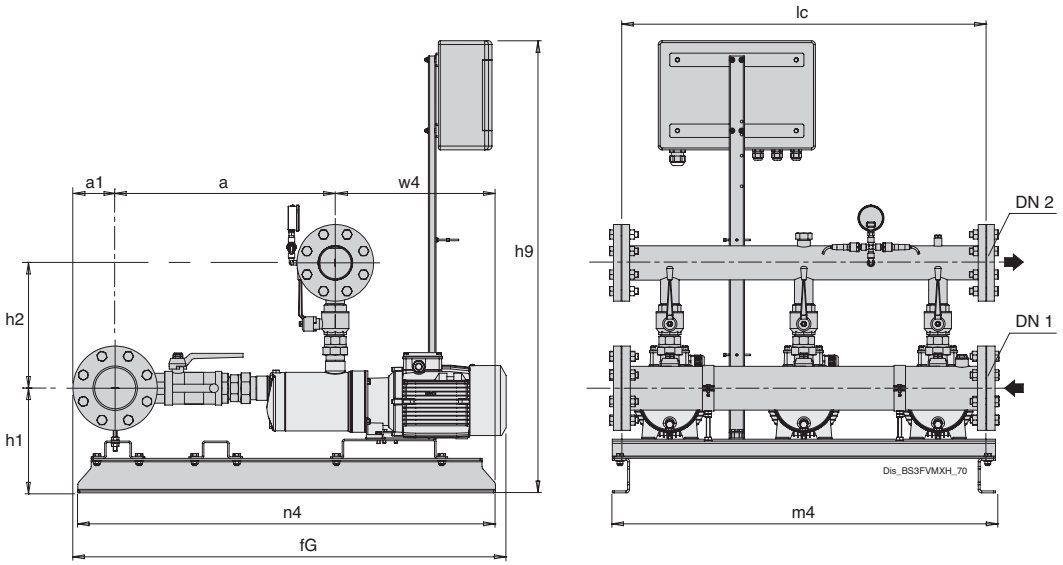


| TYPE | Manifolds | | mm | | | | | | | | Kg |
|---|---|---|---|---|---|---|---|---|---|---|---|
| | DN1 | DN2 | a | a1 | h1 | h2 | h9 | lc | m4 | n4 | Weight |
| BS3F 3 MXH 1602/A | 100 | 80 | 500 | 110 | 258 | 327 | 1060 | 950 | 1000 | 1090 | - |
| BS3F 3 MXH 1603/B | 100 | 80 | 500 | 110 | 258 | 327 | 1060 | 950 | 1000 | 1090 | - |
| BS3F 3 MXH 1604/A | 100 | 80 | 538 | 110 | 273 | 327 | 1060 | 950 | 1000 | 1090 | - |
| BS3F 3 MXH 1605/B | 100 | 80 | 575 | 110 | 273 | 327 | 1060 | 950 | 1000 | 1090 | - |
| BS3F 3 MXH 1606/B | 100 | 80 | 613 | 110 | 273 | 327 | 1060 | 950 | 1000 | 1090 | 228.5 |
| BS3F 3 MXH 2002/A | 100 | 80 | 499 | 110 | 290 | 398 | 1060 | 950 | 1000 | 1090 | - |
| BS3F 3 MXH 2003 | 100 | 80 | 518 | 110 | 290 | 398 | 1060 | 950 | 1000 | 1090 | - |
| BS3F 3 MXH 2004/A | 100 | 80 | 553 | 110 | 290 | 398 | 1060 | 950 | 1000 | 1090 | - |
| BS3F 3 MXH 2005 | 100 | 80 | 587 | 110 | 252 | 398 | 1060 | 950 | 1000 | 1090 | - |

Non-binding dimensions to be checked when ordering

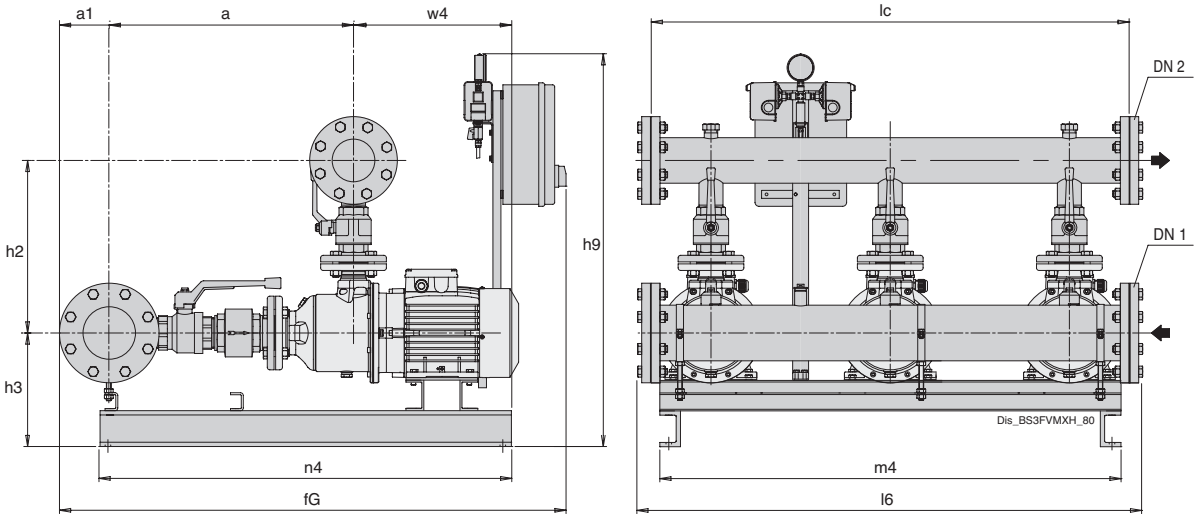


| TYPE | Manifolds | | mm | | | | | | | |
|---|---|---|---|---|---|---|---|---|---|---|
| | DN1 | DN2 | a | a1 | h2 | h3 | h9 | lc | m4 | n4 |
| BS3F 3 MXH-F 3202/B | 125 | 100 | 565 | 125 | 415 | 318 | 1510 | 1200 | 1150 | 1175 |
| BS3F 3 MXH-F 3203/B | 125 | 100 | 617 | 125 | 415 | 318 | 1510 | 1200 | 1150 | 1060 |
| BS3F 3 MXH-F 3204/A | 125 | 100 | 660 | 125 | 415 | 318 | 1510 | 1200 | 1150 | 1175 |
| BS3F 3 MXH-F 4802/A | 150 | 125 | 665 | 142.5 | 465 | 318 | 1510 | 1200 | 1150 | 1175 |
| BS3F 3 MXH-F 4803/A | 150 | 125 | 725 | 142.5 | 465 | 318 | 1510 | 1200 | 1150 | 1220 |

Non-binding dimensions to be checked when ordering

# BS. MXH

## Dimensions and weights

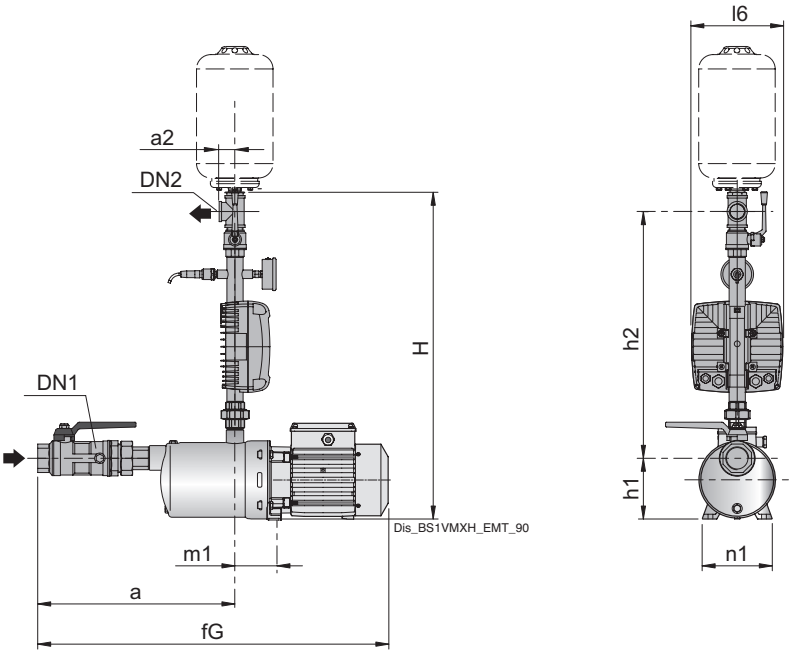


| TYPE | Manifolds | | mm | | | | | | | | Kg |
|---|---|---|---|---|---|---|---|---|---|---|---|
| | DN1 | DN2 | a | fG | H | h1 | h2 | l6 | m1 | n1 | Weight |
| BSM1V 1 MXH 203E-EMT | G 1 1/4 | G 1 | 277 | 513 | 669 | 126 | 503 | 190 | 88 | 146 | 14 |
| BSM1V 1 MXH 204/A-EMT | G 1 1/4 | G 1 | 301 | 563 | 669 | 126 | 503 | 190 | 88 | 146 | 16.8 |
| BSM1V 1 MXH 205/B-EMT | G 1 1/4 | G 1 | 325 | 587 | 669 | 126 | 503 | 190 | 88 | 146 | 18.3 |
| BSM1V 1 MXH 206/C-EMT | G 1 1/4 | G 1 | 349 | 671 | 669 | 126 | 503 | 190 | 88 | 146 | 23.9 |
| BSM1V 1 MXH 207-EMT | G 1 1/4 | G 1 | 373 | 695 | 669 | 126 | 503 | 190 | - | 146 | - |
| BSM1V 1 MXH 208-EMT | G 1 1/4 | G 1 | 397 | 719 | 669 | 126 | 503 | 190 | - | 146 | - |
| BSM1V 1 MXH 209-EMT | G 1 1/4 | G 1 | 421 | 743 | 669 | 126 | 503 | 190 | - | 146 | - |
| BSM1V 1 MXH 403/A-EMT | G 1 1/4 | G 1 | 277 | 539 | 669 | 126 | 503 | 190 | 88 | 146 | 16.1 |
| BSM1V 1 MXH 404/B-EMT | G 1 1/4 | G 1 | 301 | 563 | 669 | 126 | 503 | 190 | 88 | 146 | 19 |
| BSM1V 1 MXH 405/C-EMT | G 1 1/4 | G 1 | 325 | 647 | 669 | 126 | 503 | 190 | 88 | 146 | 22.1 |
| BSM1V 1 MXH 406/A-EMT | G 1 1/4 | G 1 | 349 | 671 | 669 | 126 | 503 | 190 | 88 | 146 | 25.4 |
| BSM1V 1 MXH 407-EMT | G 1 1/4 | G 1 | 373 | 695 | 669 | 126 | 503 | 190 | - | 146 | - |
| BSM1V 1 MXH 408-EMT | G 1 1/4 | G 1 | 397 | 759 | 669 | 126 | 503 | 190 | - | 146 | - |
| BSM1V 1 MXH 803/A-EMT | G 1 1/2 | G 1 | 340 | 663 | 669 | 126 | 503 | 190 | 88 | 146 | 23.3 |
| BSM1V 1 MXH 804/A-EMT | G 1 1/2 | G 1 | 370 | 693 | 669 | 126 | 503 | 190 | 88 | 146 | 25.1 |
| BSM1V 1 MXH 805/B-EMT | G 1 1/2 | G 1 | 400 | 763 | 669 | 126 | 503 | 190 | 88 | 146 | - |
| BSM1V 1 MXH 1603/B-EMT | G 2 | G 1 1/2 | 404 | 752 | 750 | 117 | 560 | 165 | 101 | 146 | 32.8 |

Non-binding dimensions to be checked when ordering

| TYPE | Manifolds | | mm | | | | | | | | Kg |
|---|---|---|---|---|---|---|---|---|---|---|---|
| | DN1 | DN2 | a | fG | H | h1 | h2 | l6 | m1 | n1 | Weight |
| BSM1V 1 MXHM 203E-EMM | G 1 1/4 | G 1 | 277 | 513 | 669 | 126 | 503 | 190 | 88 | 146 | 14 |
| BSM1V 1 MXHM 204/A-EMM | G 1 1/4 | G 1 | 301 | 563 | 669 | 126 | 503 | 190 | 88 | 146 | 17.6 |
| BSM1V 1 MXHM 205/A-EMM | G 1 1/4 | G 1 | 322 | 585 | 669 | 127 | 516 | 165 | 88 | 146 | 18.8 |
| BSM1V 1 MXHM 206-EMM | G 1 1/4 | G 1 | 349 | 671 | 669 | 126 | 503 | 190 | 88 | 146 | 24 |
| BSM1V 1 MXHM 207-EMM | G 1 1/4 | G 1 | 373 | 695 | 669 | 126 | 503 | 190 | 88 | 146 | - |
| BSM1V 1 MXHM 403/A-EMM | G 1 1/4 | G 1 | 277 | 539 | 669 | 126 | 503 | 190 | 88 | 146 | 16.6 |
| BSM1V 1 MXHM 404/A-EMM | G 1 1/4 | G 1 | 301 | 563 | 669 | 126 | 503 | 190 | 88 | 146 | 19 |
| BSM1V 1 MXHM 405-EMM | G 1 1/4 | G 1 | 325 | 647 | 669 | 126 | 503 | 190 | 88 | 146 | 24.3 |
| BSM1V 1 MXHM 803-EMM | G 1 1/2 | G 1 | 340 | 663 | 669 | 126 | 503 | 190 | 88 | 146 | 24 |

Non-binding dimensions to be checked when ordering

# BS. MXH

## Dimensions and weights

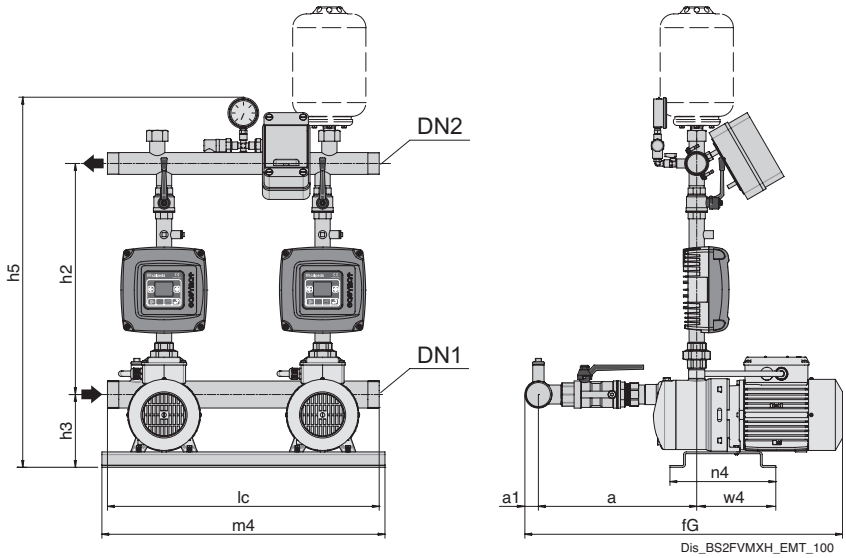


| TYPE | Manifolds | | mm | | | | | | | | | | Kg |
|---|---|---|---|---|---|---|---|---|---|---|---|---|---|
| | DN1 | DN2 | a | a1 | fG | h2 | h3 | h5 | lc | m4 | n4 | w4 | Weight |
| **BSM2V 2 MXH 203E-EMT** | G 2 | G 1 1/2 | 322 | 32 | 616 | 489 | 160 | 804 | 600 | 625 | 240 | 213 | 37 |
| **BSM2V 2 MXH 204/A-EMT** | G 2 | G 1 1/2 | 346 | 32 | 640 | 489 | 160 | 804 | 600 | 625 | 240 | 213 | 43.1 |
| **BSM2V 2 MXH 205/B-EMT** | G 2 | G 1 1/2 | 370 | 32 | 664 | 489 | 160 | 804 | 600 | 625 | 240 | 213 | 49 |
| **BSM2V 2 MXH 206/C-EMT** | G 2 | G 1 1/2 | 394 | 32 | 748 | 489 | 160 | 804 | 600 | 625 | 240 | 213 | 56.5 |
| **BSM2V 2 MXH 207-EMT** | G 2 | G 1 1/2 | 418 | 32 | 772 | 489 | 160 | 804 | 600 | 625 | 240 | 213 | - |
| **BSM2V 2 MXH 208-EMT** | G 2 | G 1 1/2 | 442 | 32 | 796 | 489 | 160 | 804 | 600 | 625 | 240 | 213 | - |
| **BSM2V 2 MXH 209-EMT** | G 2 | G 1 1/2 | 466 | 32 | 820 | 489 | 160 | 804 | 600 | 625 | 240 | 213 | - |
| **BSM2V 2 MXH 403/A-EMT** | G 2 | G 1 1/2 | 322 | 32 | 616 | 489 | 160 | 804 | 600 | 625 | 240 | 213 | 42 |
| **BSM2V 2 MXH 404/B-EMT** | G 2 | G 1 1/2 | 346 | 32 | 640 | 489 | 160 | 804 | 600 | 625 | 240 | 213 | 44.2 |
| **BSM2V 2 MXH 405/C-EMT** | G 2 | G 1 1/2 | 370 | 32 | 724 | 489 | 160 | 804 | 600 | 625 | 240 | 213 | 54.1 |
| **BSM2V 2 MXH 406/A-EMT** | G 2 | G 1 1/2 | 394 | 32 | 748 | 489 | 160 | 804 | 600 | 625 | 240 | 213 | 61 |
| **BSM2V 2 MXH 407-EMT** | G 2 | G 1 1/2 | 418 | 32 | 772 | 489 | 160 | 804 | 600 | 625 | 240 | 213 | - |
| **BSM2V 2 MXH 408-EMT** | G 2 | G 1 1/2 | 442 | 32 | 836 | 489 | 160 | 804 | 600 | 625 | 240 | 213 | - |
| **BSM2V 2 MXH 803/A-EMT** | G 2 1/2 | G 2 | 403 | 40 | 766 | 495 | 160 | 810 | 600 | 625 | 240 | - | 55.8 |
| **BSM2V 2 MXH 804/A-EMT** | G 2 1/2 | G 2 | 433 | 40 | 796 | 495 | 160 | 810 | 600 | 625 | 240 | - | 62.7 |
| **BSM2V 2 MXH 805/B-EMT** | G 2 1/2 | G 2 | 463 | 40 | 866 | 495 | 160 | 810 | 600 | 625 | 240 | - | 68.7 |
| **BSM2V 2 MXH 1603/B-EMT** | G 3 | G 2 1/2 | 490 | - | 1090 | 563 | 258 | 975 | 600 | 625 | 1090 | 478 | 102.5 |

Non-binding dimensions to be checked when ordering

# BS. MXH

calpeda

## Dimensions and weights

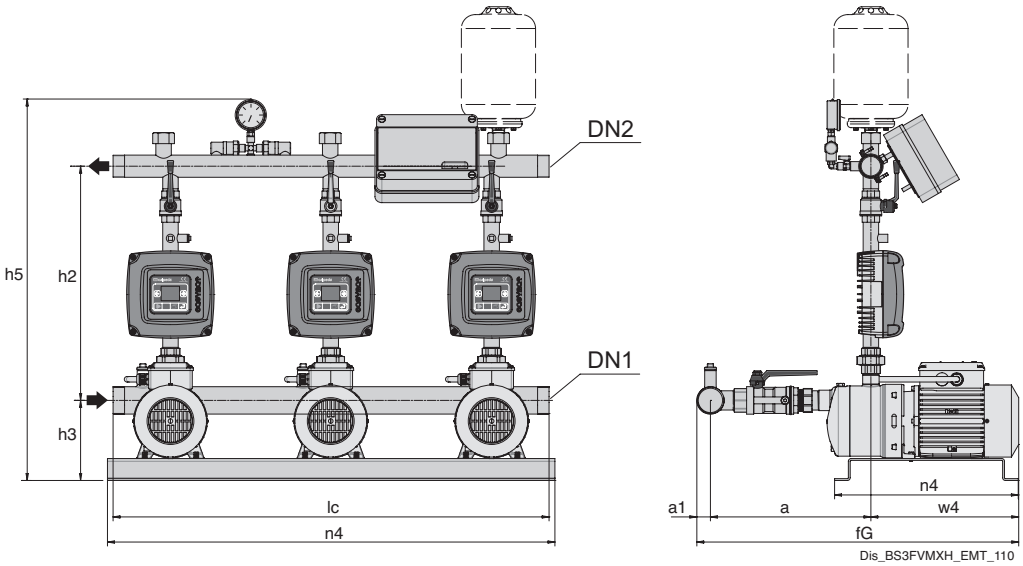


| TYPE | Manifolds | | mm | | | | | | | | Kg |
|---|---|---|---|---|---|---|---|---|---|---|---|
| | DN1 | DN2 | a | a1 | h2 | h3 | h5 | lc | m4 | n4 | Weight |
| **BSM3V 3 MXH 203E-EMT** | G 2 1/2 | G 2 | 330 | 40 | 495 | 177 | 827 | 950 | 1000 | 305 | 62.1 |
| **BSM3V 3 MXH 204/A-EMT** | G 2 1/2 | G 2 | 354 | 40 | 495 | 177 | 827 | 950 | 1000 | 305 | 70.2 |
| **BSM3V 3 MXH 205/B-EMT** | G 2 1/2 | G 2 | 378 | 40 | 495 | 177 | 827 | 950 | 1000 | 305 | 77.6 |
| **BSM3V 3 MXH 206/C-EMT** | G 2 1/2 | G 2 | 402 | 40 | 495 | 177 | 827 | 950 | 1000 | 305 | - |
| **BSM3V 3 MXH 207-EMT** | G 2 1/2 | G 2 | 426 | 40 | 495 | 177 | 827 | 950 | 1000 | 305 | - |
| **BSM3V 3 MXH 208-EMT** | G 2 1/2 | G 2 | 450 | 40 | 495 | 177 | 827 | 950 | 1000 | 305 | - |
| **BSM3V 3 MXH 209-EMT** | G 2 1/2 | G 2 | 474 | 40 | 495 | 177 | 827 | 950 | 1000 | 305 | - |
| **BSM3V 3 MXH 403/A-EMT** | G 2 1/2 | G 2 | 330 | 40 | 495 | 177 | 827 | 950 | 1000 | 305 | 67.8 |
| **BSM3V 3 MXH 404/B-EMT** | G 2 1/2 | G 2 | 354 | 40 | 495 | 177 | 827 | 950 | 1000 | 305 | 78.7 |
| **BSM3V 3 MXH 405/C-EMT** | G 2 1/2 | G 2 | 378 | 40 | 495 | 177 | 827 | 950 | 1000 | 305 | 89.5 |
| **BSM3V 3 MXH 406/A-EMT** | G 2 1/2 | G 2 | 402 | 40 | 495 | 177 | 827 | 950 | 1000 | 305 | - |
| **BSM3V 3 MXH 407-EMT** | G 2 1/2 | G 2 | 426 | 40 | 495 | 177 | 827 | 950 | 1000 | 305 | - |
| **BSM3V 3 MXH 408-EMT** | G 2 1/2 | G 2 | 450 | 40 | 495 | 177 | 827 | 950 | 1000 | 305 | - |
| **BSM3V 3 MXH 803/A-EMT** | G 3 | G 2 1/2 | 409 | 48 | 518 | 177 | 850 | 950 | 1000 | 305 | 92.3 |
| **BSM3V 3 MXH 804/A-EMT** | G 3 | G 2 1/2 | 439 | 48 | 518 | 177 | 850 | 950 | 1000 | 305 | 101 |
| **BSM3V 3 MXH 805/B-EMT** | G 3 | G 2 1/2 | 469 | 48 | 518 | 177 | 850 | 950 | 1000 | 305 | 115 |
| **BSM3V 3 MXH 1603/B-EMT** | 100 | 80 | 498 | 110 | 609 | 258 | 1136 | 1000 | 1000 | 1090 | 189 |

Non-binding dimensions to be checked when ordering

# BS. MXH

## Dimensions and weights

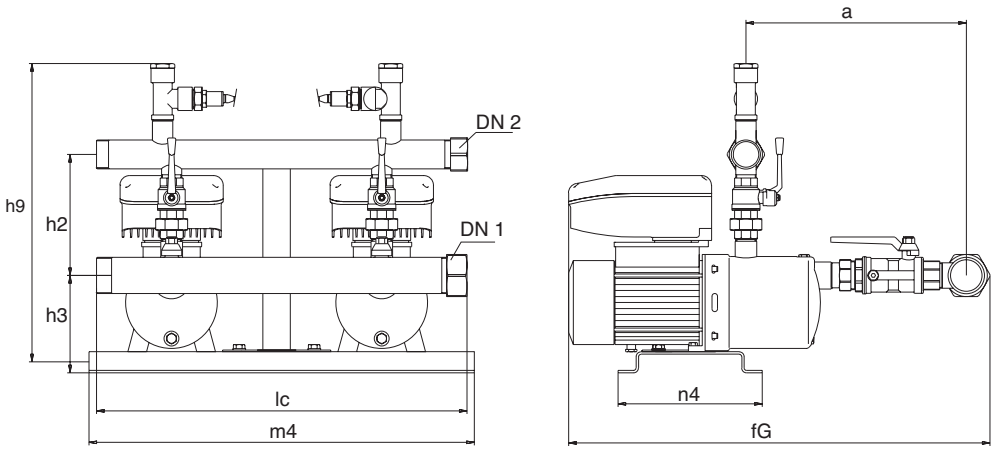


| TYPE | Manifolds | | mm | | | | | | | | Kg |
|---|---|---|---|---|---|---|---|---|---|---|---|
| | DN1 | DN2 | a | fG | h1 | h2 | h9 | lc | m4 | n4 | Weight |
| **BSM2V 2 MXH 203E-EMT2** | G 2 | G 1 1/2 | 343 | 656 | 161 | 242 | 543 | 600 | 625 | 240 | - |
| **BSM2V 2 MXH 204/A-EMT2** | G 2 | G 1 1/2 | 367 | 647 | 161 | 242 | 543 | 600 | 625 | 240 | - |
| **BSM2V 2 MXH 205/B-EMT2** | G 2 | G 1 1/2 | 391 | 671 | 161 | 242 | 543 | 600 | 625 | 240 | - |
| **BSM2V 2 MXH 206/C-EMT2** | G 2 | G 1 1/2 | 415 | 790 | 161 | 242 | 543 | 600 | 625 | 240 | - |
| **BSM2V 2 MXH 403/A-EMT2** | G 2 | G 1 1/2 | 367 | 671 | 161 | 242 | 543 | 600 | 625 | 240 | - |
| **BSM2V 2 MXH 404/B-EMT2** | G 2 | G 1 1/2 | 367 | 671 | 161 | 242 | 543 | 600 | 625 | 240 | - |
| **BSM2V 2 MXH 405/C-EMT2** | G 2 | G 1 1/2 | 391 | 766 | 161 | 242 | 543 | 600 | 625 | 240 | 58 |
| **BSM2V 2 MXH 406/A-EMT2** | G 2 | G 1 1/2 | 415 | 790 | 161 | 242 | 543 | 600 | 625 | 240 | 76 |
| **BSM2V 2 MXH 803/A-EMT2** | G 2 1/2 | G 2 | 430 | 797 | 162 | 252 | 564 | 600 | 625 | 240 | - |
| **BSM2V 2 MXH 804/A-EMT2** | G 2 1/2 | G 2 | 460 | 827 | 162 | 252 | 564 | 600 | 625 | 240 | 100 |
| **BSM2V 2 MXH 805/B-EMT2** | G 2 1/2 | G 2 | 460 | 897 | 162 | 252 | 564 | 600 | 625 | 365 | - |

Non-binding dimensions to be checked when ordering

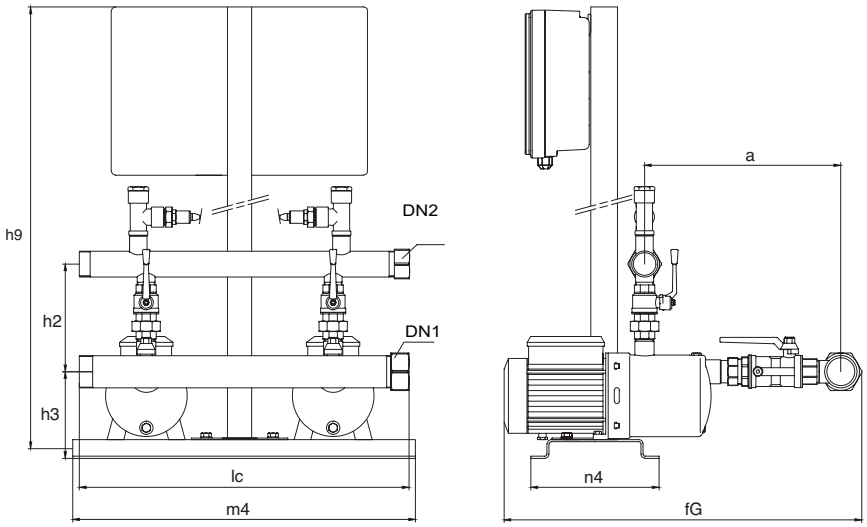


| TYPE | Manifolds | | mm | | | | | | | |
|---|---|---|---|---|---|---|---|---|---|---|
| | DN1 | DN2 | a | fG | h2 | h3 | h9 | lc | m4 | n4 |
| **BS2V 2 MXH 405-WALL** | G 2 | G 1 1/2 | 391 | 766 | 242 | 161 | 1034 | 600 | 625 | 240 |
| **BS2V 2 MXH 406-WALL** | G 2 | G 1 1/2 | 415 | 790 | 242 | 161 | 1034 | 600 | 625 | 240 |
| **BS2V 2 MXH 805-WALL** | G 2 1/2 | G 2 | 460 | 897 | 252 | 171 | 1034 | 600 | 625 | 365 |

Non-binding dimensions to be checked when ordering

# BS. MXH

## Dimensions and weights

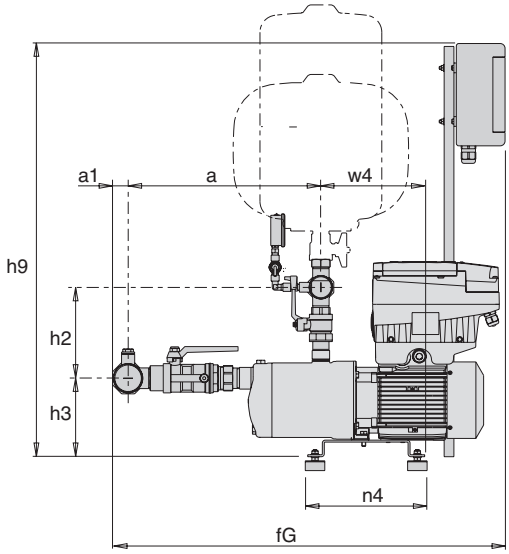


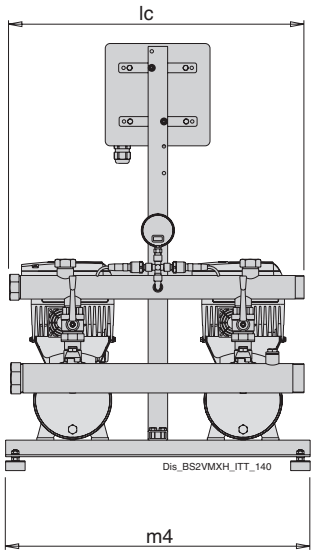


| TYPE | Manifolds | | mm | | | | | | | | | | Kg |
|---|---|---|---|---|---|---|---|---|---|---|---|---|---|
| | DN1 | DN2 | a | a1 | fG | h2 | h3 | h9 | lc | m4 | n4 | w4 | Weight |
| **BS2V 2 MXH 204/A-ITT** | G 2 | G 1 1/2 | 346 | 32 | 796 | 190 | 161 | 874 | 600 | 625 | 240 | 213 | 53.2 |
| **BS2V 2 MXH 205/B-ITT** | G 2 | G 1 1/2 | 370 | 32 | 820 | 190 | 161 | 874 | 600 | 625 | 240 | 213 | 59.4 |
| **BS2V 2 MXH 206/C-ITT** | G 2 | G 1 1/2 | 394 | 32 | 844 | 190 | 161 | 874 | 600 | 625 | 240 | 213 | 67.7 |
| **BS2V 2 MXH 207C-ITT** | G 2 | G 1 1/2 | 418 | 32.01 | 868 | 190 | 161 | 874 | 600 | 625 | 240 | 213 | - |
| **BS2V 2 MXH 208-ITT** | G 2 | G 1 1/2 | 442 | 32.02 | 892 | 190 | 161 | 874 | 600 | 625 | 240 | 213 | - |
| **BS2V 2 MXH 209-ITT** | G 2 | G 1 1/2 | 466 | 32.03 | 916 | 190 | 161 | 874 | 600 | 625 | 240 | 213 | - |
| **BS2V 2 MXH 403/A-ITT** | G 2 | G 1 1/2 | 322 | 32 | 772 | 190 | 161 | 874 | 600 | 625 | 240 | 213 | 52 |
| **BS2V 2 MXH 404/B-ITT** | G 2 | G 1 1/2 | 346 | 32 | 796 | 190 | 161 | 874 | 600 | 625 | 240 | 213 | 56.7 |
| **BS2V 2 MXH 405/C-ITT** | G 2 | G 1 1/2 | 370 | 32 | 820 | 190 | 161 | 874 | 600 | 625 | 240 | 213 | 66.2 |
| **BS2V 2 MXH 406/A-ITT** | G 2 | G 1 1/2 | 394 | 32 | 844 | 190 | 161 | 874 | 600 | 625 | 240 | 213 | 69.7 |
| **BS2V 2 MXH 407-ITT** | G 2 | G 1 1/2 | 418 | 32 | 868 | 190 | 161 | 874 | 600 | 625 | 240 | 213 | - |
| **BS2V 2 MXH 408-ITT** | G 2 | G 1 1/2 | 442 | 32 | 892 | 190 | 161 | 874 | 600 | 625 | 240 | 213 | - |
| **BS2V 2 MXH 409-ITT** | G 2 | G 1 1/2 | 466 | 32 | 916 | 190 | 161 | 874 | 600 | 625 | 240 | 213 | - |
| **BS2V 2 MXH 803/A-ITT** | G 2 1/2 | G 2 | 403 | 40 | 861 | 196 | 161 | 874 | 600 | 625 | 240 | 213 | 67.4 |
| **BS2V 2 MXH 804/A-ITT** | G 2 1/2 | G 2 | 433 | 40 | 891 | 196 | 161 | 874 | 600 | 625 | 240 | 213 | 72.3 |
| **BS2V 2 MXH 805/B-ITT** | G 2 1/2 | G 2 | 463 | 40 | 921 | 196 | 161 | 874 | 600 | 625 | 240 | 213 | 80 |
| **BS2V 2 MXH 806-ITT** | G 2 1/2 | G 2 | 493 | 40 | 951 | 196 | 161 | 874 | 600 | 625 | 240 | 213 | - |
| **BS2V 2 MXH 807-ITT** | G 2 1/2 | G 2 | 523 | 40 | 993 | 196 | 176 | 874 | 600 | 625 | 240 | 213 | - |
| **BS2V 2 MXH 808-ITT** | G 2 1/2 | G 2 | 553 | 40 | 1023 | 196 | 176 | 874 | 600 | 625 | 240 | 213 | - |

Non-binding dimensions to be checked when ordering
Anti-vibration kit supplied disassembled as standard

# BS. MXH

## Dimensions and weights

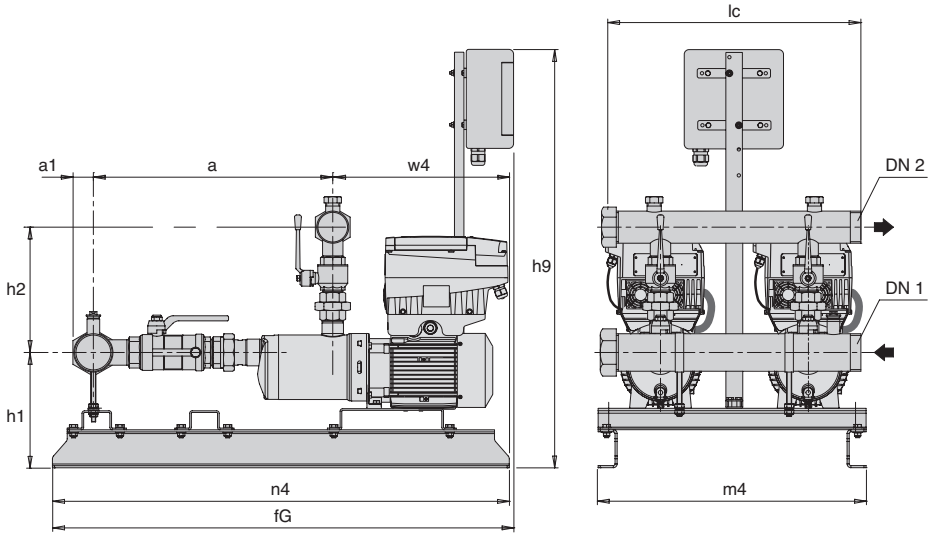


| TYPE | Manifolds | | mm | | | | | | | | | | Kg |
|---|---|---|---|---|---|---|---|---|---|---|---|---|---|
| | DN1 | DN2 | a | a1 | fG | h1 | h2 | h9 | lc | m4 | n4 | w4 | Weight |
| **BS2V 2 MXH 1603/B-ITT** | G 3 | G 2 1/2 | 490 | 48 | 1090 | 258 | 283 | 980 | 600 | 625 | 1090 | 478 | 110 |
| **BS2V 2 MXH 1604/A-ITT** | G 3 | G 2 1/2 | 530 | 48 | 1100 | 273 | 273 | 980 | 600 | 625 | 1090 | - | 133 |
| **BS2V 2 MXH 1605/B-ITT** | G 3 | G 2 1/2 | 565 | 48 | 1133 | 273 | 273 | 980 | 600 | 625 | 1090 | - | 141.7 |
| **BS2V 2 MXH 1606/B-ITT** | G 3 | G 2 1/2 | 605 | 48 | 1192 | 273 | 273 | 980 | 600 | 625 | 1090 | - | 143 |
| **BS2V 2 MXH 2002/A-ITT** | G 3 | G 2 1/2 | 484 | 48 | 1170 | 290 | 220 | 980 | 600 | 625 | 1090 | - | - |
| **BS2V 2 MXH 2003-ITT** | G 3 | G 2 1/2 | 503 | 48 | 1170 | 290 | 230 | 980 | 600 | 625 | 1090 | - | 138.5 |
| **BS2V 2 MXH 2004/A-ITT** | G 3 | G 2 1/2 | 537 | 48 | 1195 | 290 | 230 | 980 | 600 | 625 | 1090 | - | 147.3 |
| **BS2V 2 MXH 2005-ITT** | G 3 | G 2 1/2 | 572 | 48 | 1245 | 252 | 252 | 980 | 600 | 625 | 1090 | - | 173 |

Non-binding dimensions to be checked when ordering

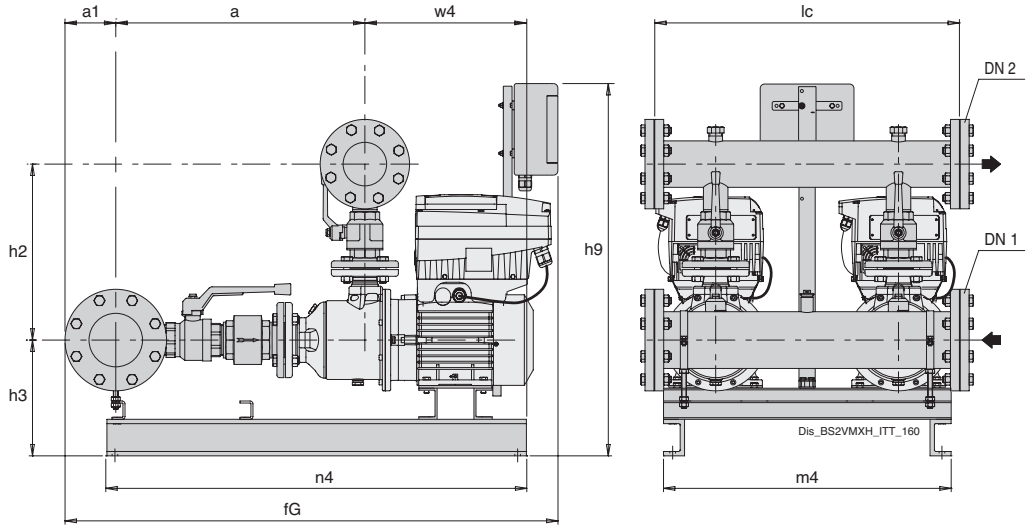


| TYPE | Manifolds | | mm | | | | | | | | | Kg |
|---|---|---|---|---|---|---|---|---|---|---|---|---|
| | DN1 | DN2 | a | a1 | fG | h2 | h3 | h9 | lc | m4 | n4 | Weight |
| **BS2V 2 MXH-F 3202/B-ITT** | 100 | 80 | 558 | 110 | 1180 | 402 | 298 | 1225 | 750 | 750 | 1010 | 224.8 |
| **BS2V 2 MXH-F 3203/A-ITT** | 100 | 80 | 604 | 110 | 1274 | 402 | 298 | 1225 | 750 | 750 | 1050 | 244 |
| **BS2V 2 MXH-F 3204/A-ITT** | 100 | 80 | 650 | 110 | 1320 | 402 | 298 | 1225 | 750 | 750 | 1110 | - |
| **BS2V 2 MXH-F 4802/A-ITT** | 125 | 100 | 654 | 125 | 1306 | 468 | 298 | 1225 | 750 | 750 | 1065 | - |
| **BS2V 2 MXH-F 4803/A-ITT** | 125 | 100 | 716 | 125 | 1367 | 468 | 298 | 1225 | 750 | 750 | 1110 | - |

Non-binding dimensions to be checked when ordering

# BS. MXH

## Dimensions and weights

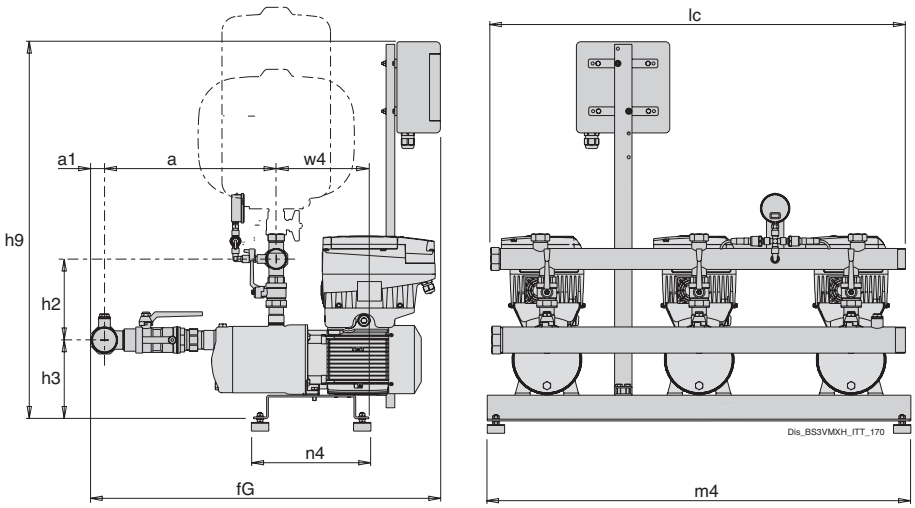


| TYPE | Manifolds | | mm | | | | | | | | | Kg |
|---|---|---|---|---|---|---|---|---|---|---|---|---|
| | DN1 | DN2 | a | a1 | fG | h2 | h3 | h9 | lc | m4 | n4 | Weight |
| **BS3V 3 MXH 204/A-ITT** | G 2 1/2 | G 2 | 354 | 40 | 867 | 196 | 177 | 890 | 950 | 1000 | 305 | - |
| **BS3V 3 MXH 205/B-ITT** | G 2 1/2 | G 2 | 378 | 40 | 891 | 196 | 177 | 890 | 950 | 1000 | 305 | - |
| **BS3V 3 MXH 206/C-ITT** | G 2 1/2 | G 2 | 402 | 40 | 915 | 196 | 177 | 890 | 950 | 1000 | 305 | 106 |
| **BS3V 3 MXH 207-ITT** | G 2 1/2 | G 2 | 426 | 40 | 939 | 196 | 177 | 890 | 950 | 1000 | 305 | - |
| **BS3V 3 MXH 208-ITT** | G 2 1/2 | G 2 | 450 | 40 | 963 | 196 | 177 | 890 | 950 | 1000 | 305 | - |
| **BS3V 3 MXH 209-ITT** | G 2 1/2 | G 2 | 474 | 40 | 987 | 196 | 177 | 890 | 950 | 1000 | 305 | - |
| **BS3V 3 MXH 403/A-ITT** | G 2 1/2 | G 2 | 330 | 40 | 843 | 196 | 192 | 890 | 950 | 1000 | 305 | - |
| **BS3V 3 MXH 404/B-ITT** | G 2 1/2 | G 2 | 354 | 40 | 867 | 196 | 177 | 890 | 950 | 1000 | 305 | - |
| **BS3V 3 MXH 405/C-ITT** | G 2 1/2 | G 2 | 378 | 40 | 891 | 196 | 177 | 890 | 950 | 1000 | 305 | 101.4 |
| **BS3V 3 MXH 406/A-ITT** | G 2 1/2 | G 2 | 402 | 40 | 915 | 196 | 177 | 890 | 950 | 1000 | 305 | - |
| **BS3V 3 MXH 407-ITT** | G 2 1/2 | G 2 | 426 | 40 | 939 | 196 | 177 | 890 | 950 | 1000 | 305 | - |
| **BS3V 3 MXH 408-ITT** | G 2 1/2 | G 2 | 450 | 40 | 963 | 196 | 177 | 890 | 950 | 1000 | 305 | - |
| **BS3V 3 MXH 409-ITT** | G 2 1/2 | G 2 | 474 | 40 | 987 | 196 | 177 | 890 | 950 | 1000 | 305 | - |
| **BS3V 3 MXH 803/A-ITT** | G 3 | G 2 1/2 | 409 | 48 | 930 | 218 | 177 | 890 | 950 | 1000 | 305 | - |
| **BS3V 3 MXH 804/A-ITT** | G 3 | G 2 1/2 | 439 | 48 | 960 | 218 | 177 | 890 | 950 | 1000 | 305 | 114 |
| **BS3V 3 MXH 805/B-ITT** | G 3 | G 2 1/2 | 469 | 48 | 990 | 218 | 177 | 890 | 950 | 1000 | 305 | - |
| **BS3V 3 MXH 806-ITT** | G 3 | G 2 1/2 | 499 | 48 | 1020 | 218 | 177 | 890 | 950 | 1000 | 305 | - |
| **BS3V 3 MXH 807-ITT** | G 3 | G 2 1/2 | 529 | 48 | 1062 | 218 | 177 | 890 | 950 | 1000 | 305 | - |
| **BS3V 3 MXH 808-ITT** | G 3 | G 2 1/2 | 559 | 48 | 1092 | 218 | 192 | 890 | 950 | 1000 | 305 | - |

Non-binding dimensions to be checked when ordering
Anti-vibration kit supplied disassembled as standard

# BS. MXH

## Dimensions and weights

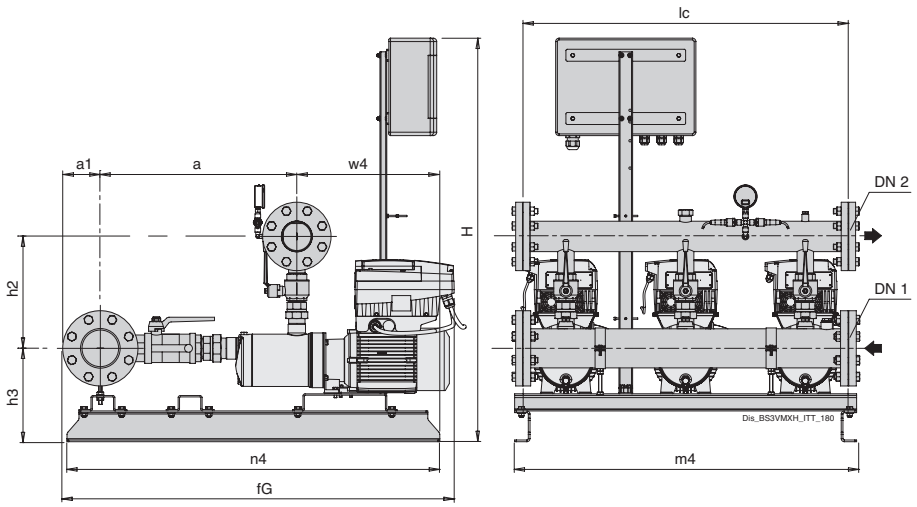


| TYPE | Manifolds | | mm | | | | | | | | | Kg |
|---|---|---|---|---|---|---|---|---|---|---|---|---|
| | DN1 | DN2 | a | a1 | fG | h2 | h3 | h9 | lc | m4 | n4 | Weight |
| **BS3V 3 MXH 1603/B-ITT** | 100 | 80 | 500 | 110 | 1100 | 321 | 258 | 980 | 950 | 1000 | 1090 | 201 |
| **BS3V 3 MXH 1604/A-IT** | 100 | 80 | 538 | 110 | 1135 | 321 | 273 | 980 | 950 | 1000 | 1090 | 233 |
| **BS3V 3 MXH 1605/B-ITT** | 100 | 80 | 575 | 110 | 1171 | 321 | 273 | 980 | 950 | 1000 | 1090 | - |
| **BS3V 3 MXH 1606/B-ITT** | 100 | 80 | 613 | 110 | 1231 | 321 | 273 | 980 | 950 | 1000 | 1090 | 250.8 |
| **BS3V 3 MXH 2002/A-ITT** | 100 | 80 | 499 | 110 | 1170 | 391 | 290 | 980 | 950 | 1000 | 1090 | - |
| **BS3V 3 MXH 2003-ITT** | 100 | 80 | 518 | 110 | 1170 | 391 | 290 | 980 | 950 | 1000 | 1090 | - |
| **BS3V 3 MXH 2004/A-ITT** | 100 | 80 | 553 | 110 | 1230 | 391 | 290 | 980 | 950 | 1000 | 1090 | - |
| **BS3V 3 MXH 2005-ITT** | 100 | 80 | 587 | 110 | 1245 | 391 | 252 | 980 | 950 | 1000 | 1090 | - |

Non-binding dimensions to be checked when ordering

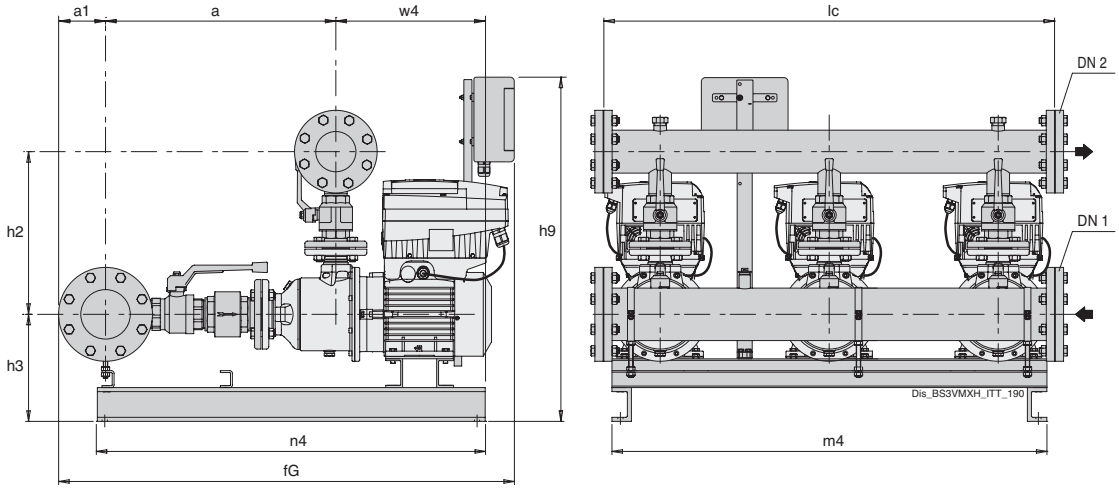


| TYPE | Manifolds | | mm | | | | | | | | | Kg |
|---|---|---|---|---|---|---|---|---|---|---|---|---|
| | DN1 | DN2 | a | a1 | fG | h2 | h3 | h9 | lc | m4 | n4 | Weight |
| **BS3V 3 MXH-F 3202/B-ITT** | 125 | 100 | 571 | 125 | 1180 | 415 | 318 | 1246 | 1200 | 1150 | 1065 | - |
| **BS3V 3 MXH-F 3203/A-ITT** | 125 | 100 | 617 | 125 | 1096 | 415 | 318 | 1246 | 1200 | 1150 | 1060 | 365 |
| **BS3V 3 MXH-F 3204/A-ITT** | 125 | 100 | 663 | 125 | 1320 | 415 | 318 | 1246 | 1200 | 1150 | 1110 | - |
| **BS3V 3 MXH-F 4802/A-ITT** | 150 | 125 | 668 | 142.5 | 1320 | 480 | 316 | 1246 | 1200 | 1150 | 1065 | - |
| **BS3V 3 MXH-F 4803/A-ITT** | 150 | 125 | 750 | 142.5 | 1381 | 480 | 316 | 1246 | 1200 | 1150 | 1110 | - |

Non-binding dimensions to be checked when ordering

# BS. MPSU

Pressure units with 1 to 3 multi-stage vertical, fixed or variable speed pumps (INVERTER)

## Coverage chart

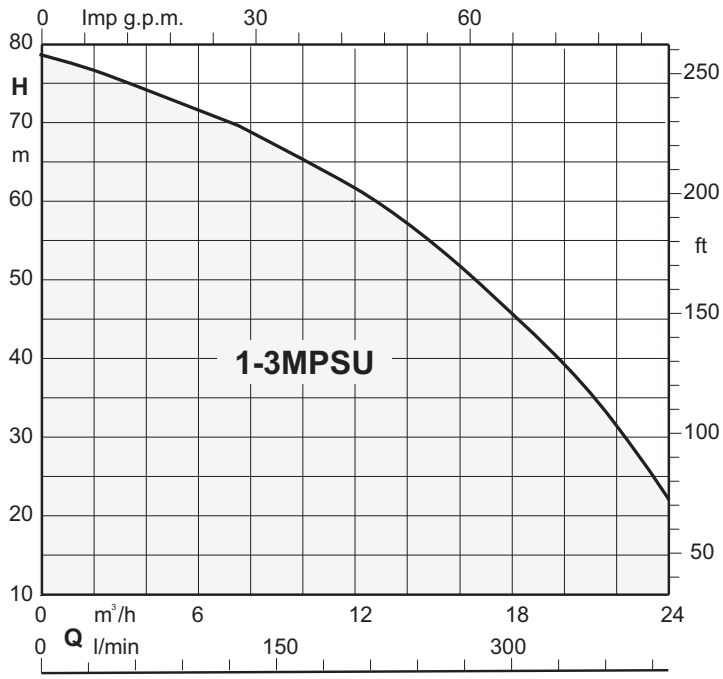


## Fixed speed units

BS 2-6F Pressure boosting sets with 2 to 6 fixed speed pump.
Sets with 4,5 and 6 pumps on request.
Depending on the reduction of the pressure in the system, the pressure switches (pressure transducer for 3-pump sets) determine the starting up of the pumps in sequence and the microprocessor alternates the starts.

## Variable speed units with EASYMAT

BS1-3V Pressure boosting sets with 1 to 3 variable speed pumps (with EASYMAT).
Depending on water consumption, one or more pumps are activated, all at variable speed, in order to guarantee the quantity of water required at the set pressure.

## Construction

Automatic pressure boosting plant consisting of 1 to 6 vertical multistage pumps complete with ball, non return valve on the suction side and ball valves on the delivery side.
Suction and delivery manifolds for boosting sets with 2,3 pumps in stainless steel AISI 304.
Connections are located on the delivery manifold for the installation of vessels G1 connection.
Electrical control boards:

- with microprocessor for fixed speed pump units. Motor starting is D.O.L. up to 5,5 kW and Y/Δ for power rating 7,5 kW.
- with frequency converter for variable speed pump units.

The unit includes one pressure gauge and three adjustable differential pressure switches or pressure transducer.

## Applications

To supply water in civil and industrial buildings.
For increasing network pressure (follow local specifications).

## Motor

2-pole induction motors, 50 Hz, n ≈ 2900 1/min.
Three-phase 230V - 400V ± 10%;
Single-phase 230 V ± 10%.
Insulation class F.
Protection IP 68.
Constructed in accordance with IEC 60034.
Other voltages and frequencies on request.

## Vessels on request

When installing the unit, connect in the delivery section to a diaphragm or galvanised tank.
The recommended sized are shown in the following page.

## Special features on request

Pressure unit with 4, 5 and 6 pumps

# BS. MPSU

## Characteristic curves

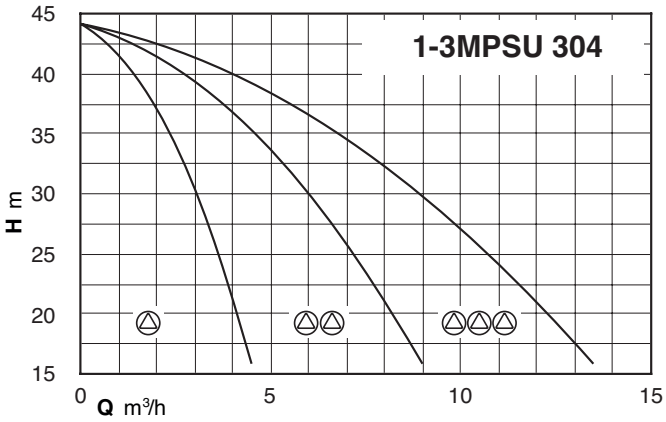


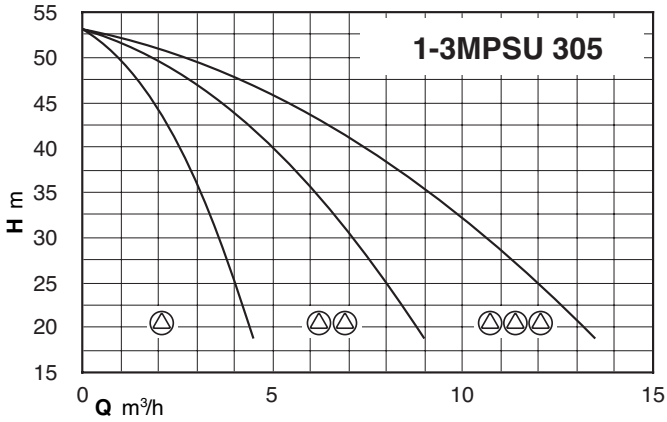


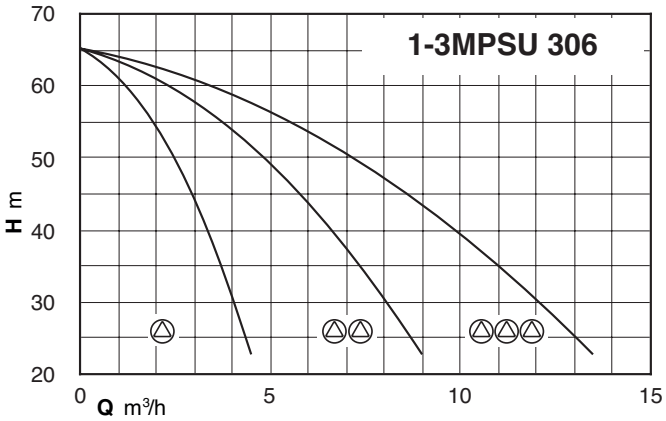


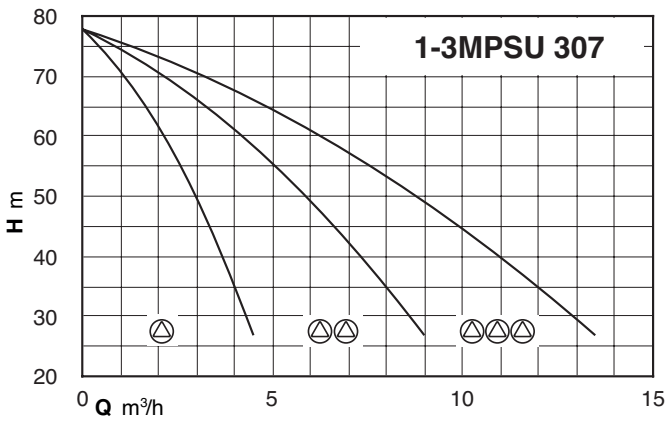


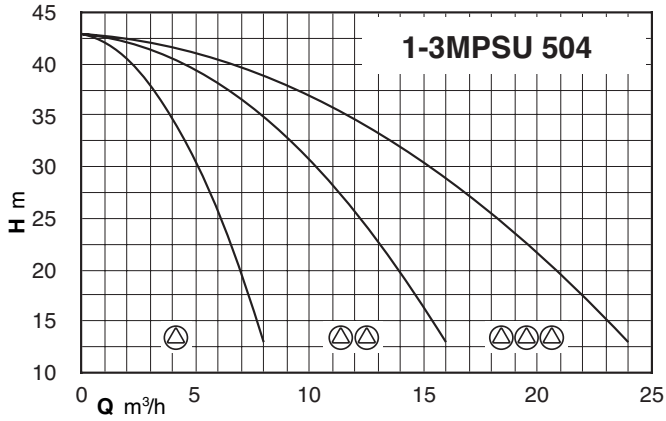


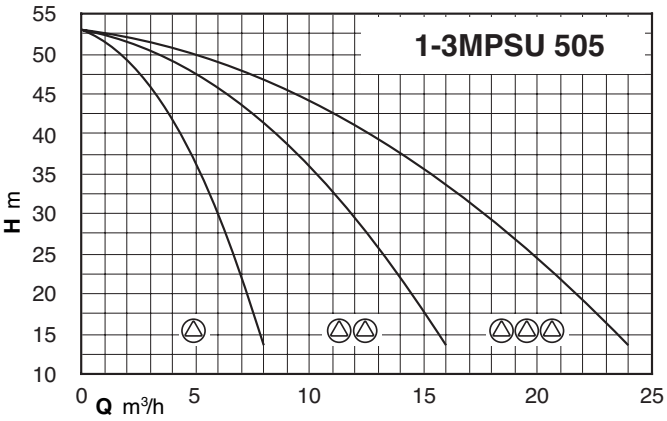


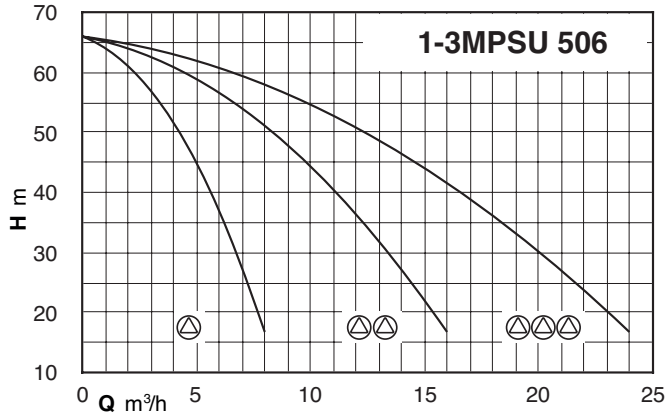


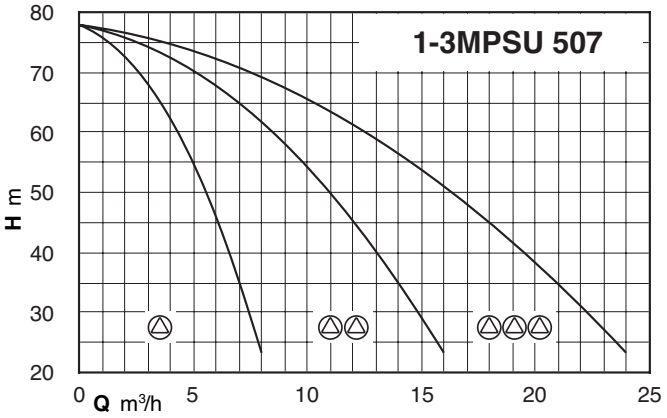

# BS. MPSU

calpeda®

**Fixed speed pump units**

**BS2F**

| | | Pressure switch | | Tank | |
|---|---|---|---|---|---|
| | | 1 | 2 | membrane | Vessel |
| Model | P2 | Start/Stop | | | |
| | kW | bar | | litri | |
| BS2F 2 MPSU 304 | 0.55 X2 | 1.8 - 2.6 | 1.5 - 2.3 | 24X2 | 100 |
| BS2F 2 MPSU 305 | 0.75 X2 | 2.3 - 3.1 | 2 - 2.8 | 24X2 | 100 |
| BS2F 2 MPSU 306 | 0.9 X2 | 3 - 3.9 | 2.7 - 3.6 | 24X2 | 100 |
| BS2F 2 MPSU 307 | 0.9 X2 | 2.9 - 4.4 | 2.6 - 4.1 | 24X2 | 100 |
| BS2F 2 MPSU 504 | 0.9 X2 | 2.7 - 3.5 | 2.4 - 3.2 | 150 | 200 |
| BS2F 2 MPSU 505 | 1.1 X2 | 3.4 - 4.3 | 3.1 - 4 | 150 | 200 |
| BS2F 2 MPSU 506 | 1.1 X2 | 3.6 - 5.2 | 3.4 - 4.9 | 150 | 200 |
| BS2F 2 MPSU 507 | 1.5 X2 | 4.6 - 6.3 | 4.3 - 6 | 150 | 200 |

400V 3~ power supply / 400V 3~ motor
Start and stop pressure controlled by pressure switches

**BSM2F**

| | | Pressure switch | | Tank | |
|---|---|---|---|---|---|
| | | 1 | 2 | membrane | Vessel |
| Model | P2 | Start/Stop | | | |
| | kW | bar | | litri | |
| BSM2F 2 MPSUM 304 | 0.55 X2 | 1.8 - 2.6 | 1.5 - 2.3 | 24X2 | 100 |
| BSM2F 2 MPSUM 305 | 0.75 X2 | 2.3 - 3.1 | 2 - 2.8 | 24X2 | 100 |
| BSM2F 2 MPSUM 306 | 0.9 X2 | 3 - 3.9 | 2.7 - 3.6 | 24X2 | 100 |
| BSM2F 2 MPSUM 307 | 0.9 X2 | 2.9 - 4.4 | 2.6 - 4.1 | 24X2 | 100 |
| BSM2F 2 MPSUM 504 | 0.9 X2 | 2.7 - 3.5 | 2.4 - 3.2 | 150 | 200 |
| BSM2F 2 MPSUM 505 | 1.1 X2 | 3.4 - 4.3 | 3.1 - 4 | 150 | 200 |
| BSM2F 2 MPSUM 506 | 1.1 X2 | 3.6 - 5.2 | 3.4 - 4.9 | 150 | 200 |
| BSM2F 2 MPSUM 507 | 1.5 X2 | 4.6 - 6.3 | 4.3 - 6 | 150 | 200 |

230V 1~ power supply / 230V 1~ motor
Start and stop pressure controlled by pressure switches

**BS3F**

| | | Transducer | Tank | |
|---|---|---|---|---|
| | | 1 | membrane | Vessel |
| Model | P2 | Start/Stop | | |
| | kW | bar | litri | |
| BS3F 3 MPSU 304 | 0.55 X3 | 1.8 - 2.6 | 24X2 | 100 |
| BS3F 3 MPSU 305 | 0.75 X3 | 2.3 - 3.1 | 24X2 | 100 |
| BS3F 3 MPSU 306 | 0.9 X3 | 3 - 3.9 | 24X2 | 100 |
| BS3F 3 MPSU 307 | 0.9 X3 | 2.9 - 4.4 | 24X2 | 100 |
| BS3F 3 MPSU 504 | 0.9 X3 | 2.7 - 3.5 | 150 | 200 |
| BS3F 3 MPSU 505 | 1.1 X3 | 3.4 - 4.3 | 150 | 200 |
| BS3F 3 MPSU 506 | 1.1 X3 | 3.6 - 5.2 | 150 | 200 |
| BS3F 3 MPSU 507 | 1.5 X3 | 4.6 - 6.3 | 150 | 200 |

400V 3~ power supply / 400V 3~ motor
Start and stop pressure controlled by a pressure transducer

# BS. MPSU

calpeda®

**Variable speed pump units with frequency converter**

**BSM1V ..-EMT**

| | | voltage | |
|---|---|---|---|
| | | Mains Voltage | Motor |
| Model | P2 | 1 ~230 V | 3 ~230 V |
| | kW | A | A |
| BSM1V 1 MPSU 304-EMT | 0.55 | 6,5 | 2,8 |
| BSM1V 1 MPSU 305-EMT | 0.75 | 7,7 | 3,3 |
| BSM1V 1 MPSU 306-EMT | 0.9 | 8,8 | 3,8 |
| BSM1V 1 MPSU 307-EMT | 0.9 | 10,5 | 4,5 |
| BSM1V 1 MPSU 504-EMT | 0.9 | 8,7 | 3,8 |
| BSM1V 1 MPSU 505-EMT | 1.1 | 10,9 | 4,5 |
| BSM1V 1 MPSU 506-EMT | 1.1 | 11,3 | 4,8 |
| BSM1V 1 MPSU 507-EMT | 1.5 | 14,6 | 6,9 |

**BSM2V ..-EMT**

| | | voltage | |
|---|---|---|---|
| | | Mains Voltage | Motor |
| Model | P2 | 1 ~230 V | 3 ~230 V |
| | kW | A | A |
| BSM2V 2 MPSU 304-EMT | 0.55 X2 | 6,5 X 2 | 2,8 X 2 |
| BSM2V 2 MPSU 305-EMT | 0.75 X2 | 7,7 X 2 | 3,3 X 2 |
| BSM2V 2 MPSU 306-EMT | 0.9 X2 | 8,8 X 2 | 3,8 X 2 |
| BSM2V 2 MPSU 307-EMT | 0.9 X2 | 10,5 X 2 | 4,5 X 2 |
| BSM2V 2 MPSU 504-EMT | 0.9 X2 | 8,7 X 2 | 3,8 X 2 |
| BSM2V 2 MPSU 505-EMT | 1.1 X2 | 10,9 X 2 | 4,5 X 2 |
| BSM2V 2 MPSU 506-EMT | 1.1 X2 | 11,3 X 2 | 4,8 X 2 |
| BSM2V 2 MPSU 507-EMT | 1.5 X2 | 14,6 X 2 | 6,9 X 2 |

**BSM3V ..-EMT**

| | | voltage | |
|---|---|---|---|
| | | Mains Voltage | Motor |
| Model | P2 | 1 ~230 V | 3 ~230 V |
| | kW | A | A |
| BSM3V 3 MPSU 304-EMT | 0.55 X3 | 6,5 X 3 | 2,8 X 3 |
| BSM3V 3 MPSU 305-EMT | 0.75 X3 | 7,7 X 3 | 3,3 X 3 |
| BSM3V 3 MPSU 306-EMT | 0.9 X3 | 8,8 X 3 | 3,8 X 3 |
| BSM3V 3 MPSU 307-EMT | 0.9 X3 | 10,5 X 3 | 4,5 X 3 |
| BSM3V 3 MPSU 504-EMT | 0.9 X3 | 8,7 X 3 | 3,8 X 3 |
| BSM3V 3 MPSU 505-EMT | 1.1 X3 | 10,9 X 3 | 4,5 X 3 |
| BSM3V 3 MPSU 506-EMT | 1.1 X3 | 11,3 X 3 | 4,8 X 3 |
| BSM3V 3 MPSU 507-EMT | 1.5 X3 | 14,6 X 3 | 6,9 X 3 |

# BS. MPSU

## Dimensions and weights

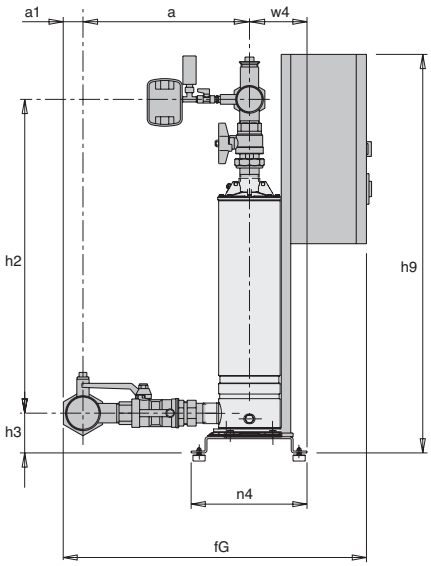


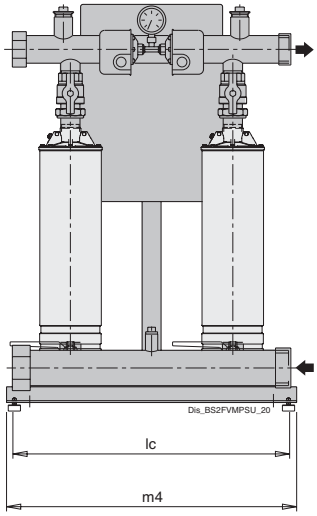


| TYPE | Manifolds | | mm | | | | | | | | | Kg |
|---|---|---|---|---|---|---|---|---|---|---|---|---|
| | DN1 | DN2 | a | fG | h2 | h3 | h9 | lc | m4 | n4 | w4 | Weight |
| **BS2F 2 MPSU 304** | G 2 | G 2 | 330 | 736 | 629 | 84 | 865 | 600 | 625 | 365 | 220 | 107.5 |
| **BS2F 2 MPSU 305** | G 2 | G 2 | 330 | 736 | 698 | 84 | 865 | 600 | 625 | 365 | 220 | 107.5 |
| **BS2F 2 MPSU 306** | G 2 | G 2 | 330 | 736 | 722 | 84 | 865 | 600 | 625 | 365 | 220 | 107.5 |
| **BS2F 2 MPSU 307** | G 2 | G 2 | 330 | 736 | 746 | 84 | 865 | 600 | 625 | 365 | 220 | 107.5 |
| **BS2F 2 MPSU 504** | G 2 | G 2 | 330 | 736 | 674 | 84 | 865 | 600 | 625 | 365 | 220 | 107.5 |
| **BS2F 2 MPSU 505** | G 2 | G 2 | 330 | 736 | 698 | 84 | 865 | 600 | 625 | 365 | 220 | 107.5 |
| **BS2F 2 MPSU 506** | G 2 | G 2 | 330 | 736 | 767 | 84 | 865 | 600 | 625 | 365 | 220 | 107.5 |
| **BS2F 2 MPSU 507** | G 2 | G 2 | 330 | 736 | 816 | 84 | 865 | 600 | 625 | 365 | 220 | 107.5 |

Non-binding dimensions to be checked when ordering
Anti-vibration kit supplied disassembled as standard

# BS. MPSU

## Dimensions and weights

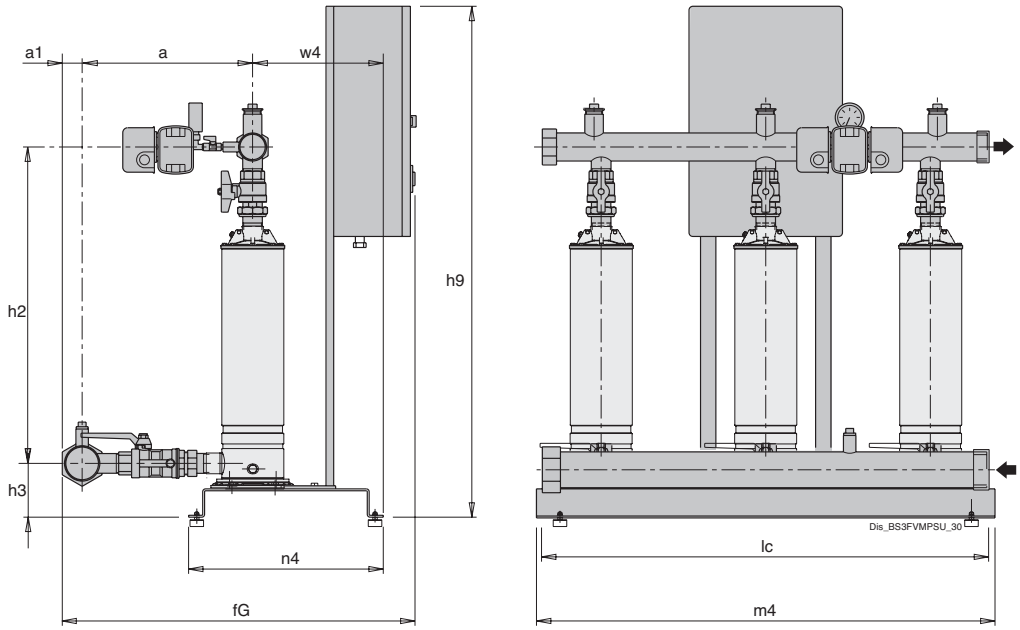


| TYPE | Manifolds | | mm | | | | | | | |
|---|---|---|---|---|---|---|---|---|---|---|
| | DN1 | DN2 | a | fG | h2 | h3 | h9 | lc | m4 | n4 |
| **BS3F 3 MPSU 304** | G 2 1/2 | G 2 | 329 | 735 | 636 | 105 | 1090 | 950 | 1000 | 406 |
| **BS3F 3 MPSU 305** | G 2 1/2 | G 2 | 329 | 735 | 705 | 105 | 1090 | 950 | 1000 | 406 |
| **BS3F 3 MPSU 306** | G 2 1/2 | G 2 | 329 | 735 | 729 | 105 | 1090 | 950 | 1000 | 406 |
| **BS3F 3 MPSU 307** | G 2 1/2 | G 2 | 329 | 735 | 753 | 105 | 1090 | 950 | 1000 | 406 |
| **BS3F 3 MPSU 504** | G 2 1/2 | G 2 | 329 | 735 | 681 | 105 | 1090 | 950 | 1000 | 406 |
| **BS3F 3 MPSU 505** | G 2 1/2 | G 2 | 329 | 735 | 705 | 105 | 1090 | 950 | 1000 | 406 |
| **BS3F 3 MPSU 506** | G 2 1/2 | G 2 | 329 | 735 | 774 | 105 | 1090 | 950 | 1000 | 406 |
| **BS3F 3 MPSU 507** | G 2 1/2 | G 2 | 329 | 735 | 823 | 105 | 1090 | 950 | 1000 | 406 |

Non-binding dimensions to be checked when ordering
Anti-vibration kit supplied disassembled as standard

# BS. MPSU

## Dimensions and weights

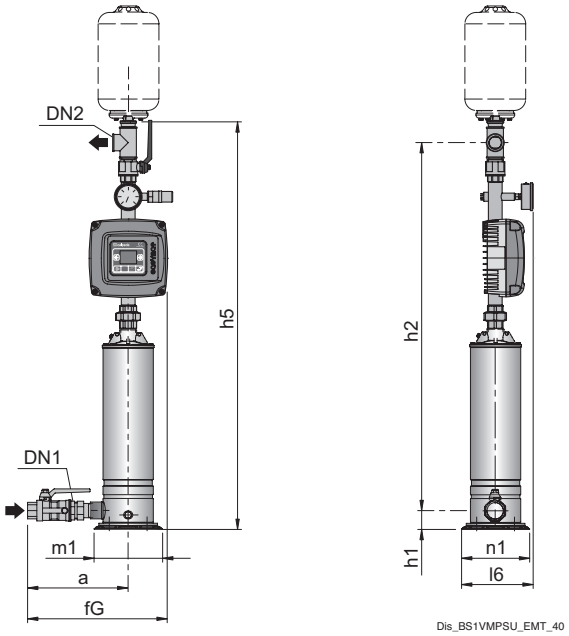


| TYPE | Manifolds | | mm | | | | | | | | Kg |
|---|---|---|---|---|---|---|---|---|---|---|---|
| | DN1 | DN2 | a | fG | h1 | h2 | h5 | l6 | m1 | n1 | Weight |
| **BSM1V 1 MPSU 304-EMT** | G 1 1/4 | G 1 1/4 | 286 | 376 | 50 | 952 | 1002 | 205 | 180 | 205 | 18.2 |
| **BSM1V 1 MPSU 305-EMT** | G 1 1/4 | G 1 1/4 | 286 | 376 | 50 | 1021 | 1071 | 205 | 180 | 205 | 18.7 |
| **BSM1V 1 MPSU 306-EMT** | G 1 1/4 | G 1 1/4 | 286 | 376 | 50 | 1045 | 1095 | 205 | 180 | 205 | 53.8 |
| **BSM1V 1 MPSU 307-EMT** | G 1 1/4 | G 1 1/4 | 286 | 376 | 50 | 1069 | 1119 | 205 | 180 | 205 | 53.8 |
| **BSM1V 1 MPSU 504-EMT** | G 1 1/4 | G 1 1/4 | 286 | 376 | 50 | 997 | 1047 | 205 | 180 | 205 | 53.8 |
| **BSM1V 1 MPSU 505-EMT** | G 1 1/4 | G 1 1/4 | 286 | 376 | 50 | 1021 | 1071 | 205 | 180 | 205 | 53.8 |
| **BSM1V 1 MPSU 506-EMT** | G 1 1/4 | G 1 1/4 | 286 | 376 | 50 | 1090 | 1140 | 205 | 180 | 205 | 53.8 |
| **BSM1V 1 MPSU 507-EMT** | G 1 1/4 | G 1 1/4 | 286 | 376 | 50 | 1139 | 1189 | 205 | 180 | 205 | 53.8 |

Non-binding dimensions to be checked when ordering

# BS. MPSU

## Performance, dimensions and weights

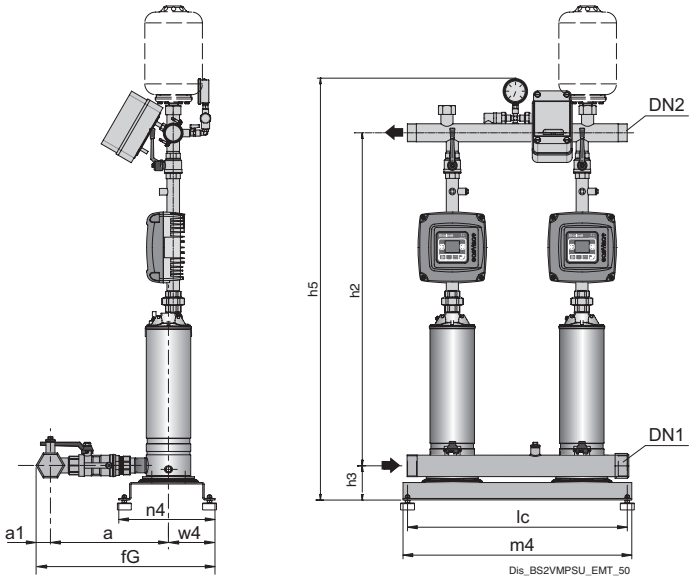


| TYPE | Manifolds | | mm | | | | | | | | | Kg |
|---|---|---|---|---|---|---|---|---|---|---|---|---|
| | DN1 | DN2 | a | fG | h2 | h3 | h5 | lc | m4 | n4 | w4 | Weight |
| **BSM2V 2 MPSU 304-EMT** | G 2 | G 2 | 320 | 580 | 932 | 84 | 1130 | 600 | 625 | 365 | 220 | 107.5 |
| **BSM2V 2 MPSU 305-EMT** | G 2 | G 2 | 320 | 580 | 1001 | 84 | 1199 | 600 | 625 | 365 | 220 | 50 |
| **BSM2V 2 MPSU 306-EMT** | G 2 | G 2 | 320 | 580 | 1025 | 84 | 1223 | 600 | 625 | 365 | 220 | 107.5 |
| **BSM2V 2 MPSU 307-EMT** | G 2 | G 2 | 320 | 580 | 1049 | 84 | 1247 | 600 | 625 | 365 | 220 | 107.5 |
| **BSM2V 2 MPSU 504-EMT** | G 2 | G 2 | 320 | 580 | 977 | 84 | 1175 | 600 | 625 | 365 | 220 | 50 |
| **BSM2V 2 MPSU 505-EMT** | G 2 | G 2 | 320 | 580 | 1001 | 84 | 1199 | 600 | 625 | 365 | 220 | 107.5 |
| **BSM2V 2 MPSU 506-EMT** | G 2 | G 2 | 320 | 580 | 1070 | 84 | 1268 | 600 | 625 | 365 | 220 | 107.5 |
| **BSM2V 2 MPSU 507-EMT** | G 2 | G 2 | 320 | 580 | 1119 | 84 | 1317 | 600 | 625 | 365 | 220 | 60 |

Non-binding dimensions to be checked when ordering
Anti-vibration kit supplied disassembled as standard

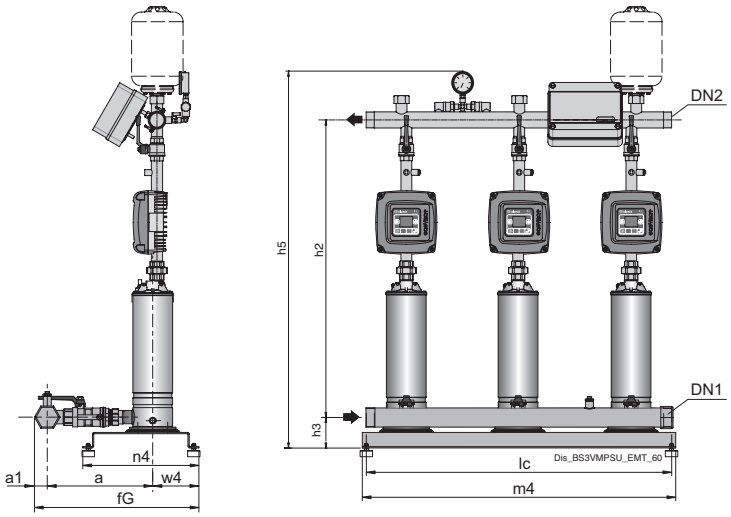


| TYPE | Manifolds | | mm | | | | | | | | |
|---|---|---|---|---|---|---|---|---|---|---|---|
| | DN1 | DN2 | a | fG | h2 | h3 | h5 | lc | m4 | n4 | w4 |
| **BSM3V 3 MPSU 304-EMT** | G 2 1/2 | G 2 | 329 | 566 | 953 | 105 | 1151 | 950 | 1000 | 406 | 237 |
| **BSM3V 3 MPSU 305-EMT** | G 2 1/2 | G 2 | 329 | 566 | 1022 | 105 | 1120 | 950 | 1000 | 406 | 237 |
| **BSM3V 3 MPSU 306-EMT** | G 2 1/2 | G 2 | 329 | 566 | 1046 | 105 | 1244 | 950 | 1000 | 406 | 237 |
| **BSM3V 3 MPSU 307-EMT** | G 2 1/2 | G 2 | 329 | 566 | 1070 | 105 | 1268 | 950 | 1000 | 406 | 237 |
| **BSM3V 3 MPSU 504-EMT** | G 2 1/2 | G 2 | 329 | 566 | 998 | 105 | 1196 | 950 | 1000 | 406 | 237 |
| **BSM3V 3 MPSU 505-EMT** | G 2 1/2 | G 2 | 329 | 566 | 1022 | 105 | 1220 | 950 | 1000 | 406 | 237 |
| **BSM3V 3 MPSU 506-EMT** | G 2 1/2 | G 2 | 329 | 566 | 1091 | 105 | 1286 | 950 | 1000 | 406 | 237 |
| **BSM3V 3 MPSU 507-EMT** | G 2 1/2 | G 2 | 329 | 566 | 1140 | 105 | 1338 | 950 | 1000 | 406 | 237 |

Non-binding dimensions to be checked when ordering
Anti-vibration kit supplied disassembled as standard

# BS. MXV-B

Pressure units with 1 to 3 multi-stage vertical, fixed or variable speed pumps (INVERTER)

## Coverage chart

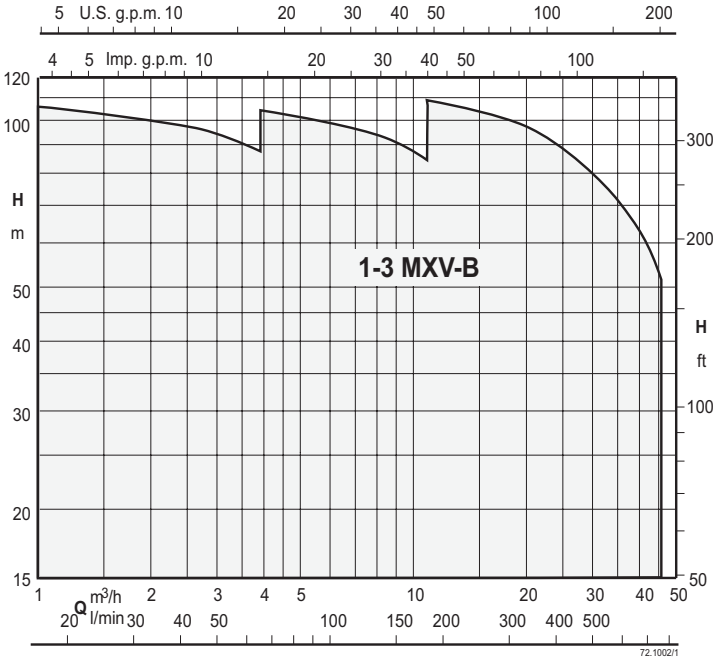


## Variable speed units with EASYMAT

BS1-3V Pressure boosting sets with 1 to 3 variable speed pumps (with EASYMAT).
Depending on water consumption, one or more pumps are activated, all at variable speed, in order to guarantee the quantity of water required at the set pressure.

## Variable speed units with EASYMAT

BS2V Pressure boosting sets with 2 variable speed pumps with EASYMAT.
Depending on water consumption, one or more pumps are activated, all at variable speed, in order to guarantee the quantity of water required at the set pressure.

## Variable speed pump units with WALL

BS2V Pressure boosting sets with 2 variable speed pumps with WALL.
Depending on water consumption, one or more pumps are activated, all at variable speed, in order to guarantee the quantity of water required at the set pressure.

## Construction

Automatic booster set consisting of 2 to 3 vertical multistage pumps complete with ball, non return valve on the suction side and ball valves on the delivery side.
Suction and delivery manifolds for boosting sets with 2,3 pumps in stainless steel AISI 304.
Connections are located on the delivery manifold for the installation of vessels with a G1 connection.

## Applications

To supply water in civil and industrial buildings.
As pressure boosting pump to increase water pressure when needed (follow local rules).

## Motor

2-pole induction motors, 50 Hz, n ≈ 2900 1/min.
Three-phase: 230/400V ± 10%
set up for inverter operation;
Single-phase: 230V ± 10% (on request)
Insulation class F.
Protection IP54
Constructed in accordance with IEC 60034.
Other voltages and frequencies on request.

## Vessels on request

When installing the unit, connect in the delivery section to a diaphragm or galvanised tank.
The recommended sized are shown in the following page.

# BS. MXV-B

calpeda

## Characteristic curves

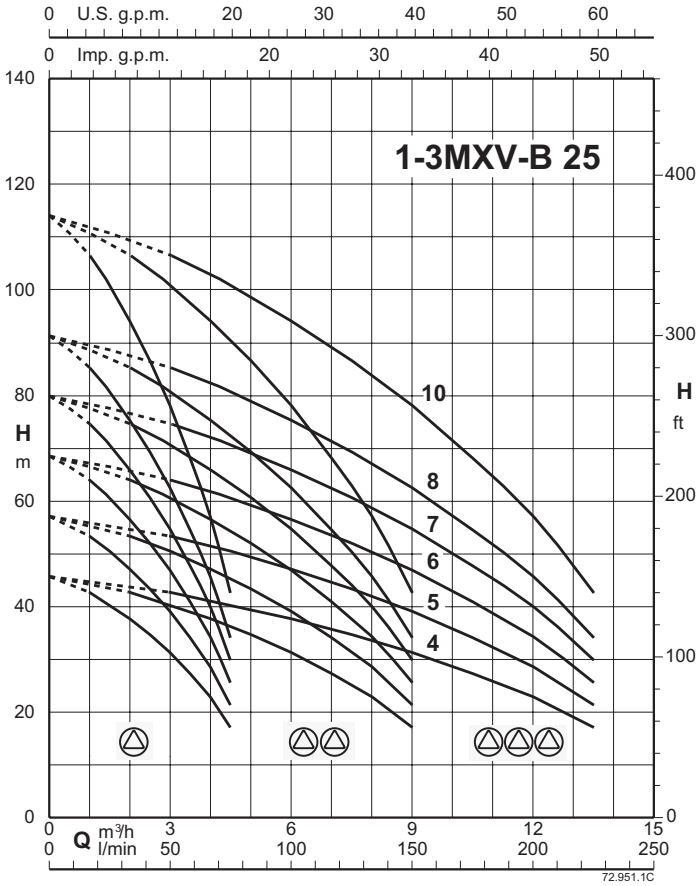


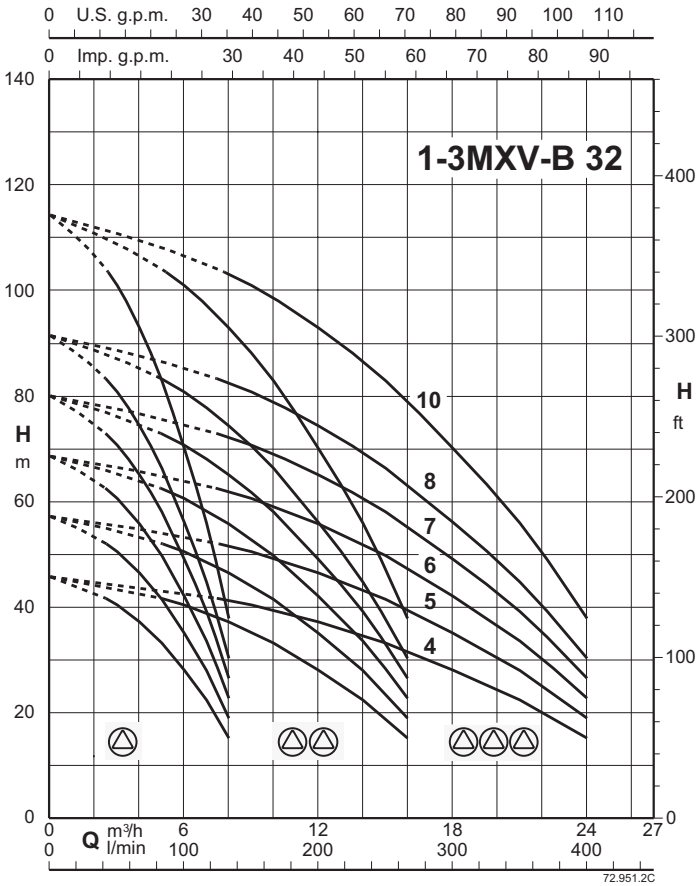


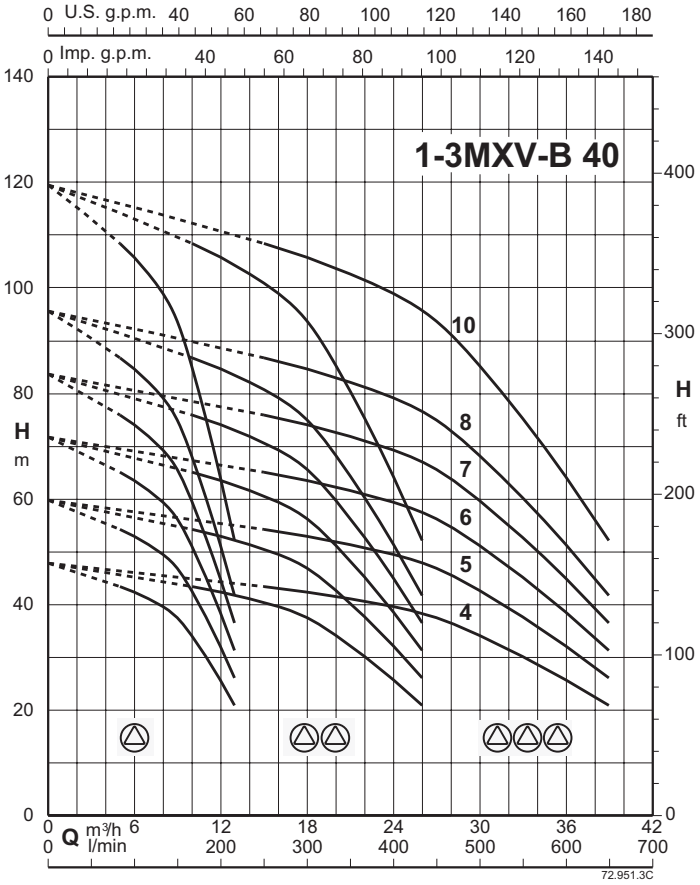


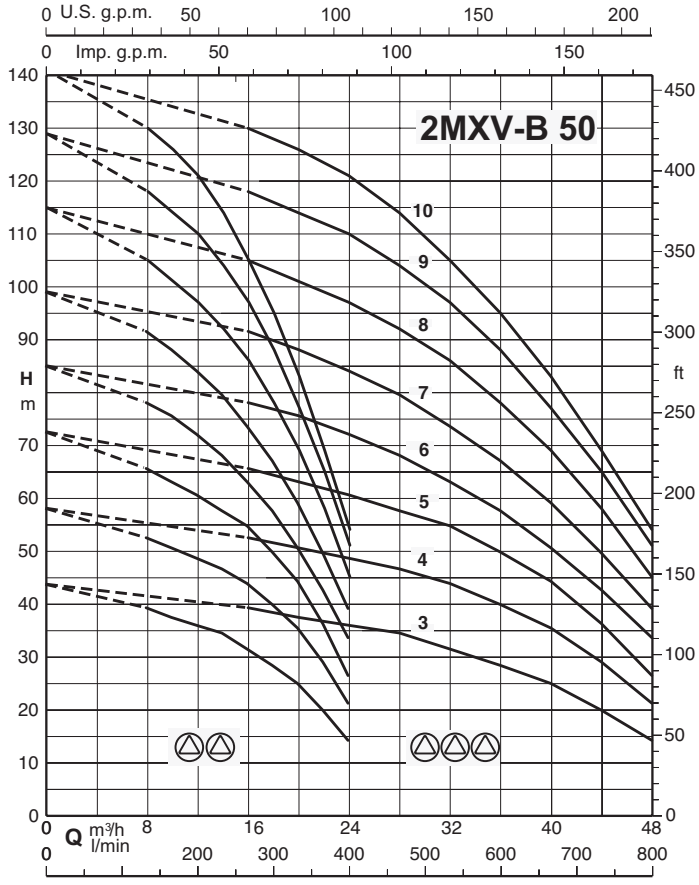

# BS. MXV-B

calpeda®

**Variable speed pump units with EASYMAT**

**BSM1V ..-EMT**

| Model | P2 |
|---|---|
| | kW |
| BSM1V 1 MXV-B 25-304 O-EMT | 0.75 |
| BSM1V 1 MXV-B 25-305 O-EMT | 0.75 |
| BSM1V 1 MXV-B 25-306 O-EMT | 1.1 |
| BSM1V 1 MXV-B 25-307 O-EMT | 1.1 |
| BSM1V 1 MXV-B 25-308 O-EMT | 1.5 |
| BSM1V 1 MXV-B 25-310 O-EMT | 1.5 |
| BSM1V 1 MXV-B 32-504 O-EMT | 1.1 |
| BSM1V 1 MXV-B 32-505 O-EMT | 1.1 |
| BSM1V 1 MXV-B 32-506 O-EMT | 1.5 |
| BSM1V 1 MXV-B 32-507 O-EMT | 1.5 |
| BSM1V 1 MXV-B 32-508 O-EMT | 2.2 |
| BSM1V 1 MXV-B 32-510 O-EMT | 2.2 |
| BSM1V 1 MXV-B 40-904 O-EMT | 1.5 |
| BSM1V 1 MXV-B 40-905 O-EMT | 2.2 |
| BSM1V 1 MXV-B 40-906 O-EMT | 2.2 |

**BSM2V ..-EMT**

| Model | P2 |
|---|---|
| | kW |
| BSM2V 2 MXV-B 25-304 O-EMT | 0.75 X2 |
| BSM2V 2 MXV-B 25-305 O-EMT | 0.75 X2 |
| BSM2V 2 MXV-B 25-306 O-EMT | 1.1 X2 |
| BSM2V 2 MXV-B 25-307 O-EMT | 1.1 X2 |
| BSM2V 2 MXV-B 25-308 O-EMT | 1.5 X2 |
| BSM2V 2 MXV-B 25-310 O-EMT | 1.5 X2 |
| BSM2V 2 MXV-B 32-504 O-EMT | 1.1 X2 |
| BSM2V 2 MXV-B 32-505 O-EMT | 1.1 X2 |
| BSM2V 2 MXV-B 32-506 O-EMT | 1.5 X2 |
| BSM2V 2 MXV-B 32-507 O-EMT | 1.5 X2 |
| BSM2V 2 MXV-B 32-508 O-EMT | 2.2 X2 |
| BSM2V 2 MXV-B 32-510 O-EMT | 2.2 X2 |
| BSM2V 2 MXV-B 40-904 O-EMT | 1.5 X2 |
| BSM2V 2 MXV-B 40-905 O-EMT | 2,2 X2 |
| BSM2V 2 MXV-B 40-906 O-EMT | 2.2 X2 |

**BSM3V ..-EMT**

| Model | P2 |
|---|---|
| | kW |
| BSM3V 3 MXV-B 25-304 O-EMT | 0.75 X3 |
| BSM3V 3 MXV-B 25-305 O-EMT | 0.75 X3 |
| BSM3V 3 MXV-B 25-306 O-EMT | 1.1 X3 |
| BSM3V 3 MXV-B 25-307 O-EMT | 1.1 X3 |
| BSM3V 3 MXV-B 25-308 O-EMT | 1.5 X3 |
| BSM3V 3 MXV-B 25-310 O-EMT | 1.5 X3 |
| BSM3V 3 MXV-B 32-504 O-EMT | 1.1 X3 |
| BSM3V 3 MXV-B 32-505 O-EMT | 1.1 X3 |
| BSM3V 3 MXV-B 32-506 O-EMT | 1.5 X3 |
| BSM3V 3 MXV-B 32-507 O-EMT | 1.5 X3 |
| BSM3V 3 MXV-B 32-508 O-EMT | 2.2 X3 |
| BSM3V 3 MXV-B 32-510 O-EMT | 2.2 X3 |
| BSM3V 3 MXV-B 40-904 O-EMT | 1.5 X3 |
| BSM3V 3 MXV-B 40-905 O-EMT | 2.2 X3 |
| BSM3V 3 MXV-B 40-906 O-EMT | 2.2 X3 |

**Variable speed pump units with EASYMAT4**

**BSM2V ..-EMT2**

| Model | P2 |
|---|---|
| | kW |
| BSM2V 2 MXV-B 25-304 O-EMT2 | 0.75 X2 |
| BSM2V 2 MXV-B 25-305 O-EMT2 | 0.75 X2 |
| BSM2V 2 MXV-B 25-306 O-EMT2 | 1.1 X2 |
| BSM2V 2 MXV-B 25-307 O-EMT2 | 1.1 X2 |
| BSM2V 2 MXV-B 25-308 O-EMT2 | 1.5 X2 |
| BSM2V 2 MXV-B 25-310 O-EMT2 | 1.5 X2 |
| BSM2V 2 MXV-B 32-504 O-EMT2 | 1.1 X2 |
| BSM2V 2 MXV-B 32-505 O-EMT2 | 1.1 X2 |
| BSM2V 2 MXV-B 32-506 O-EMT2 | 1.5 X2 |
| BSM2V 2 MXV-B 32-507 O-EMT2 | 1.5 X2 |
| BSM2V 2 MXV-B 32-508 O-EMT2 | 2.2 X2 |
| BSM2V 2 MXV-B 32-510 O-EMT2 | 2.2 X2 |
| BSM2V 2 MXV-B 40-904 O-EMT2 | 1.5 X2 |
| BSM2V 2 MXV-B 40-905 O-EMT2 | 2.2 X2 |
| BSM2V 2 MXV-B 40-906 O-EMT2 | 2.2 X2 |

**Variable speed pump units with WALL**

**BS2V ..-WALL**

| Model | P2 |
|---|---|
| | kW |
| BS2V 2 MXV-B 25-304 O-WALL | 0.75 X2 |
| BS2V 2 MXV-B 25-305 O-WALL | 0.75 X2 |
| BS2V 2 MXV-B 25-306 O-WALL | 1.1 X2 |
| BS2V 2 MXV-B 25-307 O-WALL | 1.1 X2 |
| BS2V 2 MXV-B 25-308 O-WALL | 1.5 X2 |
| BS2V 2 MXV-B 25-310 O-WALL | 1.5 X2 |
| BS2V 2 MXV-B 32-504 O-WALL | 1.1 X2 |
| BS2V 2 MXV-B 32-505 O-WALL | 1.1 X2 |
| BS2V 2 MXV-B 32-506 O-WALL | 1.5 X2 |
| BS2V 2 MXV-B 32-507 O-WALL | 1.5 X2 |
| BS2V 2 MXV-B 32-508 O-WALL | 2.2 X2 |
| BS2V 2 MXV-B 32-510 O-WALL | 2.2 X2 |
| BS2V 2 MXV-B 40-904 O-WALL | 1.5 X2 |
| BS2V 2 MXV-B 40-905 O-WALL | 2.2 X2 |
| BS2V 2 MXV-B 40-906 O-WALL | 2.2 X2 |
| BS2V 2 MXV-B 40-907 O-WALL | 3 X2 |
| BS2V 2 MXV-B 40-908 O-WALL | 3 X2 |
| BS2V 2 MXV-B 40-910 O-WALL | 3.7 X2 |
| BS2V 2 MXV-B 50-1503 O-WALL | 2.2 X2 |
| BS2V 2 MXV-B 50-1504 O-WALL | 3 X2 |
| BS2V 2 MXV-B 50-1505 O-WALL | 4 X2 |
| BS2V 2 MXV-B 50-1506 O-WALL | 5.5 X2 |
| BS2V 2 MXV-B 50-1507 O-WALL | 5.5 X2 |

# BS. MXV-B

## Dimensions and weights

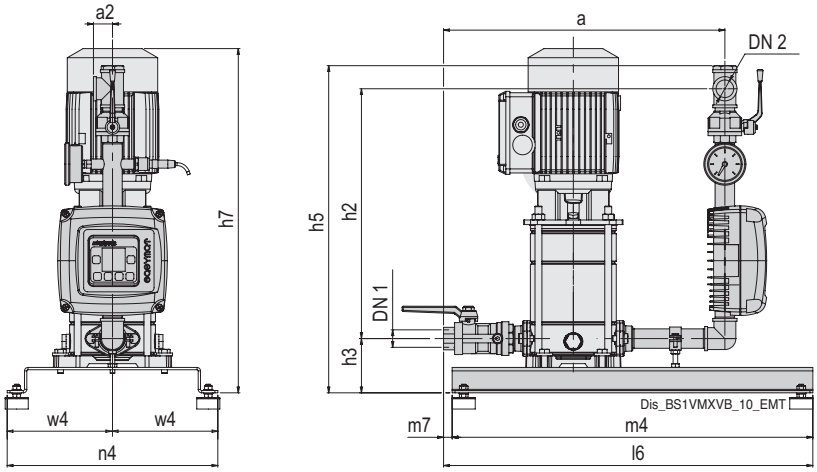


| TYPE | Manifolds | | mm | | | | | | | | | | Kg |
|---|---|---|---|---|---|---|---|---|---|---|---|---|---|
| | DN1 | DN2 | a | a2 | h2 | h3 | h5 | h7 | l6 | m4 | n4 | w4 | Weight |
| **BSM1V 1 MXV-B 25-304 O-EMT** | G 1 | G 1 | 488 | 33 | 433 | 94 | 567 | 597 | 640 | 625 | 365 | 183 | 29 |
| **BSM1V 1 MXV-B 25-305 O-EMT** | G 1 | G 1 | 488 | 33 | 433 | 94 | 567 | 621 | 640 | 625 | 365 | 183 | 30.4 |
| **BSM1V 1 MXV-B 25-306 O-EMT** | G 1 | G 1 | 488 | 33 | 433 | 94 | 567 | 645 | 640 | 625 | 365 | 183 | 32.5 |
| **BSM1V 1 MXV-B 25-307 O-EMT** | G 1 | G 1 | 488 | 33 | 433 | 94 | 567 | 669 | 640 | 625 | 365 | 183 | 34 |
| **BSM1V 1 MXV-B 25-308 O-EMT** | G 1 | G 1 | 488 | 33 | 433 | 94 | 567 | 693 | 640 | 625 | 365 | 183 | 35.3 |
| **BSM1V 1 MXV-B 25-310 O-EMT** | G 1 | G 1 | 488 | 33 | 433 | 94 | 567 | 741 | 640 | 625 | 365 | 183 | 37.6 |
| **BSM1V 1 MXV-B 32-504 O-EMT** | G 1 1/4 | G 1 1/4 | 528 | 45 | 463 | 94 | 617 | 597 | 662 | 625 | 365 | 183 | 34 |
| **BSM1V 1 MXV-B 32-505 O-EMT** | G 1 1/4 | G 1 1/4 | 528 | 45 | 463 | 94 | 617 | 621 | 662 | 625 | 365 | 183 | 34.6 |
| **BSM1V 1 MXV-B 32-506 O-EMT** | G 1 1/4 | G 1 1/4 | 528 | 45 | 463 | 94 | 617 | 645 | 662 | 625 | 365 | 183 | 36 |
| **BSM1V 1 MXV-B 32-507 O-EMT** | G 1 1/4 | G 1 1/4 | 528 | 45 | 463 | 94 | 617 | 669 | 662 | 625 | 365 | 183 | 37.9 |
| **BSM1V 1 MXV-B 32-508 O-EMT** | G 1 1/4 | G 1 1/4 | 528 | 45 | 463 | 94 | 617 | 733 | 662 | 625 | 365 | 183 | 48 |
| **BSM1V 1 MXV-B 32-510 O-EMT** | G 1 1/4 | G 1 1/4 | 528 | 45 | 463 | 94 | 617 | 781 | 662 | 625 | 365 | 183 | 49.5 |
| **BSM1V 1 MXV-B 40-904 O-EMT** | G 1 1/2 | G 1 1/2 | 590 | 46.5 | 547 | 94 | 734 | 65 | 712 | 625 | 365 | 183 | 40 |
| **BSM1V 1 MXV-B 40-905 O-EMT** | G 1 1/2 | G 1 1/2 | 590 | 46.5 | 547 | 94 | 734 | 715 | 712 | 625 | 365 | 183 | 44 |
| **BSM1V 1 MXV-B 40-906 O-EMT** | G 1 1/2 | G 1 1/2 | 590 | 46.5 | 547 | 94 | 734 | 745 | 712 | 625 | 365 | 183 | 54.5 |

Non-binding dimensions to be checked when ordering
Anti-vibration kit supplied disassembled as standard

# BS. MXV-B

## Dimensions and weights

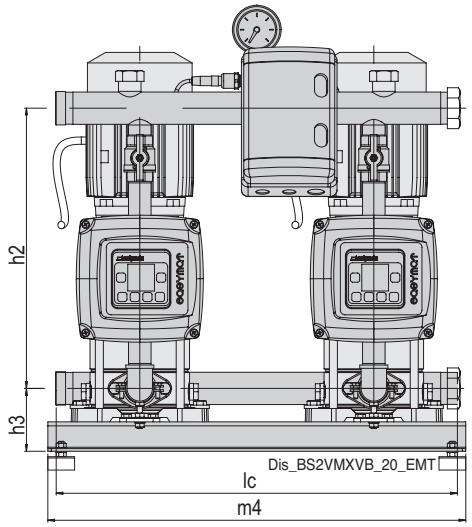


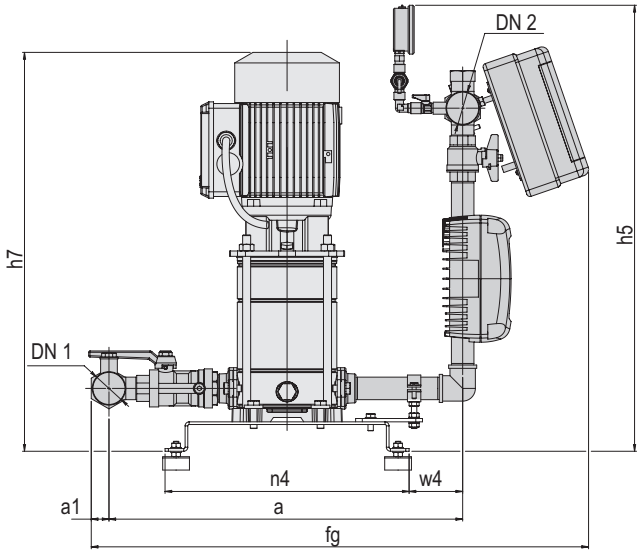


| TYPE | Manifolds | | mm | | | | | | | | | | | Kg |
|---|---|---|---|---|---|---|---|---|---|---|---|---|---|---|
| | DN1 | DN2 | a | a1 | fG | h2 | h3 | h5 | h7 | lc | m4 | n4 | w4 | Weight |
| BSM2V 2 MXV-B 25-304 O-EMT | G 1 1/2 | G 1 1/2 | 529 | 26.5 | 744 | 420 | 94 | 667 | 597 | 600 | 625 | 365 | 80 | 70.4 |
| BSM2V 2 MXV-B 25-305 O-EMT | G 1 1/2 | G 1 1/2 | 529 | 26.5 | 744 | 420 | 94 | 667 | 621 | 600 | 625 | 365 | 80 | 71.3 |
| BSM2V 2 MXV-B 25-306 O-EMT | G 1 1/2 | G 1 1/2 | 529 | 26.5 | 744 | 420 | 94 | 667 | 645 | 600 | 625 | 365 | 80 | 81 |
| BSM2V 2 MXV-B 25-307 O-EMT | G 1 1/2 | G 1 1/2 | 529 | 26.5 | 744 | 420 | 94 | 667 | 669 | 600 | 625 | 365 | 80 | 81.6 |
| BSM2V 2 MXV-B 25-308 O-EMT | G 1 1/2 | G 1 1/2 | 529 | 26.5 | 744 | 420 | 94 | 667 | 693 | 600 | 625 | 365 | 80 | 82.4 |
| BSM2V 2 MXV-B 25-310 O-EMT | G 1 1/2 | G 1 1/2 | 529 | 26.5 | 744 | 420 | 94 | 667 | 741 | 600 | 625 | 365 | 80 | 85.4 |
| BSM2V 2 MXV-B 32-504 O-EMT | G 2 | G 2 | 571 | 32 | 795 | 443 | 94 | 690 | 597 | 600 | 625 | 365 | 97 | 80.6 |
| BSM2V 2 MXV-B 32-505 O-EMT | G 2 | G 2 | 571 | 32 | 795 | 443 | 94 | 690 | 621 | 600 | 625 | 365 | 97 | 78.9 |
| BSM2V 2 MXV-B 32-506 O-EMT | G 2 | G 2 | 571 | 32 | 795 | 443 | 94 | 690 | 645 | 600 | 625 | 365 | 97 | 86.7 |
| BSM2V 2 MXV-B 32-507 O-EMT | G 2 | G 2 | 571 | 32 | 795 | 443 | 94 | 690 | 669 | 600 | 625 | 365 | 97 | 89.5 |
| BSM2V 2 MXV-B 32-508 O-EMT | G 2 | G 2 | 571 | 32 | 795 | 443 | 94 | 690 | 733 | 600 | 625 | 365 | 97 | 92.7 |
| BSM2V 2 MXV-B 32-510 O-EMT | G 2 | G 2 | 571 | 32 | 795 | 443 | 94 | 690 | 781 | 600 | 625 | 365 | 97 | 94.6 |
| BSM2V 2 MXV-B 40-904 O-EMT | G 2 1/2 | G 2 1/2 | 645 | 40 | 900 | 479 | 124 | 757 | 645 | 600 | 625 | 365 | 114 | 93.5 |
| BSM2V 2 MXV-B 40-905 O-EMT | G 2 1/2 | G 2 1/2 | 645 | 40 | 900 | 479 | 124 | 757 | 715 | 600 | 625 | 365 | 114 | 99.7 |
| BSM2V 2 MXV-B 40-906 O-EMT | G 2 1/2 | G 2 1/2 | 645 | 40 | 900 | 479 | 124 | 757 | 745 | 600 | 625 | 365 | 114 | 102.8 |

Non-binding dimensions to be checked when ordering
Anti-vibration kit supplied disassembled as standard

# BS. MXV-B

## Dimensions and weights

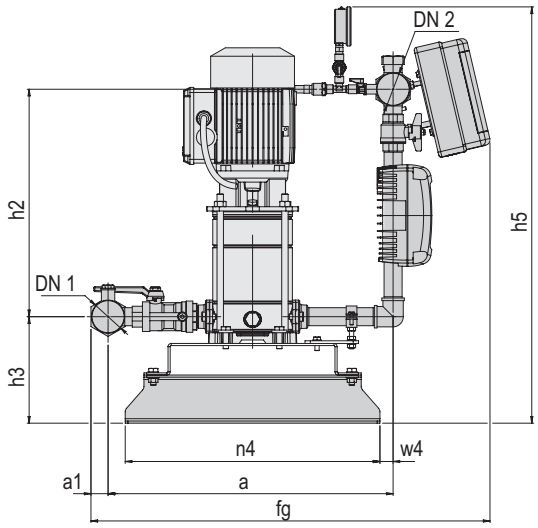


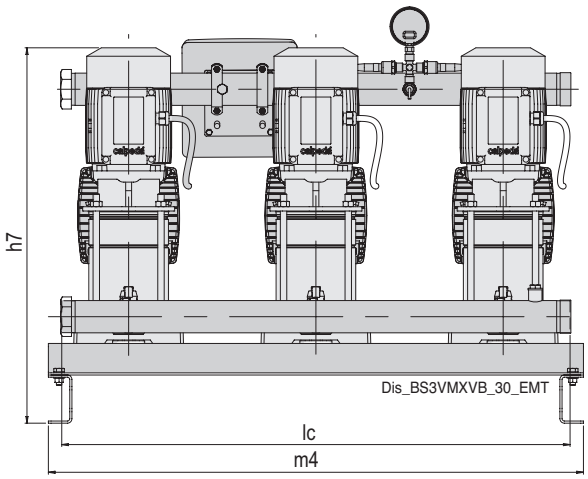


| TYPE | Manifolds | | mm | | | | | | | | | | | Kg |
|---|---|---|---|---|---|---|---|---|---|---|---|---|---|---|
| | DN1 | DN2 | a | a1 | fG | h2 | h3 | h5 | h7 | lc | m4 | n4 | w4 | Weight |
| BSM3V 3 MXV-B 25-304 O-EMT | G 2 | G 2 | 533 | 32 | 746 | 423 | 199 | 776 | 702 | 950 | 1000 | 476 | 25 | - |
| BSM3V 3 MXV-B 25-305 O-EMT | G 2 | G 2 | 533 | 32 | 746 | 423 | 199 | 776 | 726 | 950 | 1000 | 476 | 25 | 116.4 |
| BSM3V 3 MXV-B 25-306 O-EMT | G 2 | G 2 | 533 | 32 | 746 | 423 | 199 | 776 | 750 | 950 | 1000 | 476 | 25 | - |
| BSM3V 3 MXV-B 25-307 O-EMT | G 2 | G 2 | 533 | 32 | 746 | 423 | 199 | 776 | 774 | 950 | 1000 | 476 | 25 | - |
| BSM3V 3 MXV-B 25-308 O-EMT | G 2 | G 2 | 533 | 32 | 746 | 423 | 199 | 776 | 798 | 950 | 1000 | 476 | 25 | - |
| BSM3V 3 MXV-B 25-310 O-EMT | G 2 | G 2 | 533 | 32 | 746 | 423 | 199 | 776 | 846 | 950 | 1000 | 476 | 25 | - |
| BSM3V 3 MXV-B 32-504 O-EMT | G 2 1/2 | G 2 1/2 | 579 | 40 | 814 | 451 | 199 | 803 | 702 | 950 | 1000 | 476 | 42 | - |
| BSM3V 3 MXV-B 32-505 O-EMT | G 2 1/2 | G 2 1/2 | 579 | 40 | 814 | 451 | 199 | 803 | 726 | 950 | 1000 | 476 | 42 | - |
| BSM3V 3 MXV-B 32-506 O-EMT | G 2 1/2 | G 2 1/2 | 579 | 40 | 814 | 451 | 199 | 803 | 750 | 950 | 1000 | 476 | 42 | - |
| BSM3V 3 MXV-B 32-507 O-EMT | G 2 1/2 | G 2 1/2 | 579 | 40 | 814 | 451 | 199 | 803 | 774 | 950 | 1000 | 476 | 42 | - |
| BSM3V 3 MXV-B 32-508 O-EMT | G 2 1/2 | G 2 1/2 | 579 | 40 | 814 | 451 | 199 | 803 | 838 | 950 | 1000 | 476 | 42 | - |
| BSM3V 3 MXV-B 32-510 O-EMT | G 2 1/2 | G 2 1/2 | 579 | 40 | 814 | 451 | 199 | 803 | 886 | 950 | 1000 | 476 | 42 | 153 |
| BSM3V 3 MXV-B 40-904 O-EMT | G 3 | G 3 | 746 | 48 | 908 | 485 | 229 | 868 | 750 | 950 | 1000 | 476 | 59 | 150 |
| BSM3V 3 MXV-B 40-905 O-EMT | G 3 | G 3 | 746 | 48 | 908 | 485 | 229 | 868 | 820 | 950 | 1000 | 476 | 59 | - |
| BSM3V 3 MXV-B 40-906 O-EMT | G 3 | G 3 | 746 | 48 | 908 | 485 | 229 | 868 | 850 | 950 | 1000 | 476 | 59 | 166 |

Non-binding dimensions to be checked when ordering

# BS. MXV-B

## Dimensions and weights

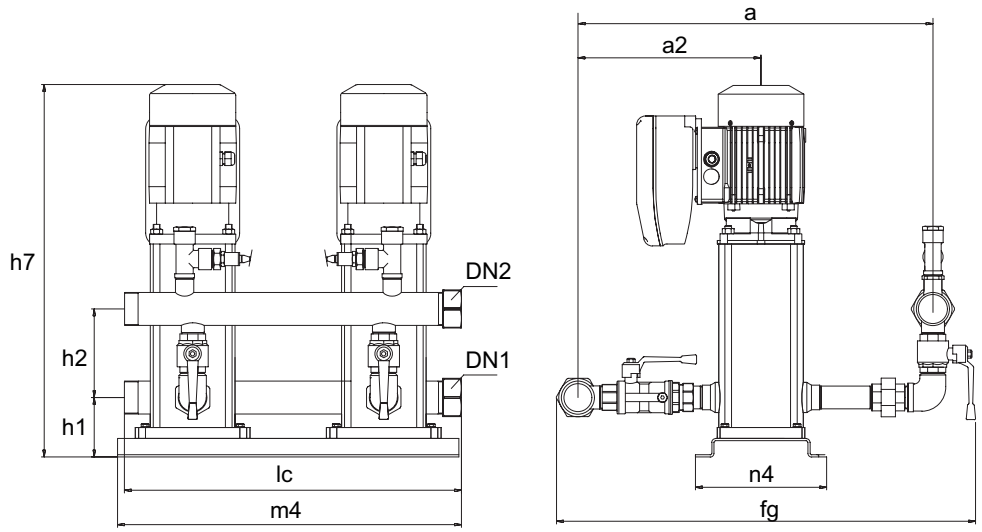


| TYPE | Manifolds | | mm | | | | | | | | | Kg |
|---|---|---|---|---|---|---|---|---|---|---|---|---|
| | DN1 | DN2 | a | a2 | fG | h1 | h2 | h7 | lc | m4 | n4 | Weight |
| **BSM2V 2 MXV-B 25-304 O-EMT2** | G 2 | G 1 1/2 | 647 | 315 | 700 | 109 | 169 | 597 | 600 | 625 | 240 | - |
| **BSM2V 2 MXV-B 25-305 O-EMT2** | G 2 | G 1 1/2 | 647 | 315 | 700 | 109 | 169 | 621 | 600 | 625 | 240 | - |
| **BSM2V 2 MXV-B 25-306 O-EMT2** | G 2 | G 1 1/2 | 647 | 315 | 700 | 109 | 169 | 645 | 600 | 625 | 240 | - |
| **BSM2V 2 MXV-B 25-307 O-EMT2** | G 2 | G 1 1/2 | 647 | 315 | 700 | 109 | 169 | 669 | 600 | 625 | 240 | - |
| **BSM2V 2 MXV-B 25-308 O-EMT2** | G 2 | G 1 1/2 | 647 | 315 | 700 | 118 | 169 | 693 | 600 | 625 | 365 | - |
| **BSM2V 2 MXV-B 25-310 O-EMT2** | G 2 | G 1 1/2 | 647 | 315 | 700 | 118 | 169 | 741 | 600 | 625 | 365 | - |
| **BSM2V 2 MXV-B 32-504 O-EMT2** | G 2 | G 2 | 683 | 345 | 748 | 118 | 188 | 597 | 600 | 625 | 365 | - |
| **BSM2V 2 MXV-B 32-505 O-EMT2** | G 2 | G 2 | 683 | 345 | 748 | 118 | 188 | 621 | 600 | 625 | 365 | - |
| **BSM2V 2 MXV-B 32-506 O-EMT2** | G 2 | G 2 | 683 | 345 | 748 | 118 | 188 | 645 | 600 | 625 | 365 | - |
| **BSM2V 2 MXV-B 32-507 O-EMT2** | G 2 | G 2 | 683 | 345 | 748 | 118 | 188 | 669 | 600 | 625 | 365 | - |
| **BSM2V 2 MXV-B 32-508 O-EMT2** | G 2 | G 2 | 683 | 345 | 748 | 118 | 188 | 733 | 600 | 625 | 365 | - |
| **BSM2V 2 MXV-B 32-510 O-EMT2** | G 2 | G 2 | 683 | 345 | 748 | 118 | 188 | 781 | 600 | 625 | 365 | - |
| **BSM2V 2 MXV-B 40-904 O-EMT2** | G 2 1/2 | G 2 1/2 | 773 | 425 | 841 | 138 | 215 | 645 | 600 | 1000 | 365 | - |
| **BSM2V 2 MXV-B 40-905 O-EMT2** | G 2 1/2 | G 2 1/2 | 773 | 425 | 841 | 138 | 215 | 715 | 600 | 1000 | 365 | - |
| **BSM2V 2 MXV-B 40-906 O-EMT2** | G 2 1/2 | G 2 1/2 | 773 | 425 | 841 | 138 | 215 | 745 | 600 | 1000 | 365 | 102 |

Non-binding dimensions to be checked when ordering

# BS. MXV-B

## Dimensions and weights

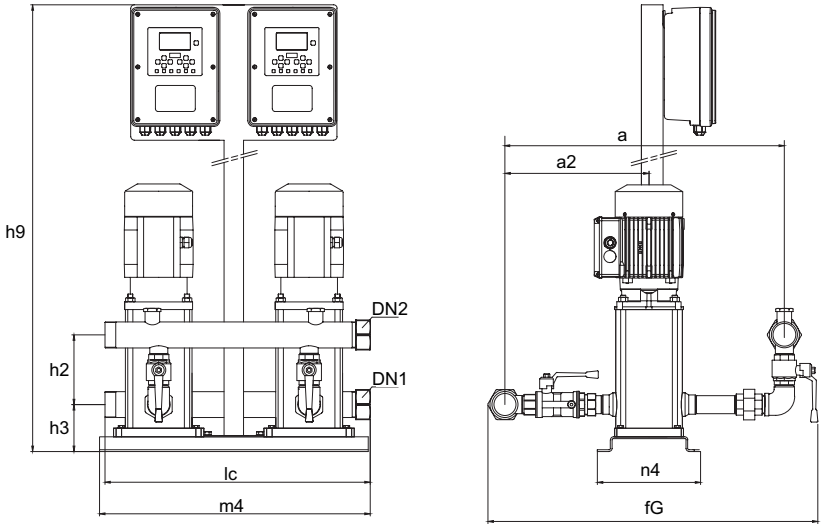


| TYPE | Manifolds | | mm | | | | | | | | | Kg |
|---|---|---|---|---|---|---|---|---|---|---|---|---|
| | DN1 | DN2 | a | a2 | fG | h2 | h3 | h9 | lc | m4 | n4 | Weight |
| BS2V 2 MXV-B 25-304 O-WALL | G 2 | G 1 1/2 | 647 | 315 | 700 | 169 | 109 | 1384 | 600 | 625 | 240 | - |
| BS2V 2 MXV-B 25-305 O-WALL | G 2 | G 1 1/2 | 647 | 315 | 700 | 169 | 109 | 1384 | 600 | 625 | 240 | - |
| BS2V 2 MXV-B 25-306 O-WALL | G 2 | G 1 1/2 | 647 | 315 | 700 | 169 | 109 | 1384 | 600 | 625 | 240 | - |
| BS2V 2 MXV-B 25-307 O-WALL | G 2 | G 1 1/2 | 647 | 315 | 700 | 169 | 109 | 1384 | 600 | 625 | 240 | - |
| BS2V 2 MXV-B 25-308 O-WALL | G 2 | G 1 1/2 | 647 | 315 | 700 | 169 | 109 | 1384 | 600 | 625 | 240 | - |
| BS2V 2 MXV-B 25-310 O-WALL | G 2 | G 1 1/2 | 647 | 315 | 700 | 169 | 109 | 1384 | 600 | 625 | 240 | - |
| BS2V 2 MXV-B 32-504 O-WALL | G 2 | G 2 | 683 | 345 | 748 | 188 | 118 | 1393 | 600 | 625 | 365 | - |
| BS2V 2 MXV-B 32-505 O-WALL | G 2 | G 2 | 683 | 345 | 748 | 188 | 118 | 1393 | 600 | 625 | 365 | - |
| BS2V 2 MXV-B 32-506 O-WALL | G 2 | G 2 | 683 | 345 | 748 | 188 | 118 | 1393 | 600 | 625 | 365 | - |
| BS2V 2 MXV-B 32-507 O-WALL | G 2 | G 2 | 683 | 345 | 748 | 188 | 118 | 1393 | 600 | 625 | 365 | 100 |
| BS2V 2 MXV-B 32-508 O-WALL | G 2 | G 2 | 683 | 345 | 748 | 188 | 118 | 1393 | 600 | 625 | 365 | 122 |
| BS2V 2 MXV-B 32-510 O-WALL | G 2 | G 2 | 683 | 345 | 748 | 188 | 118 | 1393 | 600 | 625 | 365 | - |
| BS2V 2 MXV-B 40-904 O-WALL | G 2 1/2 | G 2 1/2 | 773 | 425 | 841 | 215 | 138 | 1393 | 600 | 1000 | 365 | - |
| BS2V 2 MXV-B 40-905 O-WALL | G 2 1/2 | G 2 1/2 | 773 | 425 | 841 | 215 | 138 | 1393 | 600 | 1000 | 365 | - |
| BS2V 2 MXV-B 40-906 O-WALL | G 2 1/2 | G 2 1/2 | 773 | 425 | 841 | 215 | 138 | 1393 | 600 | 1000 | 365 | 120 |
| BS2V 2 MXV-B 40-907 O-WALL | G 2 1/2 | G 2 1/2 | 773 | 425 | 841 | 215 | 138 | 1393 | 600 | 1000 | 365 | - |
| BS2V 2 MXV-B 40-908 O-WALL | G 2 1/2 | G 2 1/2 | 773 | 425 | 841 | 215 | 138 | 1393 | 600 | 1000 | 365 | 135 |
| BS2V 2 MXV-B 40-910 O-WALL | G 2 1/2 | G 2 1/2 | 773 | 425 | 841 | 215 | 138 | 1393 | 600 | 1000 | 365 | - |
| BS2V 2 MXV-B 50-1503 O-WALL | G 3 | G 3 | 793 | 479 | 888 | 148 | 148 | 1408 | 600 | 1000 | 406 | - |
| BS2V 2 MXV-B 50-1504 O-WALL | G 3 | G 3 | 793 | 479 | 888 | 148 | 148 | 1408 | 600 | 1000 | 406 | - |
| BS2V 2 MXV-B 50-1505 O-WALL | G 3 | G 3 | 793 | 479 | 888 | 148 | 148 | 1408 | 600 | 1000 | 406 | - |
| BS2V 2 MXV-B 50-1506 O-WALL | G 3 | G 3 | 793 | 479 | 888 | 148 | 148 | 1408 | 600 | 1000 | 406 | - |
| BS2V 2 MXV-B 50-1507 O-WALL | G 3 | G 3 | 793 | 479 | 888 | 148 | 148 | 1408 | 600 | 1000 | 406 | - |

Non-binding dimensions to be checked when ordering

# BS. MXV

Pressure units with 1 to 3 multi-stage vertical, fixed or variable speed pumps (INVERTER)

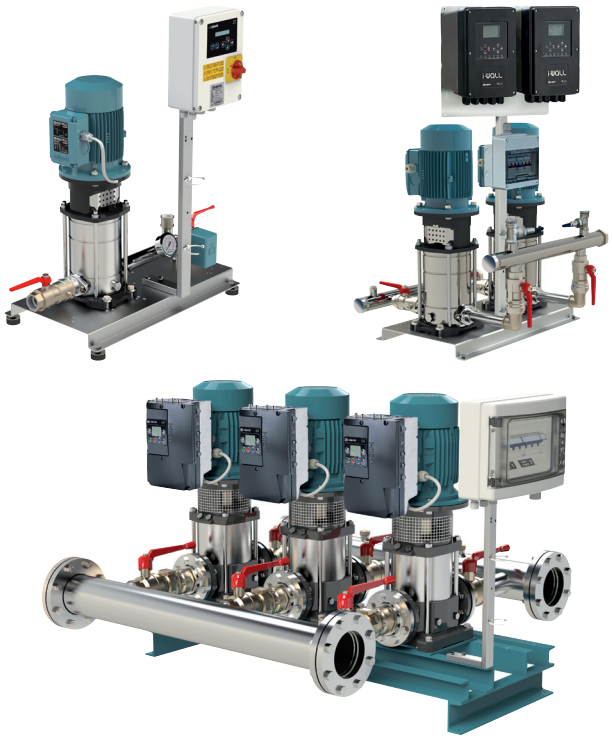

## Coverage chart

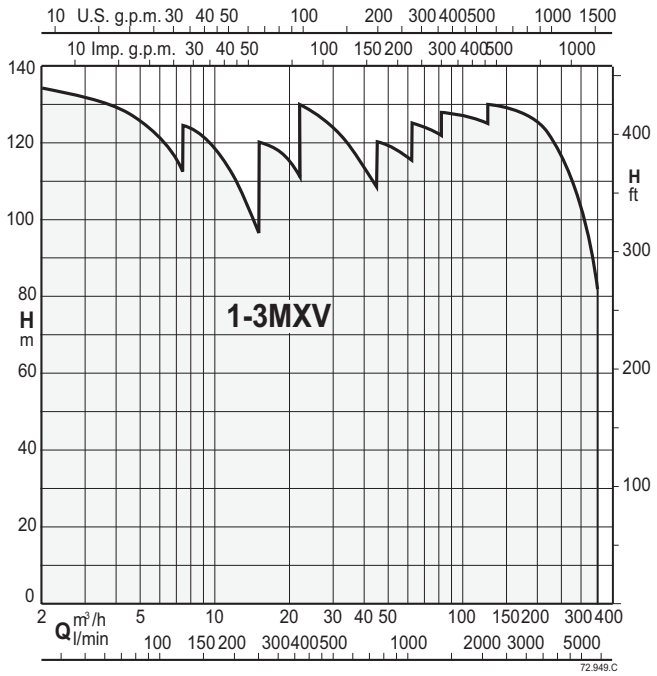


## Fixed speed units

BS 1-6F Pressure boosting sets with 1 to 6 fixed speed pump.
Sets with 4,5 and 6 pumps on request.
Depending on the reduction of the pressure in the system, the pressure switches determine the starting up of the pumps in sequence and the microprocessor alternates the starts.

## Variable speed units with I-MAT

BS2-3V Pressure boosting sets with 2 to 3 variable speed pumps (with I-MAT).
Depending on water consumption, one or more pumps are activated, all at variable speed, in order to guarantee the quantity of water required at the set pressure.

## Variable speed pump units with WALL

BS2V Pressure boosting sets with 2 variable speed pumps with WALL.
Depending on water consumption, one or more pumps are activated, all at variable speed, in order to guarantee the quantity of water required at the set pressure.

## Construction

Automatic pressure boosting plant consisting of 1 to 6 vertical multistage pumps complete with ball, non return valve on the suction side and ball valves on the delivery side.
Suction and delivery manifolds made of 1.4301 EN 10088 (AISI 304) for units with 2 and 3 pumps.
Set up for mounting cylindrical tanks with G1 connection.
Electrical control boards:

- with microprocessor control for fixed speed pumps. Motor starting is direct up to 5.5 kW and Y/Δ for powers from 7.5 to 37 kW.
- - with frequency converter for variable speed pump units.

The unit includes one pressure gauge and three adjustable differential pressure switches or pressure transducer.

## Applications

To supply water in civil and industrial buildings.
For increasing network pressure (follow local specifications).

## Motor

2-pole induction motors, 50 Hz, n ≈ 2900 1/min.
Three-phase
230/400V ± 10% up to a 3 kW
set up for inverter operation;
400/690V ± 10% for 4 kW to 37 kW,
set up for inverter operation.
Single-phase 230 V ± 10%,
Insulation class F.
IP protection: IP55
Constructed in accordance with IEC 60034.
Other voltages and frequencies on request.

## Vessels on request

When installing the unit, connect in the delivery section to a diaphragm or galvanised tank.
The recommended sized are shown in the following page.

## Special features on request

Pressure unit with 4, 5 and 6 pumps

# BS. MXV

calpeda®

## Characteristic curves

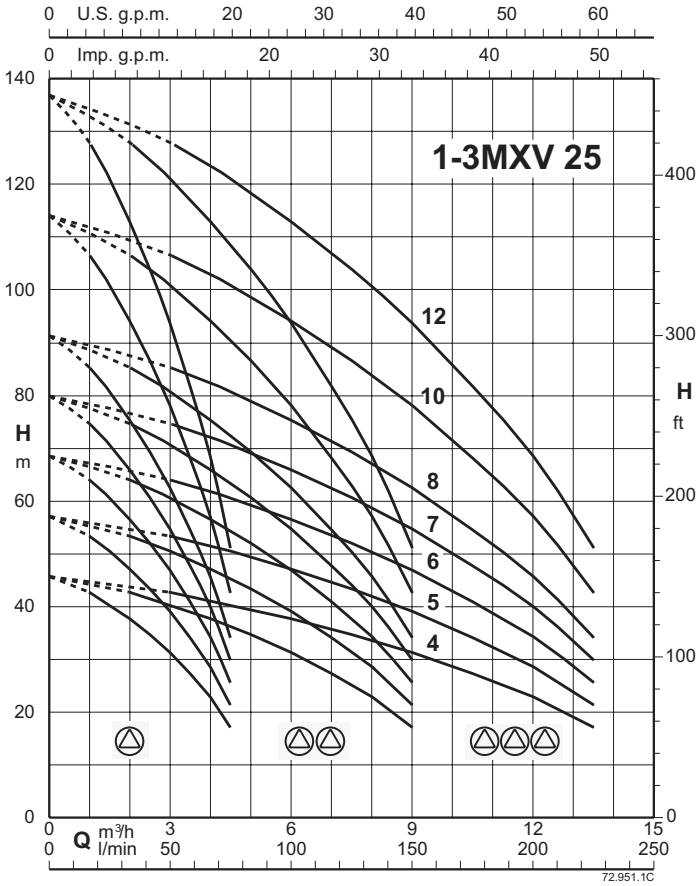


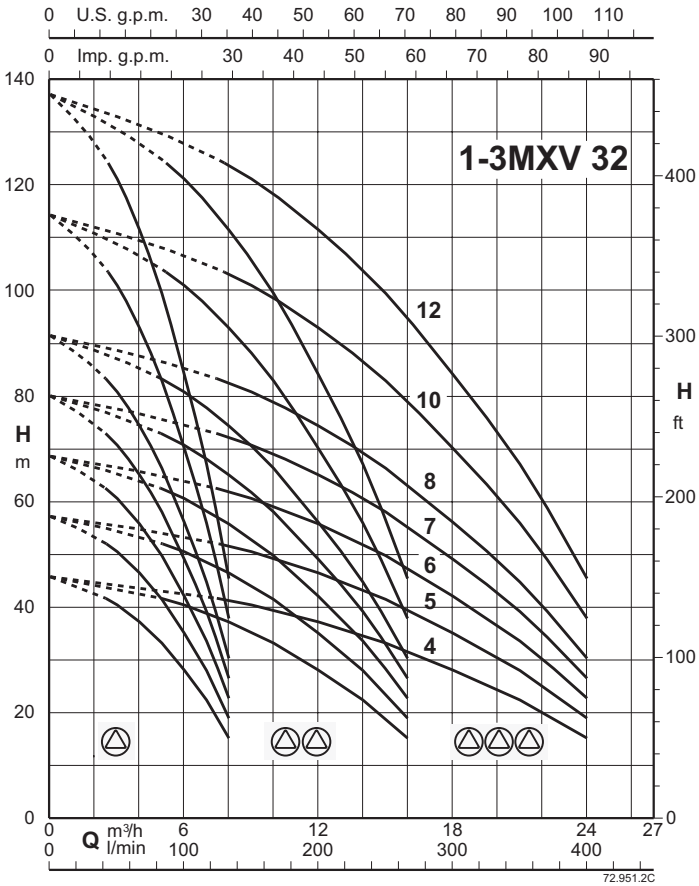


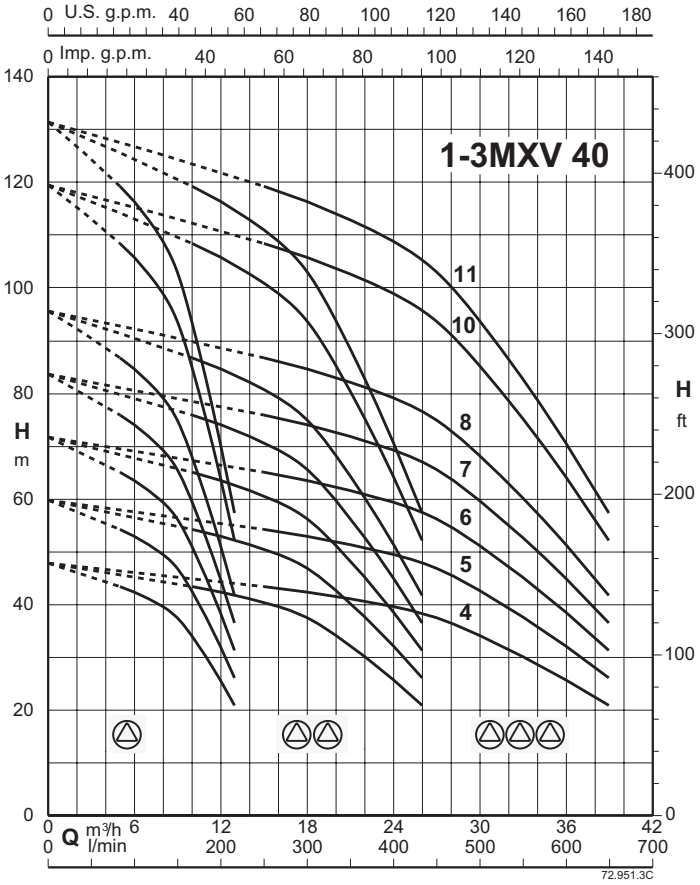

# BS. MXV

calpeda

## Characteristic curves

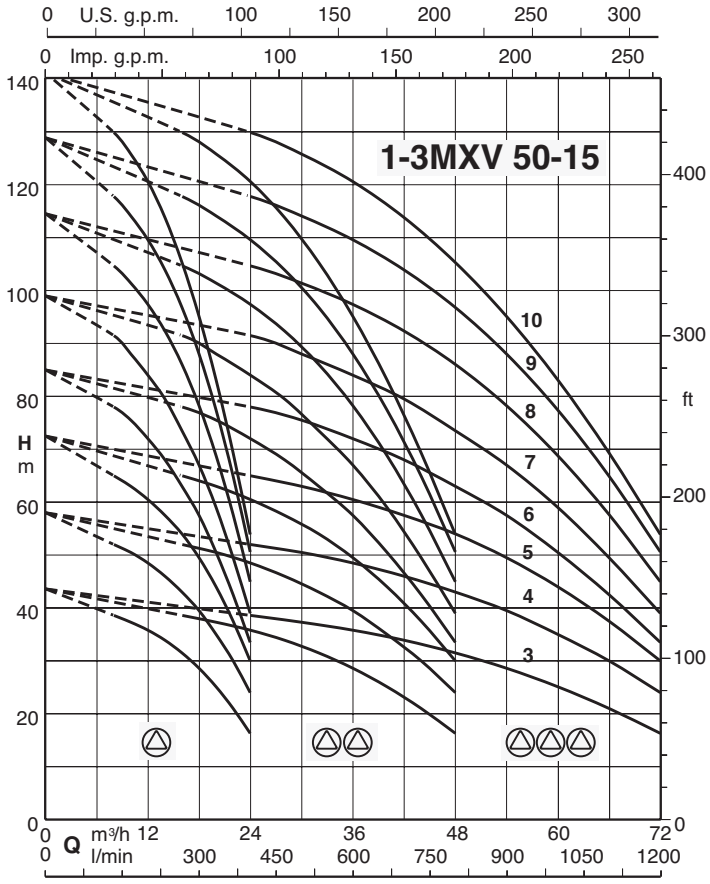


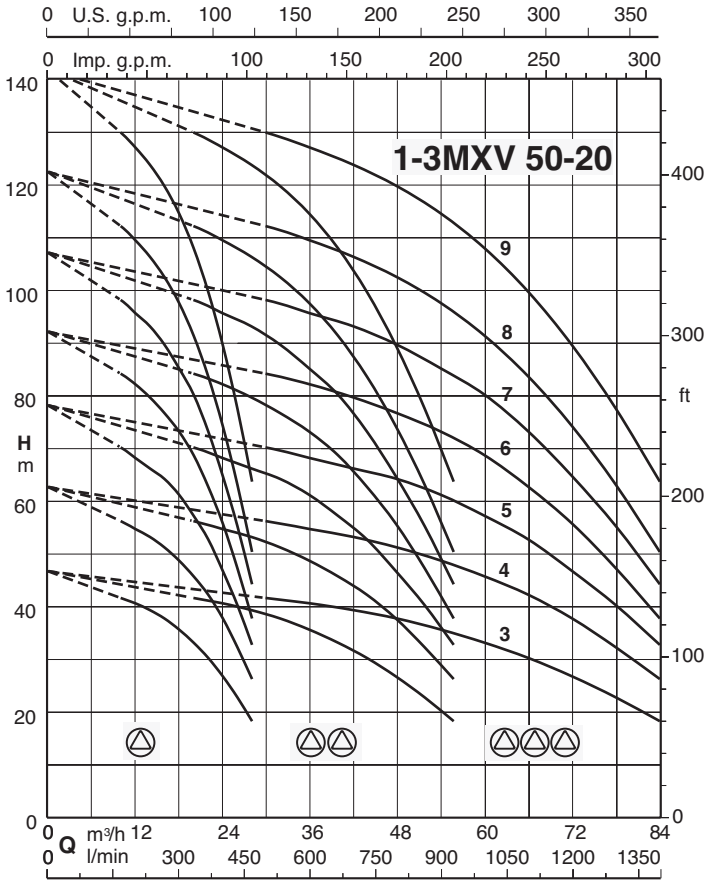


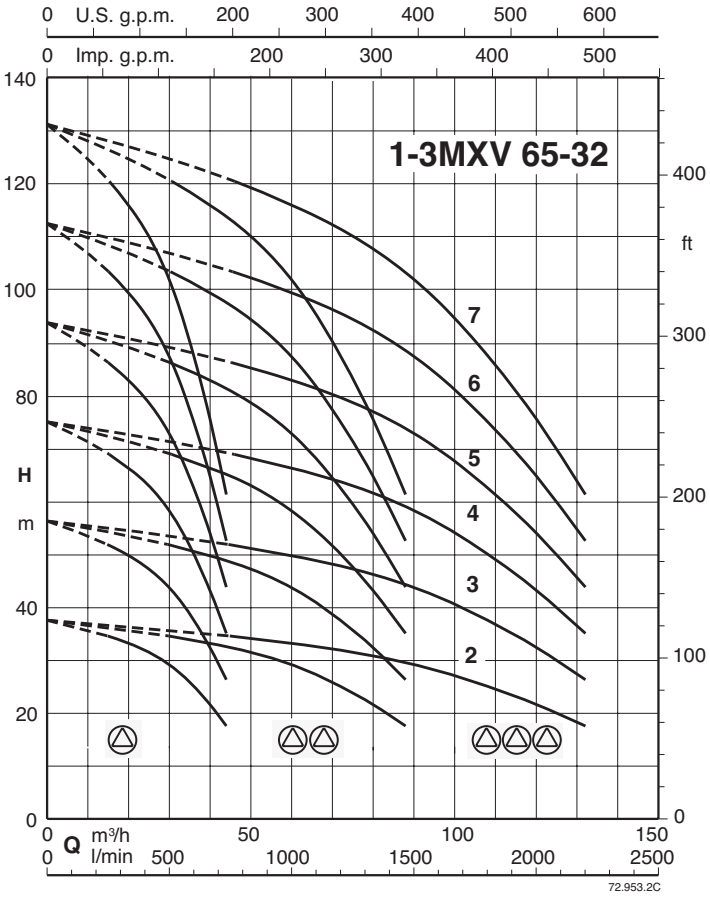


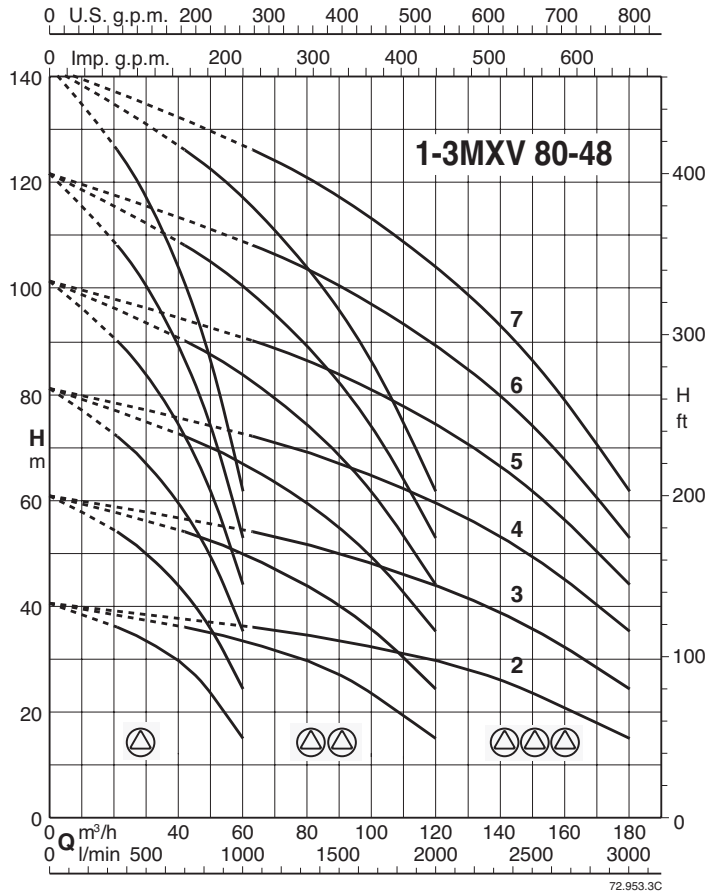

# BS. MXV

## Characteristic curves

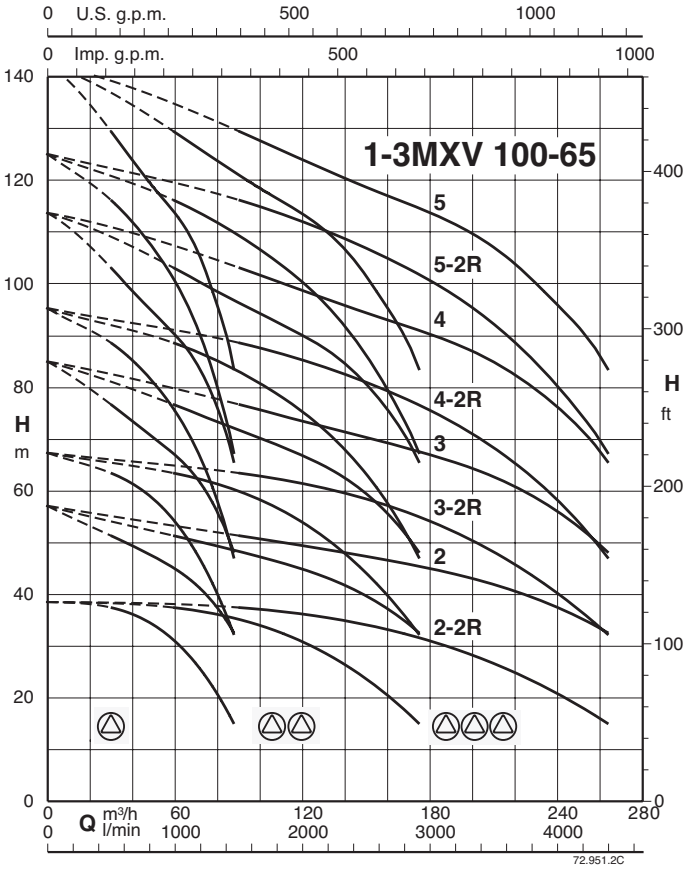


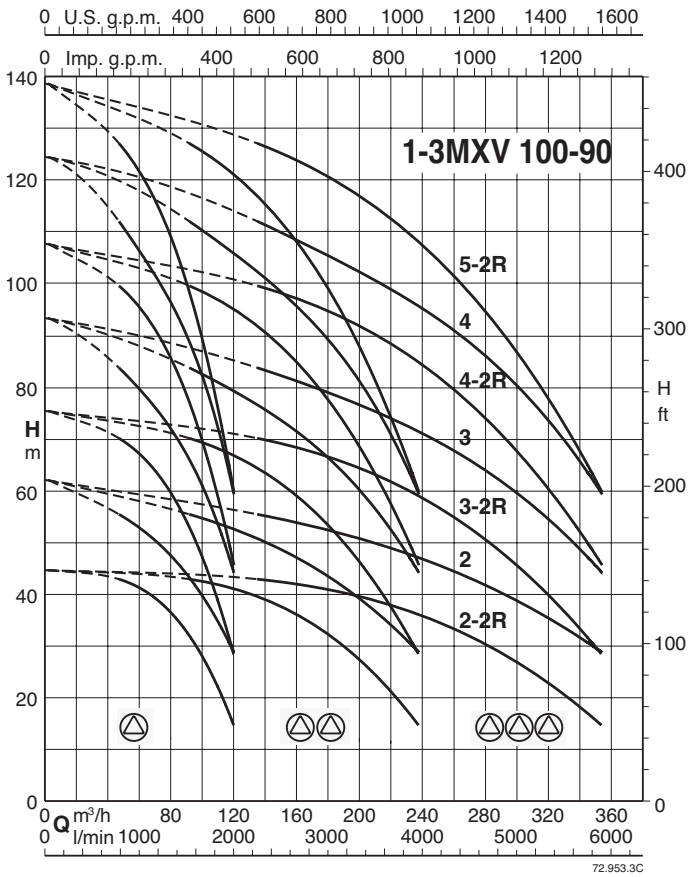

# BS. MXV

calpeda®

**Fixed speed pump units**

**BS1F**

| | | Pressure switch | Tank | |
|---|---|---|---|---|
| | | 1 | membrane | Vessel |
| Model | P2 | Start/Stop | | |
| | kW | bar | litri | |
| BS1F 1 MXV 25-304 O | 0.75 | 3 - 3.9 | 60 | 100 |
| BS1F 1 MXV 25-305 O | 0.75 | 3.3 - 4.8 | 80 | 100 |
| BS1F 1 MXV 25-306 O | 1.1 | 4.1 - 5.8 | 80 | 100 |
| BS1F 1 MXV 25-307 O | 1.1 | 5 - 6.7 | 100 | 100 |
| BS1F 1 MXV 25-308 O | 1.5 | 5.9 - 7.8 | 100 | 100 |
| BS1F 1 MXV 25-310 O | 1.5 | 7.5 - 9.7 | 150 | 200 |
| BS1F 1 MXV 25-312 O | 2.2 | 10.1 - 11.6 | 200 | 300 |
| BS1F 1 MXV 32-504 O | 1.1 | 3 - 3.8 | 300 | 500 |
| BS1F 1 MXV 32-505 O | 1.1 | 3.2 - 4.7 | 200 | 300 |
| BS1F 1 MXV 32-506 O | 1.5 | 4 - 5.7 | 200 | 300 |
| BS1F 1 MXV 32-507 O | 1.5 | 4.9 - 6.6 | 300 | 500 |
| BS1F 1 MXV 32-508 O | 2.2 | 5.7 - 7.6 | 300 | 500 |
| BS1F 1 MXV 32-510 O | 2.2 | 7.4 - 9.5 | 200 | 300 |
| BS1F 1 MXV 32-512 O | 3 | 9.8 - 11.3 | 300 | 500 |
| BS1F 1 MXV 40-904 O | 1.5 | 3 - 3.9 | 500 | 800 |
| BS1F 1 MXV 40-905 O | 2.2 | 3.4 - 4.9 | 500 | 800 |
| BS1F 1 MXV 40-906 O | 2.2 | 4.3 - 5.9 | 500 | 800 |
| BS1F 1 MXV 40-907 O | 3 | 5.1 - 6.9 | 750 | 1000 |
| BS1F 1 MXV 40-908 O | 3 | 6 - 7.9 | 500 | 800 |
| BS1F 1 MXV 40-910 O | 4 | 7.8 - 9.9 | 500 | 1000 |
| BS1F 1 MXV 40-911 O | 4 | 9.4 - 10.9 | 1000 | 1500 |
| BS1F 1 MXV 50-1503/A | 2.2 | 2.7 - 3.5 | 750 | 1500 |
| BS1F 1 MXV 50-1504 | 3 | 3.2 - 4.7 | 750 | 1500 |
| BS1F 1 MXV 50-1505 | 4 | 4.3 - 5.9 | 750 | 1500 |
| BS1F 1 MXV 50-1506 | 5.5 | 5.3 - 7.1 | 750 | 1500 |
| BS1F 1 MXV 50-1507 | 5.5 | 6.4 - 8.3 | 750 | 1500 |
| BS1F 1 MXV 50-1508/A | 5.5 | 7.5 - 9.6 | 750 | 1500 |
| BS1F 1 MXV 50-1509 | 7.5 | 9.3 - 10.8 | 750 | 1500 |
| BS1F 1 MXV 50-1510 | 7.5 | 10.4 - 11.9 | 750 | 1500 |
| BS1F 1 MXV 50-2003 | 3 | 3 - 3.8 | 750 | 1500 |
| BS1F 1 MXV 50-2004 | 4 | 3.5 - 5.1 | 750 | 1500 |
| BS1F 1 MXV 50-2005 | 5.5 | 4.7 - 6.4 | 750 | 1500 |
| BS1F 1 MXV 50-2006 | 7.5 | 5.8 - 7.7 | 750 | 1500 |
| BS1F 1 MXV 50-2007 | 7.5 | 6.9 - 8.9 | 750 | 1500 |
| BS1F 1 MXV 50-2008 | 9.2 | 8.7 - 10.2 | 750 | 1500 |
| BS1F 1 MXV 50-2009 | 9.2 | 10.4 - 11.9 | 750 | 1500 |
| BS1F 1 MXV 65-3202/D | 4 | 2.3 - 3.1 | 2000 | 4000 |
| BS1F 1 MXV 65-3203/C | 5.5 | 3.1 - 4.7 | 2000 | 3000 |
| BS1F 1 MXV 65-3204/C | 7.5 | 4.6 - 6.3 | 2000 | 4000 |
| BS1F 1 MXV 65-3205/D | 11 | 5.9 - 7.8 | 3000 | 4000 |
| BS1F 1 MXV 65-3206/D | 11 | 7.3 - 9.4 | 3000 | 5000 |
| BS1F 1 MXV 65-3207/D | 15 | 9.5 - 11 | - | 6000 |
| BS1F 1 MXV 80-4802/C | 5.5 | 2.5 - 3.3 | 3000 | 6000 |
| BS1F 1 MXV 80-4803/C | 7.5 | 3.4 - 4.9 | 2000 | 4000 |
| BS1F 1 MXV 80-4804/D | 11 | 4.8 - 6.6 | 3000 | 5000 |
| BS1F 1 MXV 80-4805/D | 15 | 6.3 - 8.2 | - | 6000 |
| BS1F 1 MXV 80-4806/D | 15 | 7.7 - 9.8 | - | 6000 |
| BS1F 1 MXV 80-4807/E | 18.5 | 10 - 11.5 | - | 9000 |

400V 3~ power supply / 400V 3~ motor
Start and stop pressure controlled by pressure switches

**BSM1F**

| | | Pressure switch | Tank | |
|---|---|---|---|---|
| | | 1 | membrane | Vessel |
| Model | P2 | Start/Stop | | |
| | kW | bar | litri | |
| BSM1F 1 MXVM 25-304 O | 0.75 | 3 - 3.9 | 60 | 100 |
| BSM1F 1 MXVM 25-305 O | 0.75 | 3.3 - 4.8 | 80 | 100 |
| BSM1F 1 MXVM 25-306 O | 1.1 | 4.1 - 5.8 | 80 | 100 |
| BSM1F 1 MXVM 25-307 O | 1.1 | 5 - 6.7 | 100 | 100 |
| BSM1F 1 MXVM 25-308 O | 1.5 | 5.9 - 7.8 | 100 | 100 |
| BSM1F 1 MXVM 32-504 O | 1.1 | 3 - 3.8 | 300 | 500 |
| BSM1F 1 MXVM 32-505 O | 1.1 | 3.2 - 4.7 | 200 | 300 |
| BSM1F 1 MXVM 32-506 O | 1.5 | 4 - 5.7 | 200 | 300 |
| BSM1F 1 MXVM 32-507 O | 1.5 | 4.9 - 6.6 | 300 | 500 |
| BSM1F 1 MXVM 40-904 O | 1.5 | 3 - 3.9 | 500 | 800 |

230V 1~ power supply / 230V 1~ motor
Start and stop pressure controlled by a pressure transducer

# BS. MXV

calpeda

**Fixed speed pump units**

**BS2F**

| | | Pressure switch | | Tank | |
|---|---|---|---|---|---|
| | | 1 | 2 | membrane | Vessel |
| Model | P2 | Start/Stop | | | |
| | kW | bar | | litri | |
| BS2F 2 MXV 25-304 O | 0.75 X2 | 3 - 3.9 | 2.7 - 3.6 | 60 | 100 |
| BS2F 2 MXV 25-305 O | 0.75 X2 | 3.3 - 4.8 | 3 - 4.5 | 80 | 100 |
| BS2F 2 MXV 25-306 O | 1.1 X2 | 4.1 - 5.8 | 3.9 - 5.5 | 80 | 100 |
| BS2F 2 MXV 25-307 O | 1.1 X2 | 5 - 6.7 | 4.7 - 6.4 | 100 | 100 |
| BS2F 2 MXV 25-308 O | 1.5 X2 | 5.9 - 7.8 | 5.6 - 7.5 | 100 | 100 |
| BS2F 2 MXV 25-310 O | 1.5 X2 | 7.5 - 9.7 | 7.3 - 9.4 | 150 | 200 |
| BS2F 2 MXV 25-312 O | 2.2 X2 | 10.1 - 11.6 | 9.8 - 11.3 | 200 | 300 |
| BS2F 2 MXV 32-504 O | 1.1 X2 | 3 - 3.8 | 2.7 - 3.5 | 300 | 500 |
| BS2F 2 MXV 32-505 O | 1.1 X2 | 3.2 - 4.7 | 2.9 - 4.4 | 200 | 300 |
| BS2F 2 MXV 32-506 O | 1.5 X2 | 4 - 5.7 | 3.7 - 5.4 | 200 | 300 |
| BS2F 2 MXV 32-507 O | 1.5 X2 | 4.9 - 6.6 | 4.6 - 6.3 | 300 | 500 |
| BS2F 2 MXV 32-508 O | 2.2 X2 | 5.7 - 7.6 | 5.4 - 7.3 | 300 | 500 |
| BS2F 2 MXV 32-510 O | 2.2 X2 | 7.4 - 9.5 | 7.1 - 9.2 | 200 | 300 |
| BS2F 2 MXV 32-512 O | 3 X2 | 9.8 - 11.3 | 9.5 - 11 | 300 | 500 |
| BS2F 2 MXV 40-904 O | 1.5 X2 | 3 - 3.9 | 2.7 - 3.6 | 500 | 800 |
| BS2F 2 MXV 40-905 O | 2.2 X2 | 3.4 - 4.9 | 3.1 - 4.6 | 500 | 800 |
| BS2F 2 MXV 40-906 O | 2.2 X2 | 4.3 - 5.9 | 4 - 5.6 | 500 | 800 |
| BS2F 2 MXV 40-907 O | 3 X2 | 5.1 - 6.9 | 4.9 - 6.6 | 750 | 1000 |
| BS2F 2 MXV 40-908 O | 3 X2 | 6 - 7.9 | 5.7 - 7.6 | 500 | 800 |
| BS2F 2 MXV 40-910 O | 4 X2 | 7.8 - 9.9 | 7.5 - 9.6 | 500 | 1000 |
| BS2F 2 MXV 40-911 O | 4 X2 | 9.4 - 10.9 | 9.1 - 10.6 | 1000 | 1500 |
| BS2F 2 MXV 50-1503/A | 2.2 X2 | 2.7 - 3.5 | 2.4 - 3.2 | 750 | 1500 |
| BS2F 2 MXV 50-1504 | 3 X2 | 3.2 - 4.7 | 2.9 - 4.4 | 750 | 1500 |
| BS2F 2 MXV 50-1505 | 4 X2 | 4.3 - 5.9 | 4 - 5.6 | 750 | 1500 |
| BS2F 2 MXV 50-1506 | 5.5 X2 | 5.3 - 7.1 | 5 - 6.8 | 750 | 1500 |
| BS2F 2 MXV 50-1507 | 5.5 X2 | 6.4 - 8.3 | 6.1 - 8 | 750 | 1500 |
| BS2F 2 MXV 50-1508/A | 5.5 X2 | 7.5 - 9.6 | 7.2 - 9.3 | 750 | 1500 |
| BS2F 2 MXV 50-1509 | 7.5 X2 | 9.3 - 10.8 | 9 - 10.5 | 750 | 1500 |
| BS2F 2 MXV 50-1510 | 7.5 X2 | 10.4 - 11.9 | 10.1 - 11.6 | 750 | 1500 |
| BS2F 2 MXV 50-2003 | 3 X2 | 3 - 3.8 | 2.7 - 3.5 | 750 | 1500 |
| BS2F 2 MXV 50-2004 | 4 X2 | 3.5 - 5.1 | 3.3 - 4.8 | 750 | 1500 |
| BS2F 2 MXV 50-2005 | 5.5 X2 | 4.7 - 6.4 | 4.4 - 6.1 | 750 | 1500 |
| BS2F 2 MXV 50-2006 | 7.5 X2 | 5.8 - 7.7 | 5.5 - 7.4 | 750 | 1500 |
| BS2F 2 MXV 50-2007 | 7.5 X2 | 6.9 - 8.9 | 6.6 - 8.6 | 750 | 1500 |
| BS2F 2 MXV 50-2008 | 9.2 X2 | 8.7 - 10.2 | 8.4 - 9.9 | 750 | 1500 |
| BS2F 2 MXV 50-2009 | 9.2 X2 | 10.4 - 11.9 | 10.1 - 11.6 | 750 | 1500 |
| BS2F 2 MXV 65-3202/D | 4 X2 | 2.3 - 3.1 | 2 - 2.8 | 2000 | 4000 |
| BS2F 2 MXV 65-3203/C | 5.5 X2 | 3.2 - 4.7 | 2.9 - 4.4 | 2000 | 3000 |
| BS2F 2 MXV 65-3204/C | 7.5 X2 | 4.6 - 6.3 | 4.3 - 6 | 2000 | 4000 |
| BS2F 2 MXV 65-3205/D | 11 X2 | 5.9 - 7.8 | 5.7 - 7.5 | 3000 | 4000 |
| BS2F 2 MXV 65-3206/D | 11 X2 | 7.3 - 9.4 | 7 - 9.1 | 3000 | 5000 |
| BS2F 2 MXV 65-3207/D | 15 X2 | 9.5 - 11 | 9.2 - 10.7 | - | 6000 |
| BS2F 2 MXV 80-4802/C | 5.5 X2 | 2.5 - 3.3 | 2.2 - 3 | 3000 | 6000 |
| BS2F 2 MXV 80-4803/C | 7.5 X2 | 3.4 - 4.9 | 3.1 - 4.6 | 2000 | 4000 |
| BS2F 2 MXV 80-4804/D | 11 X2 | 4.8 - 6.6 | 4.5 - 6.3 | 3000 | 5000 |
| BS2F 2 MXV 80-4805/D | 15 X2 | 6.3 - 8.2 | 6 - 7.9 | - | 6000 |
| BS2F 2 MXV 80-4806/D | 15 X2 | 7.7 - 9.8 | 7.4 - 9.5 | - | 6000 |
| BS2F 2 MXV 80-4807/E | 18.5 X2 | 10 - 11.5 | 9.7 - 11.2 | - | 9000 |
| BS2F 2 MXV 100-6502-2R/A | 7.5 X2 | 2.6 - 3.4 | 2.3 - 3.1 | - | - |
| BS2F 2 MXV 100-6502/A | 11 X2 | 3.2 - 4.7 | 2.9 - 4.4 | - | - |
| BS2F 2 MXV 100-6503-2R/A | 15 X2 | 4.1 - 5.8 | 3.9 - 5.5 | - | - |
| BS2F 2 MXV 100-6503/B | 18.5 X2 | 5.1 - 6.9 | 4.9 - 6.6 | - | - |
| BS2F 2 MXV 100-6504-2R/B | 18.5 X2 | 6.1 - 8.1 | 5.9 - 7.8 | - | - |
| BS2F 2 MXV 100-6504/A | 22 X2 | 7.2 - 9.3 | 6.9 - 9 | - | - |
| BS2F 2 MXV 100-6505-2R/A | 30 X2 | 9.1 - 10.6 | 8.8 - 10.3 | - | - |
| BS2F 2 MXV 100-6505/A | 30 X2 | 10.3 - 11.8 | 10 - 11.5 | - | - |
| BS2F 2 MXV 100-9002-2R/A | 11 X2 | 3 - 3.9 | 2.7 - 3.6 | - | - |
| BS2F 2 MXV 100-9002/A | 15 X2 | 3.5 - 5.1 | 3.2 - 4.8 | - | - |
| BS2F 2 MXV 100-9003-2R/B | 18.5 X2 | 4.7 - 6.4 | 4.4 - 6.1 | - | - |
| BS2F 2 MXV 100-9003/A | 22 X2 | 5.8 - 7.7 | 5.5 - 7.4 | - | - |
| BS2F 2 MXV 100-9004-2R/A | 30 X2 | 7.1 - 9.1 | 6.8 - 8.8 | - | - |
| BS2F 2 MXV 100-9004/A | 30 X2 | 8.7 - 10.2 | 8.4 - 9.9 | - | - |
| BS2F 2 MXV 100-9005-2R/A | 37 X2 | 10.1 - 11.6 | 9.8 - 11.3 | - | - |

400V 3~ power supply / 400V 3~ motor
Start and stop pressure controlled by pressure switches

**BS3F**

| | | Transducer | Tank | |
|---|---|---|---|---|
| | | 1 | membrane | Vessel |
| Model | P2 | Start/Stop | | |
| | kW | bar | litri | |
| BS3F 3 MXV 25-304 O | 0.75 X3 | 3 - 3.9 | 60 | 100 |
| BS3F 3 MXV 25-305 O | 0.75 X3 | 3.3 - 4.8 | 80 | 100 |
| BS3F 3 MXV 25-306 O | 1.1 X3 | 4.1 - 5.8 | 80 | 100 |
| BS3F 3 MXV 25-307 O | 1.1 X3 | 5 - 6.7 | 100 | 100 |
| BS3F 3 MXV 25-308 O | 1.5 X3 | 5.9 - 7.8 | 100 | 100 |
| BS3F 3 MXV 25-310 O | 1.5 X3 | 7.5 - 9.7 | 150 | 200 |
| BS3F 3 MXV 25-312 O | 2.2 X3 | 10.1 - 11.6 | 200 | 300 |
| BS3F 3 MXV 32-504 O | 1.1 X3 | 3 - 3.8 | 300 | 500 |
| BS3F 3 MXV 32-505 O | 1.1 X3 | 3.2 - 4.7 | 200 | 300 |
| BS3F 3 MXV 32-506 O | 1.5 X3 | 4 - 5.7 | 200 | 300 |
| BS3F 3 MXV 32-507 O | 1.5 X3 | 4.9 - 6.6 | 300 | 500 |
| BS3F 3 MXV 32-508 O | 2.2 X3 | 5.7 - 7.6 | 300 | 500 |
| BS3F 3 MXV 32-510 O | 2.2 X3 | 7.4 - 9.5 | 200 | 300 |
| BS3F 3 MXV 32-512 O | 3 X3 | 9.8 - 11.3 | 300 | 500 |
| BS3F 3 MXV 40-904 O | 1.5 X3 | 3 - 3.9 | 500 | 800 |
| BS3F 3 MXV 40-905 O | 2.2 X3 | 3.4 - 4.9 | 500 | 800 |
| BS3F 3 MXV 40-906 O | 2.2 X3 | 4.3 - 5.9 | 500 | 800 |
| BS3F 3 MXV 40-907 O | 3 X3 | 5.1 - 6.9 | 750 | 1000 |
| BS3F 3 MXV 40-908 O | 3 X3 | 6 - 7.9 | 500 | 800 |
| BS3F 3 MXV 40-910 O | 4 X3 | 7.8 - 9.9 | 500 | 1000 |
| BS3F 3 MXV 40-911 O | 4 X3 | 9.4 - 10.9 | 1000 | 1500 |
| BS3F 3 MXV 50-1503/A | 2.2 X3 | 2.7 - 3.5 | 750 | 1500 |
| BS3F 3 MXV 50-1504 | 3 X3 | 3.2 - 4.7 | 750 | 1500 |
| BS3F 3 MXV 50-1505 | 4 X3 | 4.3 - 5.9 | 750 | 1500 |
| BS3F 3 MXV 50-1506 | 5.5 X3 | 5.3 - 7.1 | 750 | 1500 |
| BS3F 3 MXV 50-1507 | 5.5 X3 | 6.4 - 8.3 | 750 | 1500 |
| BS3F 3 MXV 50-1508/A | 5.5 X3 | 7.5 - 9.6 | 750 | 1500 |
| BS3F 3 MXV 50-1509 | 7.5 X3 | 9.3 - 10.8 | 750 | 1500 |
| BS3F 3 MXV 50-1510 | 7.5 X3 | 10.4 - 11.9 | 750 | 1500 |
| BS3F 3 MXV 50-2003 | 3 X3 | 3 - 3.8 | 750 | 1500 |
| BS3F 3 MXV 50-2004 | 4 X3 | 3.5 - 5.1 | 750 | 1500 |
| BS3F 3 MXV 50-2005 | 5.5 X3 | 4.7 - 6.4 | 750 | 1500 |
| BS3F 3 MXV 50-2006 | 7.5 X3 | 5.8 - 7.7 | 750 | 1500 |
| BS3F 3 MXV 50-2007 | 7.5 X3 | 6.9 - 8.9 | 750 | 1500 |
| BS3F 3 MXV 50-2008 | 9.2 X3 | 8.7 - 10.2 | 750 | 1500 |
| BS3F 3 MXV 50-2009 | 9.2 X3 | 10.4 - 11.9 | 750 | 1500 |
| BS3F 3 MXV 65-3202/D | 4 X3 | 2.3 - 3.1 | 2000 | 4000 |
| BS3F 3 MXV 65-3203/C | 5.5 X3 | 3.2 - 4.7 | 2000 | 3000 |
| BS3F 3 MXV 65-3204/C | 7.5 X3 | 4.6 - 6.3 | 2000 | 4000 |
| BS3F 3 MXV 65-3205/D | 11 X3 | 5.9 - 7.8 | 3000 | 4000 |
| BS3F 3 MXV 65-3206/D | 11 X3 | 7.3 - 9.4 | 3000 | 5000 |
| BS3F 3 MXV 65-3207/D | 15 X3 | 9.5 - 11 | - | 6000 |
| BS3F 3 MXV 80-4802/C | 5.5 X3 | 2.5 - 3.3 | 3000 | 6000 |
| BS3F 3 MXV 80-4803/C | 7.5 X3 | 3.4 - 4.9 | 2000 | 4000 |
| BS3F 3 MXV 80-4804/D | 11 X3 | 4.8 - 6.6 | 3000 | 5000 |
| BS3F 3 MXV 80-4805/D | 15 X3 | 6.3 - 8.2 | - | 6000 |
| BS3F 3 MXV 80-4806/D | 15 X3 | 7.7 - 9.8 | - | 6000 |
| BS3F 3 MXV 80-4807/E | 18.5 X3 | 10 - 11.5 | - | 9000 |
| BS3F 3 MXV 100-6502-2R/A | 7.5 X3 | 2.6 - 3.4 | - | - |
| BS3F 3 MXV 100-6502/A | 11 X3 | 3.2 - 4.7 | - | - |
| BS3F 3 MXV 100-6503-2R/A | 15 X3 | 4.1 - 5.8 | - | - |
| BS3F 3 MXV 100-6503/B | 18.5 X3 | 5.1 - 6.9 | - | - |
| BS3F 3 MXV 100-6504-2R/B | 18.5 X3 | 6.1 - 8.1 | - | - |
| BS3F 3 MXV 100-6504/A | 22 X3 | 7.2 - 9.3 | - | - |
| BS3F 3 MXV 100-6505-2R/A | 30 X3 | 9.1 - 10.6 | - | - |
| BS3F 3 MXV 100-6505/A | 30 X3 | 10.3 - 11.8 | - | - |
| BS3F 3 MXV 100-9002-2R/A | 11 X3 | 3 - 3.9 | - | - |
| BS3F 3 MXV 100-9002/A | 15 X3 | 3.6 - 5.1 | - | - |
| BS3F 3 MXV 100-9003-2R/B | 18.5 X3 | 4.7 - 6.4 | - | - |
| BS3F 3 MXV 100-9003/A | 22 X3 | 5.8 - 7.7 | - | - |
| BS3F 3 MXV 100-9004-2R/A | 30 X3 | 7.1 - 9.1 | - | - |
| BS3F 3 MXV 100-9004/A | 30 X3 | 8.7 - 10.2 | - | - |
| BS3F 3 MXV 100-9005-2R/A | 37 X3 | 10.1 - 11.6 | - | - |

400V 3~ power supply / 400V 3~ motor
Start and stop pressure controlled by a pressure transducer

# BS. MXV

calpeda

**Variable speed pump units with I-MAT**

**BSM2V ..-ITT**

| Model | P2 |
|---|---|
| | kW |
| BS2V 2 MXV 25-304 O-ITT | 0.75 X2 |
| BS2V 2 MXV 25-305 O-ITT | 0.75 X2 |
| BS2V 2 MXV 25-306 O-ITT | 1.1 X2 |
| BS2V 2 MXV 25-307 O-ITT | 1.1 X2 |
| BS2V 2 MXV 25-308 O-ITT | 1.5 X2 |
| BS2V 2 MXV 25-310 O-ITT | 1.5 X2 |
| BS2V 2 MXV 25-312 O-ITT | 2.2 X2 |
| BS2V 2 MXV 32-504 O-ITT | 1.1 X2 |
| BS2V 2 MXV 32-505 O-ITT | 1.1 X2 |
| BS2V 2 MXV 32-506 O-ITT | 1.5 X2 |
| BS2V 2 MXV 32-507 O-ITT | 1.5 X2 |
| BS2V 2 MXV 32-508 O-ITT | 2.2 X2 |
| BS2V 2 MXV 32-510 O-ITT | 2.2 X2 |
| BS2V 2 MXV 32-512 O-ITT | 3 X2 |
| BS2V 2 MXV 40-904 O-ITT | 1.5 X2 |
| BS2V 2 MXV 40-905 O-ITT | 2.2 X2 |
| BS2V 2 MXV 40-906 O-ITT | 2.2 X2 |
| BS2V 2 MXV 40-907 O-ITT | 3 X2 |
| BS2V 2 MXV 40-908 O-ITT | 3 X2 |
| BS2V 2 MXV 40-910 O-ITT | 4 X2 |
| BS2V 2 MXV 40-911 O-ITT | 4 X2 |
| BS2V 2 MXV 50-1503/A-ITT | 2.2 X2 |
| BS2V 2 MXV 50-1504-ITT | 3 X2 |
| BS2V 2 MXV 50-1505-ITT | 4 X2 |
| BS2V 2 MXV 50-1506-ITT | 5.5 X2 |
| BS2V 2 MXV 50-1507-ITT | 5.5 X2 |
| BS2V 2 MXV 50-1508/A-ITT | 5.5 X2 |
| BS2V 2 MXV 50-1509-ITT | 7.5 X2 |
| BS2V 2 MXV 50-1510-ITT | 7.5 X2 |
| BS2V 2 MXV 50-2003-ITT | 3 X2 |
| BS2V 2 MXV 50-2004-ITT | 4 X2 |
| BS2V 2 MXV 50-2005-ITT | 5.5 X2 |
| BS2V 2 MXV 50-2006-ITT | 7.5 X2 |
| BS2V 2 MXV 50-2007-ITT | 7.5 X2 |
| BS2V 2 MXV 50-2008-ITT | 9.2 X2 |
| BS2V 2 MXV 50-2009-ITT | 9.2 X2 |
| BS2V 2 MXV 65-3202/D-ITT | 4 X2 |
| BS2V 2 MXV 65-3203/C-ITT | 5.5 X2 |
| BS2V 2 MXV 65-3204/C-ITT | 7.5 X2 |
| BS2V 2 MXV 65-3205/D-ITT | 11 X2 |
| BS2V 2 MXV 65-3206/D-ITT | 11 X2 |
| BS2V 2 MXV 65-3207/D-ITT | 15 X2 |
| BS2V 2 MXV 80-4802/C-ITT | 5.5 X2 |
| BS2V 2 MXV 80-4803/C-ITT | 7.5 X2 |
| BS2V 2 MXV 80-4804/D-ITT | 11 X2 |
| BS2V 2 MXV 80-4805/D-ITT | 15 X2 |
| BS2V 2 MXV 80-4806/D-ITT | 15 X2 |
| BS2V 2 MXV 80-4807/E-ITT | 18.5 X2 |
| BS2V 2 MXV 100-6501/A-ITT | 5.5 X2 |
| BS2V 2 MXV 100-6502-2R/A-ITT | 7.5 X2 |
| BS2V 2 MXV 100-6502/A-ITT | 11 X2 |
| BS2V 2 MXV 100-6503-2R/A-ITT | 15 X2 |
| BS2V 2 MXV 100-6503/B-ITT | 18.5 X2 |
| BS2V 2 MXV 100-6504-2R/B-ITT | 18.5 X2 |
| BS2V 2 MXV 100-6504/A-ITT | 22 X2 |
| BS2V 2 MXV 100-9001/A-ITT | 7.5 X2 |
| BS2V 2 MXV 100-9002-2R/A-ITT | 11 X2 |
| BS2V 2 MXV 100-9002/A-ITT | 15 X2 |
| BS2V 2 MXV 100-9003-2R/B-ITT | 18.5 X2 |
| BS2V 2 MXV 100-9003/A-ITT | 22 X2 |

**BSM3V ..-ITT**

| Model | P2 |
|---|---|
| | kW |
| BS3V 3 MXV 25-304 O-ITT | 0.75 X3 |
| BS3V 3 MXV 25-305 O-ITT | 0.75 X3 |
| BS3V 3 MXV 25-306 O-ITT | 1.1 X3 |
| BS3V 3 MXV 25-307 O-ITT | 1.1 X3 |
| BS3V 3 MXV 25-308 O-ITT | 1.5 X3 |
| BS3V 3 MXV 25-310 O-ITT | 1.5 X3 |
| BS3V 3 MXV 25-312 O-ITT | 2.2 X3 |
| BS3V 3 MXV 32-504 O-ITT | 1.1 X3 |
| BS3V 3 MXV 32-505 O-ITT | 1.1 X3 |
| BS3V 3 MXV 32-506 O-ITT | 1.5 X3 |
| BS3V 3 MXV 32-507 O-ITT | 1.5 X3 |
| BS3V 3 MXV 32-508 O-ITT | 2.2 X3 |
| BS3V 3 MXV 32-510 O-ITT | 2.2 X3 |
| BS3V 3 MXV 32-512 O-ITT | 3 X3 |
| BS3V 3 MXV 40-904 O-ITT | 1.5 X3 |
| BS3V 3 MXV 40-905 O-ITT | 2.2 X3 |
| BS3V 3 MXV 40-906 O-ITT | 2.2 X3 |
| BS3V 3 MXV 40-907 O-ITT | 3 X3 |
| BS3V 3 MXV 40-908 O-ITT | 3 X3 |
| BS3V 3 MXV 40-910 O-ITT | 4 X3 |
| BS3V 3 MXV 40-911 O-ITT | 4 X3 |
| BS3V 3 MXV 50-1503/A-ITT | 2.2 X3 |
| BS3V 3 MXV 50-1504-ITT | 3 X3 |
| BS3V 3 MXV 50-1505-ITT | 4 X3 |
| BS3V 3 MXV 50-1506-ITT | 5.5 X3 |
| BS3V 3 MXV 50-1507-ITT | 5.5 X3 |
| BS3V 3 MXV 50-1508/A-ITT | 5.5 X3 |
| BS3V 3 MXV 50-1509-ITT | 7.5 X3 |
| BS3V 3 MXV 50-1510-ITT | 7.5 X3 |
| BS3V 3 MXV 50-2003-ITT | 3 X3 |
| BS3V 3 MXV 50-2004-ITT | 4 X3 |
| BS3V 3 MXV 50-2005-ITT | 5.5 X3 |
| BS3V 3 MXV 50-2006-ITT | 7.5 X3 |
| BS3V 3 MXV 50-2007-ITT | 7.5 X3 |
| BS3V 3 MXV 50-2008-ITT | 9.2 X3 |
| BS3V 3 MXV 50-2009-ITT | 9.2 X3 |
| BS3V 3 MXV 65-3202/D-ITT | 4 X3 |
| BS3V 3 MXV 65-3203/C-ITT | 5.5 X3 |
| BS3V 3 MXV 65-3204/C-ITT | 7.5 X3 |
| BS3V 3 MXV 65-3205/D-ITT | 11 X3 |
| BS3V 3 MXV 65-3206/D-ITT | 11 X3 |
| BS3V 3 MXV 65-3207/D-ITT | 15 X3 |
| BS3V 3 MXV 80-4802/C-ITT | 5.5 X3 |
| BS3V 3 MXV 80-4803/C-ITT | 7.5 X3 |
| BS3V 3 MXV 80-4804/D-ITT | 11 X3 |
| BS3V 3 MXV 80-4805/D-ITT | 15 X3 |
| BS3V 3 MXV 80-4806/D-ITT | 15 X3 |
| BS3V 3 MXV 80-4807/E-ITT | 18.5 X3 |
| BS3V 3 MXV 100-6501/A-ITT | 5.5 X3 |
| BS3V 3 MXV 100-6502-2R/A-ITT | 7.5 X3 |
| BS3V 3 MXV 100-6502/A-ITT | 11 X3 |
| BS3V 3 MXV 100-6503-2R/A-ITT | 15 X3 |
| BS3V 3 MXV 100-6503/B-ITT | 18.5 X3 |
| BS3V 3 MXV 100-6504-2R/B-ITT | 18.5 X3 |
| BS3V 3 MXV 100-6504/A-ITT | 22 X3 |
| BS3V 3 MXV 100-9001/A-ITT | 7.5 X3 |
| BS3V 3 MXV 100-9002-2R/A-ITT | 11 X3 |
| BS3V 3 MXV 100-9002/A-ITT | 15 X3 |
| BS3V 3 MXV 100-9003-2R/B-ITT | 18.5 X3 |
| BS3V 3 MXV 100-9003/A-ITT | 22 X3 |

# BS. MXV

**Variable speed pump units with WALL**

**BS2V ..-WALL**

| Model | P2 |
|---|---|
| | kW |
| BS2V 2 MXV 50-1504-WALL | 3 X2 |
| BS2V 2 MXV 50-1505-WALL | 4 X2 |
| BS2V 2 MXV 50-1506-WALL | 5.5 X2 |
| BS2V 2 MXV 50-1507-WALL | 5.5 X2 |
| BS2V 2 MXV 50-1508/A-WALL | 5.5 X2 |
| BS2V 2 MXV 50-1509-WALL | 7.5 X2 |
| BS2V 2 MXV 50-1510-WALL | 7.5 X2 |
| BS2V 2 MXV 50-1512-WALL | 9.2 X2 |
| BS2V 2 MXV 50-1515-WALL | 11 X2 |
| BS2V 2 MXV 50-1517-WALL | 15 X2 |
| BS2V 2 MXV 50-2003-WALL | 3 X2 |
| BS2V 2 MXV 50-2004-WALL | 4 X2 |
| BS2V 2 MXV 50-2005-WALL | 5.5 X2 |
| BS2V 2 MXV 50-2006-WALL | 7.5 X2 |
| BS2V 2 MXV 50-2007-WALL | 7.5 X2 |
| BS2V 2 MXV 50-2008-WALL | 9.2 X2 |
| BS2V 2 MXV 50-2009-WALL | 9.2 X2 |
| BS2V 2 MXV 50-2011-WALL | 11 X2 |
| BS2V 2 MXV 50-2015-WALL | 15 X2 |

# BS. MXV

## Dimensions and weights

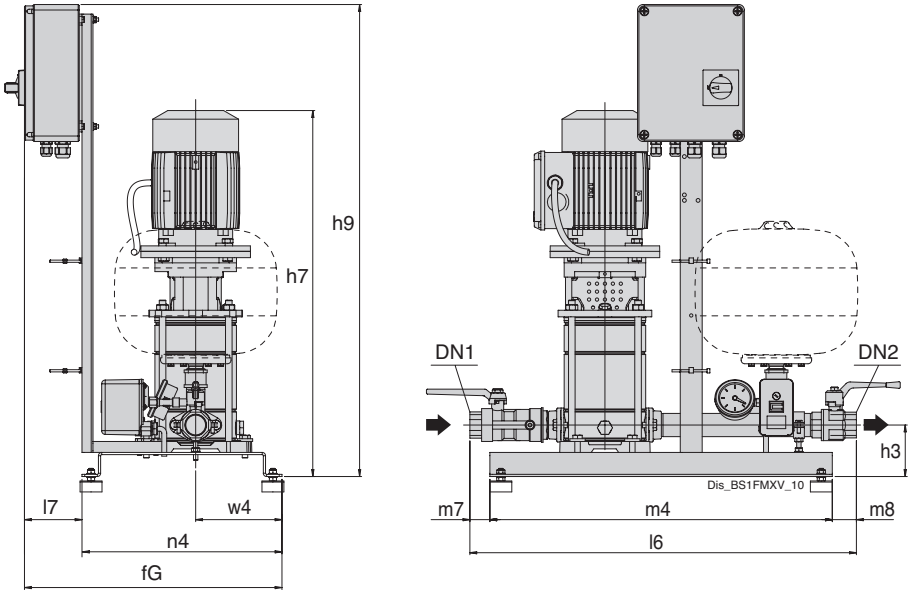


| TYPE | | | mm | | | | | | | | | kg |
|---|---|---|---|---|---|---|---|---|---|---|---|---|
| | DN1 | DN2 | fG | h3 | h7 | h9 | l6 | l7 | m4 | n4 | w4 | Weight |
| BS1F1MXV25-304O | G 1 | G 1 | 470 | 94 | 666 | 862 | 651 | 105 | 625 | 365 | 158 | 44.5 |
| BS1F1MXV25-305O | G 1 | G 1 | 470 | 94 | 690 | 862 | 651 | 105 | 625 | 365 | 158 | 53.8 |
| BS1F1MXV25-306O | G 1 | G 1 | 470 | 94 | 714 | 862 | 651 | 105 | 625 | 365 | 158 | 48.3 |
| BS1F1MXV25-307O | G 1 | G 1 | 470 | 94 | 738 | 862 | 651 | 105 | 625 | 365 | 158 | 53.8 |
| BS1F1MXV25-308O | G 1 | G 1 | 470 | 94 | 762 | 862 | 651 | 105 | 625 | 365 | 158 | 55.8 |
| BS1F1MXV25-310O | G 1 | G 1 | 470 | 94 | 811 | 862 | 651 | 105 | 625 | 365 | 158 | 53.8 |
| BS1F1MXV25-312O | G 1 | G 1 | 470 | 94 | 899 | 862 | 651 | 105 | 625 | 365 | 158 | 53.8 |
| BS1F1MXV32-504O | G 1 1/4 | G 1 1/4 | 470 | 94 | 666 | 862 | 706 | 105 | 625 | 365 | 158 | 53.8 |
| BS1F1MXV32-505O | G 1 1/4 | G 1 1/4 | 470 | 94 | 690 | 862 | 706 | 105 | 625 | 365 | 158 | 53.8 |
| BS1F1MXV32-506O | G 1 1/4 | G 1 1/4 | 470 | 94 | 714 | 862 | 706 | 105 | 625 | 365 | 158 | 51.1 |
| BS1F1MXV32-507O | G 1 1/4 | G 1 1/4 | 470 | 94 | 738 | 862 | 706 | 105 | 625 | 365 | 158 | - |
| BS1F1MXV32-508O | G 1 1/4 | G 1 1/4 | 470 | 94 | 802 | 862 | 706 | 105 | 625 | 365 | 158 | 55.4 |
| BS1F1MXV32-510O | G 1 1/4 | G 1 1/4 | 470 | 94 | 851 | 862 | 706 | 105 | 625 | 365 | 158 | 56.6 |
| BS1F1MXV32-512O | G 1 1/4 | G 1 1/4 | 470 | 94 | 915 | 862 | 706 | 105 | 625 | 365 | 158 | 53.8 |
| BS1F1MXV40-904O | G 1 1/2 | G 1 1/2 | 470 | 124 | 711 | 862 | 706 | 105 | 625 | 365 | 160 | 53.8 |
| BS1F1MXV40-905O | G 1 1/2 | G 1 1/2 | 470 | 124 | 781 | 862 | 706 | 105 | 625 | 365 | 160 | 53.8 |
| BS1F1MXV40-906O | G 1 1/2 | G 1 1/2 | 470 | 124 | 811 | 862 | 706 | 105 | 625 | 365 | 160 | 60 |
| BS1F1MXV40-907O | G 1 1/2 | G 1 1/2 | 470 | 124 | 857 | 862 | 706 | 105 | 625 | 365 | 160 | 53.8 |
| BS1F1MXV40-908O | G 1 1/2 | G 1 1/2 | 470 | 124 | 887 | 862 | 706 | 105 | 625 | 365 | 160 | 53.8 |
| BS1F1MXV40-910O | G 1 1/2 | G 1 1/2 | 470 | 124 | 947 | 862 | 706 | 105 | 625 | 365 | 160 | 53.8 |
| BS1F1MXV40-911O | G 1 1/2 | G 1 1/2 | 470 | 124 | 977 | 862 | 706 | 105 | 625 | 365 | 160 | 53.8 |

Non-binding dimensions to be checked when ordering
Anti-vibration kit supplied disassembled as standard

| TYPE | ISO 228 | | mm | | | | | | | | | Kg |
|---|---|---|---|---|---|---|---|---|---|---|---|---|
| | DN1 | DN2 | fG | h3 | h7 | h9 | l6 | l7 | m4 | n4 | w4 | Weight |
| BSM1F1MXVM25-304O | G 1 | G 1 | 470 | 94 | 666 | 862 | 790 | 105 | 625 | 365 | 158 | 42.3 |
| BSM1F1MXVM25-305O | G 1 | G 1 | 470 | 94 | 690 | 862 | 790 | 105 | 625 | 365 | 158 | 42.3 |
| BSM1F1MXVM25-306O | G 1 | G 1 | 470 | 94 | 714 | 862 | 790 | 105 | 625 | 365 | 158 | 42.3 |
| BSM1F1MXVM25-307O | G 1 | G 1 | 470 | 94 | 738 | 862 | 790 | 105 | 625 | 365 | 158 | 42.3 |
| BSM1F1MXVM25-308O | G 1 | G 1 | 470 | 94 | 762 | 862 | 790 | 105 | 625 | 365 | 158 | 42.3 |
| BSM1F1MXVM32-504O | G 1 1/4 | G 1 1/4 | 470 | 94 | 666 | 862 | 790 | 105 | 625 | 365 | 158 | 42.3 |
| BSM1F1MXVM32-505O | G 1 1/4 | G 1 1/4 | 470 | 94 | 690 | 862 | 790 | 105 | 625 | 365 | 158 | 42.3 |
| BSM1F1MXVM32-506O | G 1 1/4 | G 1 1/4 | 470 | 94 | 714 | 862 | 790 | 105 | 625 | 365 | 158 | 42.3 |
| BSM1F1MXVM32-507O | G 1 1/4 | G 1 1/4 | 470 | 94 | 738 | 862 | 790 | 105 | 625 | 365 | 158 | 42.3 |
| BSM1F1MXVM40-904O | G 1 1/2 | G 1 1/2 | 470 | 94 | 802 | 862 | 790 | 105 | 625 | 365 | 158 | 42.3 |

Non-binding dimensions to be checked when ordering
Anti-vibration kit supplied disassembled as standard

# BS. MXV

## Dimensions and weights

Fig. **2**

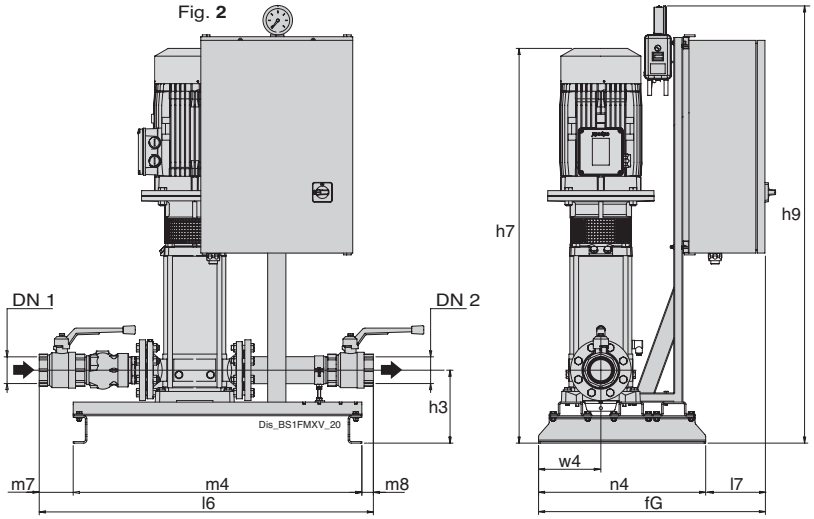


| TYPE | Manifolds | | mm | | | | | | | | | Kg |
|---|---|---|---|---|---|---|---|---|---|---|---|---|
| | DN1 | DN2 | fG | h3 | h7 | h9 | l6 | l7 | m4 | n4 | w4 | Weight |
| **BS1F 1 MXV 50-1503/A** | G 2 | G 2 | 550 | 225 | 934 | 1155 | 919 | - | 950 | 550 | 205 | 55.4 |
| **BS1F 1 MXV 50-1504** | G 2 | G 2 | 550 | 225 | 980 | 1155 | 919 | - | 950 | 550 | 205 | 107 |
| **BS1F 1 MXV 50-1505** | G 2 | G 2 | 550 | 225 | 1028 | 1155 | 919 | - | 950 | 550 | 205 | 103 |
| **BS1F 1 MXV 50-1506** | G 2 | G 2 | 550 | 225 | 1167 | 1155 | 919 | - | 950 | 550 | 205 | 55.4 |
| **BS1F 1 MXV 50-1507** | G 2 | G 2 | 550 | 225 | 1215 | 1155 | 919 | - | 950 | 550 | 205 | - |
| **BS1F 1 MXV 50-1508/A** | G 2 | G 2 | 695 | 225 | 1263 | 1420 | 919 | 145 | 950 | 550 | 205 | 55.4 |
| **BS1F 1 MXV 50-1509** | G 2 | G 2 | 695 | 225 | 1311 | 1420 | 919 | 145 | 950 | 550 | 205 | 55.4 |
| **BS1F 1 MXV 50-1510** | G 2 | G 2 | 695 | 225 | 1359 | 1420 | 919 | 145 | 950 | 550 | 205 | 55.4 |
| **BS1F 1 MXV 50-2003** | G 2 | G 2 | 550 | 225 | 932 | 1155 | 919 | - | 950 | 550 | 205 | 55.4 |
| **BS1F 1 MXV 50-2004** | G 2 | G 2 | 550 | 225 | 967 | 1155 | 919 | - | 950 | 550 | 205 | 110 |
| **BS1F 1 MXV 50-2005** | G 2 | G 2 | 550 | 225 | 1119 | 1155 | 919 | - | 950 | 550 | 205 | 55.4 |
| **BS1F 1 MXV 50-2006** | G 2 | G 2 | 695 | 225 | 1167 | 1420 | 919 | 145 | 950 | 550 | 205 | 165 |
| **BS1F 1 MXV 50-2007** | G 2 | G 2 | 65 | 225 | 1215 | 1420 | 919 | 145 | 950 | 550 | 205 | 55.4 |
| **BS1F 1 MXV 50-2008** | G 2 | G 2 | 695 | 225 | 1367 | 1420 | 919 | 145 | 950 | 550 | 205 | 55.4 |
| **BS1F 1 MXV 50-2009** | G 2 | G 2 | 695 | 225 | 1415 | 1420 | 919 | 145 | 950 | 550 | 205 | 55.4 |
| **BS1F 1 MXV 65-3202/D** | G 2 1/2 | G 2 1/2 | 550 | 240 | 853 | 1155 | 1042 | - | 950 | 550 | 205 | 119 |
| **BS1F 1 MXV 65-3203/C** | G 2 1/2 | G 2 1/2 | 550 | 240 | 947 | 1155 | 1042 | - | 950 | 550 | 205 | 53.8 |
| **BS1F 1 MXV 65-3204/C** | G 2 1/2 | G 2 1/2 | 695 | 240 | 993 | 1420 | 1042 | 145 | 950 | 550 | 205 | 178 |
| **BS1F 1 MXV 65-3205/D** | G 2 1/2 | G 2 1/2 | 695 | 240 | 1189 | 1420 | 1042 | 145 | 950 | 550 | 205 | 228.5 |
| **BS1F 1 MXV 65-3206/D** | G 2 1/2 | G 2 1/2 | 695 | 240 | 1235 | 1420 | 1042 | 145 | 950 | 550 | 205 | 221 |
| **BS1F 1 MXV 65-3207/D** | G 2 1/2 | G 2 1/2 | 695 | 240 | 1306 | 1420 | 1042 | 145 | 950 | 550 | 205 | 245.5 |
| **BS1F 1 MXV 80-4802/C** | G 3 | G 3 | 550 | 240 | 940 | 1155 | 1100 | - | 950 | 550 | 205 | 53.8 |
| **BS1F 1 MXV 80-4803/C** | G 3 | G 3 | 695 | 240 | 1001 | 1420 | 1100 | 145 | 950 | 550 | 205 | 53.8 |
| **BS1F 1 MXV 80-4804/D** | G 3 | G 3 | 695 | 240 | 1212 | 1420 | 1100 | 145 | 950 | 550 | 205 | 53.8 |
| **BS1F 1 MXV 80-4805/D** | G 3 | G 3 | 695 | 240 | 1299 | 1420 | 1100 | 145 | 950 | 550 | 205 | 53.8 |
| **BS1F 1 MXV 80-4806/D** | G 3 | G 3 | 695 | 240 | 1360 | 1420 | 1100 | 145 | 950 | 550 | 205 | 53.8 |
| **BS1F 1 MXV 80-4807/E** | G 3 | G 3 | 695 | 240 | 1498 | 1420 | 1100 | 145 | 950 | 550 | 205 | 53.8 |

Non-binding dimensions to be checked when ordering

# BS. MXV

## Dimensions and weights

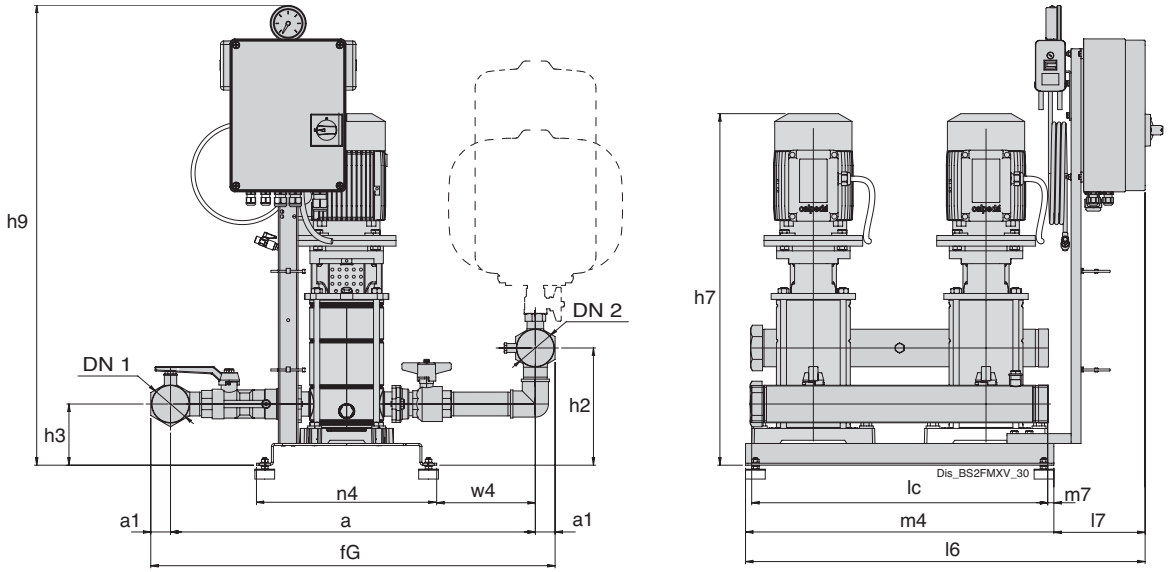


| TYPE | Manifolds | | mm | | | | | | | | | | | | | Kg |
|---|---|---|---|---|---|---|---|---|---|---|---|---|---|---|---|---|
| | DN1 | DN2 | a | a1 | fG | h2 | h3 | h7 | h9 | l6 | l7 | lc | m4 | n4 | w4 | Weight |
| **BS2F 2 MXV 25-304 O** | G 1 1/2 | G 1 1/2 | 589 | 26.5 | 642 | 170 | 94 | 666 | 864 | 810 | 185 | 600 | 625 | 365 | 140 | - |
| **BS2F 2 MXV 25-305 O** | G 1 1/2 | G 1 1/2 | 589 | 26.5 | 642 | 170 | 94 | 690 | 864 | 810 | 185 | 600 | 625 | 365 | 140 | - |
| **BS2F 2 MXV 25-306 O** | G 1 1/2 | G 1 1/2 | 589 | 26.5 | 642 | 170 | 94 | 714 | 864 | 810 | 185 | 600 | 625 | 365 | 140 | 87.7 |
| **BS2F 2 MXV 25-307 O** | G 1 1/2 | G 1 1/2 | 589 | 26.5 | 642 | 170 | 94 | 738 | 864 | 810 | 185 | 600 | 625 | 365 | 140 | - |
| **BS2F 2 MXV 25-308 O** | G 1 1/2 | G 1 1/2 | 589 | 26.5 | 642 | 170 | 94 | 762 | 864 | 810 | 185 | 600 | 625 | 365 | 140 | - |
| **BS2F 2 MXV 25-310 O** | G 1 1/2 | G 1 1/2 | 589 | 26.5 | 642 | 170 | 94 | 811 | 864 | 810 | 185 | 600 | 625 | 365 | 140 | - |
| **BS2F 2 MXV 25-312 O** | G 1 1/2 | G 1 1/2 | 589 | 26.5 | 642 | 170 | 94 | 899 | 864 | 810 | 185 | 600 | 625 | 365 | 140 | - |
| **BS2F 2 MXV 32-504 O** | G 2 | G 2 | 642 | 32 | 706 | 186 | 94 | 666 | 864 | 810 | 185 | 600 | 625 | 365 | 168 | 86.9 |
| **BS2F 2 MXV 32-505 O** | G 2 | G 2 | 642 | 32 | 706 | 186 | 94 | 690 | 864 | 810 | 185 | 600 | 625 | 365 | 168 | - |
| **BS2F 2 MXV 32-506 O** | G 2 | G 2 | 642 | 32 | 706 | 186 | 94 | 714 | 864 | 810 | 185 | 600 | 625 | 365 | 168 | 93.3 |
| **BS2F 2 MXV 32-507 O** | G 2 | G 2 | 642 | 32 | 706 | 186 | 94 | 738 | 864 | 810 | 185 | 600 | 625 | 365 | 168 | 94.5 |
| **BS2F 2 MXV 32-508 O** | G 2 | G 2 | 642 | 32 | 706 | 186 | 94 | 802 | 864 | 810 | 185 | 600 | 625 | 365 | 168 | - |
| **BS2F 2 MXV 32-510 O** | G 2 | G 2 | 642 | 32 | 706 | 186 | 94 | 851 | 864 | 810 | 185 | 600 | 625 | 365 | 168 | 103 |
| **BS2F 2 MXV 32-512 O** | G 2 | G 2 | 642 | 32 | 706 | 186 | 94 | 915 | 864 | 810 | 185 | 600 | 625 | 365 | 168 | - |
| **BS2F 2 MXV 40-904 O** | G 2 1/2 | G 2 1/2 | 706 | 40 | 820 | 238 | 124 | 711 | 931 | 810 | 185 | 600 | 625 | 365 | 200 | - |
| **BS2F 2 MXV 40-905 O** | G 2 1/2 | G 2 1/2 | 706 | 40 | 820 | 238 | 124 | 781 | 931 | 810 | 185 | 600 | 625 | 365 | 200 | - |
| **BS2F 2 MXV 40-906 O** | G 2 1/2 | G 2 1/2 | 706 | 40 | 820 | 238 | 124 | 811 | 931 | 810 | 185 | 600 | 625 | 365 | 200 | 110.9 |
| **BS2F 2 MXV 40-907 O** | G 2 1/2 | G 2 1/2 | 706 | 40 | 820 | 238 | 124 | 857 | 931 | 810 | 185 | 600 | 625 | 365 | 200 | 128 |
| **BS2F 2 MXV 40-908 O** | G 2 1/2 | G 2 1/2 | 706 | 40 | 820 | 238 | 124 | 887 | 931 | 810 | 185 | 600 | 625 | 365 | 200 | - |
| **BS2F 2 MXV 40-910 O** | G 2 1/2 | G 2 1/2 | 706 | 40 | 820 | 238 | 124 | 947 | 931 | 810 | 185 | 600 | 625 | 365 | 200 | 139.5 |
| **BS2F 2 MXV 40-911 O** | G 2 1/2 | G 2 1/2 | 706 | 40 | 820 | 170 | 94 | 977 | 1012 | 810 | 185 | 600 | 625 | 365 | 200 | - |

Non-binding dimensions to be checked when ordering
Anti-vibration kit supplied disassembled as standard

# BS. MXV

## Dimensions and weights

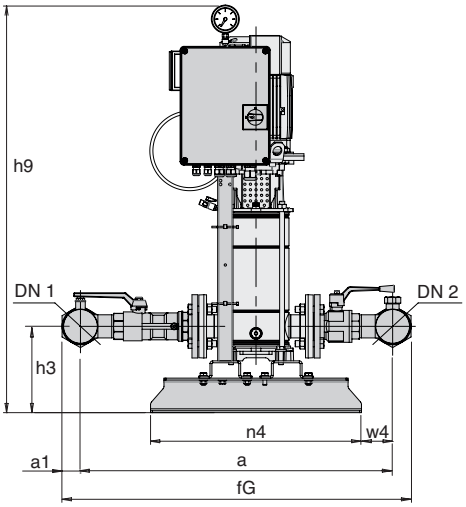


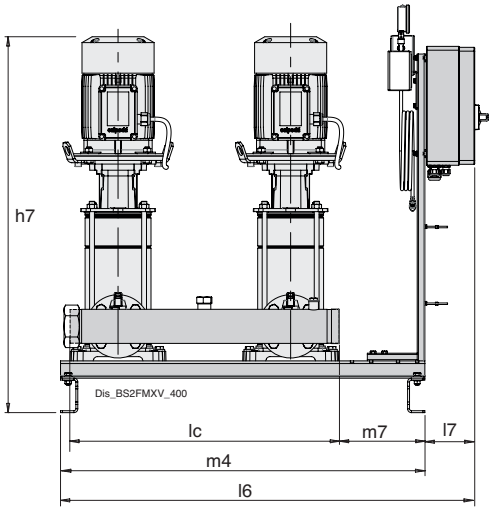


| TYPE | Manifolds | | mm | | | | | | | | | | | | Kg |
|---|---|---|---|---|---|---|---|---|---|---|---|---|---|---|---|
| | DN1 | DN2 | a | a1 | fG | h3 | h7 | h9 | l6 | l7 | lc | m4 | n4 | w4 | Weight |
| BS2F 2 MXV 50-1503/A | G 3 | G 3 | 816 | 48 | 913 | 225 | 934 | 1015 | 1080 | 130 | 700 | 950 | 550 | 82 | 52.4 |
| BS2F 2 MXV 50-1504 | G 3 | G 3 | 816 | 48 | 913 | 225 | 980 | 1015 | 1080 | 130 | 700 | 950 | 550 | 82 | 174.5 |
| BS2F 2 MXV 50-1505 | G 3 | G 3 | 816 | 48 | 913 | 225 | 1028 | 1015 | 1080 | 130 | 700 | 950 | 550 | 82 | 52.4 |
| BS2F 2 MXV 50-1506 | G 3 | G 3 | 816 | 48 | 913 | 225 | 1167 | 1015 | 1080 | 130 | 700 | 950 | 550 | 82 | 236 |
| BS2F 2 MXV 50-1507 | G 3 | G 3 | 816 | 48 | 913 | 225 | 1215 | 1015 | 1080 | 130 | 700 | 950 | 550 | 82 | 241 |
| BS2F 2 MXV 50-1508/A | G 3 | G 3 | 816 | 48 | 913 | 225 | 1263 | 1420 | 1170 | 220 | 700 | 950 | 550 | 82 | 52.4 |
| BS2F 2 MXV 50-1509 | G 3 | G 3 | 816 | 48 | 913 | 225 | 1311 | 1420 | 1170 | 220 | 700 | 950 | 550 | 82 | - |
| BS2F 2 MXV 50-1510 | G 3 | G 3 | 816 | 48 | 913 | 225 | 1359 | 1420 | 1170 | 220 | 700 | 950 | 550 | 82 | 290 |
| BS2F 2 MXV 50-2003 | G 3 | G 3 | 816 | 48 | 913 | 225 | 932 | 1015 | 1112 | 130 | 700 | 950 | 550 | 82 | 52.4 |
| BS2F 2 MXV 50-2004 | G 3 | G 3 | 816 | 48 | 913 | 225 | 967 | 1015 | 1112 | 130 | 700 | 950 | 550 | 82 | 181.5 |
| BS2F 2 MXV 50-2005 | G 3 | G 3 | 816 | 48 | 913 | 225 | 1119 | 1015 | 1112 | 130 | 700 | 950 | 550 | 82 | 227 |
| BS2F 2 MXV 50-2006 | G 3 | G 3 | 816 | 48 | 913 | 225 | 1167 | 1420 | 1202 | 220 | 700 | 950 | 550 | 82 | 278 |
| BS2F 2 MXV 50-2007 | G 3 | G 3 | 816 | 48 | 913 | 225 | 1215 | 1420 | 1202 | 220 | 700 | 950 | 550 | 82 | 52.4 |
| BS2F 2 MXV 50-2008 | G 3 | G 3 | 816 | 48 | 913 | 225 | 1367 | 1420 | 1202 | 220 | 700 | 950 | 550 | 82 | 52.4 |
| BS2F 2 MXV 50-2009 | G 3 | G 3 | 816 | 48 | 913 | 225 | 1415 | 1420 | 1202 | 220 | 700 | 950 | 550 | 82 | 52.4 |

Non-binding dimensions to be checked when ordering

# BS. MXV

## Dimensions and weights

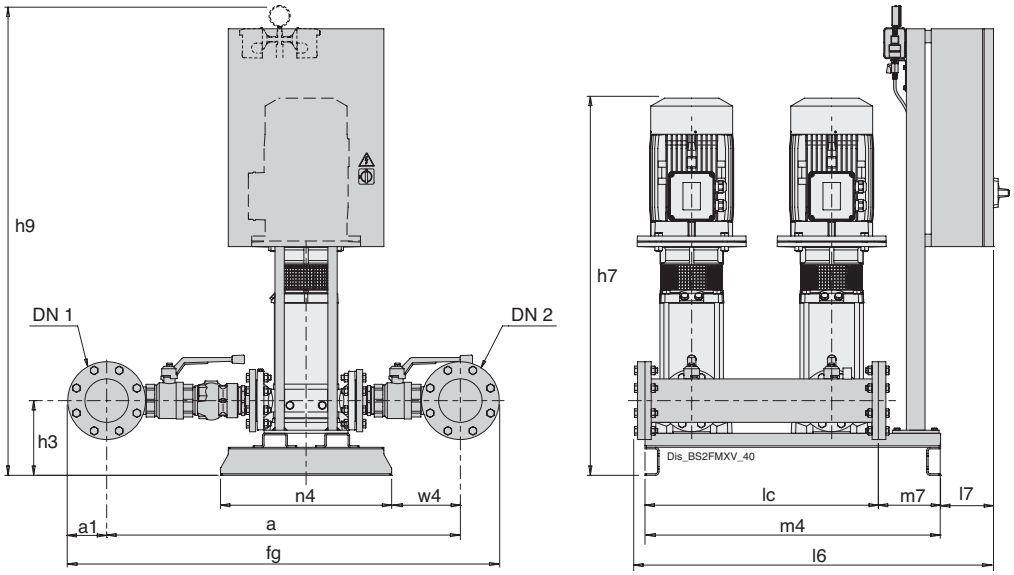


| TYPE | Manifolds | | mm | | | | | | | | | | | | Kg |
|---|---|---|---|---|---|---|---|---|---|---|---|---|---|---|---|
| | DN1 | DN2 | a | a1 | fG | h3 | h7 | h9 | l6 | l7 | lc | m4 | n4 | w4 | Weight |
| BS2F 2 MXV 65-3202/D | 100 | 100 | 1090 | 110 | 1310 | 240 | 853 | 1015 | 1114 | 130 | 750 | 950 | 550 | 231 | 271 |
| BS2F 2 MXV 65-3203/C | 100 | 100 | 1090 | 110 | 1310 | 240 | 947 | 1015 | 1114 | 130 | 750 | 950 | 550 | 231 | 304 |
| BS2F 2 MXV 65-3204/C | 100 | 100 | 1090 | 110 | 1310 | 240 | 993 | 1420 | 1204 | 220 | 750 | 950 | 550 | 231 | 354 |
| BS2F 2 MXV 65-3205/D | 100 | 100 | 1090 | 110 | 1310 | 240 | 1189 | 1420 | 1204 | 220 | 750 | 950 | 550 | 231 | - |
| BS2F 2 MXV 65-3206/D | 100 | 100 | 1090 | 110 | 1310 | 240 | 1235 | 1420 | 1204 | 220 | 750 | 950 | 550 | 231 | 436.5 |
| BS2F 2 MXV 65-3207/D | 100 | 100 | 1090 | 110 | 1310 | 240 | 1306 | 1420 | 1204 | 220 | 750 | 950 | 550 | 231 | 107.5 |
| BS2F 2 MXV 80-4802/C | 125 | 125 | 1191 | 125 | 1441 | 240 | 940 | 1015 | 1080 | 130 | 750 | 950 | 550 | 279 | - |
| BS2F 2 MXV 80-4803/C | 125 | 125 | 1191 | 125 | 1441 | 240 | 1001 | 1420 | 1170 | 220 | 750 | 950 | 550 | 279 | - |
| BS2F 2 MXV 80-4804/D | 125 | 125 | 1191 | 125 | 1441 | 240 | 1212 | 1420 | 1170 | 220 | 750 | 950 | 550 | 279 | 471 |
| BS2F 2 MXV 80-4805/D | 125 | 125 | 1191 | 125 | 1441 | 240 | 1299 | 1420 | 1170 | 220 | 750 | 950 | 550 | 279 | - |
| BS2F 2 MXV 80-4806/D | 125 | 125 | 1191 | 125 | 1441 | 240 | 1360 | 1420 | 1170 | 220 | 750 | 950 | 550 | 279 | 534 |
| BS2F 2 MXV 80-4807/E | 125 | 125 | 1191 | 125 | 1441 | 240 | 1498 | 1420 | 1170 | 220 | 750 | 950 | 550 | 279 | 534 |
| BS2F 2 MXV 100-6502-2R/A | 150 | 150 | - | 142.5 | - | - | 1394 | - | - | - | 950 | - | - | - | 107.5 |
| BS2F 2 MXV 100-6502/A | 150 | 150 | - | 142.5 | - | - | 1534 | - | - | - | 950 | - | - | - | 107.5 |
| BS2F 2 MXV 100-6503-2R/A | 150 | 150 | - | 142.5 | - | - | 1651 | - | - | - | 950 | - | - | - | 107.5 |
| BS2F 2 MXV 100-6503/B | 150 | 150 | - | 142.5 | - | - | 1705 | - | - | - | 950 | - | - | - | 107.5 |
| BS2F 2 MXV 100-6504-2R/B | 150 | 150 | - | 142.5 | - | - | 1797 | - | - | - | 950 | - | - | - | 107.5 |
| BS2F 2 MXV 100-6504/A | 150 | 150 | - | 142.5 | - | - | 1797 | - | - | - | 950 | - | - | - | 107.5 |
| BS2F 2 MXV 100-6505-2R/A | 150 | 150 | - | 142.5 | - | - | 1968 | - | - | - | 950 | - | - | - | 107.5 |
| BS2F 2 MXV 100-6505/A | 150 | 150 | - | 142.5 | - | - | 1968 | - | - | - | 950 | - | - | - | 107.5 |
| BS2F 2 MXV 100-9002-2R/A | 200 | 200 | 1543 | 170 | 1883 | 370 | 1538 | - | - | - | 950 | 1300 | 1050 | 260 | 107.5 |
| BS2F 2 MXV 100-9002/A | 200 | 200 | 1543 | 170 | 1883 | 370 | 1563 | - | - | - | 950 | 1300 | 1050 | 260 | 107.5 |
| BS2F 2 MXV 100-9003-2R/B | 200 | 200 | 1543 | 170 | 1883 | 370 | 1709 | - | - | - | 950 | 1300 | 1050 | 260 | 107.5 |
| BS2F 2 MXV 100-9003/A | 200 | 200 | 1543 | 170 | 1883 | 370 | 1709 | - | - | - | 950 | 1300 | 1050 | 260 | 107.5 |
| BS2F 2 MXV 100-9004-2R/A | 200 | 200 | 1543 | 170 | 1883 | 370 | 1904 | - | - | - | 950 | 1300 | 1050 | 260 | 107.5 |
| BS2F 2 MXV 100-9004/A | 200 | 200 | 1543 | 170 | 1883 | 370 | 1904 | - | - | - | 950 | 1300 | 1050 | 260 | 107.5 |
| BS2F 2 MXV 100-9005-2R/A | 200 | 200 | 1543 | 170 | 1883 | 370 | 1997 | - | - | - | 950 | 1300 | 1050 | 260 | 107.5 |

Non-binding dimensions to be checked when ordering
Missing dimensions on request

# BS. MXV

## Dimensions and weights

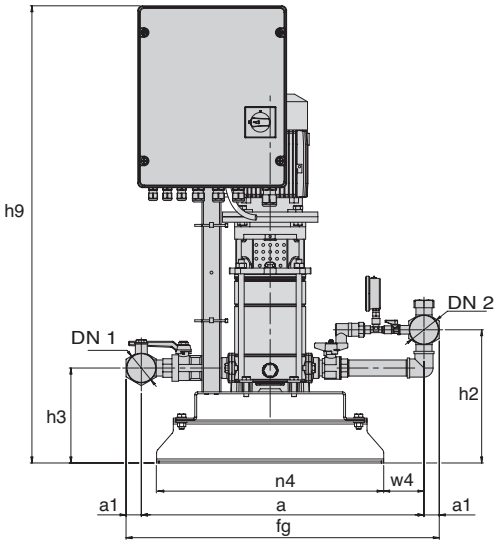


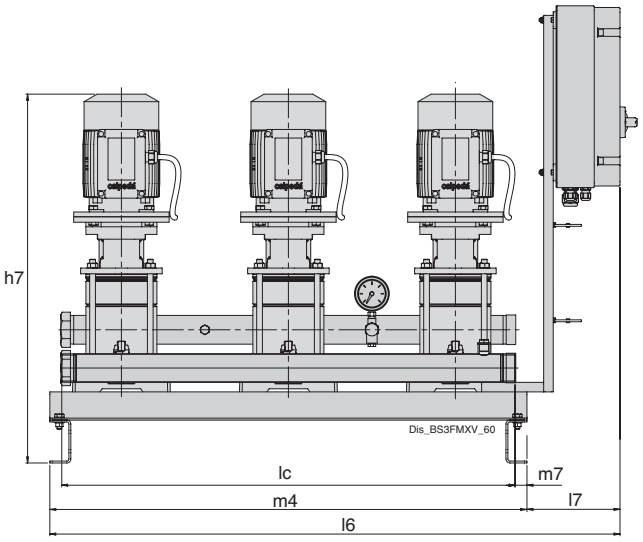


| TYPE | Manifolds | | mm | | | | | | | | | | | | | Kg |
|---|---|---|---|---|---|---|---|---|---|---|---|---|---|---|---|---|
| | DN1 | DN2 | a | a1 | fG | h2 | h3 | h7 | h9 | l6 | l7 | lc | m4 | n4 | w4 | Weight |
| BS3F 3 MXV 25-304 O | G 2 | G 2 | 593 | 32 | 657 | 279 | 199 | 771 | 969 | 1195 | 195 | 950 | 1000 | 476 | 84 | 136 |
| BS3F 3 MXV 25-305 O | G 2 | G 2 | 593 | 32 | 657 | 279 | 199 | 795 | 969 | 1195 | 195 | 950 | 1000 | 476 | 84 | 136 |
| BS3F 3 MXV 25-306 O | G 2 | G 2 | 593 | 32 | 657 | 279 | 199 | 819 | 969 | 1195 | 195 | 950 | 1000 | 476 | 84 | 136 |
| BS3F 3 MXV 25-307 O | G 2 | G 2 | 593 | 32 | 657 | 279 | 199 | 843 | 969 | 1195 | 195 | 950 | 1000 | 476 | 84 | 136 |
| BS3F 3 MXV 25-308 O | G 2 | G 2 | 593 | 32 | 657 | 279 | 199 | 867 | 969 | 1195 | 195 | 950 | 1000 | 476 | 84 | 136 |
| BS3F 3 MXV 25-310 O | G 2 | G 2 | 593 | 32 | 657 | 279 | 199 | 916 | 969 | 1195 | 195 | 950 | 1000 | 476 | 84 | 136 |
| BS3F 3 MXV 25-312 O | G 2 | G 2 | 593 | 32 | 657 | 279 | 199 | 1004 | 969 | 1195 | 195 | 950 | 1000 | 476 | 84 | 136 |
| BS3F 3 MXV 32-504 O | G 2 1/2 | G 2 1/2 | 650 | 40 | 730 | 299 | 199 | 771 | 969 | 1195 | 195 | 950 | 1000 | 476 | 113 | 136 |
| BS3F 3 MXV 32-505 O | G 2 1/2 | G 2 1/2 | 650 | 40 | 730 | 299 | 199 | 795 | 969 | 1195 | 195 | 950 | 1000 | 476 | 113 | 136 |
| BS3F 3 MXV 32-506 O | G 2 1/2 | G 2 1/2 | 650 | 40 | 730 | 299 | 199 | 918 | 969 | 1195 | 195 | 950 | 1000 | 476 | 113 | 136 |
| BS3F 3 MXV 32-507 O | G 2 1/2 | G 2 1/2 | 650 | 40 | 730 | 299 | 199 | 843 | 969 | 1195 | 195 | 950 | 1000 | 476 | 113 | 136 |
| BS3F 3 MXV 32-508 O | G 2 1/2 | G 2 1/2 | 650 | 40 | 730 | 299 | 199 | 907 | 969 | 1195 | 195 | 950 | 1000 | 476 | 113 | 136 |
| BS3F 3 MXV 32-510 O | G 2 1/2 | G 2 1/2 | 650 | 40 | 730 | 299 | 199 | 956 | 969 | 1195 | 195 | 950 | 1000 | 476 | 113 | 136 |
| BS3F 3 MXV 32-512 O | G 2 1/2 | G 2 1/2 | 650 | 40 | 730 | 299 | 199 | 1020 | 969 | 1195 | 195 | 950 | 1000 | 476 | 113 | 136 |
| BS3F 3 MXV 40-904 O | G 3 | G 3 | 746 | 48 | 842 | 349 | 229 | 816 | 969 | 1195 | 195 | 950 | 1000 | 476 | 145 | 136 |
| BS3F 3 MXV 40-905 O | G 3 | G 3 | 746 | 48 | 842 | 349 | 229 | 886 | 969 | 1195 | 195 | 950 | 1000 | 476 | 145 | 136 |
| BS3F 3 MXV 40-906 O | G 3 | G 3 | 746 | 48 | 842 | 349 | 229 | 916 | 969 | 1195 | 195 | 950 | 1000 | 476 | 145 | 136 |
| BS3F 3 MXV 40-907 O | G 3 | G 3 | 746 | 48 | 842 | 349 | 229 | 962 | 969 | 1195 | 195 | 950 | 1000 | 476 | 145 | 136 |
| BS3F 3 MXV 40-908 O | G 3 | G 3 | 746 | 48 | 842 | 349 | 229 | 992 | 969 | 1195 | 195 | 950 | 1000 | 476 | 145 | 224 |
| BS3F 3 MXV 40-910 O | G 3 | G 3 | 746 | 48 | 842 | 349 | 229 | 1052 | 969 | 1195 | 195 | 950 | 1000 | 476 | 145 | 136 |
| BS3F 3 MXV 40-911 O | G 3 | G 3 | 746 | 48 | 842 | 349 | 229 | 1082 | 969 | 1195 | 195 | 950 | 1000 | 476 | 145 | 136 |

Non-binding dimensions to be checked when ordering

# BS. MXV

calpeda

## Dimensions and weights

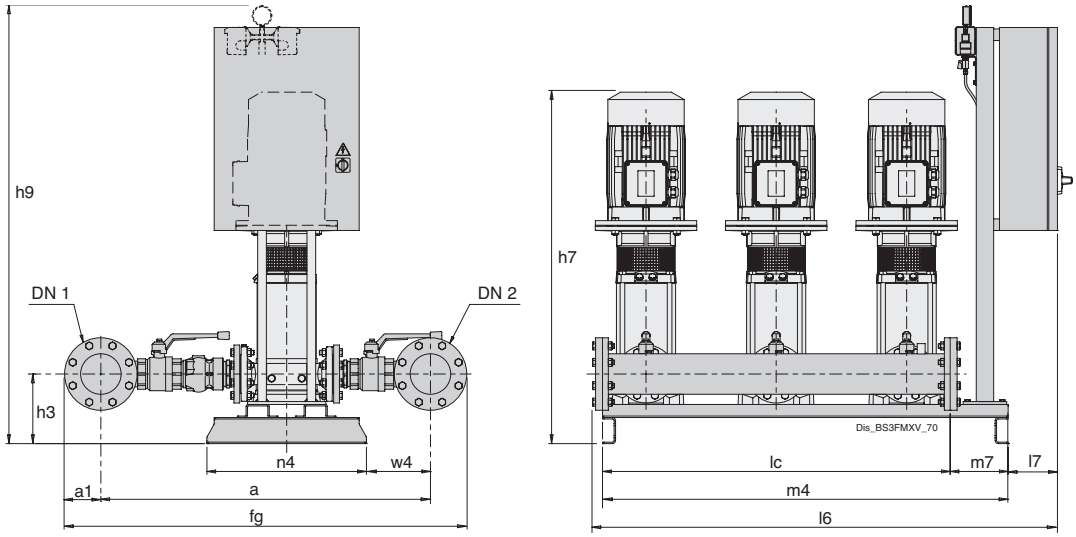


| TYPE | Manifolds | | mm | | | | | | | | | | | | Kg |
|---|---|---|---|---|---|---|---|---|---|---|---|---|---|---|---|
| | DN1 | DN2 | a | a1 | fG | h3 | h7 | h9 | l6 | l7 | lc | m4 | n4 | w4 | Weight |
| BS3F 3 MXV 50-1503/A | 100 | 100 | 880 | 110 | 1100 | 296 | 1005 | 1020 | 1572 | 140 | 1200 | 1400 | 550 | 94 | 194 |
| BS3F 3 MXV 50-1504 | 100 | 100 | 880 | 110 | 1100 | 296 | 1051 | 1020 | 1572 | 140 | 1200 | 1400 | 550 | 94 | 339 |
| BS3F 3 MXV 50-1505 | 100 | 100 | 880 | 110 | 1100 | 296 | 1099 | 1020 | 1572 | 140 | 1200 | 1400 | 550 | 94 | 194 |
| BS3F 3 MXV 50-1506 | 100 | 100 | 880 | 110 | 1100 | 296 | 1239 | 1220 | 1572 | 140 | 1200 | 1400 | 550 | 94 | 194 |
| BS3F 3 MXV 50-1507 | 100 | 100 | 880 | 110 | 1100 | 296 | 1287 | 1220 | 1572 | 140 | 1200 | 1400 | 550 | 94 | 194 |
| BS3F 3 MXV 50-1508/A | 100 | 100 | 880 | 110 | 1100 | 296 | 1335 | 1408 | 1652 | 220 | 1200 | 1400 | 550 | 94 | 486 |
| BS3F 3 MXV 50-1509 | 100 | 100 | 880 | 110 | 1100 | 296 | 1382 | 1408 | 1652 | 220 | 1200 | 1400 | 550 | 94 | 194 |
| BS3F 3 MXV 50-1510 | 100 | 100 | 880 | 110 | 1100 | 296 | 1430 | 1408 | 1652 | 220 | 1200 | 1400 | 550 | 94 | 194 |
| BS3F 3 MXV 50-2003 | 100 | 100 | 880 | 110 | 1100 | 296 | 1003 | 1020 | 1572 | 140 | 1200 | 1400 | 550 | 94 | 194 |
| BS3F 3 MXV 50-2004 | 100 | 100 | 880 | 110 | 1100 | 296 | 1038 | 1020 | 1572 | 140 | 1200 | 1400 | 550 | 94 | 194 |
| BS3F 3 MXV 50-2005 | 100 | 100 | 880 | 110 | 1100 | 296 | 1190 | 1020 | 1572 | 140 | 1200 | 1400 | 550 | 94 | 194 |
| BS3F 3 MXV 50-2006 | 100 | 100 | 880 | 110 | 1100 | 296 | 1238 | 1408 | 1572 | 140 | 1200 | 1400 | 550 | 94 | 194 |
| BS3F 3 MXV 50-2007 | 100 | 100 | 880 | 110 | 1100 | 296 | 1286 | 1408 | 1572 | 140 | 1200 | 1400 | 550 | 94 | 482 |
| BS3F 3 MXV 50-2008 | 100 | 100 | 880 | 110 | 1100 | 296 | 1438 | - | 1652 | 220 | 1200 | 1400 | 550 | 94 | 194 |
| BS3F 3 MXV 50-2009 | 100 | 100 | 880 | 110 | 1100 | 296 | 1486 | - | 1652 | 220 | 1200 | 1400 | 550 | 94 | 194 |
| BS3F 3 MXV 65-3202/D | 125 | 125 | 1156 | 125 | 1406 | 291 | 903 | 1500 | 1574 | 140 | 1200 | 1400 | 550 | 284 | - |
| BS3F 3 MXV 65-3203/C | 125 | 125 | 1156 | 125 | 1406 | 291 | 997 | 1500 | 1574 | 140 | 1200 | 1400 | 550 | 284 | - |
| BS3F 3 MXV 65-3204/C | 125 | 125 | 1156 | 125 | 1406 | 291 | 1043 | 1500 | 1574 | 140 | 1200 | 1400 | 550 | 284 | - |
| BS3F 3 MXV 65-3205/D | 125 | 125 | 1156 | 125 | 1406 | 291 | 1239 | 1713 | 1654 | 220 | 1200 | 1400 | 550 | 284 | - |
| BS3F 3 MXV 65-3206/D | 125 | 125 | 1156 | 125 | 1406 | 291 | 1285 | 1713 | 1654 | 220 | 1200 | 1400 | 550 | 284 | - |
| BS3F 3 MXV 65-3207/D | 125 | 125 | 1156 | 125 | 1406 | 291 | 1356 | 1713 | 1654 | 220 | 1200 | 1400 | 550 | 284 | - |
| BS3F 3 MXV 80-4802/C | 150 | 150 | 1240 | 142.5 | 1525 | 291 | 990 | 1500 | 1577 | 140 | 1200 | 1400 | 550 | 313 | - |
| BS3F 3 MXV 80-4803/C | 150 | 150 | 1240 | 142.5 | 1525 | 291 | 1051 | 1500 | 1577 | 140 | 1200 | 1400 | 550 | 313 | - |
| BS3F 3 MXV 80-4804/D | 150 | 150 | 1240 | 142.5 | 1525 | 291 | 1262 | 1713 | 1657 | 220 | 1200 | 1400 | 550 | 313 | - |
| BS3F 3 MXV 80-4805/D | 150 | 150 | 1240 | 142.5 | 1525 | 291 | 1349 | 1713 | 1657 | 220 | 1200 | 1400 | 550 | 313 | - |
| BS3F 3 MXV 80-4806/D | 150 | 150 | 1240 | 142.5 | 1525 | 291 | 1410 | 1713 | 1657 | 220 | 1200 | 1400 | 550 | 313 | - |
| BS3F 3 MXV 80-4807/E | 150 | 150 | 1240 | 142.5 | 1525 | 291 | 1548 | 1713 | - | - | 1200 | 1400 | 550 | 313 | - |
| BS3F 3 MXV 100-6502-2R/A | 200 | 200 | 1318 | 170 | 1658 | 386 | 1414 | - | - | - | 1500 | 1650 | 900 | 65 | - |
| BS3F 3 MXV 100-6502/A | 200 | 200 | 1318 | 170 | 1658 | 386 | 1554 | - | - | - | 1500 | 1650 | 900 | 65 | - |
| BS3F 3 MXV 100-6503-2R/A | 200 | 200 | 1318 | 170 | 1658 | 386 | 1671 | - | - | - | 1500 | 1650 | 900 | 65 | - |
| BS3F 3 MXV 100-6503/B | 200 | 200 | 1318 | 170 | 1658 | 386 | 1725 | - | - | - | 1500 | 1650 | 900 | 65 | - |
| BS3F 3 MXV 100-6504-2R/B | 200 | 200 | 1318 | 170 | 1658 | 386 | 1817 | - | - | - | 1500 | 1650 | 900 | 65 | - |
| BS3F 3 MXV 100-6504/A | 200 | 200 | 1318 | 170 | 1658 | 386 | 1817 | - | - | - | 1500 | 1650 | 900 | 65 | - |
| BS3F 3 MXV 100-6505-2R/A | 200 | 200 | 1318 | 170 | 1658 | 386 | 1988 | - | - | - | 1500 | 1650 | 900 | 65 | - |
| BS3F 3 MXV 100-6505/A | 200 | 200 | 1318 | 170 | 1658 | 386 | 1988 | - | - | - | 1500 | 1650 | 900 | 65 | - |
| BS3F 3 MXV 100-9002-2R/A | 200 | 200 | 1561 | 170 | 1901 | 390 | 1988 | - | - | - | 1500 | 1850 | 1050 | 280 | - |
| BS3F 3 MXV 100-9002/A | 200 | 200 | 1561 | 170 | 1901 | 390 | 1558 | - | - | - | 1500 | 1850 | 1050 | 280 | - |
| BS3F 3 MXV 100-9003-2R/B | 200 | 200 | 1561 | 170 | 1901 | 390 | 1583 | - | - | - | 1500 | 1850 | 1050 | 280 | - |
| BS3F 3 MXV 100-9003/A | 200 | 200 | 1561 | 170 | 1901 | 390 | 1729 | - | - | - | 1500 | 1850 | 1050 | 280 | - |
| BS3F 3 MXV 100-9004-2R/A | 200 | 200 | 1561 | 170 | 1901 | 390 | 1924 | - | - | - | 1500 | 1850 | 1050 | 280 | - |
| BS3F 3 MXV 100-9004/A | 200 | 200 | 1561 | 170 | 1901 | 390 | 1729 | - | - | - | 1500 | 1850 | 1050 | 280 | - |
| BS3F 3 MXV 100-9005-2R/A | 200 | 200 | 1561 | 170 | 1901 | 390 | 1924 | - | - | - | 1500 | 1850 | 1050 | 280 | - |

Non-binding dimensions to be checked when ordering
Missing dimensions on request

# BS. MXV

## Dimensions and weights

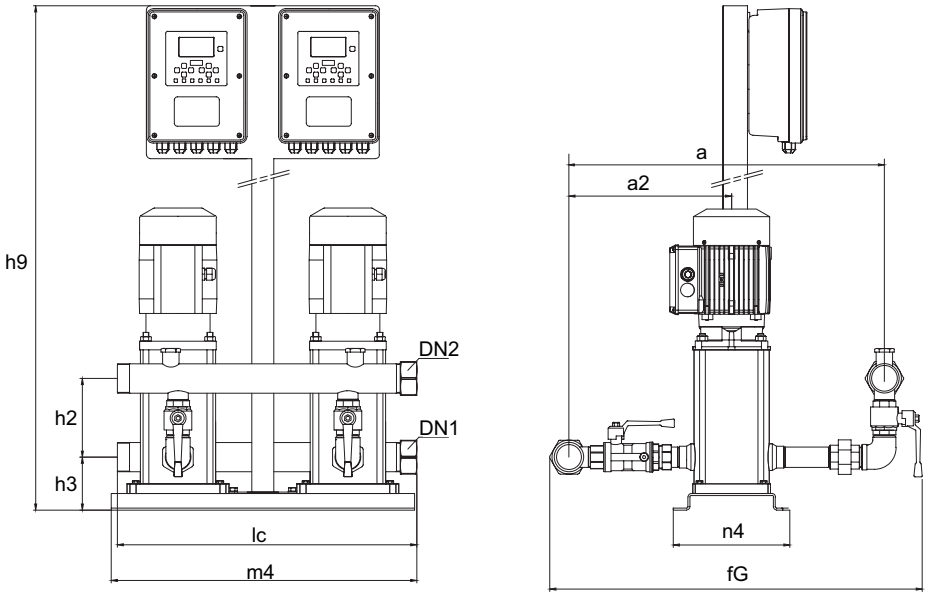


| TYPE | Manifolds | | mm | | | | | | | | | Kg |
|---|---|---|---|---|---|---|---|---|---|---|---|---|
| | DN1 | DN2 | a | a2 | fG | h2 | h3 | h9 | lc | m4 | n4 | Weight |
| BS2V 2 MXV 50-1504-WALL | G 3 | G 3 | 825 | 495 | 920 | 148 | 148 | 1408 | 600 | 1000 | 406 | 210 |
| BS2V 2 MXV 50-1505-WALL | G 3 | G 3 | 825 | 495 | 920 | 148 | 148 | 1408 | 600 | 1000 | 406 | - |
| BS2V 2 MXV 50-1506-WALL | G 3 | G 3 | 825 | 495 | 920 | 148 | 148 | 1408 | 600 | 1000 | 406 | - |
| BS2V 2 MXV 50-1507-WALL | G 3 | G 3 | 825 | 495 | 920 | 148 | 148 | 1408 | 600 | 1000 | 406 | - |
| BS2V 2 MXV 50-1508/A-WALL | G 3 | G 3 | 825 | 495 | 920 | 148 | 148 | 1408 | 600 | 1000 | 406 | - |
| BS2V 2 MXV 50-1509-WALL | G 3 | G 3 | 825 | 495 | 920 | 148 | 148 | 1408 | 600 | 1000 | 406 | - |
| BS2V 2 MXV 50-1510-WALL | G 3 | G 3 | 825 | 495 | 920 | 148 | 148 | 1408 | 600 | 1000 | 406 | - |
| BS2V 2 MXV 50-1512-WALL | G 3 | G 3 | 825 | 495 | 920 | 148 | 148 | 1408 | 600 | 1000 | 406 | - |
| BS2V 2 MXV 50-1515-WALL | G 3 | G 3 | 825 | 495 | 920 | 148 | 148 | 1408 | 600 | 1000 | 406 | - |
| BS2V 2 MXV 50-1517-WALL | G 3 | G 3 | 825 | 495 | 920 | 148 | 148 | 1408 | 600 | 1000 | 406 | - |
| BS2V 2 MXV 50-2003-WALL | G 3 | G 3 | 825 | 495 | 920 | 148 | 148 | 1408 | 600 | 1000 | 406 | - |
| BS2V 2 MXV 50-2004-WALL | G 3 | G 3 | 825 | 495 | 920 | 148 | 148 | 1408 | 600 | 1000 | 406 | - |
| BS2V 2 MXV 50-2005-WALL | G 3 | G 3 | 825 | 495 | 920 | 148 | 148 | 1408 | 600 | 1000 | 406 | - |
| BS2V 2 MXV 50-2006-WALL | G 3 | G 3 | 825 | 495 | 920 | 148 | 148 | 1408 | 600 | 1000 | 406 | - |
| BS2V 2 MXV 50-2007-WALL | G 3 | G 3 | 825 | 495 | 920 | 148 | 148 | 1408 | 600 | 1000 | 406 | - |
| BS2V 2 MXV 50-2008-WALL | G 3 | G 3 | 825 | 495 | 920 | 148 | 148 | 1408 | 600 | 1000 | 406 | - |
| BS2V 2 MXV 50-2009-WALL | G 3 | G 3 | 825 | 495 | 920 | 148 | 148 | 1408 | 600 | 1000 | 406 | - |
| BS2V 2 MXV 50-2011-WALL | G 3 | G 3 | 825 | 495 | 920 | 148 | 148 | 1408 | 600 | 1000 | 406 | - |
| BS2V 2 MXV 50-2015-WALL | G 3 | G 3 | 825 | 495 | 920 | 148 | 148 | 1408 | 600 | 1000 | 406 | - |

Non-binding dimensions to be checked when ordering

# BS. MXV

## Dimensions and weights

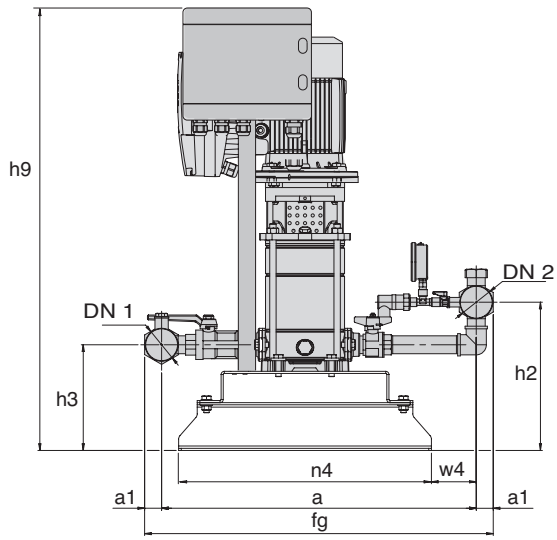


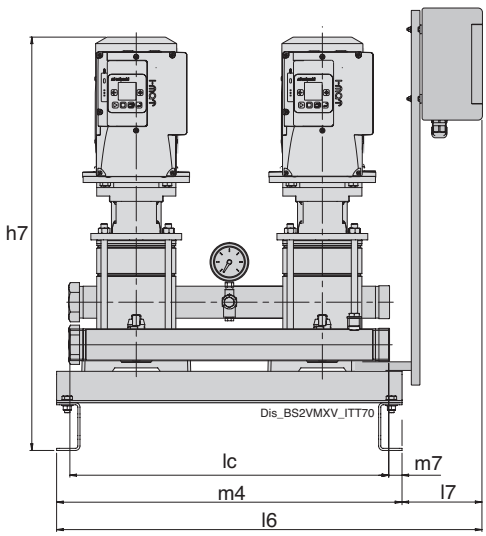


| TYPE | Manifolds | | mm | | | | | | | | | | | | | Kg |
|---|---|---|---|---|---|---|---|---|---|---|---|---|---|---|---|---|
| | DN1 | DN2 | a | a1 | fG | h2 | h3 | h7 | h9 | l6 | l7 | lc | m4 | n4 | w4 | Weight |
| BS2V 2 MXV 25-304 O-ITT | G 1 1/2 | G 1 1/2 | 589 | 26.5 | 642 | 170 | 94 | 666 | 884 | 825 | 200 | 600 | 625 | 365 | 140 | - |
| BS2V 2 MXV 25-305 O-ITT | G 1 1/2 | G 1 1/2 | 589 | 26.5 | 642 | 170 | 94 | 690 | 884 | 825 | 200 | 600 | 625 | 365 | 140 | - |
| BS2V 2 MXV 25-306 O-ITT | G 1 1/2 | G 1 1/2 | 589 | 26.5 | 642 | 170 | 94 | 714 | 884 | 825 | 200 | 600 | 625 | 365 | 140 | - |
| BS2V 2 MXV 25-307 O-ITT | G 1 1/2 | G 1 1/2 | 589 | 26.5 | 642 | 170 | 94 | 738 | 884 | 825 | 200 | 600 | 625 | 365 | 140 | 100 |
| BS2V 2 MXV 25-308 O-ITT | G 1 1/2 | G 1 1/2 | 589 | 26.5 | 642 | 170 | 94 | 762 | 884 | 825 | 200 | 600 | 625 | 365 | 140 | - |
| BS2V 2 MXV 25-310 O-ITT | G 1 1/2 | G 1 1/2 | 589 | 26.5 | 642 | 170 | 94 | 811 | 884 | 825 | 200 | 600 | 625 | 365 | 140 | - |
| BS2V 2 MXV 25-312 O-ITT | G 1 1/2 | G 1 1/2 | 589 | 26.5 | 642 | 170 | 94 | 899 | 884 | 825 | 200 | 600 | 625 | 365 | 140 | - |
| BS2V 2 MXV 32-504 O-ITT | G 2 1/2 | G 2 1/2 | 642 | 40 | 706 | 186 | 94 | 666 | 884 | 825 | 200 | 600 | 625 | 365 | 168 | - |
| BS2V 2 MXV 32-505 O-ITT | G 2 1/2 | G 2 1/2 | 642 | 40 | 706 | 186 | 94 | 690 | 884 | 825 | 200 | 600 | 625 | 365 | 168 | 99.2 |
| BS2V 2 MXV 32-506 O-ITT | G 2 1/2 | G 2 1/2 | 642 | 40 | 706 | 186 | 94 | 714 | 884 | 825 | 200 | 600 | 625 | 365 | 168 | 104.5 |
| BS2V 2 MXV 32-507 O-ITT | G 2 1/2 | G 2 1/2 | 642 | 40 | 706 | 186 | 94 | 738 | 884 | 825 | 200 | 600 | 625 | 365 | 168 | 105.5 |
| BS2V 2 MXV 32-508 O-ITT | G 2 1/2 | G 2 1/2 | 642 | 40 | 706 | 186 | 94 | 802 | 884 | 825 | 200 | 600 | 625 | 365 | 168 | 114.5 |
| BS2V 2 MXV 32-510 O-ITT | G 2 1/2 | G 2 1/2 | 642 | 40 | 706 | 186 | 94 | 851 | 884 | 825 | 200 | 600 | 625 | 365 | 168 | 118.1 |
| BS2V 2 MXV 32-512 O-ITT | G 2 1/2 | G 2 1/2 | 642 | 40 | 706 | 186 | 94 | 915 | 884 | 825 | 200 | 600 | 625 | 365 | 168 | 135.2 |
| BS2V 2 MXV 40-904 O-ITT | G 2 1/2 | G 2 1/2 | 740 | 40 | 820 | 238 | 124 | 711 | 884 | 825 | 200 | 600 | 625 | 365 | 200 | 114 |
| BS2V 2 MXV 40-905 O-ITT | G 2 1/2 | G 2 1/2 | 740 | 40 | 820 | 238 | 124 | 781 | 884 | 825 | 200 | 600 | 625 | 365 | 200 | 123.5 |
| BS2V 2 MXV 40-906 O-ITT | G 2 1/2 | G 2 1/2 | 740 | 40 | 820 | 238 | 124 | 811 | 884 | 825 | 200 | 600 | 625 | 365 | 200 | 125.6 |
| BS2V 2 MXV 40-907 O-ITT | G 2 1/2 | G 2 1/2 | 740 | 40 | 820 | 238 | 124 | 857 | 884 | 825 | 200 | 600 | 625 | 365 | 200 | - |
| BS2V 2 MXV 40-908 O-ITT | G 2 1/2 | G 2 1/2 | 740 | 40 | 820 | 238 | 124 | 887 | 884 | 825 | 200 | 600 | 625 | 365 | 200 | 143.6 |
| BS2V 2 MXV 40-910 O-ITT | G 2 1/2 | G 2 1/2 | 740 | 40 | 820 | 238 | 124 | 947 | 884 | 825 | 200 | 600 | 625 | 365 | 200 | 154.6 |
| BS2V 2 MXV 40-911 O-ITT | G 2 1/2 | G 2 1/2 | 740 | 40 | 820 | 170 | 94 | 977 | 884 | 825 | 200 | 600 | 625 | 365 | 200 | - |

Non-binding dimensions to be checked when ordering

# BS. MXV

## Dimensions and weights

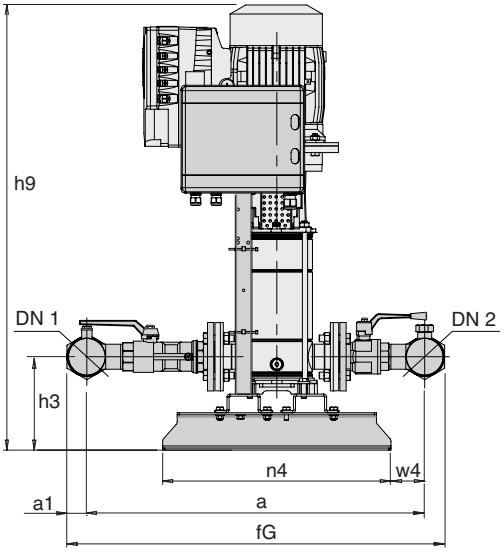


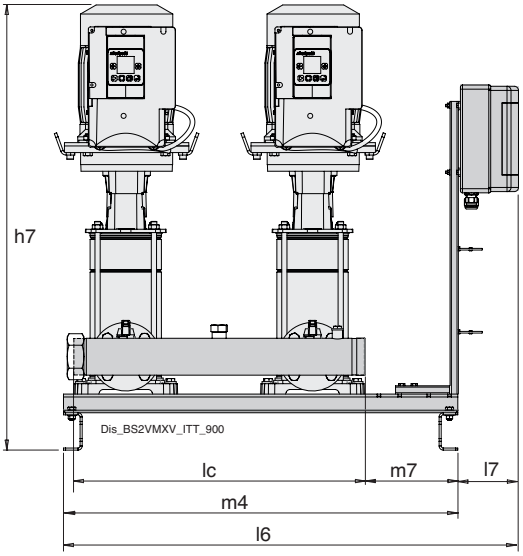


| TYPE | Manifolds | | mm | | | | | | | | | | | | Kg |
|---|---|---|---|---|---|---|---|---|---|---|---|---|---|---|---|
| | DN1 | DN2 | a | a1 | fG | h3 | h7 | h9 | l6 | l7 | lc | m4 | n4 | w4 | Weight |
| BS2V 2 MXV 50-1503/A-ITT | G 3 | G 3 | 816 | 48 | 913 | 225 | 934 | 975 | 1110 | 145 | 700 | 82 | 550 | 82 | 184 |
| BS2V 2 MXV 50-1504-ITT | G 3 | G 3 | 816 | 48 | 913 | 225 | 980 | 975 | 1110 | 145 | 700 | 82 | 550 | 82 | 187 |
| BS2V 2 MXV 50-1505-ITT | G 3 | G 3 | 816 | 48 | 913 | 225 | 1028 | 975 | 1110 | 145 | 700 | 82 | 550 | 82 | 200 |
| BS2V 2 MXV 50-1506-ITT | G 3 | G 3 | 816 | 48 | 913 | 225 | 1167 | 975 | 1110 | 145 | 700 | 82 | 550 | 82 | 252 |
| BS2V 2 MXV 50-1507-ITT | G 3 | G 3 | 816 | 48 | 913 | 225 | 1215 | 1175 | 1110 | 145 | 700 | 82 | 550 | 82 | 254 |
| BS2V 2 MXV 50-1508/A-ITT | G 3 | G 3 | 816 | 48 | 913 | 225 | 1263 | 1175 | 1110 | 145 | 700 | 82 | 550 | 82 | 260 |
| BS2V 2 MXV 50-1509-ITT | G 3 | G 3 | 816 | 48 | 913 | 225 | 1311 | 1175 | 1110 | 145 | 700 | 82 | 550 | 82 | 289.5 |
| BS2V 2 MXV 50-1510-ITT | G 3 | G 3 | 816 | 48 | 913 | 225 | 1359 | 1175 | 1110 | 145 | 700 | 82 | 550 | 82 | - |
| BS2V 2 MXV 50-2003-ITT | G 3 | G 3 | 816 | 48 | 913 | 225 | 932 | 975 | 1142 | 145 | 700 | 82 | 550 | 82 | - |
| BS2V 2 MXV 50-2004-ITT | G 3 | G 3 | 816 | 48 | 913 | 225 | 967 | 975 | 1142 | 145 | 700 | 82 | 550 | 82 | 195 |
| BS2V 2 MXV 50-2005-ITT | G 3 | G 3 | 816 | 48 | 913 | 225 | 1119 | 975 | 1142 | 145 | 700 | 82 | 550 | 82 | 248 |
| BS2V 2 MXV 50-2006-ITT | G 3 | G 3 | 816 | 48 | 913 | 225 | 1167 | 975 | 1142 | 145 | 700 | 82 | 550 | 82 | 280 |
| BS2V 2 MXV 50-2007-ITT | G 3 | G 3 | 816 | 48 | 913 | 225 | 1215 | 1175 | 1142 | 145 | 700 | 82 | 550 | 82 | 281.5 |
| BS2V 2 MXV 50-2008-ITT | G 3 | G 3 | 816 | 48 | 913 | 225 | 1367 | 1175 | 1142 | 145 | 700 | 82 | 550 | 82 | 351.5 |
| BS2V 2 MXV 50-2009-ITT | G 3 | G 3 | 816 | 48 | 913 | 225 | 1415 | 1175 | 1142 | 145 | 700 | 82 | 550 | 82 | - |

Non-binding dimensions to be checked when ordering

# BS. MXV

## Dimensions and weights

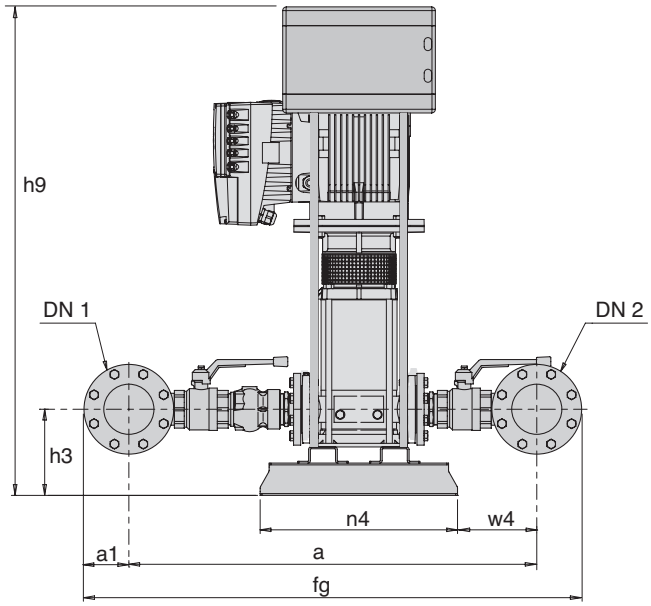


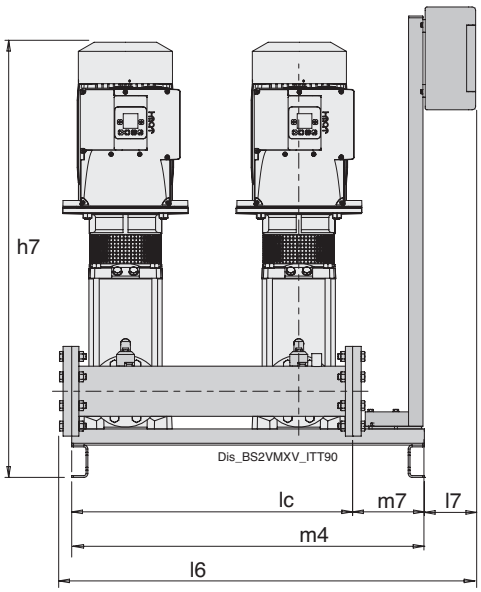


| TYPE | Manifolds | | mm | | | | | | | | | | | | Kg |
|---|---|---|---|---|---|---|---|---|---|---|---|---|---|---|---|
| | DN1 | DN2 | a | a1 | fG | h3 | h7 | h9 | l6 | l7 | lc | m4 | n4 | w4 | Weight |
| BS2V 2 MXV 65-3202/D-ITT | 100 | 100 | 1090 | 110 | 1310 | 240 | 853 | 975 | 1114 | 145 | 750 | 950 | 550 | 231 | 279.5 |
| BS2V 2 MXV 65-3203/C-ITT | 100 | 100 | 1090 | 110 | 1310 | 240 | 947 | 975 | 1114 | 145 | 750 | 950 | 550 | 231 | 320.5 |
| BS2V 2 MXV 65-3204/C-ITT | 100 | 100 | 1090 | 110 | 1310 | 240 | 993 | 975 | 1204 | 145 | 750 | 950 | 550 | 231 | 355 |
| BS2V 2 MXV 65-3205/D-ITT | 100 | 100 | 1090 | 110 | 1310 | 240 | 1189 | 1175 | 1204 | 145 | 750 | 950 | 550 | 231 | 462.5 |
| BS2V 2 MXV 65-3206/D-ITT | 100 | 100 | 1090 | 110 | 1310 | 240 | 1235 | 1175 | 1204 | 145 | 750 | 950 | 550 | 231 | 444 |
| BS2V 2 MXV 65-3207/D-ITT | 100 | 100 | 1090 | 110 | 1310 | 240 | 1306 | 1175 | 1204 | 145 | 750 | 950 | 550 | 231 | - |
| BS2V 2 MXV 80-4802/C-ITT | 125 | 125 | 1191 | 125 | 1441 | 240 | 940 | 975 | 1080 | 145 | 750 | 950 | 550 | 279 | - |
| BS2V 2 MXV 80-4803/C-ITT | 125 | 125 | 1191 | 125 | 1441 | 240 | 1001 | 975 | 1170 | 145 | 750 | 950 | 550 | 279 | 385 |
| BS2V 2 MXV 80-4804/D-ITT | 125 | 125 | 1191 | 125 | 1441 | 240 | 1212 | 1175 | 1170 | 145 | 750 | 950 | 550 | 279 | 492.5 |
| BS2V 2 MXV 80-4805/D-ITT | 125 | 125 | 1191 | 125 | 1441 | 240 | 1299 | 1175 | 1170 | 145 | 750 | 950 | 550 | 279 | - |
| BS2V 2 MXV 80-4806/D-ITT | 125 | 125 | 1191 | 125 | 1441 | 240 | 1360 | 1175 | 1170 | 145 | 750 | 950 | 550 | 279 | - |
| BS2V 2 MXV 80-4807/E-ITT | 125 | 125 | 1191 | 125 | 1441 | 240 | 1498 | 1175 | 1170 | 145 | 750 | 950 | 550 | 279 | - |
| BS2V 2 MXV 100-6501/A-ITT | 150 | 150 | - | 142.5 | - | - | 1302 | - | - | - | 950 | - | - | - | - |
| BS2V 2 MXV 100-6502-2R/A-ITT | 150 | 150 | - | 142.5 | - | - | 1394 | - | - | - | 950 | - | - | - | - |
| BS2V 2 MXV 100-6502/A-ITT | 150 | 150 | - | 142.5 | - | - | 1534 | - | - | - | 950 | - | - | - | - |
| BS2V 2 MXV 100-6503-2R/A-ITT | 150 | 150 | - | 142.5 | - | - | 1651 | - | - | - | 950 | - | - | - | - |
| BS2V 2 MXV 100-6503/B-ITT | 150 | 150 | - | 142.5 | - | - | 1705 | - | - | - | 950 | - | - | - | 782 |
| BS2V 2 MXV 100-6504-2R/B-ITT | 150 | 150 | - | 142.5 | - | - | 1797 | - | - | - | 950 | - | - | - | - |
| BS2V 2 MXV 100-6504/A-ITT | 150 | 150 | - | 142.5 | - | - | 1797 | - | - | - | 950 | - | - | - | - |
| BS2V 2 MXV 100-9001/A-ITT | 200 | 200 | 1543 | 170 | 1883 | 370 | 1306 | - | - | - | 950 | 1300 | 1050 | 260 | - |
| BS2V 2 MXV 100-9002-2R/A-ITT | 200 | 200 | 1543 | 170 | 1883 | 370 | 1538 | - | - | - | 950 | 1300 | 1050 | 260 | 770 |
| BS2V 2 MXV 100-9002/A-ITT | 200 | 200 | 1543 | 170 | 1883 | 370 | 1563 | - | - | - | 950 | 1300 | 1050 | 260 | 879 |
| BS2V 2 MXV 100-9003-2R/B-ITT | 200 | 200 | 1543 | 170 | 1883 | 370 | 1709 | - | - | - | 950 | 1300 | 1050 | 260 | - |
| BS2V 2 MXV 100-9003/A-ITT | 200 | 200 | 1543 | 170 | 1883 | 370 | 1709 | - | - | - | 950 | 1300 | 1050 | 260 | - |

Non-binding dimensions to be checked when ordering

# BS. MXV

## Dimensions and weights

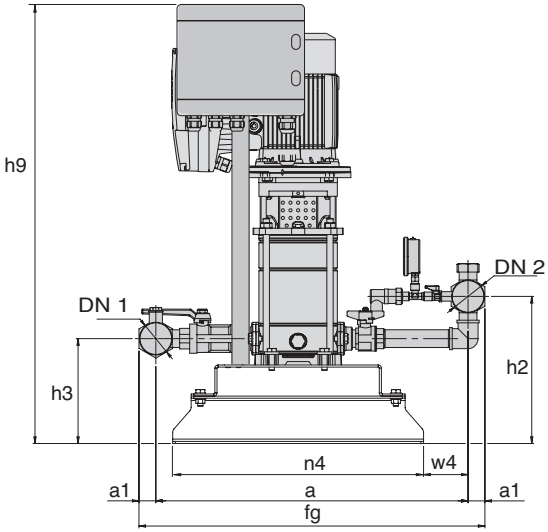


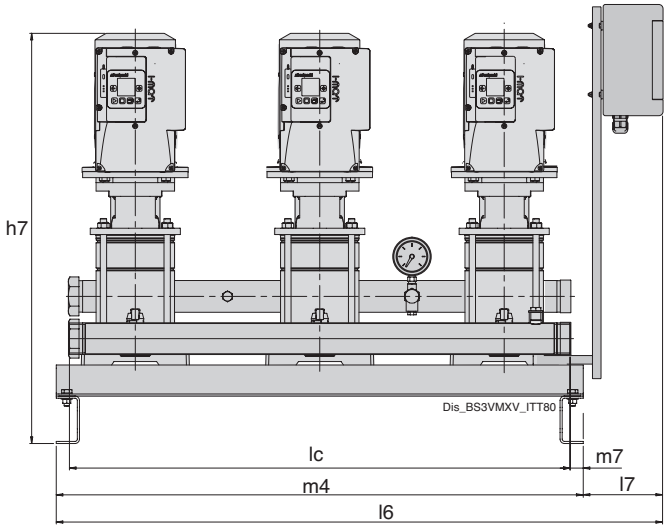


| TYPE | Manifolds | | mm | | | | | | | | | | | | | Kg |
|---|---|---|---|---|---|---|---|---|---|---|---|---|---|---|---|---|
| | DN1 | DN2 | a | a1 | fG | h2 | h3 | h7 | h9 | l6 | l7 | lc | m4 | n4 | w4 | Weight |
| BS3V 3 MXV 25-304 O-ITT | G 2 | G 2 | 593 | 32 | 657 | 279 | 199 | 771 | 989 | 1200 | 200 | 950 | 1000 | 476 | 84 | - |
| BS3V 3 MXV 25-305 O-ITT | G 2 | G 2 | 593 | 32 | 657 | 279 | 199 | 795 | 989 | 1200 | 200 | 950 | 1000 | 476 | 84 | - |
| BS3V 3 MXV 25-306 O-ITT | G 2 | G 2 | 593 | 32 | 657 | 279 | 199 | 819 | 989 | 1200 | 200 | 950 | 1000 | 476 | 84 | - |
| BS3V 3 MXV 25-307 O-ITT | G 2 | G 2 | 593 | 32 | 657 | 279 | 199 | 843 | 989 | 1200 | 200 | 950 | 1000 | 476 | 84 | - |
| BS3V 3 MXV 25-308 O-ITT | G 2 | G 2 | 593 | 32 | 657 | 279 | 199 | 867 | 989 | 1200 | 200 | 950 | 1000 | 476 | 84 | - |
| BS3V 3 MXV 25-310 O-ITT | G 2 | G 2 | 593 | 32 | 657 | 279 | 199 | 916 | 989 | 1200 | 200 | 950 | 1000 | 476 | 84 | - |
| BS3V 3 MXV 25-312 O-ITT | G 2 | G 2 | 593 | 32 | 657 | 279 | 199 | 1004 | 989 | 1200 | 200 | 950 | 1000 | 476 | 84 | - |
| BS3V 3 MXV 32-504 O-ITT | G 2 1/2 | G 2 1/2 | 650 | 40 | 730 | 299 | 199 | 771 | 989 | 1200 | 200 | 950 | 1000 | 476 | 113 | - |
| BS3V 3 MXV 32-505 O-ITT | G 2 1/2 | G 2 1/2 | 650 | 40 | 730 | 299 | 199 | 795 | 989 | 1200 | 200 | 950 | 1000 | 476 | 113 | 156.5 |
| BS3V 3 MXV 32-506 O-ITT | G 2 1/2 | G 2 1/2 | 650 | 40 | 730 | 299 | 199 | 819 | 989 | 1200 | 200 | 950 | 1000 | 476 | 113 | 162.5 |
| BS3V 3 MXV 32-507 O-ITT | G 2 1/2 | G 2 1/2 | 650 | 40 | 730 | 299 | 199 | 843 | 989 | 1200 | 200 | 950 | 1000 | 476 | 113 | - |
| BS3V 3 MXV 32-508 O-ITT | G 2 1/2 | G 2 1/2 | 650 | 40 | 730 | 299 | 199 | 907 | 989 | 1200 | 200 | 950 | 1000 | 476 | 113 | 180 |
| BS3V 3 MXV 32-510 O-ITT | G 2 1/2 | G 2 1/2 | 650 | 40 | 730 | 299 | 199 | 956 | 989 | 1200 | 200 | 950 | 1000 | 476 | 113 | 184.5 |
| BS3V 3 MXV 32-512 O-ITT | G 2 1/2 | G 2 1/2 | 650 | 40 | 730 | 299 | 199 | 1020 | 989 | 1200 | 200 | 950 | 1000 | 476 | 113 | - |
| BS3V 3 MXV 40-904 O-ITT | G 3 | G 3 | 746 | 48 | 842 | 349 | 229 | 816 | 989 | 1200 | 200 | 950 | 1000 | 476 | 145 | - |
| BS3V 3 MXV 40-905 O-ITT | G 3 | G 3 | 746 | 48 | 842 | 349 | 229 | 886 | 989 | 1200 | 200 | 950 | 1000 | 476 | 145 | 195 |
| BS3V 3 MXV 40-906 O-ITT | G 3 | G 3 | 746 | 48 | 842 | 349 | 229 | 916 | 989 | 1200 | 200 | 950 | 1000 | 476 | 145 | - |
| BS3V 3 MXV 40-907 O-ITT | G 3 | G 3 | 746 | 48 | 842 | 349 | 229 | 962 | 989 | 1200 | 200 | 950 | 1000 | 476 | 145 | - |
| BS3V 3 MXV 40-908 O-ITT | G 3 | G 3 | 746 | 48 | 842 | 349 | 229 | 992 | 989 | 1200 | 200 | 950 | 1000 | 476 | 145 | 223.5 |
| BS3V 3 MXV 40-910 O-ITT | G 3 | G 3 | 746 | 48 | 842 | 349 | 229 | 1052 | 989 | 1200 | 200 | 950 | 1000 | 476 | 145 | 242 |
| BS3V 3 MXV 40-911 O-ITT | G 3 | G 3 | 746 | 48 | 842 | 349 | 229 | 1082 | 989 | 1200 | 200 | 950 | 1000 | 476 | 145 | - |

Non-binding dimensions to be checked when ordering

# BS. MXV

calpeda

## Dimensions and weights

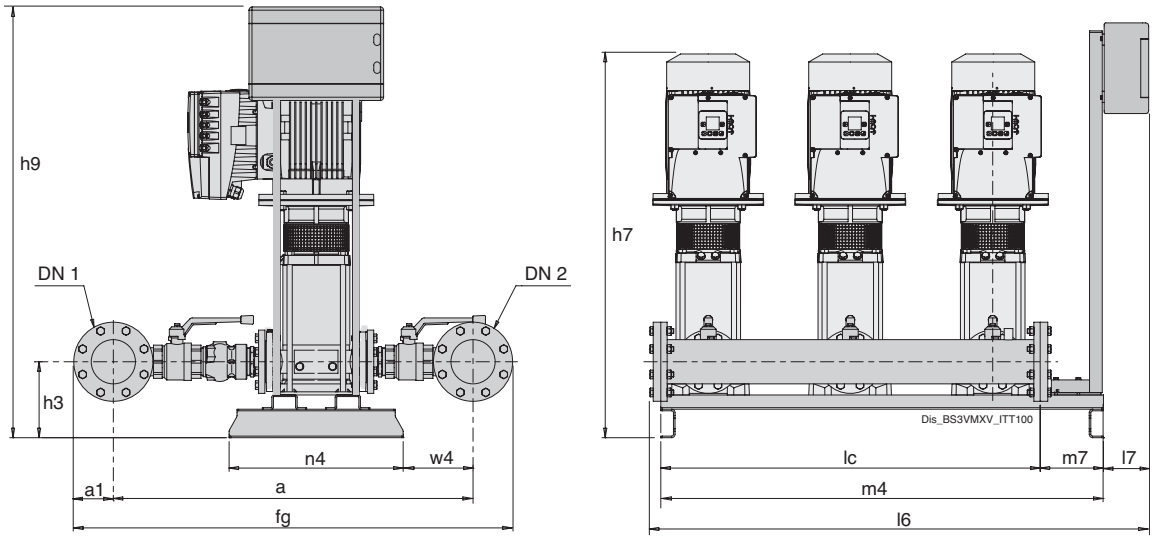


| TYPE | Manifolds | | mm | | | | | | | | | | | | Kg |
|---|---|---|---|---|---|---|---|---|---|---|---|---|---|---|---|
| | DN1 | DN2 | a | a1 | fG | h3 | h7 | h9 | l6 | l7 | lc | m4 | n4 | w4 | Weight |
| BS3V 3 MXV 50-1503/A-ITT | 100 | 100 | 880 | 110 | 1100 | 296 | 1005 | 1040 | 1577 | 145 | 1200 | 1400 | 550 | 94 | - |
| BS3V 3 MXV 50-1504-ITT | 100 | 100 | 880 | 110 | 1100 | 296 | 1051 | 1040 | 1577 | 145 | 1200 | 1400 | 550 | 94 | 359 |
| BS3V 3 MXV 50-1505-ITT | 100 | 100 | 880 | 110 | 1100 | 296 | 1099 | 1040 | 1577 | 145 | 1200 | 1400 | 550 | 94 | 178.5 |
| BS3V 3 MXV 50-1506-ITT | 100 | 100 | 880 | 110 | 1100 | 296 | 1239 | 1240 | 1577 | 145 | 1200 | 1400 | 550 | 94 | 458 |
| BS3V 3 MXV 50-1507-ITT | 100 | 100 | 880 | 110 | 1100 | 296 | 1287 | 1240 | 1577 | 145 | 1200 | 1400 | 550 | 94 | 453.5 |
| BS3V 3 MXV 50-1508/A-ITT | 100 | 100 | 880 | 110 | 1100 | 296 | 1335 | 1240 | 1577 | 145 | 1200 | 1400 | 550 | 94 | 502 |
| BS3V 3 MXV 50-1509-ITT | 100 | 100 | 880 | 110 | 1100 | 296 | 1382 | 1240 | 1577 | 145 | 1200 | 1400 | 550 | 94 | - |
| BS3V 3 MXV 50-1510-ITT | 100 | 100 | 880 | 110 | 1100 | 296 | 1430 | 1240 | 1577 | 145 | 1200 | 1400 | 550 | 94 | - |
| BS3V 3 MXV 50-2003-ITT | 100 | 100 | 880 | 110 | 1100 | 296 | 1003 | 1040 | 1577 | 145 | 1200 | 1400 | 550 | 94 | 349 |
| BS3V 3 MXV 50-2004-ITT | 100 | 100 | 880 | 110 | 1100 | 296 | 1038 | 1040 | 1577 | 145 | 1200 | 1400 | 550 | 94 | 178.5 |
| BS3V 3 MXV 50-2005-ITT | 100 | 100 | 880 | 110 | 1100 | 296 | 1190 | - | 1577 | 145 | 1200 | 1400 | 550 | 94 | - |
| BS3V 3 MXV 50-2006-ITT | 100 | 100 | 880 | 110 | 1100 | 296 | 1238 | 1240 | 1577 | 145 | 1200 | 1400 | 550 | 94 | 490 |
| BS3V 3 MXV 50-2007-ITT | 100 | 100 | 880 | 110 | 1100 | 296 | 1286 | 1240 | 1577 | 145 | 1200 | 1400 | 550 | 94 | 496 |
| BS3V 3 MXV 50-2008-ITT | 100 | 100 | 880 | 110 | 1100 | 296 | 1438 | - | 1577 | 145 | 1200 | 1400 | 550 | 94 | 178.5 |
| BS3V 3 MXV 50-2009-ITT | 100 | 100 | 880 | 110 | 1100 | 296 | 1486 | - | 1577 | 145 | 1200 | 1400 | 550 | 94 | 596 |
| BS3V 3 MXV 65-3202/D-ITT | 125 | 125 | 1156 | 125 | 1406 | 291 | 903 | 1020 | 1579 | 145 | 1200 | 1400 | 550 | 284 | 456 |
| BS3V 3 MXV 65-3203/C-ITT | 125 | 125 | 1156 | 125 | 1406 | 291 | 997 | 1020 | 1579 | 145 | 1200 | 1400 | 550 | 284 | 515 |
| BS3V 3 MXV 65-3204/C-ITT | 125 | 125 | 1156 | 125 | 1406 | 291 | 1043 | 1020 | 1579 | 145 | 1200 | 1400 | 550 | 284 | 559 |
| BS3V 3 MXV 65-3205/D-ITT | 125 | 125 | 1156 | 125 | 1406 | 291 | 1239 | 1220 | 1579 | 145 | 1200 | 1400 | 550 | 284 | - |
| BS3V 3 MXV 65-3206/D-ITT | 125 | 125 | 1156 | 125 | 1406 | 291 | 1285 | 1220 | 1579 | 145 | 1200 | 1400 | 550 | 284 | - |
| BS3V 3 MXV 65-3207/D-ITT | 125 | 125 | 1156 | 125 | 1406 | 291 | 1356 | 1388 | 1704 | 270 | 1200 | 1400 | 550 | 284 | 843 |
| BS3V 3 MXV 80-4802/C-ITT | 125 | 125 | 1240 | 125 | 1525 | 291 | 990 | 1020 | 1582 | 145 | 1200 | 1400 | 550 | 313 | - |
| BS3V 3 MXV 80-4803/C-ITT | 125 | 125 | 1240 | 125 | 1525 | 291 | 1051 | 1020 | 1582 | 145 | 1200 | 1400 | 550 | 313 | 604.5 |
| BS3V 3 MXV 80-4804/D-ITT | 125 | 125 | 1240 | 125 | 1525 | 291 | 1262 | 1220 | 1582 | 145 | 1200 | 1400 | 550 | 313 | 761 |
| BS3V 3 MXV 80-4805/D-ITT | 125 | 125 | 1240 | 125 | 1525 | 291 | 1349 | 1388 | 1707 | 270 | 1200 | 1400 | 550 | 313 | 234 |
| BS3V 3 MXV 80-4806/D-ITT | 125 | 125 | 1240 | 125 | 1525 | 291 | 1410 | 1388 | 1707 | 270 | 1200 | 1400 | 550 | 313 | 890 |
| BS3V 3 MXV 80-4807/E-ITT | 125 | 125 | 1240 | 125 | 1525 | 291 | 1548 | 1388 | 1707 | 270 | 1200 | 1400 | 550 | 313 | - |
| BS3V 3 MXV 100-6501/A-ITT | 150 | 150 | 1318 | 142.5 | 1658 | 386 | 1322 | - | - | - | 1500 | 1650 | 900 | 65 | - |
| BS3V 3 MXV 100-6502-2R/A-ITT | 150 | 150 | 1318 | 142.5 | 1658 | 386 | 1414 | - | - | - | 1500 | 1650 | 900 | 65 | - |
| BS3V 3 MXV 100-6502/A-ITT | 150 | 150 | 1318 | 142.5 | 1658 | 386 | 1554 | - | - | - | 1500 | 1650 | 900 | 65 | - |
| BS3V 3 MXV 100-6503-2R/A-ITT | 150 | 150 | 1318 | 142.5 | 1658 | 386 | 1671 | - | - | - | 1500 | 1650 | 900 | 65 | - |
| BS3V 3 MXV 100-6503/B-ITT | 150 | 150 | 1318 | 142.5 | 1658 | 386 | 1725 | - | - | - | 1500 | 1650 | 900 | 65 | - |
| BS3V 3 MXV 100-6504-2R/B-ITT | 150 | 150 | 1318 | 142.5 | 1658 | 386 | 1817 | - | - | - | 1500 | 1650 | 900 | 65 | - |
| BS3V 3 MXV 100-6504/A-ITT | 150 | 150 | 1318 | 142.5 | 1658 | 386 | 1817 | - | - | - | 1500 | 1650 | 900 | 65 | 1240 |
| BS3V 3 MXV 100-9001/A-ITT | 200 | 200 | 1561 | 170 | 1901 | 390 | 1326 | - | - | - | 1500 | 1850 | 1050 | 280 | - |
| BS3V 3 MXV 100-9002-2R/A-ITT | 200 | 200 | 1561 | 170 | 1901 | 390 | 1558 | - | - | - | 1500 | 1850 | 1050 | 280 | - |
| BS3V 3 MXV 100-9002/A-ITT | 200 | 200 | 1561 | 170 | 1901 | 390 | 1583 | - | - | - | 1500 | 1850 | 1050 | 280 | - |
| BS3V 3 MXV 100-9003-2R/B-ITT | 200 | 200 | 1561 | 170 | 1901 | 390 | 1729 | - | - | - | 1500 | 1850 | 1050 | 280 | 1360 |
| BS3V 3 MXV 100-9003/A-ITT | 200 | 200 | 1561 | 170 | 1901 | 390 | 1729 | - | - | - | 1500 | 1850 | 1050 | 280 | - |

Non-binding dimensions to be checked when ordering

ed. 03/2025

# EJ, DJ

# UNI-EN 12845 fire-fighting systems

# EJ, DJ

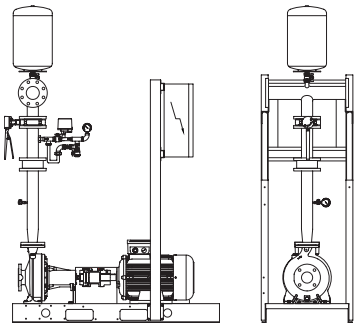

**EJ 10**
UNI-EN 12845 units for feeding fire-extinguishing systems with 1 N series electric main pump

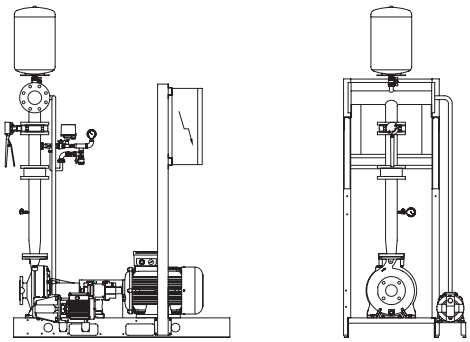

**EJ 11**
UNI-EN 12845 units with 1 electric feed N series pump and compensation pump

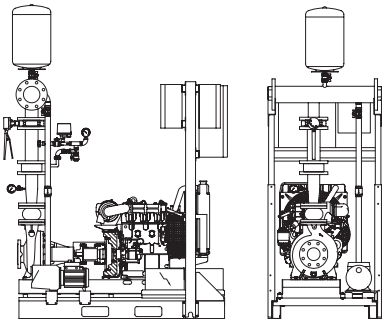

**DJ 11**
UNI-EN 12845 units with 1 diesel feed N series pump and compensation pump

## Construction

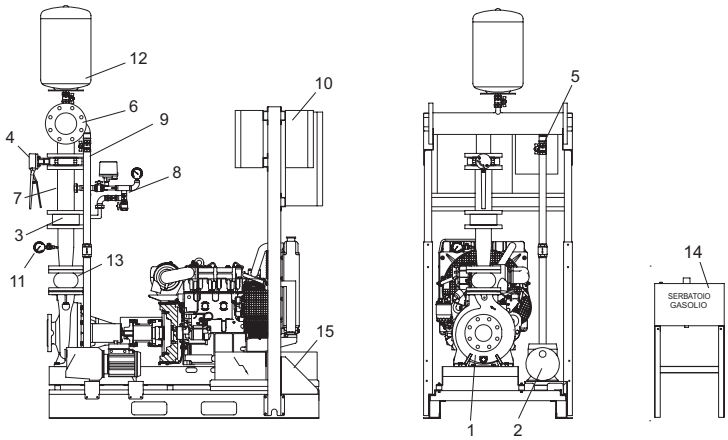


1 Main pump (with diesel motor)
2 Jockey pump
3 Non-return valve
4 Non-return valve
5 Lockable valve
6 Ball valve
7 Delivery manifold
8 Sprinkler connection for protection of pump room
9 Starting system for main pump composed by two pressure switches, one 0-16 bar glycerine filled pressure gauge, ball valve, by-pass circuit.
10 -Electric control panel (one for each pump)
11 Pressure switch for "pump running" signal, re cycling water connection and 0-16 bar glycerine filled pressure gauge.
12 20-lt PN 16 membrane pressure tank
13 Compensating joint for vibration damping
14 Diesel tank on a separate pedestal (6 hour autonomy)
15 Painted steel skid
All the butterfly valves or ball valve are locked in the normal position by means of a lock and key.
On request: anti-vibration couplings in both the suction and delivery sections.

# EJ, DJ

## Construction

Units constructed in accordance with UNI-EN 12845 standards for automatic fire-fighting systems (with sprinkler) and according to UNI 10779 for fire-fighting systems with fire hydrants.
Depending on the model, the units can be equipped with a compensation pump that allows for the system to be kept pressurised without the intervention of the main pumps.
When two pumps are installed, each one shall be capable of providing the specified flows and pressures independently. When three pumps are installed, each pump shall be capable of providing at least 50% of the specified flow at the specified pressure.

## Applications

Supply of automatic fire extinguishing systems with sprinklers and hydrants.

## Functioning mode

The pumps start operating after a fall in the pressure level in the fire extinguishing system.
The first one to start is the compensation pump (where present); if it fails to restore the pressure, the feed pump intervenes.
When there is more than one main pump, the pumps start in cascade sequence, with the starting pressure switches set at different pressure levels.
The pressure switches of the main pumps are used only for starting, as the pumps must be stopped manually for UNI-EN 12845 units or automatically with a timer for UNI 10779 sets.
The recirculation diaphragm allows for operation of the main pumps also when the delivery port is closed (with no consumption of water in the system), avoiding overheating of the water inside the pump body.

## Pumps

**Main pumps.**
The N series centrifugal pumps are coupled with the electric or diesel motor through a bearing coupling. This solution allows to operate on the hydraulic part without moving the motor.

**Jockey pump**
Jockey pump can be a self-priming jet pump, a centrifugal pump with two impellers.
The maximum pressure developed by the jockey pump is always greater than the pressure of the main pumps.

**Electric motor**
Two-pole induction type, 50 Hz, n = 2,900 rpm
Three-phase 230/400V ± 10% up to 3 kW
400/690V ± 10% 4 kW and higher.
Insulation class F.
IP protection: IP55
Construction in accordance with: IEC 60034
Other voltages and frequencies on request.

**Diesel motors (for standardised N-series pumps)**
These are direct-injection pumps fitted with electric control box, fuel tank, starter batteries and silencer.

## Designation

Example: EJ11 N 40-250C
EJ = Series
1 = A feed pump
1 = A compensation pump
N 40-250C = Feed pump type

## Hydraulic components

**Each main pump is fitted with:**
- Butterfly valve in the suction section (on request only for installation with positive suction head).
- Pressure gauge in the delivery section.
- Recirculation diaphragm.
- Non return valve of the accessible swing-type or dual disc non-return valve, depending on the models.
- Butterfly valve in the delivery section.
- Manual test circuit with pressure switches, pressure gauge, nonreturn valve and ball valve.

**The jockey pump is fitted with:**
- Ball valve in the suction section.
- Non-return valve and ball valve in the delivery section.
- Circuit with pressure switch, pressure gauge, non-return valve and ball valve.

**Other components:**
- Delivery manifold.
- pumps installed with positive suction head).
- 20 litre cylindrical tank on the delivery manifold.
- Arrangement for sprinkler connection to the pump compartment
- Pressure switch for pump working signal

**On request:**
- Manifold for flow meter.
- Adjusted-flange, diaphragm type, flow meter.
- Eccentric conical reducers on suction side.
- Interception valves on suction side (for installations under positive suction head).

## Control panels

**Electric main-pump box (electric motor)**
Each main pump has its own electric control board housed in a metal cabinet with IP55 protection. The box contains the devices required for operation and control of the pump.
For motors with a rating equal to or higher than 22 kW pump starting is of the Y/Δ type with fuses, contactors and timer.
- Timer for pumps stop after 20 minutes (UNI 10779)

**The following devices are located on the front of the box:**
- Line-sectioning handle.
- Front panel of the electronic unit.
- Manual-0-Automatic selector with extractible key only an “automatic” position.
- Start/stop buttons
- LED indicating: voltage present, pump running, pump stopped, low pressure.

**Electric main-pump box (diesel motor)**
This cabinet contains the electronic control devices for the control of the diesel motor and the battery chargers for feeding the starter accumulators.
**The following devices are located on the front of the box:**
- Line-sectioning handle.
- Front panel of the electronic unit.
- Manual-0-Automatic selector with extractible key only an “automatic” position.

**Electric jockey-pump box**
When installed, the jockey pump is fitted with its own electric panel, with thermoplastic housing with IP 55 protection.

**Control box (on request).**
To be installed in a place to be looked after, to signal any possible failure of the unit state. It must be connected to V.220 and it gives an acoustic and visual signal for 24 hours.

# EJ, DJ

With 1 electric main pump in operation

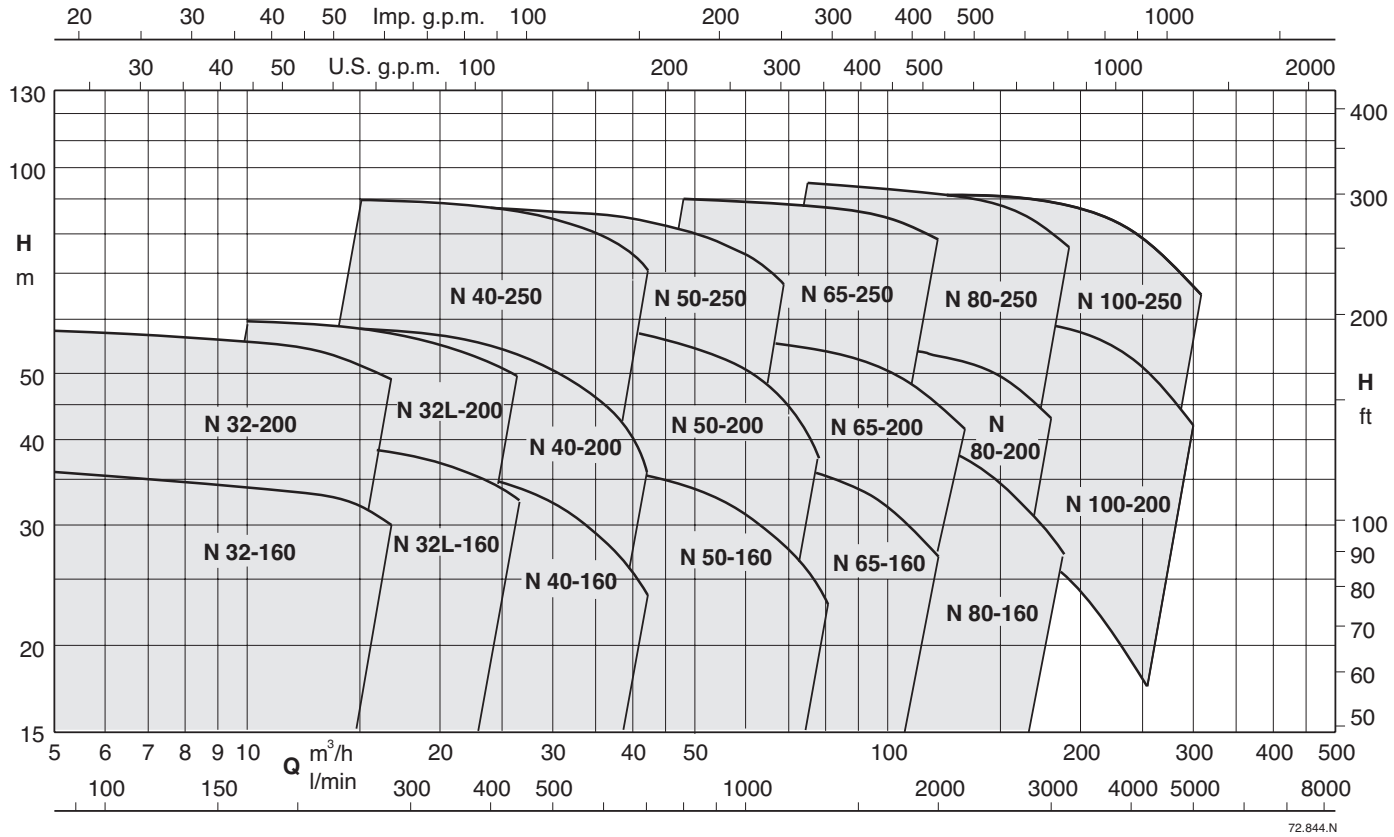


With 2 electric main pumps in operation

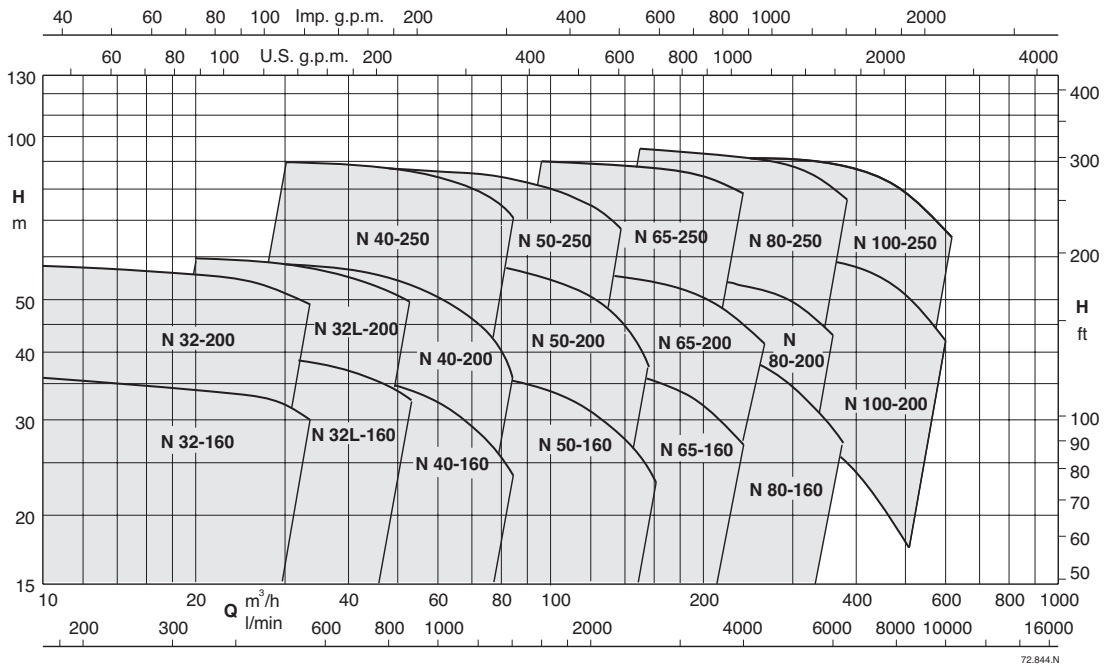


When two pumps are installed, each one shall be capable of providing the specified flows and pressures independently.
When three pumps are installed, each pump shall be capable of providing at least 50% of the specified flow at the specified pressure.

# EJ, DJ

**Accessories**

**ECCENTRICS REDUCTIONS**

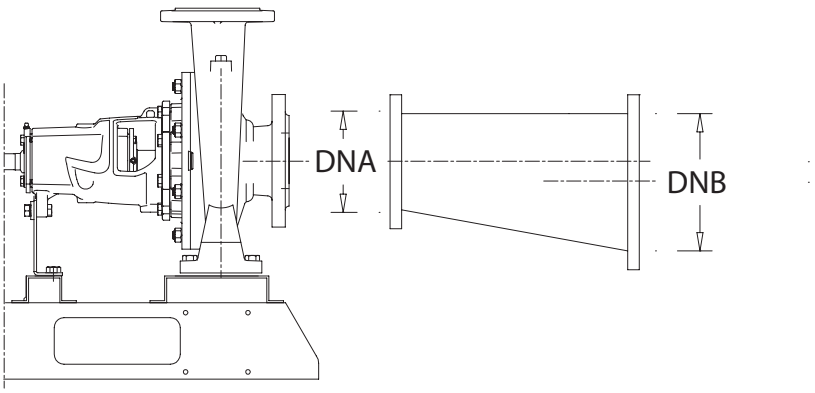


| TYPE | DNA | DNB |
|---|---|---|
| RE50-65 | DN50 | DN65 |
| RE50-80 | DN50 | DN80 |
| RE50-100 | DN50 | DN100 |
| RE50-125 | DN50 | DN125 |
| RE65-80 | DN65 | DN80 |
| RE65-100 | DN65 | DN100 |
| RE65-125 | DN65 | DN125 |
| RE65-150 | DN65 | DN150 |
| RE65-200 | DN65 | DN200 |
| RE80-100 | DN80 | DN100 |
| RE80-125 | DN80 | DN125 |
| RE80-150 | DN80 | DN150 |
| RE80-200 | DN80 | DN200 |
| RE80-250 | DN80 | DN250 |
| RE100-150 | DN100 | DN150 |
| RE100-200 | DN100 | DN200 |
| RE100-250 | DN100 | DN250 |
| RE125-200 | DN125 | DN200 |
| RE125-250 | DN125 | DN250 |
| RE125-300 | DN125 | DN300 |
| RE150-250 | DN150 | DN250 |
| RE150-300 | DN150 | DN300 |
| RE150-350 | DN150 | DN350 |
| RE150-400 | DN150 | DN400 |
| RE200-300 | DN200 | DN300 |
| RE200-350 | DN200 | DN350 |
| RE200-400 | DN200 | DN400 |

Flanged reductions eccentric to be installed in the suction of main pumps, are complete of ¼" out point, ball interception valve and vacuum gauge (or gauge on request).
To choice it take the diameter inlet of the main pumps DNA (limit of standard) and then consult the following tables in order to define the enlargement of the eccentric cone DNB (depending on the type of installation: suction lift or positive head).
Clarification: the previous tables suggest only indications concerning the maximum permissible speed in suction of main pumps, that choice may not be enough because the standard EN 12845 requires also that the suction piping, including all valves and fittings, shall be designed in such a way a sto ensure that the available NPSH at the pump inlet exceeds the required NPSH by at least 1 mt at the maximum pump flow as shown in table 14 of the EN 12845 norm.

Quick selection table for eccentric reductions
To maintain inside the suction pipe of the main pump flow velocities indicated in the standard EN 12845, depending on the maximum flow rate required by the plant, you have to enlarge the suction port of the main pump to the minimum diameter indicated in the following table:

| POSITIVE HEAD INSTALLATION Water Speed (V≤ 1,8 m/s) | | | | | | | | | | |
|---|---|---|---|---|---|---|---|---|---|---|
| Q (l/m) | 0÷358 | 359÷542 | 543÷848 | 849÷1324 | 1325÷1907 | 1908÷3390 | 3391÷5297 | 5298÷7626 | 7627÷10381 | 10382÷13558 |
| Ø min | DN65 | DN80 | DN100 | DN125 | DN150 | DN200 | DN250 | DN300 | DN350 | DN400 |

| SUCTION LIFT INSTALLATION Water Speed (V≤ 1,5 m/s) | | | | | | | | | | |
|---|---|---|---|---|---|---|---|---|---|---|
| Q (l/m) | 0÷452 | 453÷706 | 707÷1103 | 1104÷1589 | 1590÷2824 | 2825÷4413 | 4414÷6355 | 6356÷8650 | 8651÷11299 | 10382÷13558 |
| Ø min | DN80 | DN100 | DN125 | DN150 | DN200 | DN250 | DN300 | DN350 | DN400 | DN400 |

**ELASTIC VIBRATION COMPENSATORS**

| TYPE | DN |
|---|---|
| CE-50 | DN50 PN16 |
| CE-65 | DN65 PN16 |
| CE-80 | DN80 PN16 |
| CE-100 | DN100 PN16 |
| CE-125 | DN125 PN16 |
| CE-150 | DN150 PN16 |
| CE-200 | DN200 PN16 |
| CE-250 | DN250 PN16 |
| CE-300 | DN300 PN16 |
| CE-350 | DN350 PN16 |
| CE-400 | DN400 PN16 |

In presence of diesel motorpump is recommended to install on suction an elastic anti-vibration compensator to dampen the vibrations (in the delivery of the pump is already present). By inserting a compensator between two manifolds you can connect each two fire fighting modules.

# EJ, DJ

calpeda

**Accessories**

**INTERCEPTION BUTTERFLY VALVES “LUG” TYPE**

| TYPE | DN |
|---|---|
| LUG-50 | DN50 |
| LUG-65 | DN65 |
| LUG-80 | DN80 |
| LUG-100 | DN100 |
| LUG-125 | DN125 |
| LUG-150 | DN150 |
| LUG-200 | DN200 |
| LUG-250 | DN250 |
| LUG-300 | DN300 |
| LUG-350 | DN350 |
| LUG-400 | DN400 |

Interception butterfly valve LUG type, with threaded ears, complete with operating lever up to DN100 and hand-wheel for larger diameters

**KIT FLOWMETER**

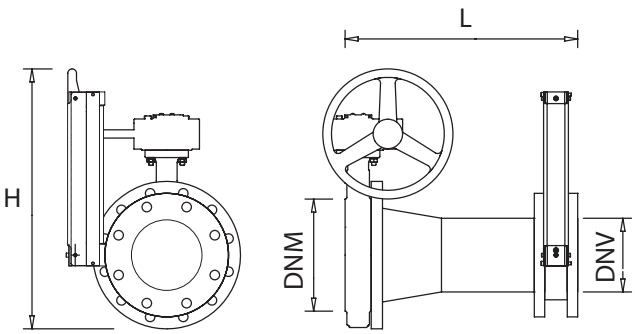


| TYPE | Flowmeter | Full scale | Connections | | L | H |
|---|---|---|---|---|---|---|
| | | (m3/h) | DNM | DNV | (mm) | (mm) |
| KM-65-40 | T40 | 55 | DN65 | DN40 | 412 | 452 |
| KM-65-50 | T50 | 90 | DN65 | DN50 | 465 | 452 |
| KM-80-65 | T65 | 140 | DN80 | DN65 | 540 | 460 |
| KM-100-80 | T80 | 200 | DN100 | DN80 | 635 | 470 |
| KM-125-100 | T100 | 280 | DN125 | DN100 | 770 | 485 |
| KM-150-125 | T125 | 480 | DN150 | DN125 | 910 | 550 |
| KM-200-150 | T150 | 600 | DN200 | DN150 | 1045 | 600 |
| KM-250-200 | T200 | 1000 | DN250 | DN200 | 1335 | 670 |
| KM-300-250 | T250 | 1600 | DN300 | DN250 | 1630 | 730 |

Connection kit between the fire fighting delivery manifold and the flow meter, composed of: interception valve, steel galvanized socket with adequate length and flowmeter. In the case of a flanged connection, the kit also includes the counter-flange to be installed after the flowmeter, along with two black rubber gaskets and bolts for securing the flowmeter. Please note that an additional shut-off valve is required after the flowmeter to regulate the water flow.

**SELF-POWERED REMOTE ACOUSTIC/LUMINOUS ALARMS**

These equipments permit monitoring and remote signaling of fire alarms related to the fire fighting booster set, in according to the EN12845 standard.

Type RA 12845 (no. 4 alarm input “Level A” and no. 12 alarm inputs “level B”)

- Features: Electronic control panel for alarm signalling
- Input voltage 1 ~ 50/60Hz 230V±10%
- Transformer 230 V/24 V for auxiliary circuit
- Nr.4 very low voltage input from free NC contact for alarm fire “level A”
- (at the opening of the NC contact the red flashing light and the buzzer activate)
- Nr.12 very low voltage input from free NC contact for alarm breakdown “level B”
- (when opening the NC contact the yellow flashing light and the buzzer activate)
- Green light for power on
- Red light for “alarm”
- Pushbutton “test” for temporary activation of the beacon
- Pushbutton “reset” for manual restoration of the alarm
- Pushbutton “beacon activation” for the activation of the acoustic alarm
- Pushbutton “beacon exclusion” for the exclusion of the acoustic alarm
- Internal selector for selecting the alarm restoration mode (automatic-manual)
- Internal selector for activation of the timer for automatic switch-off of the beacon
- Trimmer for automatic switch-off time delay selection (from 25” to 120”)
- Alarm beacon 90dB 12Vcc
- Sealed internal battery for back-up 12Vcc 1,2Ah
- Auxiliary protection fuse
- Battery protection fuse
- General alarm output with exchangeable contact (max 5A 250V AC1)
- Red flashing light 12Vcc; Yellow flashing light 12Vcc
- Box in thermoplastic material
- Output with cable holder
- Protection IP55;

# QM, QT

# Control panels

# QM, QT

calpeda®

## QM Control panel for 1 pump with single-phase motor, direct starting

### PANELS FOR SUBMERGED AND SUBMERSIBLE PUMPS

#### Construction

Control panel with ON-OFF switch and capacitor, for 1 pump with single-phase motor without built-in capacitor.

#### Technical data

Mains single-phase 230V ±10% 50/60 Hz (other voltages on request).
- Ambient temperature from -5 °C to +40 °C.
- Protection IP 44.

#### Components

Enclosure in thermoplastic material
ON-OFF switch with lamp
Capacitor
Terminal board
Cable glands

| Code | Pump type | Capacitor | Motor 230V - 1~ | Dimensions |
|---|---|---|---|---|
| | | 450Vc | kW | HxBxP mm |
| 44017940000 | QM 6,3 | 6,3 µF | 0,3 | 200x75x76 |
| 44017950000 | QM 20 | 20 µF | 0,55 - 0,75 | 200x75x76 |
| 44017960000 | QM 25 | 25 µF | 0,9 -1,1 | 200x75x76 |
| 44017990000 | QM 30 | 30 µF | 0,9 -1,1 | 200x75x76 |

## QM Control panels with circuit breaker for 1 single-phase pump

### PANELS FOR SUBMERGED AND SUBMERSIBLE PUMPS

#### Construction

Control panel with ON-OFF switch and capacitor, for 1 pump with single-phase motor without built-in capacitor.

#### Technical data

Mains single-phase 230V ±10% 50/60 Hz (other voltages on request).
- Ambient temperature from -5 °C to +40 °C.
- Protection IP 44.

#### Components

Enclosure in thermoplastic material
ON-OFF switch with lamp
Thermal device
Capacitor
Terminal board
Cable glands

| Code | Pump type | Protection | Capacitor | Motor 230V - 1~ | Dimensions |
|---|---|---|---|---|---|
| | | max A | 450Vc | kW | HxBxP mm |
| 44017950004 | QM 4-16 | 4 | 16 µF | 0,37 | 200x75x76 |
| 44017950007 | QM 5-20 | 5 | 20 µF | 0,55 | 200x75x76 |
| 44017960004 | QM 5-25 | 5 | 25 µF | 0,55 | 200x75x76 |
| 44017950012 | QM 6-20 | 6 | 20 µF | 0,75 | 200x75x76 |
| 44017960009 | QM 7-25 | 7 | 25 µF | 0,9 | 200x75x76 |
| 44017990001 | QM 7-30 | 7 | 30 µF | 0,75 | 200x75x76 |
| 44017960007 | QM 8-25 | 8 | 25 µF | 1,1 | 200x75x76 |
| 44017990004 | QM 8-30 | 8 | 30 µF | 1,1 | 200x75x76 |
| 44018000001 | QM 10-40 | 10 | 40 µF | 1,1 | 200x75x76 |
| 44018000000 | QM 12-35 | 12 | 35 µF | 1,5 | 200x75x76 |

# QM, QT

## M COMP Control panel for 1 pump with single-phase motor, direct starting

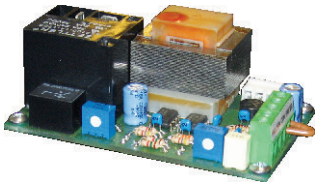

### PANELS FOR SUBMERGED AND SUBMERSIBLE PUMPS

### Construction

Control panel with ON-OFF switch and capacitor for 1 pump with single-phase motor.
Suitable for use with LVBT board for level control.
Protection is provided by means of a main bipolar switch with a phase protected against overload by means of a thermal element.

### Technical data

Mains single-phase 230V ±10% 50/60 Hz (other voltages on request).
- Ambient temperature from -5 °C to +40 °C.
Protection IP 44.
- Control through pressure switch (pressure booster set).
- Control through float switch (for filling a tank).

### Components

Enclosure in thermoplastic material
ON-OFF switch with pilot lamp with thermal protector
Capacitor
Terminal board
Terminals for LVBT board for level control.
Cable glands

### On request

LVBT board for level control

| Code | Pump type | Protezione | Capacitor | Motor 230V - 1~ | Dimensions |
|---|---|---|---|---|---|
| | | max A | 450Vc | kW | HxBxP mm |
| 44020000000 | M COMP 4-16 | 4,5 | 16 µF | 0,37 | 220x210x110 |
| 44020001000 | M COMP 4-20 | 4,5 | 20 µF | 0,55 | 220x210x110 |
| 44020010000 | M COMP 5-20 | 5 | 20 µF | 0,55 | 220x210x110 |
| 44020011000 | M COMP 5-25 | 5 | 25 µF | 0,55 | 220x210x110 |
| 44020021000 | M COMP 6-20 | 6 | 20 µF | 0,75 | 220x210x110 |
| 44020023000 | M COMP 6-35 | 6 | 35 µF | 0,75 | 220x210x110 |
| 44020031000 | M COMP 7-25 | 7 | 25 µF | 0,9 | 220x210x110 |
| 44020032000 | M COMP 7-30 | 7 | 30 µF | 0,9 | 220x210x110 |
| 44020040000 | M COMP 8-25 | 8 | 25 µF | 1,1 | 220x210x110 |
| 44020041000 | M COMP 8-30 | 8 | 30 µF | 1,1 | 220x210x110 |
| 44020052000 | M COMP 10-35 | 10 | 35 µF | 1,1 | 220x210x110 |
| 44020053000 | M COMP 10-40 | 10 | 40 µF | 1,1 | 220x210x110 |
| 44020060000 | M COMP 12-35 | 12 | 35 µF | 1,5 | 220x210x110 |
| 44020062000 | M COMP 12-50 | 12 | 50 µF | 1,5 | 220x210x110 |
| 44020063000 | M COMP 12-60 | 12 | 60 µF | 1,5 | 220x210x110 |
| 44020081000 | M COMP 16-70 | 16 | 70 µF | 2,2 | 220x210x110 |

# QM, QT

calpeda

## PFC-M Control panel for 1 submersible pump with single-phase motor, PF control

### PANELS FOR SUBMERGED PUMPS

### Construction

Control panel for controlling one submersible pump with single-phase motor.
Electronic control of the operation and dryrunning protection through the power factor (PF) control.
The installation of level probes into the well is not required.
It stops the pump in case of lack of air cushion in the pressure vessel (patented system).
Displayed operating data and alarms available in four languages.

### Technical data

Mains single-phase 230V ±10% 50/60 Hz.
- Max output current: 18 A.
- Ambient temperature from -5 °C to +40 °C.
- Relative humidity: from 20% to 90% without condensation
- Protection IP 44.
- Control through pressure switch (pressure booster set).
- Control through float switch (for filling a tank).
- Alarm output signal.

Constructed in accordance with IEC/EN 60439-1.

### Setting

- Min – Max voltage range.
- Motor rated current.
- Power factor (PF) value for dry-running protection.
- Up to four programmable restarts in case of no water condition.

### Alarms (with pump stop)

No electrical supply.
- Undervoltage and overvoltage.
- Motor overload.
- No water.
- No air cushion in the pressure vessel.

### Components

Enclosure in thermoplastic material
Capacitor
Terminal board
- Display : 2x16 characters.
- 6 button key board.
- In/Out Cable glands.

### On request

- RA 100 control panel for remote alarm.

| Code | Pump type | Setting | Capacitor | Motor 230V - 1~ | Dimensions |
|---|---|---|---|---|---|
| | | A | 450Vc | kW | HxBxP mm |
| 44021000000 | PFC-M 18-16 | 1 - 18 | 16 µF | 0,37 | 220x210x110 |
| 44021060000 | PFC-M 18-20 | 1 - 18 | 20 µF | 0,55 | 220x210x110 |
| 44021010000 | PFC-M 18-25 | 1 - 18 | 25 µF | 0,55 | 220x210x110 |
| 44021020000 | PFC-M 18-30 | 1 - 18 | 30 µF | 0,75 | 220x210x110 |
| 44021070000 | PFC-M 18-35 | 1 - 18 | 35 µF | 0,75 | 220x210x110 |
| 44021030000 | PFC-M 18-40 | 1 - 18 | 40 µF | 1,1 | 220x210x110 |
| 44021040000 | PFC-M 18-50 | 1 - 18 | 50 µF | 1,5 | 220x210x110 |
| 44021090000 | PFC-M 18-60 | 1 - 18 | 60 µF | 1,5 | 220x210x110 |
| 44021050000 | PFC-M 18-70 | 1 - 18 | 70 µF | 2,2 | 220x210x110 |

# QM, QT

**QTL/A 1 D** **Control panel for 1 pump with three-phase motor, direct starting**

## PANELS FOR SURFACE, SUBMERGED AND SUBMERSIBLE PUMPS

### Construction

Control panel for 1 pump with three-phase motor, direct starting for pressure booster sets and submersible drainage pumps.
Arranged for the capacitor internal connection (for pumps without builtin capacitor).

For pressure booster sets:
with a patented working time-measuring system that stops the pump in case of lack of air cushion in the pressure vessel.
- dry-running protection with float switch or level control probes.

For submersible drainage pumps:
- automatic operating test of the pump every set hours of inactivity (with pump in the automatic operating mode).

- Pump control with signals coming from:
- 2 float switches: one for starting-up and stopping pump, one for the alarm maximum level (optional).
- 3 float switches: one for starting-up pump, one for stopping the pump and one for the alarm maximum level (optional).
Pump operation controlled by an electronic card type MPS 3000 with microprocessor which allows three different modes of operation of the pump: standard, emergency and timed.

### Technical data

Power supply 400V 3~ ±10% 50/60 Hz (other voltages on request).
- Ambient temperature from -5 °C to +40 °C.
- Protection IP 44.

### Components

Thermoplastic case (metallic for 7,5-9,2-11kW).
Line disconnector with door lock.
- Fuses for power line. - Fuses for auxiliary circuit.
Auxiliary circuit fuses
Starting contactor and thermal relay (for 7,5-9,2-11kW).
- Electronic board type MPS 3000 with microprocessor.
- Terminals for pressure trasducer / level probes.
- Connection terminals for thermal protector.
- Connection terminals for the RA 100 - RA 100A type.
- Terminals for pressure switch connection.
- Terminals for float switch connection against dry-running.
Terminals for remote signals
- Cable glands.

### On request

Volt free contact control panel Q-MSP 9M
RA 100 - RA 100A control panel for remote alarm.

| Code | Pump type | Setting | Motor 400V - 3~ | Dimensions |
|---|---|---|---|---|
| | | A | kW | HxBxP mm |
| 14054470000 | QTL/A 1 D 12A-FA | 1 - 12 | 0,25 - 5,5 | 250x205x105 |
| 14054480000 | QTL/A 1 D 7,5 FT | 13 - 18 | 7,5 | 400x300x160 |
| 14054490000 | QTL/A 1 D 9,2 FT | 17 - 23 | 9,2 | 400x300x160 |
| 14054500000 | QTL/A 1 D 11 FT | 20 - 25 | 11 | 400x300x160 |

# QM, QT

calpeda®

## T COMP Control panel for 1 submersible pump with three-phase motor

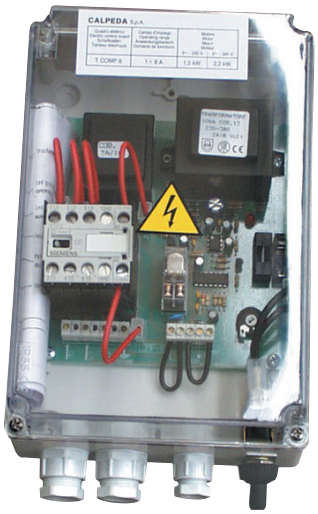

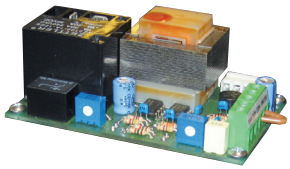

### PANELS FOR SUBMERGED PUMPS

### Construction

Control panel and protection for 1 pump with three-phase motor.
Arranged for the LVBT level control internal connection against dry running (T COMP8 model has the level control as a standard).
Control pumps with pressure switch and float-type switch.

### Technical data

Mains 230V or 400V ±10% 50/60 Hz (other voltages on request).
- Ambient temperature from -5 °C to +40 °C.
Protection IP 44.

### Components

Enclosure in thermoplastic material
ON-OFF control switch
- Fuse holder - Contactor - Thermal relay
Fuses for change of voltage: 230 V or 400 V
Transformer
Terminals for pressure switch or float switch connection
Terminals for LVBT board (for T COMP 10,12,16,20 models)
- Green LED indicator: voltage ON - Red LED indicator: thermic block
Cable glands

### On request

LVBT board for level control (for T COMP 10,12,16,20 models)

| Code | Pump type | Protection | Motor 230V - 3~ | Motor 400V - 3~ | Dimensions |
|---|---|---|---|---|---|
| | | A | kW | kW | HxBxP mm |
| 14013130000 | T COMP 8 | 1 ÷ 8 | 0,37 ÷ 1,5 | 0,5 ÷ 2,2 | 170x145x85 |
| 14013480000 | T COMP 10 | 7 ÷ 10 | --- | 3 ÷ 3,7 | 230x180x155 |
| 14024250000 | T COMP 12 | 9 ÷ 12 | 2,2 | 4 | 230x180x155 |
| 14013560000 | T COMP 16 | 11 ÷ 16 | 3 | 5,5 | 230x180x155 |
| 14013490000 | T COMP 20 | 14 ÷ 20 | 3,7 - 4 | 7,5 | 230x180x155 |

# QM, QT

**PFC-T Power Factor Control** **Control panel for 1 submersible pump with three-phase motor, PF control**

## PANELS FOR SUBMERGED PUMPS

### Construction

Control panel for controlling 1 submersible pump with three-phase motor.
Electronic control of the operation and dry-running protection through the power factor (PF) control.
The installation of level probes into the well is not required.
It stops the pump in case of lack of air cushion in the pressure vessel (patented system).
Displayed operating data and alarms available in four languages.

### Technical data

Mains three-phase 400V - 3 ~ ±10% 50/60 Hz
Output current: 11 A - 16 A
Ambient temperature from -5 °C to +40 °C.
- Relative humidity: from 20% to 90% without condensation
- Protection IP 55.
- Control through pressure switch (pressure booster set)
- Control through float switch (for filling a tank)
- Alarm output signal

Constructed in accordance with IEC/EN 60439-1.

### Setting

Min – Max voltage range
- Motor rated current
- Power factor (PF) value for dry-running protection
- Up to four programmable restarts in case of no water condition

### Alarms (with pump stop)

Phase failure
- Wrong phase sequence
- Undervoltage and overvoltage
- Motor overload
- No water
- No air cushion in the pressure vessel

### Components

Thermoplastic case.
Terminal board
- Display : 2x16 characters.
- 6 button key board.
- In/Out Cable glands.

### On request

- RA 100 control panel for remote alarm.

| Code | Pump type | Setting | Motor 400V 50Hz - 3~ | Dimensions | kg |
|---|---|---|---|---|---|
| | | A | kW | HxBxP mm | |
| 14058390000 | PFC-T 16/A | 1 - 16 | 0,37 - 5,5 | 250x205x105 | 1,7 |

# QM, QT

**QTL/A 1 D** **Control panel for 1 pump with three-phase motor, direct starting**

## PANELS FOR SURFACE, SUBMERGED AND SUBMERSIBLE PUMPS

### Construction

Control panel for 1 pump with three-phase motor, direct starting for pressure booster sets and submersible drainage pumps.
Arranged for the capacitor internal connection (for pumps without builtin capacitor).

For pressure booster sets:
with a patented working time-measuring system that stops the pump in case of lack of air cushion in the pressure vessel.
- dry-running protection with float switch or level control probes.

For submersible drainage pumps:
- automatic operating test of the pump every set hours of inactivity (with pump in the automatic operating mode).

- Pump control with signals coming from:
- 2 float switches: one for starting-up and stopping pump, one for the alarm maximum level (optional).
- 3 float switches: one for starting-up pump, one for stopping the pump and one for the alarm maximum level (optional).
Pump operation controlled by an electronic card type MPS 3000 with microprocessor which allows three different modes of operation of the pump: standard, emergency and timed.

### Technical data

Power supply 400V 3~ ±10% 50/60 Hz (other voltages on request).
- Ambient temperature from -5 °C to +40 °C.
- Protection IP 44.

### Components

Thermoplastic case (metallic for 7,5-9,2-11kW).
Line disconnector with door lock.
- Fuses for power line. - Fuses for auxiliary circuit.
Auxiliary circuit fuses
Starting contactor and thermal relay (for 7,5-9,2-11kW).
- Electronic board type MPS 3000 with microprocessor.
- Terminals for pressure trasducer / level probes.
- Connection terminals for thermal protector.
- Connection terminals for the RA 100 - RA 100A type.
- Terminals for pressure switch connection.
- Terminals for float switch connection against dry-running.
Terminals for remote signals
- Cable glands.

### On request

Volt free contact control panel Q-MSP 9M
RA 100 - RA 100A control panel for remote alarm.

| Code | Pump type | Setting | Motor 400V - 3~ | Dimensions |
|---|---|---|---|---|
| | | A | kW | HxBxP mm |
| 14054470000 | QTL/A 1 D 12A-FA | 1 - 12 | 0,25 - 5,5 | 250x205x105 |
| 14054480000 | QTL/A 1 D 7,5 FT | 13 - 18 | 7,5 | 400x300x160 |
| 14054490000 | QTL/A 1 D 9,2 FT | 17 - 23 | 9,2 | 400x300x160 |
| 14054500000 | QTL/A 1 D 11 FT | 20 - 25 | 11 | 400x300x160 |

# QM, QT

**QTL 1 D FTE** **Control panel for 1 pump with three-phase motor, direct starting**

## PANELS FOR SURFACE AND SUBMERGED PUMPS

### Construction

Electromechanical control panel for 1 pump with three-phase motor, direct starting.
Operating signals by E 1000 led card.
Dry-running protection with float switch.

### Technical data

Mains 400V 3 ~ ±10% 50/60 Hz (other voltages on request).
- Ambient temperature from -5 °C to +40 °C.
- Protection IP 44.

### Components

Metal case.
Line disconnector with door lock.
Fuses for power line. - Fuses for auxiliary circuit.
Auxiliary circuit fuses
Starting contactor
Thermal relay
Transformer.
E 1000 led card
Terminals for connection pump operating signal
Terminals for float switch connection against dry-running
Cable glands.

### On request

RLE level control for probes against dry running
- RLE level control for pump operating probes.
Voltmeter
Ammeter

| Code | Pump type | Motor 400V - 3~ | Setting | Dimensions |
|---|---|---|---|---|
| | | kW | A | HxBxP mm |
| 14029820000 | QTL 1 D 4 FTE | 4 | 6,3 - 10 | 400x300x160 |
| 14058920000 | QTL 1 D 5,5 FTE | 5,5 | 9 - 12 | 400x300x160 |
| 14058930000 | QTL 1 D 7,5 FTE | 7,5 | 13 - 18 | 400x300x160 |
| 14050250000 | QTL 1 D 9,2 FTE | 9,2 | 17 - 23 | 400x300x160 |
| 14037630000 | QTL 1 D 11 FTE | 11 | 20 - 25 | 400x300x160 |
| 14058940000 | QTL 1 D 15 FTE | 15 | 24 - 32 | 500x350x200 |
| 14029220000 | QTL 1 D 18,5 FTE | 18,5 | 32 - 38 | 500x350x200 |
| 14058950000 | QTL 1 D 22 FTE | 22 | 35 - 50 | 500x350x200 |
| 14058960000 | QTL 1 D 30 FTE | 30 | 46 - 65 | 500x350x200 |

# QM, QT

**QTL/A 1 ST FT** **Control panel for 1 pump with three-phase motor, Y/Δ starting**

## PANELS FOR SURFACE AND SUBMERGED PUMPS

### Construction

Control panel for 1 pump with three-phase motor, Y/Δ starting for pressure booster sets, with working time-measuring system that stops the pump in case of lack of air cushion in the pressure vessel.

Pump operation controlled by an electronic card type MPS 3000 with microprocessor with different pump operating modes.

Dry-running protection with float switch or level control probes.

### Technical data

Mains 400V 3 ~ ±10% 50/60 Hz (other voltages on request).
- Ambient temperature from -5 °C to +40 °C.
- Protection IP 44.

### Components

Metal case.
Line disconnector with door lock.
Fuses for power line. - Fuses for auxiliary circuit.
Auxiliary circuit fuses
Starting contactor
Thermal relay
Transformer
Electronic board MPS 3000 with microprocessor.
Terminals for pressure trasducer / level probes.
Connection terminals for thermal protector.
Connection terminals for the RA 100 - RA 100A type.
Terminals for motor connection.
Terminals for connection pressure switch of pump operating.
Terminals for float switch connection against dry-running.
Terminals for remote signals
Cable glands

### On request

RA 100 - RA 100A control panel for remote alarm.
Voltmeter
Ammeter

| Code | Pump type | Motor 400V - 3~ | Setting | Dimensions |
|---|---|---|---|---|
| | | kW | A | HxBxP mm |
| 14054510000 | QTL/A 1 ST 5,5 FT | 5,5 | 11 - 15 | 600x400x200 |
| 14054520000 | QTL/A 1 ST 7,5 FT | 7,5 | 12 - 17 | 600x400x200 |
| 14054530000 | QTL/A 1 ST 11 FT | 9,2 - 11 | 16 - 24 | 600x400x200 |
| 14054540000 | QTL/A 1 ST 15 FT | 15 | 23 - 31 | 600x400x200 |
| 14054550000 | QTL/A 1 ST 18,5 FT | 18,5 | 30 - 39 | 600x400x200 |
| 14054560000 | QTL/A 1 ST 22 FT | 22 | 35 - 43 | 700x500x200 |
| 14054570000 | QTL/A 1 ST 30B FT | 30 | 42 - 55 | 700x500x200 |
| 14054580000 | QTL/A 1 ST 30A FT | 30 | 55 - 65 | 700x500x200 |
| 14054590000 | QTL/A 1 ST 37 FT | 37 | 61 - 84 | 800x600x250 |
| 14054600000 | QTL/A 1 ST 45 FT | 45 | 80 - 105 | 800x600x250 |

# QM, QT

calpeda

## QTL/A 1 ST FT-RH Control panel for 1 submersible drainage pump with three-phase motor, Y/Δ starting

### PANELS FOR SUBMERSIBLE PUMPS

### Construction

Control panel with protection for 1 submersible drainage pump with three-phase motor, Y/Δ starting.

Operation managed by the MPS 3000 electronic circuit board that has the following functions:
- automatic operating test of the pump every set hours of inactivity (with pump in the automatic operating mode).

- Pump control with signals coming from:
2 float switches: for starting-up and stopping pump, for the alarm (maximum level is optional).
- 3 float switches: for starting-up pump, for stopping the pump and for the alarm (maximum level is optional).

### Technical data

Mains 400V 3 ~ ±10% 50/60 Hz (other voltages on request).
- Ambient temperature from -5 °C to +40 °C.
- Protection IP 44.

### Components

Metal case.
Line disconnector with door lock.
- Fuses for power line. - Fuses for auxiliary circuit.
Auxiliary circuit fuses
Starting contactor
Thermal relay
Transformer
Electronic board MPS 3000 with microprocessor.
Terminals for pressure trasducer / level probes.
Connection terminals for thermal protector.
Connection terminals for the RA 100 - RA 100A type.
Connection terminals for float switches.
Terminals for motor connection.
Terminals for connection pressure switch of pump operating.
Terminals for float switch connection against dry-running.
Remote signal terminals and cable glands

### On request

Volt free contact control panel Q-MSP 9M
RA 100 - RA 100A control panel for remote alarm.
Voltmeter
Ammeter

| Code | Pump type | Motor 400V - 3~ | Setting | Dimensions |
|---|---|---|---|---|
| | | kW | A | HxBxP mm |
| 14054610000 | QTL/A 1 ST 4 FT-RH | 4 | 7 - 11 | 600x400x200 |
| 14054620000 | QTL/A 1 ST 5,5 FT-RH | 5,5 | 11 - 15 | 600x400x200 |
| 14054630000 | QTL/A 1 ST 7,5 FT-RH | 7,5 | 12 - 17 | 600x400x200 |
| 14054640000 | QTL/A 1 ST 11 FT-RH | 9,2 - 11 | 16 - 24 | 600x400x200 |
| 14054650000 | QTL/A 1 ST 15 FT-RH | 15 | 23 - 31 | 600x400x200 |
| 14054660000 | QTL/A 1 ST 18,5 FT-RH | 18,5 | 30 - 39 | 600x400x200 |
| 14054670000 | QTL/A 1 ST 22 FT-RH | 22 | 35 - 43 | 700x500x250 |
| 14054680000 | QTL/A 1 ST 30B FT-RH | 30 | 42 - 55 | 700x500x250 |
| 14054690000 | QTL/A 1 ST 30A FT-RH | 30 | 55 - 65 | 700x500x250 |
| 14054700000 | QTL/A 1 ST 37 FT-RH | 37 | 61 - 84 | 800x600x250 |
| 14054710000 | QTL/A 1 ST 45 FT-RH | 45 | 80 - 105 | 800x600x250 |
| 14054720000 | QTL/A 1 ST 55 FT-RH | 55 | 100 - 125 | 800x600x250 |
| 14054730000 | QTL/A 1 ST 75 FT-RH | 75 | 120 - 150 | 900x600x300 |
| 14054740000 | QTL/A 1 ST 92 FT-RH | 92 | 155 - 255 | 1100x700x250 |

# QM, QT

**QTL 1 ST FTE** **Control panel for 1 pump with three-phase motor, Y/Δ starting**

## PANELS FOR SURFACE AND SUBMERGED PUMPS

### Construction

Electromechanical control panel for 1 pump with three-phase motor, Y/Δ starting.
Operating signals by E 1000 led card.
Dry-running protection with float switch.

### Technical data

Mains 400V 3 ~ ±10% 50/60 Hz (other voltages on request).
- Ambient temperature from -5 °C to +40 °C.
- Protection IP 44.

### Components

Metal case.
Line disconnector with door lock.
- Fuses for power line. - Fuses for auxiliary circuit.
Contactors.
Starting contactors.
Thermal relay
Y/Δ timer
Transformer.
E 1000 led board.
Terminals for motor connection.
Terminals for connection of pump operating signal.
- Terminals for float switch connection against dry-running.
- Cable glands.

### On request

RLE level control for probes against dry running.
- RLE level control for pump operating probes.
- Voltmeter.
- Ammeter.

| Code | Pump type | Motor 400V - 3~ | Setting | Dimensions |
|---|---|---|---|---|
| | | kW | A | HxBxP mm |
| 14058970000 | QTL 1 ST 5,5 FTE | 5,5 | 11 - 15 | 500x350x200 |
| 14058980000 | QTL 1 ST 7,5 FTE | 7,5 | 12 - 17 | 500x350x200 |
| 14029200000 | QTL 1 ST 11 FTE | 9,2 - 11 | 16 - 24 | 500x350x200 |
| 14058990000 | QTL 1 ST 15 FTE | 15 | 23 - 31 | 500x350x200 |
| 14029440000 | QTL 1 ST 18,5 FTE | 18,5 | 30 - 39 | 500x350x200 |
| 14031710000 | QTL 1 ST 22 FTE | 22 | 35 - 43 | 600x400x200 |
| 14059000000 | QTL 1 ST 30B FTE | 30 | 42 - 55 | 600x400x200 |
| 14048380000 | QTL 1 ST 30A FTE | 30 | 55 - 65 | 600x400x200 |
| 14048520000 | QTL 1 ST 37 FTE | 37 | 61 - 84 | 700x500x200 |
| 14047050000 | QTL 1 ST 45 FTE | 45 | 80 - 105 | 700x500x200 |
| 14059010000 | QTL 1 ST 55 FTE | 55 | 100 - 125 | 700x500x200 |
| 14059020000 | QTL 1 ST 75 FTE | 75 | 120 - 160 | 800x600x250 |
| 14059030000 | QTL 1 ST 92 FTE | 92 | 140 - 198 | 800x600x250 |
| 14059040000 | QTL 1 ST 110 FTE | 110 | 180 - 250 | 800x600x250 |

# QM, QT

**QTL 1 SS E** **Control panel for 1 pump with three-phase motor, start/stop with soft starter**

## PANELS FOR SURFACE AND SUBMERGED PUMPS

### Construction

Control panel for 1 pump with three-phase motor, start/stop with soft starter
Operating signals by E 1000 led card.
Application: control of submersible motor with great cable length and surface motors.
Dry-running protection with float switch.

### Technical data

Mains 400V 3 ~ ±10% 50/60 Hz (other voltages on request).
- Ambient temperature from -5 °C to +40 °C.
- Protection IP 44.

### Components

Metal case.
Line disconnector with door lock.
- Fuses for power line. - Fuses for auxiliary circuit.
Auxiliary circuit fuses
start/stop with soft starter
By pass contactors (built into the soft starter)
Transformer
E 1000 led card
Terminals for float switch or level probes connection for pump operating.
- Terminals for float switch or level probes connection against dry-running.
Cable glands

### On request

RLE level control for connection level probes of pump operating.
RLE level control for probes against dry running.
Voltmeter
Ammeter

| Code | Pump type | Motor 400V - 3~ | Max corrente erogata | Dimensions |
|---|---|---|---|---|
| | | kW | max A | HxBxP mm |
| 14059050000 | QTL 1 SS 7,5 E | 7,5 | 17 | 700x500x250 |
| 14053880000 | QTL 1 SS 15 E | 9,2 - 11 - 15 | 30 | 700x500x250 |
| 14028440000 | QTL 1 SS 22 E | 18,5 - 22 | 45 | 700x500x250 |
| 14059060000 | QTL 1 SS 30 E | 26 - 30 | 60 | 900x600x300 |
| 14045900000 | QTL 1 SS 37 E | 37 | 75 | 900x600x300 |
| 14059070000 | QTL 1 SS 45 E | 45 | 85 | 900x600x300 |
| 14059080000 | QTL 1 SS 55 E | 55 | 110 | 900x600x300 |
| 14059090000 | QTL 1 SS 63 E | 63 | 125 | 1100x700x300 |
| 14059100000 | QTL 1 SS 75 E | 75 | 142 | 1100x700x300 |
| 14059110000 | QTL 1 SS 90 E | 90 | 190 | 1200x800x400 |
| 14059120000 | QTL 1 SS 132 E | 110 - 132 | 245 | 1200x800x400 |

# QM, QT

**QTL 1 IS FTE** **Control panel for 1 pump with three-phase motor, with Stator Impedence starter**

## PANELS FOR SUBMERGED PUMPS

### Construction

Electromechanical control panel for 1 submersible pump with three-phase motor, with Stator Impedence starter.
Operating signals by E 1000 led card.
Application : submersible motors control with great cable length.

### Technical data

Mains 400V 3 ~ ±10% 50/60 Hz (other voltages on request).
- Ambient temperature from -5 °C to +40 °C.
- Protection IP 44.

### Components

Metal case
Door lock master switch
Fuses for power line
Auxiliary circuit fuses
Stator Impedence starter
By pass contactors
Transformer
E 1000 led card
RLE level control for connection level probes of pump control.
RLE level control for probes against dry running
Terminals for connection level probes or float switch for operating pump.
- Terminals for level probes or float switch connection against dry-running.
Cable glands

### On request

Voltmeter
Ammeter

| Code | Pump type | Motor 400V - 3~ | Setting |
|---|---|---|---|
| | | kW | max A |
| 14059130000 | QTL 1 IS 5,5 FTE-2RL | 5,5 | 11 - 15 |
| 14059140000 | QTL 1 IS 7,5 FTE-2RL | 7,5 | 12 - 17 |
| 14059150000 | QTL 1 IS 11 FTE-2RL | 9,2 - 11 | 16 - 24 |
| 14052700000 | QTL 1 IS 15 FTE-2RL | 15 | 23 - 31 |
| 14059160000 | QTL 1 IS 18,5 FTE-2RL | 18,5 | 30 - 39 |
| 14059170000 | QTL 1 IS 22 FTE-2RL | 22 | 35 - 43 |
| 14059180000 | QTL 1 IS 30 FTE-2RL | 30 | 42- 65 |
| 14059190000 | QTL 1 IS 37 FTE-2RL | 37 | 61 - 84 |
| 14059200000 | QTL 1 IS 45 FTE-2RL | 45 | 80 - 105 |
| 14059210000 | QTL 1 IS 55 FTE-2RL | 55 | 100 - 125 |
| 14059220000 | QTL 1 IS 75 FTE-2RL | 75 | 120 - 160 |
| 14059230000 | QTL 1 IS 92 FTE-2RL | 92 | 140 - 198 |
| 14059240000 | QTL 1 IS 110 FTE-2RL | 110 | 180 - 250 |

# QM, QT

**QML/A 2 D** **Control panel for 2 pumps with single-phase motor, direct starting**

## Control panels for booster sets with surface pumps and for booster sets with submersible pumps

### Construction

Control panel for 2 pumps with single-phase motor, direct starting for pressure booster sets and submersible drainage pumps. Arranged for the capacitor internal connection (for pumps without built-in capacitor).

For pressure booster sets:
with a patented working time-measuring system that stops the pump in case of lack of air cushion in the pressure vessel.
- dry-running protection with float switch or level control probes.

For submersible drainage pumps:
pump changing at every pump start.
- working pumps changing after 30 minutes of uninterrupted operation.
- automatic operating test of each individual pump every set hours of inactivity (with pumps in the automatic functioning mode).
- Pump control with signals coming from:
3 float switches: for starting-up and stopping pump 1, for starting-up and stopping pump 2, for the alarms (maximum level is optional).
- 4 float switches: for starting-up pump 1, for starting up pump 2, for stopping the pumps and for the alarms (maximum level is optional).
Pump operation controlled by an electronic card type MPS 3000 with microprocessor which allows three different modes of operation of the pump: standard, emergency and timed.

### Technical data

Power supply 230V ±10% 50/60 Hz (other voltages on request).
- Ambient temperature from -5 °C to +40 °C.
- Protection IP 44.

### Components

Thermoplastic case. - Door lock master switch.
Line disconnector with door lock.
- Fuses for power line. - Fuses for auxiliary circuit.
Auxiliary circuit fuses
- Electronic board type MPS 3000 with microprocessor.
- Terminals for pressure trasducer / level probes.
- Connection terminals for thermal protector.
- Connection terminals for the RA 100 - RA 100A type.
- Terminals for pressure switch connection.
- Terminals for float switch connection against dry-running.
Terminals for remote signals
- Cable glands.

### On request

Volt free contact control panel Q-MSP 13M.
RA 100 - RA 100A control panel for remote alarm.

| Code | Pump type | Motor 400V - 3~ | Setting | Dimensions |
|---|---|---|---|---|
| | | kW | max A | HxBxP mm |
| 14054750000 | QML/A 2 D 12A-FA | 0,25 - 1,5 | 1 - 12 | 310x235x125 |
| 24054750000 | QML/A 2 D 12A-FA 20 | 0,25 - 1,5 | 1 - 12 | 310x235x125 |
| 24054750001 | QML/A 2 D 12A-FA 25 | 0,25 - 1,5 | 1 - 12 | 310x235x125 |
| 24054750002 | QML/A 2 D 12A-FA 30-85 | 0,25 - 1,5 | 1 - 12 | 395x315x135 |
| 24054750003 | QML/A 2 D 12A-FA 35-85 | 0,25 - 1,5 | 1 - 12 | 395x315x135 |
| 14055750000 | QML/A 2 D 3 FT | 2,2 - 3 | 13 - 18 | 500x350x160 |

# QM, QT

**QTL/A 2 D** **Control panel for 2 pumps with three-phase motor, direct starting**

## Control panels for booster sets with surface pumps and for booster sets with submersible pumps

### Construction

Control panel for 2 pumps with single-phase motor, direct starting for pressure booster sets and submersible drainage pumps.
For pressure booster sets:
with a patented working time-measuring system that stops the pump in case of lack of air cushion in the pressure vessel.
- dry-running protection with float switch or level control probes.
For submersible drainage pumps:
pump changing at every pump start.
- working pumps changing after 30 minutes of uninterrupted operation.
- automatic operating test of each individual pump every set hours of inactivity (with pumps in the automatic functioning mode).
- Pump control with signals coming from:
3 float switches: for starting-up and stopping pump 1, for starting-up and stopping pump 2, for the alarms (maximum level is optional).
- 4 float switches: for starting-up pump 1, for starting up pump 2, for stopping the pumps and for the alarms (maximum level is optional).
Pump operation controlled by an electronic card type MPS 3000 with microprocessor which allows three different modes of operation of the pump: standard, emergency and timed.

### Technical data

Power supply 230V ±10% 50/60 Hz (other voltages on request).
- Ambient temperature from -5 °C to +40 °C.
- Protection IP 44.

### Components

Thermoplastic case. - Door lock master switch.
Line disconnector with door lock.
- Fuses for power line. - Fuses for auxiliary circuit.
Auxiliary circuit fuses
- Electronic board type MPS 3000 with microprocessor.
- Terminals for pressure trasducer / level probes.
- Connection terminals for thermal protector.
- Connection terminals for the RA 100 - RA 100A type.
Terminals for float switch or float switch connection against dry-running.
- Terminals for float switch connection against dry-running.
Terminals for remote signals
- Cable glands.

### On request

Volt free contact control panel Q-MSP 13M.
RA 100 - RA 100A control panel for remote alarm.

| Code | Pump type | Motor 400V - 3~ | Setting | Dimensions |
|---|---|---|---|---|
| | | kW | max A | HxBxP mm |
| 14054760000 | QTL/A 2 D 12A-FA | 0,25 - 5,5 | 1 - 12 | 310x235x125 |

# QM, QT

**QTL/A 2 ST FT** **Control panel for 2 pumps with three-phase motor, Y/Δ starting**

## PANELS FOR SURFACE PUMP ASSEMBLIES

### Construction

Control panel for 2 pumps with three-phase motor, Y/Δ starting for pressurisation systems, with system that detects the operating time of the pumps (patented) and stops them when the air cushion in the tank is reduced.

Pump operation cascade mode controlled by an electronic board type MPS 3000 with microprocessor which allows different operation modes:

Dry-running protection with float switch or level control probes.

### Technical data

Mains 400V ±10% 50 Hz (other voltages on request
- Ambient temperature from -5 °C to +40 °C.
- Protection IP 44.

### Components

Metal case
Line disconnector with door lock.
- Fuses for power line. - Fuses for auxiliary circuit.
Auxiliary circuit fuses
Starting contactors
Thermal relay.
- Y/Δ timers.
Transformer.
- Electronic board type MPS 3000 with microprocessor.
- Terminals for pressure trasducer / level probes.
- Connection terminals for thermal protector.
- Connection terminals for the RA 100 - RA 100A type.
Terminals for float switch or float switch connection against dry-running.
Terminals for float switch or float switch connection against dry-running.
Terminals for remote signals
- Cable glands.

### On request

Volt free contact control panel Q-MSP 13M.
RA 100 - RA 100A control panel for remote alarm.
Voltmeter
Ammeter

| Code | Pump type | Motor 400V - 3~ | Current | Dimensions |
|---|---|---|---|---|
| | | kW | max A | HxBxP mm |
| 14054770000 | QTL/A 2 ST 5,5 FT | 5,5 | 11 - 15 | 700x500x200 |
| 14054780000 | QTL/A 2 ST 7,5 FT | 7,5 | 12 - 17 | 700x500x200 |
| 14054790000 | QTL/A 2 ST 11 FT | 9,2 - 11 | 16 - 24 | 700x500x200 |
| 14054800000 | QTL/A 2 ST 15 FT | 15 | 23 - 31 | 700x500x200 |
| 14054810000 | QTL/A 2 ST 18,5 FT | 18,5 | 30 - 39 | 700x500x200 |
| 14054820000 | QTL/A 2 ST 22 FT | 22 | 35 - 43 | 900x600x250 |
| 14054830000 | QTL/A 2 ST 30B FT | 30 | 42 - 55 | 900x600x250 |
| 14054840000 | QTL/A 2 ST 30A FT | 30 | 55 - 65 | 900x600x250 |
| 14054850000 | QTL/A 2 ST 37 FT | 37 | 61 - 84 | 1100x700x250 |
| 14054860000 | QTL/A 2 ST 45 FT | 45 | 80 - 105 | 1100x700x250 |

# QM, QT

## QTL/A 2 ST .. FT-RH Electric control panel for 2 drainage pumps with three-phase motor, Y/Δ starting

### PANELS FOR SUBMERSIBLE PUMP ASSEMBLIES

### Construction

Control panel with protection for 2 submersible drainage pumps with threephase motor, Y/Δ starting.
Pump operation in cascade managed by MPs 3000 electronic control unit with microprocessor that allows for different operating modes:
pump changing at every pump start.
- working pumps changing after 30 minutes of uninterrupted operation.
- automatic operating test of each individual pump every set hours of inactivity (with pumps in the automatic functioning mode).

- Pump control with signals coming from:
3 float switches: for starting-up and stopping pump 1, for starting-up and stopping pump 2, for the alarms (maximum level is optional).
4 float switches: for starting-up pump 1, for starting up pump 2, for stopping the pumps and for the alarms (maximum level is optional).

### Technical data

Mains 400V ±10% 50/60 Hz (other voltages on request).
- Ambient temperature from -5 °C to +40 °C.
- Protection IP 44.

### Components

Metal case.
Line disconnector with door lock.
- Fuses for power line. - Fuses for auxiliary circuit.
Auxiliary circuit fuses
Starting contactors
Thermal relay.
- Y/Δ timers.
Transformer
Electronic board MPS 3000 with microprocessor.
Terminals for pressure trasducer / level probes.
Connection terminals for thermal protector
- Connection terminals for the RA 100 - RA 100A type.
Connection terminals for float switches.
- Connection terminals for thermal protectors.
Terminals for float switch or float switch connection against dry-running.
Terminals for remote signals
Cable glands

### On request

Volt free contact control panel Q-MSP 13M
RA 100 - RA 100A control panel for remote alarm.
Voltmeter
Ammeter

| Code | Pump type | Motor 400V - 3~ | Current | Dimensions |
|---|---|---|---|---|
| | | kW | A | HxBxP mm |
| 14054870000 | QTL/A 2 ST 4 FT-RH | 4 | 7 - 11 | 700x500x200 |
| 14054880000 | QTL/A 2 ST 5,5 FT-RH | 5,5 | 11 - 15 | 700x500x200 |
| 14054890000 | QTL/A 2 ST 7,5 FT-RH | 7,5 | 12 - 17 | 700x500x200 |
| 14054900000 | QTL/A 2 ST 11 FT-RH | 9,2 - 11 | 16 - 24 | 700x500x200 |
| 14054910000 | QTL/A 2 ST 15 FT-RH | 15 | 23 - 31 | 700x500x200 |
| 14054920000 | QTL/A 2 ST 18,5 FT-RH | 18,5 | 30 - 39 | 700x500x200 |
| 14054930000 | QTL/A 2 ST 22 FT-RH | 22 | 35 - 43 | 900x600x250 |
| 14054940000 | QTL/A 2 ST 30B FT-RH | 30 | 42 - 55 | 900x600x250 |
| 14054950000 | QTL/A 2 ST 30A FT-RH | 30 | 55 - 65 | 900x600x250 |
| 14054960000 | QTL/A 2 ST 37 FT-RH | 37 | 61 - 84 | 1100x700x250 |
| 14054970000 | QTL/A 2 ST 45 FT-RH | 45 | 80 - 105 | 1100x700x250 |
| 14054980000 | QTL/A 2 ST 55 FT-RH | 55 | 100 - 125 | 1200x800x300 |
| 14054990000 | QTL/A 2 ST 75 FT-RH | 75 | 120 - 150 | 1200x800x300 |
| 14055000000 | QTL/A 2 ST 92 FT-RH | 92 | 155 - 255 | 1400x800x400 |

# QM, QT

**QML/A 3 D** **Control panel for 3 pumps with single-phase motor, direct starting**

## Control panels for booster sets with surface pumps and for booster sets with submersible pumps

### Construction

Control panel for 3 pumps with single-phase motor, direct starting for pressurisation systems, with system that detects the operating time of the pumps (patented) and stops them when the air cushion in the tank is reduced. Pump operation cascade mode controlled by an electronic board type MPS 3000 with microprocessor which allows different operation modes.
Dry-running protection with float switch or level control probes.

### Technical data

Power supply 230V ±10% 50/60 Hz (other voltages on request).
- Ambient temperature from -5 °C to +40 °C.
- Protection IP 44.

### Components

Thermoplastic case. - Door lock master switch.
Line disconnector with door lock.
- Fuses for power line. - Fuses for auxiliary circuit.
Contactors.
Starting contactors.
Fuses for auxiliary circuit.
- Electronic board type MPS 3000 with microprocessor.
- Terminals for pressure trasducer / level probes.
- Connection terminals for thermal protector.
- Connection terminals for the RA 100 - RA 100A type.
- Terminals for pressure switch connection.
Terminals for float switch or float switch connection against dry-running.
Terminals for remote signals
- Cable glands.

### On request

Volt free contact control panel Q-MSP 13M.
RA 100 - RA 100A control panel for remote alarm.

| Code | Pump type | Motor 400V - 3~ | Setting | Dimensions |
|---|---|---|---|---|
| | | kW | max A | HxBxP mm |
| 14055010000 | QML/A 3 D 12A-FA | 0,25 - 1,5 | 1 - 12 | 395x315x135 |

# QM, QT

**QTL/A 3 D** **Control panel for 3 pumps with three-phase motor, direct starting**

## Control panels for booster sets with surface pumps and for booster sets with submersible pumps

### Construction

Control panel for 3 pumps with three-phase motor, direct starting, for pressure booster sets and submersible drainage pumps.
For pressure booster sets:
with a patented working time-measuring system that stops the pump in case of lack of air cushion in the pressure vessel.
- dry-running protection with float switch or level control probes.
For submersible drainage pumps:
pump changing at every pump start.
- working pumps changing after 30 minutes of uninterrupted operation.
- automatic operating test of each individual pump every set hours of inactivity (with pumps in the automatic functioning mode).
- Pump control with signals coming from:
4 float switches: for starting-up and stopping pump, for the alarm (maximum level is optional).
- 5 float switches: for starting-up pump, for stopping the pumps and for the alarm (maximum level is optional).

### Technical data

Power supply 400V ±10% 50/60 Hz (other voltages on request).
- Ambient temperature from -5 °C to +40 °C.
- Protection IP 44.

### Components

Thermoplastic case. - Door lock master switch.
Line disconnector with door lock.
- Fuses for power line. - Fuses for auxiliary circuit.
Contactors.
Starting contactors.
Fuses for auxiliary circuit.
- Electronic board type MPS 3000 with microprocessor.
- Terminals for pressure trasducer / level probes.
- Connection terminals for thermal protector.
- Connection terminals for the RA 100 - RA 100A type.
Terminals for float switch or float switch connection against dry-running.
- Terminals for float switch connection against dry-running.
Terminals for remote signals
- Cable glands.

### On request

Volt free contact control panel Q-MSP 13M.
RA 100 - RA 100A control panel for remote alarm.

| Code | Pump type | Motor 400V - 3~ | Setting | Dimensions |
|---|---|---|---|---|
| | | kW | max A | HxBxP mm |
| 14055020000 | QTL/A 3 D 12A-FA | 0,37 - 5,5 | 1 - 12 | 395x315x135 |

# QM, QT

**QTL/A 3 ST FT** **Control panel for 3 pumps with three-phase motor, Y/Δ starting**

## PANELS FOR SURFACE PUMP ASSEMBLIES

### Construction

Control panel for 3 pumps with three-phase motor, Y/Δ starting, for pressure booster sets, with working time-measuring system that stops the pump in case of lack of air cushion in the pressure vessel.
Pump operation cascade mode controlled by an electronic board type MPS 3000 with microprocessor which allows different operation modes.
Dry-running protection with float switch or level control probes.

### Technical data

Mains 400V 3 ~ ±10% 50/60 Hz (other voltages on request).
- Ambient temperature from -5 °C to +40 °C.
- Protection IP 44.

### Components

Metal case
Line disconnector with door lock.
- Fuses for power line. - Fuses for auxiliary circuit.
Contactors.
Starting contactors
Thermal relay.
- Y/Δ timers.
Transformer.
- Electronic board type MPS 3000 with microprocessor.
- Terminals for pressure trasducer / level probes.
- Connection terminals for thermal protector.
- Connection terminals for the RA 100 - RA 100A type.
Terminals for pumps connection.
Terminals for float switch or float switch connection against dry-running.
Terminals for float switch or float switch connection against dry-running.
Terminals for remote signals
- Cable glands.

### On request

Volt free contact control panel Q-MSP 13M.
RA 100 - RA 100A control panel for remote alarm.
Voltmeter
Ammeter

| Code | Pump type | Motor 400V - 3~ | Current | Dimensions |
|---|---|---|---|---|
| | | kW | max A | HxBxP mm |
| 14055030000 | QTL/A 3 ST 5,5 FT | 5,5 | 11 - 15 | 700x500x200 |
| 14055040000 | QTL/A 3 ST 7,5 FT | 7,5 | 12 - 17 | 700x500x200 |
| 14055050000 | QTL/A 3 ST 11 FT | 9,2 - 11 | 16 - 24 | 800x600x250 |
| 14055060000 | QTL/A 3 ST 15 FT | 15 | 23 - 31 | 800x600x250 |
| 14055070000 | QTL/A 3 ST 18,5 FT | 18,5 | 30 - 39 | 1000x600x250 |
| 14055080000 | QTL/A 3 ST 22 FT | 22 | 35 - 43 | 1100x700x250 |
| 14055090000 | QTL/A 3 ST 30B FT | 30 | 42 - 55 | 1200x800x300 |
| 14055100000 | QTL/A 3 ST 30A FT | 30 | 55 - 65 | 1200x800x300 |
| 14055110000 | QTL/A 3 ST 37 FT | 37 | 61 - 84 | 1400x800x400 |
| 14055120000 | QTL/A 3 ST 45 FT | 45 | 80 - 105 | 1400x800x400 |

# QM, QT

## QTL/A 3 ST .. FT-RH Electric control panel for 3 drainage pumps with three-phase motor, Y/Δ starting

### PANELS FOR SUBMERSIBLE PUMP ASSEMBLIES

### Construction

Control panel with protection for 3 submersible drainage pumps with threephase motor, Y/Δ starting.
Operation managed by the MPS 3000 electronic circuit board that incorporates the following functions:
pump changing at every pump start.
- working pumps changing after 30 minutes of uninterrupted operation.
- automatic operating test of each individual pump every set hours of inactivity (with pumps in the automatic functioning mode).
- Pump control with signals coming from:
4 float switches: for starting-up and stopping pump, for the alarm (maximum level is optional).
- 5 float switches: for starting-up pump, for stopping the pumps and for the alarm (maximum level is optional).

### Technical data

Mains 400V 3 ~ ±10% 50/60 Hz (other voltages on request).
- Ambient temperature from -5 °C to +40 °C.
- Protection IP 44.

### Components

Metal case.
Line disconnector with door lock.
- Fuses for power line. - Fuses for auxiliary circuit.
Auxiliary circuit fuses
Starting contactors
Thermal relay.
- Y/Δ timers.
Transformer
Electronic board MPS 3000 with microprocessor.
Terminals for pressure trasducer / level probes.
Connection terminals for thermal protector
- Connection terminals for the RA 100 - RA 100A type.
Connection terminals for float switches.
Terminals for pumps connection.
- Connection terminals for thermal protectors.
Terminals for float switch or float switch connection against dry-running.
Terminals for remote signals
Cable glands

### On request

Volt free contact control panel Q-MSP 13M
RA 100 - RA 100A control panel for remote alarm.
Voltmeter
Ammeter

| Code | Pump type | Motor 400V - 3~ | Current | Dimensions |
|---|---|---|---|---|
| | | kW | A | HxBxP mm |
| 14055130000 | QTL/A 3 ST 4 FT-RH | 4 | 7 - 11 | 700x500x200 |
| 14055140000 | QTL/A 3 ST 5,5 FT-RH | 5,5 | 11 - 15 | 700x500x200 |
| 14055150000 | QTL/A 3 ST 7,5 FT-RH | 7,5 | 12 - 17 | 700x500x200 |
| 14055160000 | QTL/A 3 ST 11 FT-RH | 9,2 - 11 | 16 - 24 | 800x600x250 |
| 14055170000 | QTL/A 3 ST 15 FT-RH | 15 | 23 - 31 | 800x600x250 |
| 14055180000 | QTL/A 3 ST 18,5 FT-RH | 18,5 | 30 - 39 | 1000x600x250 |
| 14055190000 | QTL/A 3 ST 22 FT-RH | 22 | 35 - 43 | 1100x700x250 |
| 14055200000 | QTL/A 3 ST 30B FT-RH | 30 | 42 - 55 | 1200x800x300 |
| 14055210000 | QTL/A 3 ST 30A FT-RH | 30 | 55 - 65 | 1200x800x300 |
| 14055220000 | QTL/A 3 ST 37 FT-RH | 37 | 61 - 84 | 1400x800x400 |
| 14055230000 | QTL/A 3 ST 45 FT-RH | 45 | 80 - 105 | 1400x800x400 |
| 14055240000 | QTL/A 3 ST 55 FT-RH | 55 | 100 - 125 | 1600x800x400 |
| 14055250000 | QTL/A 3 ST 75 FT-RH | 75 | 120 - 150 | 1600x1000x400 |
| 14055260000 | QTL/A 3 ST 92 FT-RH | 92 | 155 - 255 | 1600x1000x400 |

# QM, QT

**QML 1 VFT** **Control panel for 1 pump with variable speed three-phase motor**

## PANELS FOR SURFACE AND SUBMERGED PUMPS

### Construction

Single-phase mains supply control panel with frequency converter for 1 pump with three-phase 230V variable speed motor, for constant pressure booster sets. Arranged for SRL 3 level control application for probes connection against dry-running.
Pump operation controlled by an electronic board type MPS 4000 with microprocessor.

### Technical data

Mains single-phase 230V ±10% 50 Hz (other voltages on request).
- Ambient temperature from -5 °C to +40 °C.
- Protection IP 44.

### Components

Metal case.
Line disconnector with door lock.
- Fuses for power line. - Fuses for auxiliary circuit.
Fuses for auxiliary circuit.
Fuses for power line.
Inverter.
electronic board type MPS 4000 with microprocessor.
Interface for MPS 4000 electronic board.
- Ventilator for electric panel cooling.
- Terminals board. -
Terminal board
Terminals for remote signals
- Cable glands.

### On request

SRL3 level control for probes against dry running
Volt free contact module MSP 1M, control panel Q-MSP 9M.
- RA 100 control panel for remote alarm.

| Code | Pump type | Max corrente erogata | Motor 230V - 1~ | Dimensions |
|---|---|---|---|---|
| | | max A | kW | HxBxP mm |
| 14059250000 | QML 1 VFT 0,4 | 2,4 | 0,37 - 0,45 | 500x350x200 |
| 14059260000 | QML 1 VFT 0,75 | 4,2 | 0,55 - 0,75 | 500x350x200 |
| 14059270000 | QML 1 VFT 1,5 | 7,5 | 1,1 - 1,5 | 500x350x200 |
| 14050260000 | QML 1 VFT 2,2 | 10 | 2,2 | 500x350x200 |

# QM, QT

**QTL 1 VFT** **Control panel for 1 pump with variable speed three-phase motor**

## PANELS FOR SURFACE AND SUBMERGED PUMPS

### Construction

Control panel with frequency converter for 1 pump with three-phase variable speed motor, for constant pressure booster sets.Arranged for SRL 3 level control application for probes connection against dry-running.
Pump operation controlled by an electronic board type MPS 4000 with microprocessor.

### Technical data

Mains 400V 3 ~ ±10% 50/60 Hz (other voltages on request).
- Ambient temperature from -5 °C to +40 °C.
Protection IP 44.

### Components

Metal case
Door lock master switch
Fuses for power line
Fuses for auxiliary circuit.
Fuses for power line.
Inverter.
electronic board type MPS 4000 with microprocessor.
Interface for MPS 4000 electronic board.
- Ventilator for electric panel cooling.
Pressure transducer
Terminal board
Terminals for remote signals
Cable glands

### On request

SRL3 level control for probes against dry running
Volt free contact module MSP 1M, control panel Q-MSP 9M.
RA 100 control panel for remote alarm

| Code | Pump type | Max corrente erogata | Motor 400V - 3~ | Dimensions |
|---|---|---|---|---|
| | | max A | kW | HxBxP mm |
| 14046510000 | QTL 1 VFT 0,4 | 1,5 | 0,4 | 500x350x200 |
| 14046520000 | QTL 1 VFT 0,75 | 2,3 | 0,55 - 0,75 | 500x350x200 |
| 14046530000 | QTL 1 VFT 1,5 | 4,1 | 1,1 - 1,5 | 500x350x200 |
| 14046540000 | QTL 1 VFT 2,2 | 5,5 | 2,2 | 500x350x200 |
| 14046550000 | QTL 1 VFT 4 | 9,5 | 3 - 4 | 500x350x200 |
| 14046560000 | QTL 1 VFT 5,5 | 14,3 | 5,5 | 600x400x250 |
| 14046570000 | QTL 1 VFT 7,5 | 17 | 7,5 | 600x400x250 |
| 14046580000 | QTL 1 VFT 11 | 27,7 | 9,2 - 11 | 700x500x250 |
| 14046590000 | QTL 1 VFT 15 | 33 | 15 | 700x500x250 |
| 14046600000 | QTL 1 VFT 18,5 | 46,3 | 18,5 | 800x600x250 |
| 14046610000 | QTL 1 VFT 22 | 61,5 | 22 | 800x600x250 |
| 14046620000 | QTL 1 VFT 30 | 74,5 | 30 | 900x600x250 |
| 14046630000 | QTL 1 VFT 37 | 88 | 37 | 1100x700x300 |
| 14046640000 | QTL 1 VFT 45 | 106 | 45 | 1200x800x300 |
| 14046650000 | QTL 1 VFT 55 | 145 | 55 | 1200x800x300 |
| 14046660000 | QTL 1 VFT 75 | 173 | 75 | 1200x800x300 |

# QM, QT

**QML 2 VFT** **Control panel for 2 pumps with variable speed three-phase motor**

## PANELS FOR SURFACE PUMP ASSEMBLIES

### Construction

Single-phase mains supply control panel with frequency converter for 2 pumps with three-phase 230V variable speed motor, for constant pressure booster sets. Arranged for SRL 3 level control application for probes connection against dry-running.
Pump operation controlled by an electronic board type MPS 4000 with microprocessor.

### Technical data

Mains single-phase 230V ±10% 50 Hz (other voltages on request).
- Ambient temperature from -5 °C to +40 °C.
Protection IP 44.

### Components

Metal case
Door lock master switch
Fuses for power line
Fuses for auxiliary circuit.
Fuses for power line.
Inverter.
electronic board type MPS 4000 with microprocessor.
Interface for MPS 4000 electronic board.
- Ventilator for electric panel cooling.
Terminal board
Terminals for remote signals
Cable glands

### On request

SRL3 level control for probes against dry running
Volt free contact module MSP 1M, control panel Q-MSP 9M.
RA 100 control panel for remote alarm

| Code | Pump type | Max corrente erogata | Motor 230V - 3~ | Dimensions |
|---|---|---|---|---|
| | | max A | kW | HxBxP mm |
| 14059280000 | QML 2 VFT 0,45 | 2,4x2 | 0,37 - 0,45 | 600x400x200 |
| 14048320000 | QML 2 VFT 0,75 | 4,2x2 | 0,55 - 0,75 | 600x400x200 |
| 14047020000 | QML 2 VFT 1,5 | 7,5x2 | 1,1 - 1,5 | 600x400x200 |
| 14059290000 | QML 2 VFT 2,2 | 10x2 | 2,2 | 600x400x200 |

# QM, QT

**QTL 2 VFT** **Control panel for 2 pumps with variable speed three-phase motor**

## PANELS FOR SURFACE PUMP ASSEMBLIES

### Construction

Control panel with frequency converter for 2 pump with three-phase variable speed motor, for constant pressure booster sets. Arranged for SRL 3 level control application for probes connection against dry-running.
Pump operation controlled by an electronic board type MPS 4000 with microprocessor.

### Technical data

Mains 400V 3 ~ ±10% 50/60 Hz (other voltages on request).
- Ambient temperature from -5 °C to +40 °C.
Protection IP 44.

### Components

Metal case
Door lock master switch
Fuses for power line
Fuses for auxiliary circuit.
Fuses for power line.
Inverter.
electronic board type MPS 4000 with microprocessor.
Interface for MPS 4000 electronic board.
- Ventilator for electric panel cooling.
Terminal board
Terminals for remote signals
Cable glands

### On request

SRL3 level control for probes against dry running
Volt free contact module MSP 1M, control panel Q-MSP 9M.
RA 100 control panel for remote alarm

| Code | Pump type | Max corrente erogata | Motor 400V - 3~ | Dimensions |
|---|---|---|---|---|
| | | max A | kW | HxBxP mm |
| 14046670000 | QTL 2 VFT 0,45 | 1,5x2 | 0,37 - 0,45 | 600x400x250 |
| 14046680000 | QTL 2 VFT 0,75 | 2,3x2 | 0,55 - 0,75 | 600x400x250 |
| 14046690000 | QTL 2 VFT 1,5 | 4,1x2 | 1,1 - 1,5 | 600x400x250 |
| 14046700000 | QTL 2 VFT 2,2 | 5,5x2 | 2,2 | 600x400x250 |
| 14046710000 | QTL 2 VFT 4 | 9,5x2 | 3 - 4 | 600x400x250 |
| 14046720000 | QTL 2 VFT 5,5 | 14,3x2 | 5,5 | 700x500x250 |
| 14046730000 | QTL 2 VFT 7,5 | 17x2 | 7,5 | 700x500x250 |
| 14046740000 | QTL 2 VFT 11 | 27,7x2 | 9,2 - 11 | 900x600x250 |
| 14046750000 | QTL 2 VFT 15 | 33x2 | 15 | 900x600x250 |
| 14046760000 | QTL 2 VFT 18,5 | 46,3x2 | 18,5 | 1200x800x300 |
| 14046770000 | QTL 2 VFT 22 | 61,5x2 | 22 | 1200x800x300 |
| 14046780000 | QTL 2 VFT 30 | 74,5x2 | 30 | 1200x800x300 |
| 14046790000 | QTL 2 VFT 37 | 88x2 | 37 | 1600x1000x400 |
| 14046800000 | QTL 2 VFT 45 | 106x2 | 45 | 2100x1400x500 |
| 14046810000 | QTL 2 VFT 55 | 145x2 | 55 | 2100x1400x500 |
| 14046820000 | QTL 2 VFT 75 | 173x2 | 75 | 2100x1400x500 |

# QM, QT

**QML 3 VFT** **Control panel for 3 variable speeds pump with three-phase motor**

## PANELS FOR SURFACE PUMP ASSEMBLIES

### Construction

Single-phase mains supply control panel with frequency converter for 3 pumps with three-phase 230V variable speed motor, for constant pressure booster sets. Arranged for SRL 3 level control application for probes connection against dry-running.
Pump operation controlled by an electronic board type MPS 4000 with microprocessor.

### Technical data

Mains single-phase 230V ±10% 50 Hz (other voltages on request).
- Ambient temperature from -5 °C to +40 °C.
Protection IP 44.

### Components

Metal case
Door lock master switch
Fuses for power line
Fuses for auxiliary circuit.
Fuses for power line.
Frequency converter (1 for each pump).
electronic board type MPS 4000 with microprocessor.
Interface for MPS 4000 electronic board.
- Ventilator for electric panel cooling.
Pressure transducer
Terminal board
Terminals for remote signals
Cable glands

### On request

SRL3 level control for probes against dry running
Clean signal module MSP 1M, Panel Q-MPS 13M
RA 100 control panel for remote alarm

| Code | Pump type | Max corrente erogata | Motor 230V - 3~ | Dimensions |
|---|---|---|---|---|
| | | max A | kW | HxBxP mm |
| 14059370000 | QML 3 VFT 0,45 | 2,4x3 | 0,37 - 0,45 | 700x500x200 |
| 14059380000 | QML 3 VFT 0,75 | 4,2x3 | 0,55 - 0,75 | 700x500x200 |
| 14059390000 | QML 3 VFT 1,5 | 7,5x3 | 1,1 - 1,5 | 700x500x200 |
| 14056970000 | QML 3 VFT 2,2 | 10x3 | 2,2 | 800x600x250 |

# QM, QT

**QTL 3 VFT** **Control panel for 3 pumps with variable speed three-phase motor**

## PANELS FOR SURFACE PUMP ASSEMBLIES

### Construction

Control panel with frequency converter for 3 pumps with variable speed three-phase motor, for constant pressure booster sets. Arranged for SRL 3 level control application for probes connection against dry-running.
Pump operation controlled by an electronic board type MPS 4000 with microprocessor.

### Technical data

Mains 400V 3 ~ ±10% 50/60 Hz (other voltages on request).
- Ambient temperature from -5 °C to +40 °C.
Protection IP 44.

### Components

Metal case
Door lock master switch
Fuses for power line
Fuses for auxiliary circuit.
Fuses for power line.
Frequency converter (1 for each pump).
electronic board type MPS 4000 with microprocessor.
Interface for MPS 4000 electronic board.
- Ventilator for electric panel cooling.
Pressure transducer
Terminal board
Terminals for remote signals
Cable glands

### On request

SRL3 level control for probes against dry running
Clean signal module MSP 1M, Panel Q-MPS 13M
RA 100 control panel for remote alarm

| Code | Pump type | Max corrente erogata | Motor 400V - 3~ | Dimensions |
|---|---|---|---|---|
| | | max A | kW | HxBxP mm |
| 14059400000 | QTL 3 VFT 0,45 | 1,5x3 | 0,37 - 0,45 | 700x500x250 |
| 14048840000 | QTL 3 VFT 0,75 | 2,3x3 | 0,55 - 0,75 | 700x500x250 |
| 14046930000 | QTL 3 VFT 1,5 | 4,1x3 | 1,1 - 1,5 | 700x500x250 |
| 14047140000 | QTL 3 VFT 2,2 | 5,5x3 | 2.2 | 800x600x250 |
| 14047040000 | QTL 3 VFT 4 | 9,5x3 | 3 - 4 | 800x600x250 |
| 14048250000 | QTL 3 VFT 5,5 | 14,3x3 | 5.5 | 800x600x250 |
| 14049760000 | QTL 3 VFT 7,5 | 17x3 | 7.5 | 800x600x250 |
| 14047280000 | QTL 3 VFT 11 | 27,7x3 | 9,2 - 11 | 1700x800x300 |
| 14050350000 | QTL 3 VFT 15 | 33x3 | 15 | 1700x800x300 |
| 14054370000 | QTL 3 VFT 18,5 | 46,3x3 | 18.5 | 1700x1000x400 |
| 14047150000 | QTL 3 VFT 22 | 61,5x3 | 22 | 1700x1000x400 |
| 14047270000 | QTL 3 VFT 30 | 74,5x3 | 30 | 1300x600x300n3 |
| 14052180000 | QTL 3 VFT 37 | 88x3 | 37 | 1300x600x300n3 |
| 14059410000 | QTL 3 VFT 45 | 106x3 | 45 | 1400x800x400n3 |
| 14059420000 | QTL 3 VFT 55 | 145x3 | 55 | - |
| 14059430000 | QTL 3 VFT 75 | 173x3 | 75 | - |

# QM, QT

calpeda

**QTL 4 VFT** **Control panel for 4 pumps with variable speed three-phase motor**

## PANELS FOR SURFACE PUMP ASSEMBLIES

### Construction

Control panel with frequency converter for 4 pumps with variable speed three-phase motor, for constant pressure booster sets.Arranged for SRL 3 level control application for probes connection against dry-running.
Pump operation controlled by an electronic board type MPS 4000 with microprocessor alternating the starting order at each start.

### Technical data

Mains 400V 3 ~ ±10% 50/60 Hz (other voltages on request).
- Ambient temperature from -5 °C to +40 °C.
Protection IP 44.

### Components

Metal case
Door lock master switch
Fuses for power line
Fuses for auxiliary circuit.
Fuses for power line.
Frequency converter (1 for each pump).
electronic board type MPS 4000 with microprocessor.
Interface for MPS 4000 electronic board.
- Ventilator for electric panel cooling.
Pressure transducer
Terminal board
Terminals for remote signals
Cable glands

### On request

SRL3 level control for probes against dry running
Clean signal module MSP 1M, Panel Q-MPS 13M
RA 100 control panel for remote alarm

| Code | Pump type | Current | Motor 400V - 3~ | Dimensions |
|---|---|---|---|---|
| | | max A | kW | HxBxP mm |
| 14059550000 | QTL 4 VFT 0,45 | 0,37- 0,45 | 0,37- 0,45 | 800x600x250 |
| 14059560000 | QTL 4 VFT 0,75 | 0,55 - 0,75 | 0,55 - 0,75 | 800x600x250 |
| 14059570000 | QTL 4 VFT 1,5 | 1,1 - 1,5 | 1,1 - 1,5 | 800x600x250 |
| 14049710000 | QTL 4 VFT 2,2 | 2,2 | 2,2 | 900x600x250 |
| 14047840000 | QTL 4 VFT 4 | 3 - 4 | 3 - 4 | 900x600x250 |
| 14059580000 | QTL 4 VFT 5,5 | 5,5 | 5,5 | 1200x800x300 |
| 14059590000 | QTL 4 VFT 7,5 | 7,5 | 7,5 | 1200x800x300 |
| 14059600000 | QTL 4 VFT 11 | 9,2 - 11 | 9,2 - 11 | 1400x800x400 |
| 14059610000 | QTL 4 VFT 15 | 15 | 15 | 1400x800x400 |
| 14059620000 | QTL 4 VFT 18,5 | 18,5 | 18,5 | 2000x1800x400 |
| 14053940000 | QTL 4 VFT 22 | 22 | 22 | 2000x1800x400 |
| 14059630000 | QTL 4 VFT 30 | 30 | 30 | 2000x1800x400 |
| 14059640000 | QTL 4 VFT 37 | 37 | 37 | 2000x1800x400 |
| 14059650000 | QTL 4 VFT 45 | 45 | 45 | 2000x1800x400 |
| 14059660000 | QTL 4 VFT 55 | 55 | 55 | 2000x1800x400 |
| 14059670000 | QTL 4 VFT 75 | 75 | 75 | 2000x1800x400 |

## RA Control panel for remote alarm

**RA 100A**

**RA 100**

### Construction

RA 100 Control panel for remote alarm.
RA 100A Self powered control panel for remote alarm.

### Technical data

Mains single-phase 220-230 V.
- Ambient temperature from -5 °C to +40 °C.
Protection IP 44.

### Components

Box in thermoplastic material
Transformer card with terminals.
Buttons card with led.
Flashing light.
Buzzer.
Cable glands
Charger (only for RA 100A).
Battery (only for RA 100A).

| Code | Pump type | Dimensions HxBxP mm |
|---|---|---|
| 14027900000 | RA 100 | 160x120x75 |
| 14042960000 | RA 100A | 250x200x180 |

## Q-MSP Volt free contact control panel

### Construction

A module featuring a free contact (0,1A - 50V), to be connected to an alarm signal system.

### Technical data

Ambient temperature from -5 °C to +40 °C.
Protection IP 44.

| Code | Pump type | Dimensions HxBxP mm |
|---|---|---|
| 14045600000 | Q-MSP 9M | 160x120x75 |
| 14045960000 | Q-MSP 13M | 160x120x75 |

# ACCESSORIES

## SMAT ELECTRONIC PROTECTION DEVICE FOR PUMPS

### Construction

Electronic device for the protection of electric pumps, stops the pump in the event of water shortage and motor overcurrent.
Electrical connection
To pump motor cable (Schuko plug built-in)
- To electric line socket (Schuko plug built-in)

### Applications

For protection of the pump:
Protects the pump against dry running and overcurrent

### Operating conditions

Maximum ambient temperature max 55 °C.
Single-phase mains voltage: 230 V ±10%.
Frequency: 50 - 60 Hz.
Protection IP 65.
Pump motor current Minimum 3 A - Maximum 8 A.

### Control Panel

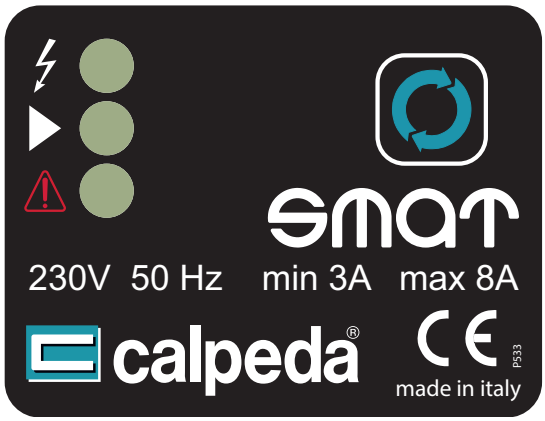


### Functioning mode

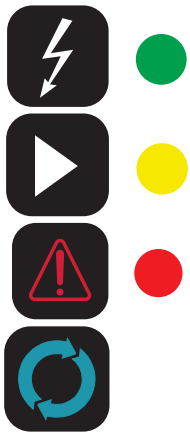

Green LED on = Device powered.

Yellow LED on = Pump running

Flashing red LED = Water shortage
Solid red LED illuminated = Overcurrent

RESTART button: Motor data acquisition - Reset after fault

### Dimensions and weights

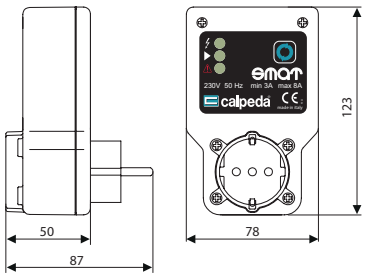


### Examples of installations

To operate, the pump's electrical power supply must be connected to the mains. For this, the power supply plug of the pump must be inserted into the device's socket, which is then connected to the power source (see below Figure).In the event of a water shortage at the suction, the device will stop the pump to protect it from dry running.This malfunction is indicated by the red 'Failure' LED.If the current absorption exceeds 8 amperes, the device will stop the pump motor to protect it from over-current.This malfunctioning is indicated with the red "Failure" Led lit up.To restore normal operation to the device and the system simply press the red "Restart" button.
In case of a blackout, it will automatically rearm again several seconds after the electricity returns.

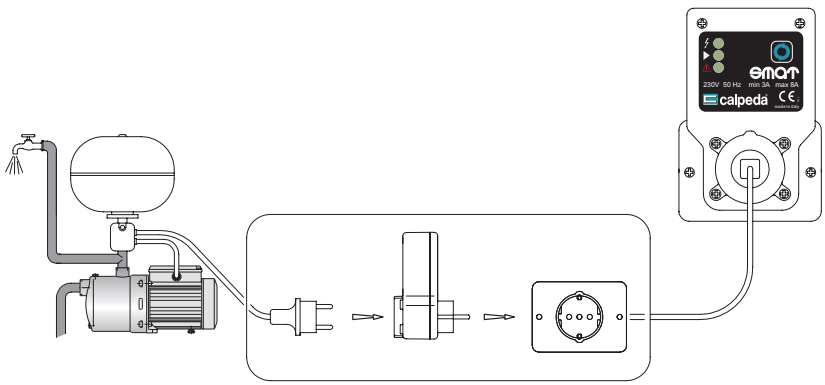

# ACCESSORIES

calpeda

## PMAT PRESSURE SWITCHES FOR WATER SYSTEM APPLICATIONS

### Construction

Pressure switches for use with water in autoclave systems
- The switch ensures automatically the starting and stopping of the electric pump according to the set pressure values
- Electric contacts: normally closed and made of brass alloy with Ag-Ni surfacing
- Terminals with M4 screws and 8x8 mm pressure dice
- NBR rubber membrane with textile insert (food grade for PMAT 5M- 10, PMAT 5M/T-16, PMAT 5.5M/T-16)
- ¼"F hydraulic connection made of galvanized steel
- Standard protection degree IP 44
- Liquid temperature up to 55 °C
- Max ambient temperature: 55°C
- Tear resistant cable clamps

### Adjustment key included

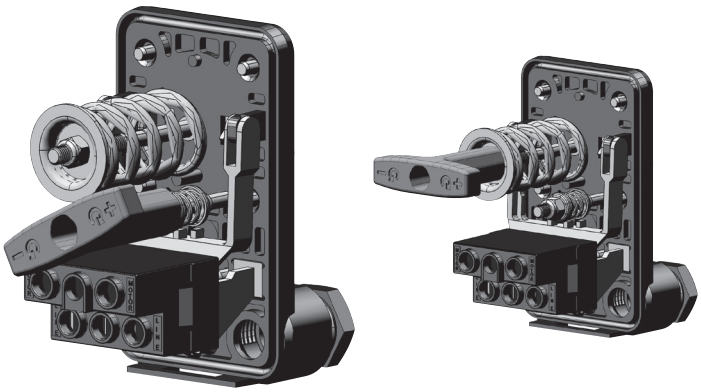

### Technical data

| 2-pins | max A | Pressure range | Differential | | Factory setting |
|---|---|---|---|---|---|
| | | bar | min bar | max bar | bar |
| PMAT 5M-10 | 10 | 1 - 5 | 0,6 | 2,3 | 1,4 - 2,8 |

Maximum rated voltage 250V

| 3 - pins | max A | Pressure range | Differential | | Factory setting |
|---|---|---|---|---|---|
| | | bar | min bar | max bar | bar |
| PMAT 5M/T-16 | 16 | 1 - 5 | 0,6 | 2,3 | 1,4 - 2,8 |
| PMAT 5,5M/T-16 | 16 | 1,5 - 5,5 | 0,8 | 2,2 | 1,8 - 3 |
| PMAT 12M/T-16 | 16 | 3 - 12 | 1,5 | 5 | 5 - 7 |

Maximum rated voltage 500V

### Dimensions

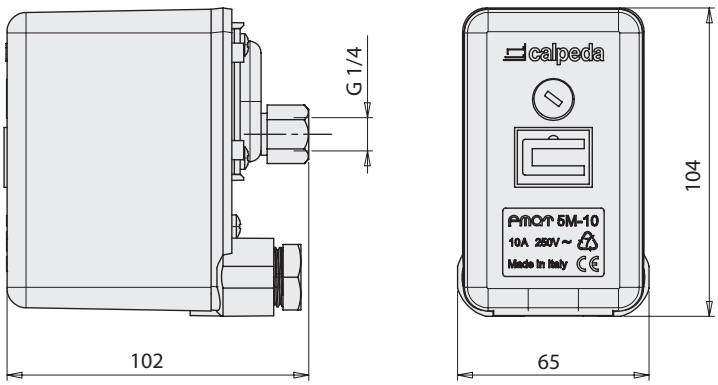


### Connection diagram

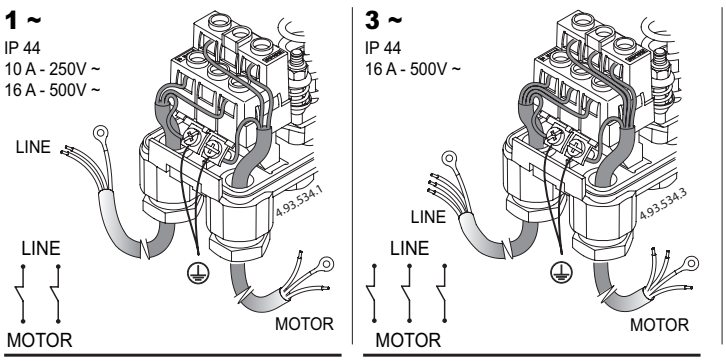


### Characteristic curves

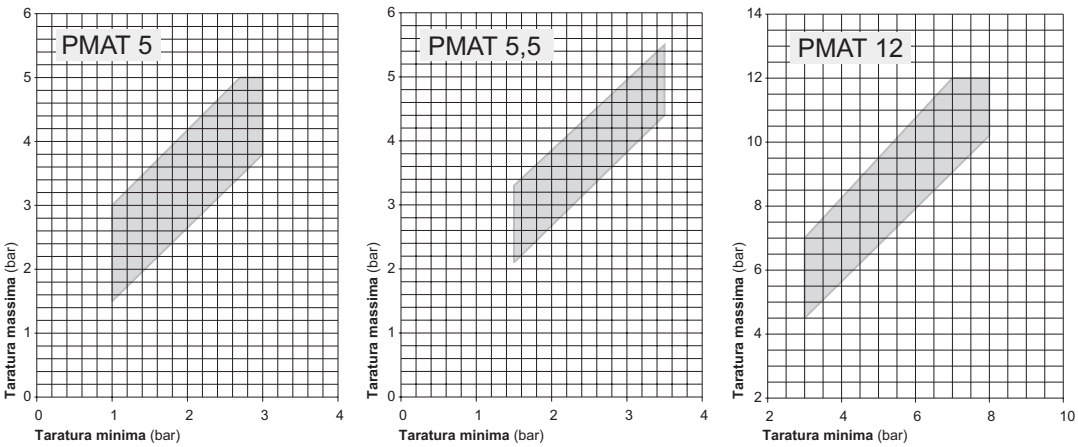

# ACCESSORIES

## ARIAMAT AUTOMATIC AIR FEEDER

ARIAMAT
AR 300E
AR 1000E
AR 2000E
Complete with connections and 1 m polyethylene pipe

### Materials

| Components | Materials |
|---|---|
| upper elbow | Brass |
| valve | Brass |
| Housing | Polycarbonate |
| Ball valve | Rubber |
| Conical fittings | Brass |
| Pipe | polyethylene |

### Construction

The automatic air feeder ARIAMAT controls the air cushion in the pressure vessel by replacing the air dissolved in the water at every pump start.
This device limits the number of pump starts and stops, allows a better use of the water reserve and improves the overall performance of the automatic pressure system.

### Functioning mode

ARIAMAT operation is explained in pictures 1-2-3-4.
At the end of every cycle, ARIAMAT AR 300E, AR 1000E and AR 2000E let in the vessel 300, 1000 and 2000 cm3 of air respectively.
For a good operation of ARIAMAT it is necessary to have enough suction pressure in the pipe whilst the pumps are running.
If the pumps work under positive suction head and water falls to the suction inlet, there will not be enough suction pressure in the suction pipe to allow a correct operation of ARIAMAT; in this case, it is necessary to create an artificial loss in the suction pipe, by closing gradually the gate valve when the pump is running until the water level in the ARIAMAT starts dropping.
When a sufficient suction pressure to grant a safe ARIAMAT operation cannot be achieved, it is recommended to feed the vessel with a compressed air system and level probes.

### Description of the supply

The ARIAMAT is normally fitted on our automatic water systems.The supply of ARIAMAT, as a spare part to be installed by the customer, includes:
ARIAMAT assembled with upper elbow and air valve;
Polyethylene tube with ring nut and fitting for connection to the pump suction side.

| Pressure in m | Pressure vessel capacity in litres | | | | | | | | | | |
|---|---|---|---|---|---|---|---|---|---|---|---|
| | 100 | 200 | 300 | 400 | 500 | 750 | 1000 | 2000 | 3000 | 4000 | 5000 |
| 14/28 | AR 300E | | | | | | AR 1000E | | | | AR 2000E |
| 20/30 | AR 300E | | | | | AR 1000E | | | | | AR 2000E |
| 30/40 | AR 300E | | | AR 1000E | | | | | | AR 2000E | |
| 35/55 | AR 300E | | | AR 1000E | | | | | AR 2000E | | |
| 55/70 | AR 300E | | AR 1000E | | | | | | AR 2000E | | |
| 75/95 | AR 300E | AR 1000E | | | | The use of an air compressor is recommended. | | | | | |

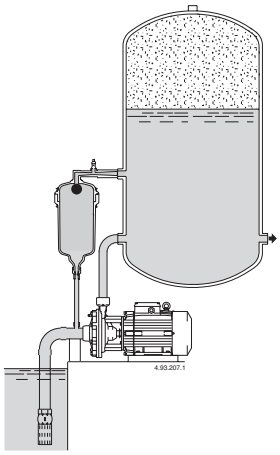


1) When the pump is stopped, ARIAMAT is full of water.

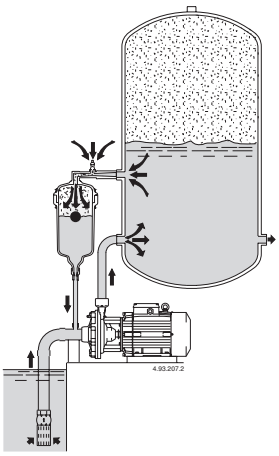


When starting, the pumps creates a suction pressure which also takes the water from ARIAMAT, allowing some more water to come from the vessel. The water through the ARIAMAT venturi sucks air from the upper valve.

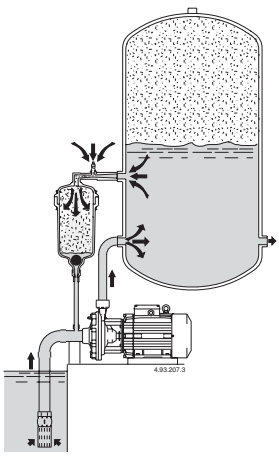


The water level in the ARIAMAT drops until the ball valve moves to the bottom of the ARIAMAT closing the hole of the pipe connected to the pump. ARIAMAT is now full of water.

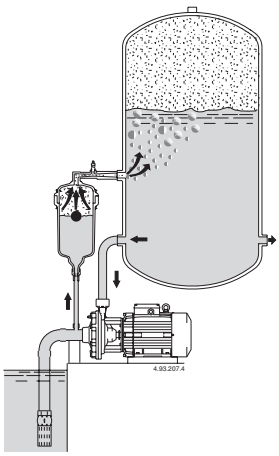


When stopping, there is a back-flow of water from the vessel through the pump, to the ARIAMAT. Air is pushed inside the vessel.

# ACCESSORIES

## VALVES

check valve
- VNR 1
- VNR 1 1/4
- VNR 1 1/2
- VNR 2

Foot valve:
VDF 1
VDF 1 1/4
VDF 1 1/2
VDF 2

## PRESSURE GAUGES

axial connection type
MA 0-6
MA 0-6 ABS

radial connection type
MR 0-10
MR 0-12
MR 0-16

## CONNECTOR

Type:
RA5 H 92
RA5 H 105
connection G 1

## LEVEL PROBES

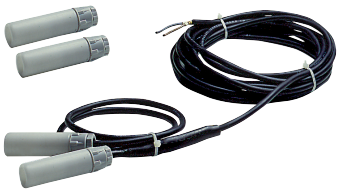

Type:
SL 2 electrodes
SLA Assembled level probes
(cable length on request)

example:
**SLA 30**
SLA Assembled level probes
30 = cable length 30 m

## FLOAT SWITCH

Type:
INTGALL (cable 3m, 5m, 10m)

Type:
INTGALL M (5m, 10m, 20m cable)

Type:
INTGALL A (5m, 10m cable)

## SYSTEM FOR AIR INTAKE

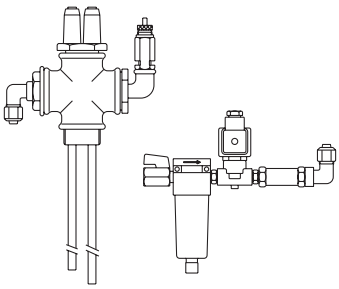

Level probe assembly with solenoid valve

## SYSTEM FOR AIR INTAKE

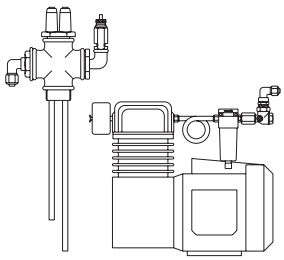

Kit of level probes with compressor

## FLEXIBLE HOSE

| Pump type | d x length |
|---|---|
| FP 1-630 | G 1 x 630 |
| FP 1-680 | G 1 x 680 |

# ACCESSORIES

## SPHERICAL VESSEL

Type:
SS 24: G1 connection, 24l capacity
BUTYL rubber diaphragm.

## CYLINDRICAL TANK WITH BASE AND FEET

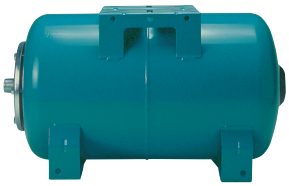

Type:
SC 20 BP: G1 connection, 20l capacity
BUTYL rubber diaphragm.

## VERTICAL STAINLESS STEEL CYLINDRICAL TANK

Type:
SCX 20: G1 connection, 20l capacity
BUTYL rubber diaphragm.

## STAINLESS STEEL CYLINDRICAL TANK WITH BASE AND FEET

Type:
SCX 20 BP: G1 connection, 20l capacity
BUTYL rubber diaphragm.

## CE 97/23 PED APPROVED PRESSURE VESSELS (Air tanks)

**Hot galvanized vessels**

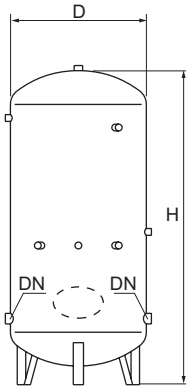


| Pump type | Dimensions D x H mm | DN | weigth Kg |
|---|---|---|---|
| 100- 5 | 400 x 1020 | G 1 | 32 |
| 200- 5 | 450 x 1440 | G 1 | 48 |
| 300- 8 | 550 x 1500 | G 1 1/2 | 65 |
| 500-8 | 650 x 1820 | G 2 | 105 |
| 800-8 | 800 x 1900 | G 2 | 145 |
| 1000-8 | 800 x 2150 | G 2 1/4 | 160 |
| 1000-12 (1) | 800 x 2300 | G 2 1/4 | 203 |
| 1500-8 (1) | 950 x 2500 | G 2 | 255 |
| 2000-8 (1) | 1100 x 2570 | G 2 1/4 | 330 |
| 2000-12 (1) | 1000 x 2780 | G 2 1/4 | 387 |
| 3000-8 (1) | 1250 x 2930 | G 3 | 470 |
| 3000-12 (1) | 1200 x 2930 | G 3 | 596 |
| 4000-8 (1) | 1450 x 3090 | G 3 | 620 |
| 4000-12 (1) | 1450 x 3090 | G 3 | 880 |
| 5000-8 (1) | 1450 x 3590 | G 4 | 715 |
| 5000-12 (1) | 1450 x 3590 | G 4 | 1020 |

The vessels are suitable for water up to 50 °C
The vessels are all approved at manufacturer's premises and are supplied complete with safety valve, tested pressure gauge and fittings.
(1) Tanks subject to annual inspection by authorised bodies, by the customer.(Pressure x Volume P x V > 8000; or nominal pressure >11.76 bar).

## CE 97/23 PED APPROVED MEMBRANE VESSELS (Membrane vessels)

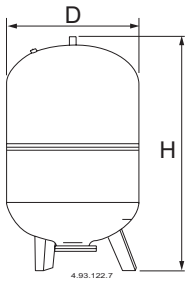


| Pump type | PRESSURE bar | Dimensions D x H mm | DN | weigth Kg |
|---|---|---|---|---|
| SM 60 V | 10 | 382 x 845 | G 1 | - |
| SM 80 V | 10 | 450 x 850 | G 1 | - |
| SM 100 V | 10 | 450 x 950 | G 1 | - |
| SM 200 V | 10 | 550 x 1255 | G 1 1/2 | - |
| SM 300 V | 10 | 630 x 1405 | G 1 1/2 | - |
| SM 500 V | 10 | 780 x 1550 | G 1 1/2 | - |
| SM 750 V | 10 | 780 x 1940 | G 1 1/2 | - |
| SM 1000 V | 10 | 780 x 1940 | G 2 | - |

EPDM diaphragm
Temperature -10 ÷ +100 °C
With safety valve and pressure gauge 0÷10 bar

# Technical appendix

## How to select a centrifugal pump

The selection of a centrifugal pump should be made according to the actual characteristics and conditions of the plant.
The required data for a correct selection are the following:

**Flow Q**
Quantity of fluid delivered by the pump in the unit of time, generally expressed in m3/h.

**Total manometric head Hmt**
It is considered as the sum between the geometric head exsisting between the fluid levels and the head loss due to frictions from the fluid passage in the pipework, into the pump and relevant hydraulic accessories.

The expression is the following:
**Hmt = Hg + Δpc mt fluid column**

**Hg**= geometric head inlet (Hga) + geometric head outlet (Hgp)
**Δpc**= sum of head loss of the plant calculated from the following data:
- Diameter, length and material of the suction and pressure pipes (see table no. 1 and 1.1)
- Quantity and type of bends along the path and hydraulic accessories such as foot valves with suction, shut-off valves, check valves and possible filters (see table no. 2).
- Viscosity and specific weight of the liquid.

Pay attention to the manometric suction lift Hga + Δpc asp, which should be compared with the suction capability of the pump.
This suction capability or NPSHr is defined as net positve suction head and its value is obtained from a curve in accordance with the flow.

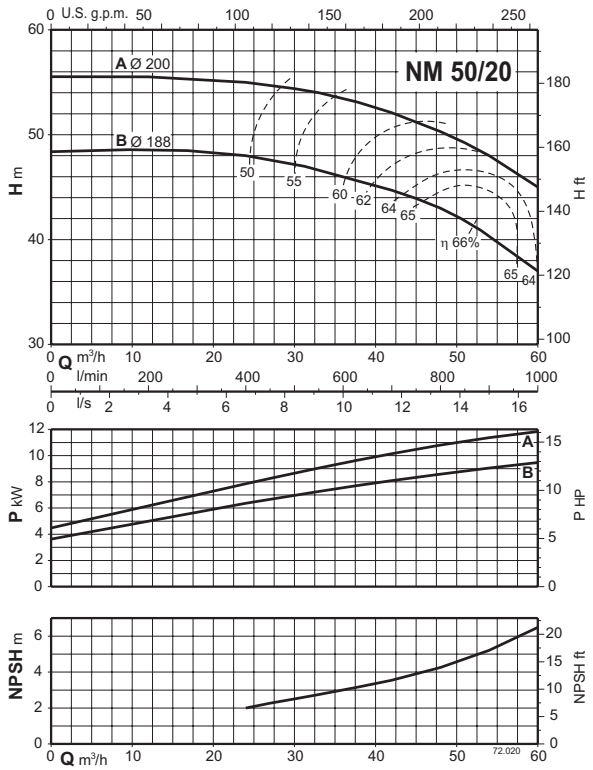


For this purpose, once the pump has been selected according to the required flow and head, where possible at the middle of the curve, check the following simplified formula:

12 mt ± Hga - Δpc asp - tv NPSH required + 0.5 mt (a)

**Hga** = difference in height between the free water level and the pump axis, with minus sign if the pump is above the free water level;
**Δpc asp** = the sum of distributed (piping) and concentrated (valves, elbows, etc.) pressure drops in the suction line
**tv** the vapour pressure of the liquid (depending on the temperature, see the following graph for water).

**NOTE**
In the case of closed circuits (circulators), formula (a) becomes:
12 mt + Hga - tv > NPSH required + 0.5 mt
where Hga is now the manometric head in the suction line.

**H2O vapour pressure**

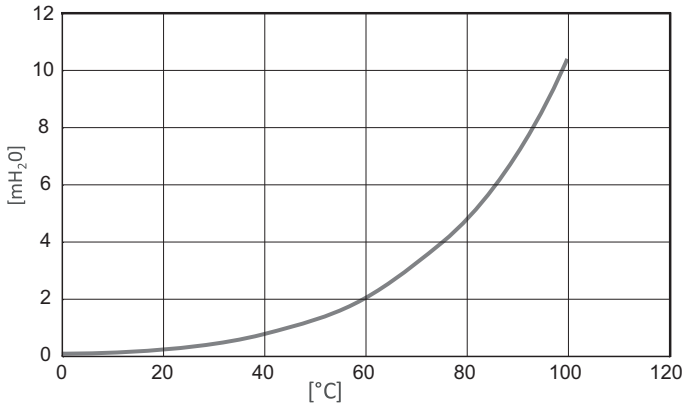


**CHARACTERISTIC DATA OF THE PUMPS**
Once the flow (Q) and total manometric head of the installation (Hmt) are established, the pump absorbed power N should be calculated through the following formula:

$$N = \frac{Q \times H \times \gamma}{367 \times \eta p} \text{ in Kw}$$

where:

Q = Flow in m3/h
H = Head (m)
γ = Fluid density (water = 1 kg/dm3)
ηp = Pump efficiency (Ex. Pump efficiency 68% = ηp = 0.68)

The pumps are normally connected to electric motors, which operate at 2900 rpm with 2-pole motors at 50Hz, or at 1450 rpm with 4-pole motors at 50Hz. However, they can run at any other speed within the limits of design.
Therefore, when changing the number of revolutions, the pump performance will change according to the following rules:

$$Q2 = Q1 \times \frac{n_2}{n_1}$$ The flow in proportion to the number of revolutions:

$$H2 = H1 \times \left(\frac{n_2}{n_1}\right)^2$$ The head, in proportion to the square of the number of revolutions

$$N2 = N1 \times \left(\frac{n_2}{n_1}\right)^3$$ The absorbed power, in proportion to the cube of the number of revolutions

# Technical appendix

## How to select a centrifugal pump

**Calculation example for the selection of a centrifugal pump**

*Case A*

- Q (Flow) = 42 m3/h
- Hga (geometric head inlet) = 3,5 m
- Hgp (geometric head outlet) = 39 m
- 5 m DN 100 mm diameter suction pipe complete with 1 elbow and 1 foot valve
- 70 m DN 80 mm diameter delivery pipe with 1 non-return valve, 1 gate valve and 3 sweep elbows

**Hg** = Hg = Hgp + Hga = 39 + 3,5 = 42,5 m Geometric head of the installation
**Δpc** = total head loss

| | |
|---|---|
| **Suction side:** | |
| 5 m Ø100 piping | pc = 0,12 m. |
| 1 Elbows | pc = 0,045 m. |
| 1 Foot valve | pc = 0,46 m. |
| **Delivery side:** | |
| 70 m Ø 80 pipe | pc = 5,25 m. |
| 1 Non-return valve | pc = 0,5 m. |
| 1 Gate valve | pc = 0,05 m. |
| 3 Elbows | pc = 0,09 m. |
| **Total** | **Δpc = 6,5 m.** |

Considering that the calculation has been made for new pipes, an increase of 15/20% is to be applied for ageing etc. Therefore the total head loss Δp amounts to about 8 m.
Therefore, the total manometric head which the pump must achieve is:

Hmt = Hg + Δp = Hgp + Hga + Δpc = 39 + 3,5 + 8 = 50,5 m total.

The pump type NM 50/20AE can be chosen (see pump diagram)

Operation with suction lift

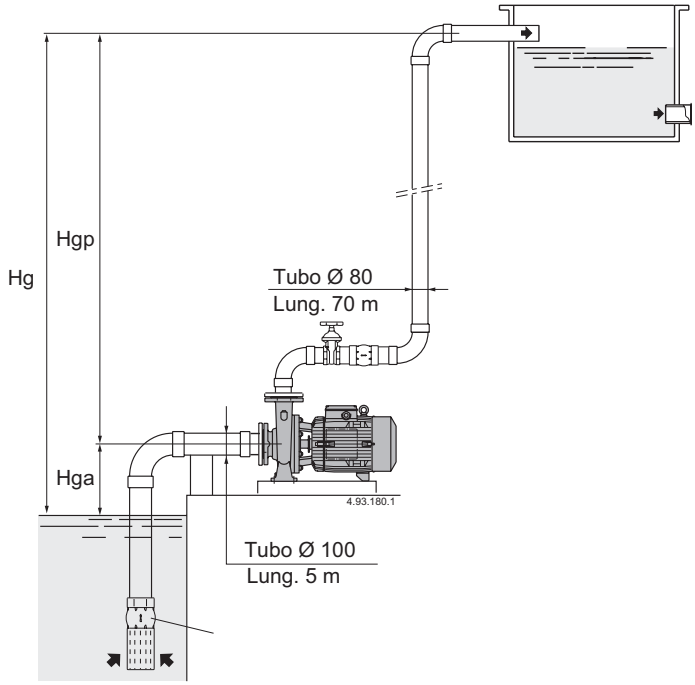


*Case B*

- Q (Flow) = 42 m3/h
- Hga (geometric head inlet) = 3,5 m
- Hgp (geometric head outlet) = 39 m
- 5 m DN 100 mm diameter suction pipe complete with 1 gate valve and 1 foot valve
- 70 m DN 80 mm diameter delivery pipe with 1 non-return valve, 1 gate valve and 3 sweep elbows

**Hg** = Hg = Hgp - Hga = 39 - 3,5 = 35,5 m Geometric head of the installation
**Δpc** = total head loss

| | |
|---|---|
| **Suction side:** | |
| 5 m Ø100 piping | pc = 0,12 m. |
| 1 Non-return valve | pc = 0,05 m. |
| 1 Gate valve | pc = 0,05 m. |
| **Delivery side:** | |
| 70 m Ø 80 pipe | pc = 5,25 m. |
| 1 Non-return valve | pc = 0,5 m. |
| 1 Gate valve | pc = 0,05 m. |
| 3 Elbows | pc = 0,09 m. |
| **Total** | **Δpc = 6,5 m.** |

Considering that the calculation has been made for new pipes, an increase of 15/20% is to be applied for ageing etc. Therefore the total head loss Δp amounts to about 8 m.
Therefore, the total manometric head which the pump must achieve is:

Hmt = Hg + Δp = Hgp - Hga + Δpc = 39 - 3,5 + 8 = 43,5 m total.

The pump type NM 50/20AE can be chosen (see pump diagram)

Positive suction head operation

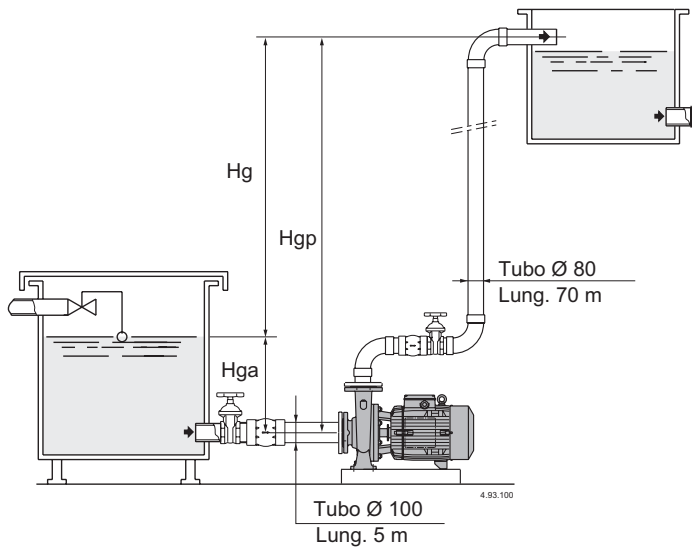

# Technical appendix

## How to select a centrifugal pump

### ACCESSORIES FOR WATER SUPPLY

**Foot valve with suction unit** - Sealing member installed on the lower end of the suction pipe.It prevents the water coming out from the piping and pump at every plant stop.It must be always immersed in the fluid at an installation depth which allows a p

**Non-return valve** - It must be installed on the pump delivery port to avoid reflux in case of a sudden stop of the plant.It is recommended using a type fitted with an inner return spring and with ogive shutter, as this will help to diminish water hammering.

**Gate valve** - The installation of a gate valve is very important.In addition to allowing the pump to be dissasembled without emptying the plant, it is used to start the plant and to adjust the flow.

### PIPING

The piping must be selected in-line with the water velocity which is recommended to be 1.5 meter per second on the suction side and 3 meter per second on the delivery side.The calculation of the suction piping must be carefully checked so as to avoid the maximum head loss and allow the pumps maximum suction capability. The piping must be perfectly tight and have no counterslopes towards the pump port, so to avoid the development or entrapment of air bubbles or pockets.

**All the piping must be secured to rests, so that they will not weigh on the pump ports.**

| PROBLEM | PROBABLE CAUSES |
|---|---|
| Problems at the pump | Jammed pump This may happen after periods of inactivity due to inner oxidation. |
| | To release smaller sized monobloc electropumps use a screwdriver at the notch on the back part of the shaft. |
| | For the larger sizes, turn on the shaft or the flexible coupling |
| Pumps which do not prime | Pump and/or suction pipe with air entraped. |
| | Uncomplete priming or totally unprimed. |
| | Possible air entering from taps, drain or fill plugs, joints or stuffing box |
| | Foot valve not fully immersed in the fluid or obstructed by deposits. |
| | Suction lift too high compared with the capability of the pump. |
| | Wrong direction of rotation |
| | Wrong number of revolutions |
| Insufficient flow | Piping and accessories of too small a diameter which cause too high head loss. |
| | Jammed impeller with presence of debris in the vanes. |
| | Corroded or broken impeller |
| | Impeller wear rings and/or pump casing worn by abrasion. |
| | Gas presence in the water, or too high fluid viscosity in case of fluids different from water. |
| Noise and vibrations in the Pump | Unbalanced rotary part or worn ball bearings. |
| | pump and piping not properly secured. |
| | Too low flow rate for the selected pump |
| | Operation with cavitation |
| Overloaded motor | Pump characteristics higher than those of the plant |
| | Fixed and rotary parts in contact tending to seize owing to a lack of lubrication |
| | Too high rotation speed |
| | Wrong mains supply |
| | Poor unit allignement |
| | Fluid with too higher density than the design |

# Technical appendix

## TO SELECT A PRESSURE BOOSTING SET

**Required quantity of water**
The public water-supply system is normally capable of supplying water at an adequate pressure and capacity level to the various outlets connected to it.
In those cases where a water-supply system is non-existent or insufficient for correct operation of the various facilities, a pressure-boosting system has to be installed to ensure an acceptable level of pressure and capacity also at the outlets in the most unfavourable positions.
The size of the water-supply unit is determined according to the quantity of water and pressure required.

**Residential buildings**
The main data needed for calculation of the quantity of water required is given in the following list:
- the number of outlets
- consumption per each type of outlet (Tab.1)
- the contemporaneity factor (Fc)

**Maximum consumption at points of demand**

| **Outlet Qu.** | **delivered (l/min)** |
|---|---|
| Sink | 10 |
| Wash-basin | 10 |
| Bath/whirlpool tub | 18 |
| Shower | 12 |
| WC - flush-tank type | 7 |
| WC - fast-feed type | 90 |
| Bidet | 6 |
| Washing machine | 12 |
| Kitchen sink | 12 |
| Dishwasher | 8 |
| Outlet w/ 1/2” tap | 20 |
| Outlet w/ 3/4” tap | 25 |

The maximum theoretical requirement is given by the sum of the quantities of water delivered to the various outlets of an appartment multiplied by the number of appartments.
In practice, it is generally found that only some of the outlets are used simultaneously.
The contemporaneity factor (Fc) allows for definition of the real maximum delivery that may be required by the outlets.
The following formulae are used to calculate the Fc factor. The value “Ut” is the total number of outlets (the number of outlets in an appartment multiplied by the number of appartments).

$$Fc = \frac{1}{\sqrt{0{,}85 \times Ut}}$$ Appartments with 1 toilet - flush-type tank:

$$Fc = \frac{1}{\sqrt{0{,}7 \times Ut}}$$ Appartments with 1 toilet - fast-feed type:

$$Fc = \frac{1}{\sqrt{1{,}1 \times Ut}}$$ Appartments with 2 toilets - flush-type tank:

$$Fc = \frac{1}{\sqrt{0{,}83 \times Ut}}$$ Appartments with 2 toilets - fast-feed type:

Diagram A gives the values of actual delivery, which depend on the number of appartments connected to the water-supply system. Seven outlets are hypothesized for one-bathroom appartments and ten outlets for two-bathroom appartments.

**Non-residential buildings**
For calculation of quantities of water required, the following types of building are considered:
- offices
- shopping centres
- hospitals
- hotels

These buldings require quantities of water greater than those needed in residential buildings.
Diagram B shows the values of actual delivery for the main types of building. The values are based on hypothetical numbers of persons present in these buildings.
These values offer a guideline and may vary in accordance with particular requirements of projects.

# Technical appendix

## TO SELECT A PRESSURE BOOSTING SET

### A Consumption in residential buildings

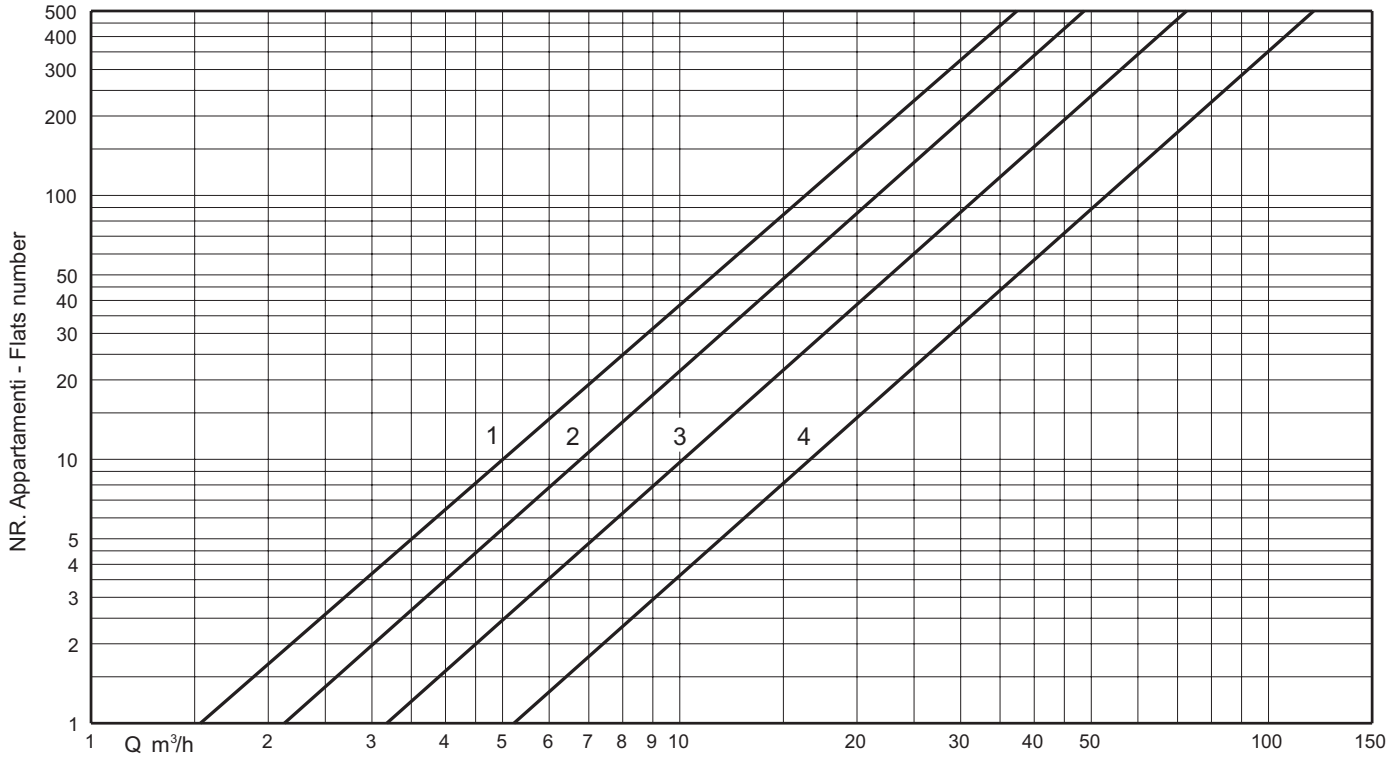


3 Flats with 1 bathroom, flush tank WC
4 Flats with 2 bathrooms, flush tank WC
5 Flats with 1 bathroom, flush valve WC
6 Flats with 2 bathrooms, flush valve WC

### B Consumption in non-residential buildings

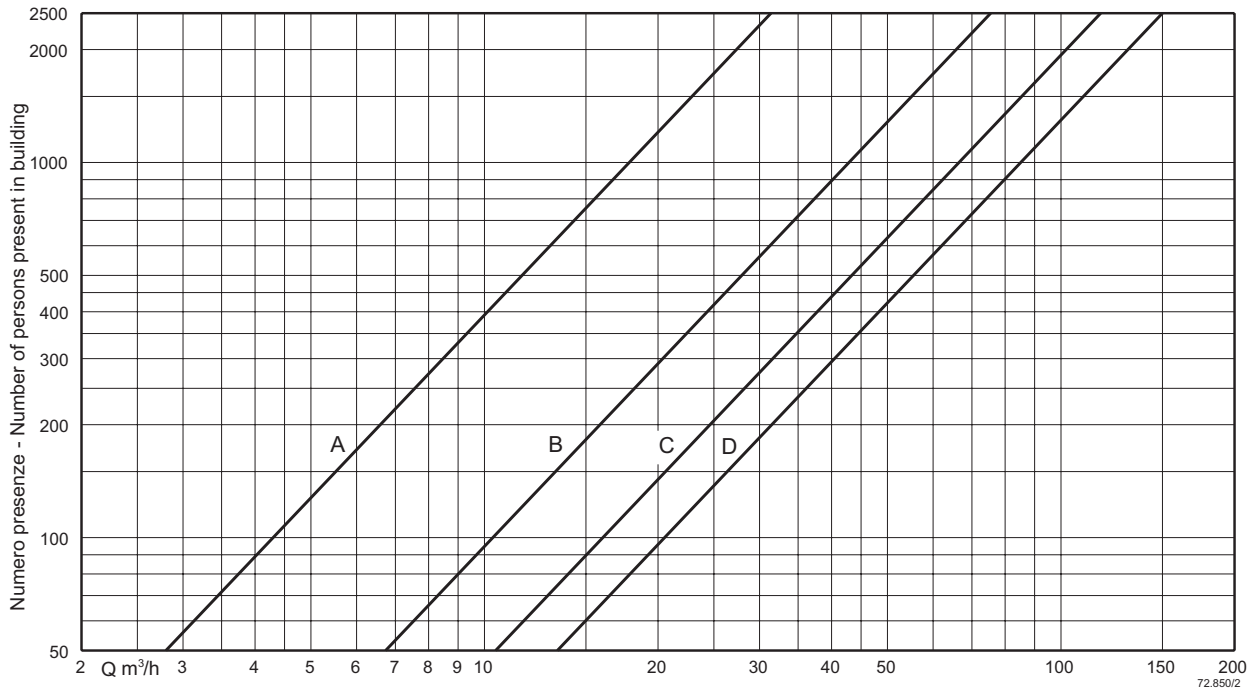


A Offices
B Shopping centres
C Hospitals
D Hotels

# Technical appendix

## TO SELECT A PRESSURE BOOSTING SET

**Delivery head**

The outlet pressure required for proper operation of electrical appliances must not be lower than 1.5 bar and not greater then 4-5 bar.
When the pressure level is insufficient and to such a degree that it impedes operation of domestic appliances, a pressure-boosting system must be installed to ensure adequate pressure also at the more unfavourably—located points of demand.

The values to consider for calculation of the pressure level are the following:
- **Hg** geodetic head between the pressure-boosting unit and the highest outlet.
- **Ha** -the suction lift.
- **Pi** the initial pressure (or positive suction head).
- **Pr** - the minimum residual pressure at the highest outlet (normally 1.5 bar).
- **Pc** - the system head loss.
- **Δp** - the difference in pressure between starting and stopping pumps.

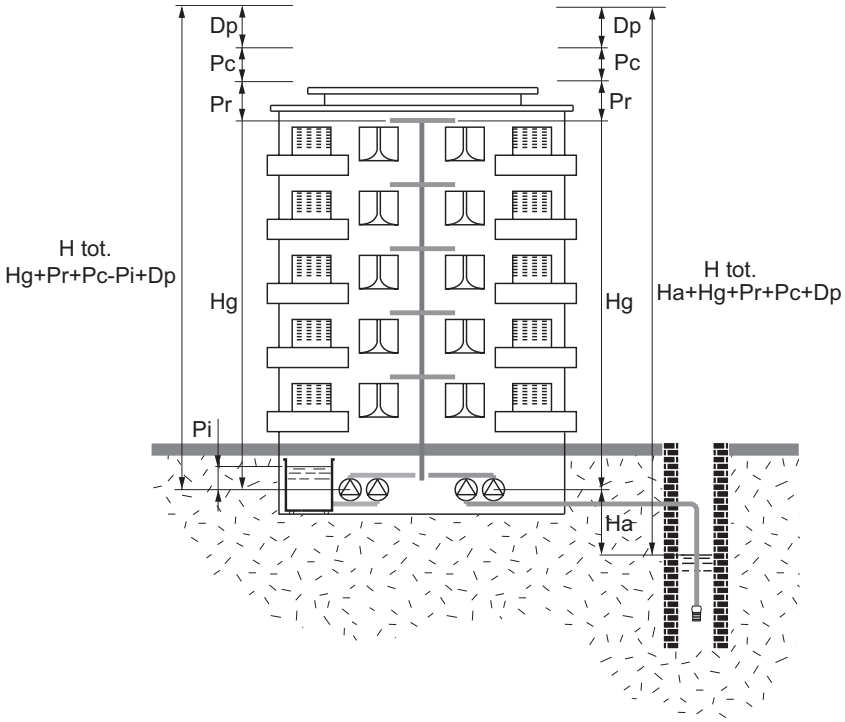


When the pumps draw water from a well, the dynamic height difference (Ha), when pumps are operating, should not exceed 4 m.
A greater suction head or erroneous sizing of the suction pipe may cause improper operation of the pumps - e.g. cavitation and priming loss.

The pumps are installed with a positive suction head when they are connected to a raised tank or a pressurized primary collection tank.
The pumps therefore have an initial pressure at the suction port which can vary from 0.1 bar (suction with a collection tank) to 2-3 bar (with suction from a pressurized primary collection tank).
When choosing a pressure-boosting system, the positive value of the initial pressure (Pi) must be considered as a value to be subtracted from the height (Hg).

The system head loss (Pc) are given by the sum of the losses of the pipes (including the suction pipe) added to the losses due to gate valves, nonreturn valves, water purifiers, counters, filters, elbows etc.

Head loss in the tubes, caused by the friction of the water against the inner surface of the pipelines, may be quantified as 0.5 m per floor in the case of new systems and 1 m per floor in the case of old systems.

To avoid pressure levels greater than 4-5 bar arriving at outlets on the lower floors of apartment blocks and other buildings with a height greater than 30 m (about 10 floors), pressure reducers must be installed at the offtake point of the lower floors or otherwise two pressure-boosting units can be installed: one for the lower floors and one for the upper floors.

# Technical appendix

## TO SELECT A PRESSURE BOOSTING SET

**Surge tanks**
The purpose of surge tanks is to retain a quantity of water, under pressure, thus avoiding continuous pump starts, as water is demanded.
The selection of the vessel must be made in-line with the pump flow and pressure and number of starts allowed by the motor.

For water pressure units with more than one pump, the selection of the vessel should refer to the data for one pump only.
- **The surge vessel may be of the following type:**

a) Air cushion vessels
b) Membrane vessels

**Air cushion vessels**
In this type of vessels the air and water are in contact with each other. This will therefore result in a decrease of air as it dissolves into the water.
The installation will therefore require an automatic air feed ("Ariamat" air feeder, compressor or auto valve connected to existing compressed air network).
Air cushion vessels are normally manufactured from hot galvanized sheet steel, with rated pressures from 6 to 12 bar and capacity from 100 to 5000 ltrs, complete with safety valves, pressure gauge and level indicator.

**Calculation to size an air cushion vessel.**

$$Vt = \frac{1{,}25 \times Qm \times (P1 + 10)}{4 \times Z \times (P1 - P2)}$$

where:
Vt = Total volume of air cushion vessel in m3
Qm = Average pump flow in m3
P1 = Maximum set pressure of pressure switch
P2 = Minimum set pressure of pressure switch
Z = Maximum number of starts/hour allowed by the motor (see table).
Qm é la media fra la portata alla pressione di avviamento (Q min) e la portata alla pressione di arresto (Q max):

$$Qm = \frac{Qmin + Qmax}{2}$$

example: Pump MXV 40-807
P1 = 70 m
P2 = 50 m
Qm = 9,45 m3/h
Z = 23 starts/hour

$$Vt = \frac{Qm}{4 \times Z} \times \frac{1}{1 - \frac{(P2 - 2)}{P1}}$$

From the calculation, it would result in the selection of a 500 litre vessel.

**Membrane autoclaves**

These pressure tanks are equipped with an internal membrane into which the pumped water flows.
At the time of commissioning, they must be pre-inflated to a certain pressure, depending on the calibration value of the pressure switch.

Calculation to size a membrane vessel

$$Vt = \frac{1{,}25 \times 9{,}45 \times (70 + 10)}{4 \times 23 \times (70 - 50)} = 0{,}514\ m^3$$

where:
Vt = Total volume of air cushion vessel in m3
Qm = Average pump flow in m3
P1 = Maximum set pressure of pressure switch
P2 = Minimum set pressure of pressure switch
Z = Maximum number of starts/hour allowed by the motor (see table).

example: Pump MXV 40-807
P1 = 70 m
P2 = 50 m
Qm = 9,45 m3/h
Z = 23 starts/hour

$$Vt = \frac{9{,}45}{4 \times 23} \times \frac{1}{1 - \frac{(50 - 2)}{70}} = 0{,}327\ m^3$$

From the calculation it will result in the selection of a 300 litre membrane vessel.

# Technical appendix

calpeda®

## General data

**Number of starts/hour allowed for CALPEDA motors**

| Rated motor power output kW | 0,25 | 0,37 | 0,55 | 0,75 | 1,1 | 1,5 | 2,2 | 3 | 4 | 5,5 | 7,5 | 9,2 | 11 | 15 | 18,5 | 22 | 30 | 37 | 45 |
|---|---|---|---|---|---|---|---|---|---|---|---|---|---|---|---|---|---|---|---|
| Max. number of starts/hour Z | 59 | 51 | 44 | 38 | 35 | 30 | 25 | 23 | 20 | 18 | 16 | 15 | 14 | 12 | 11 | 10 | 9 | 9 | 8 |

The number of starts/hour mentioned in the table is approximate.
The maximum admissible starts/hour depends on the pump model and are mentioned in the original operating manual.

**Table no. 1 Head loss in m for steel pipes**

| Pipe | Pipe | Q m3/h | 1 | 3 | 6 | 9 | 12 | 18 | 24 | 30 | 36 | 42 | 48 | 60 | 90 | 120 | 180 | 240 | 300 | 360 | 420 | 500 | 600 |
|---|---|---|---|---|---|---|---|---|---|---|---|---|---|---|---|---|---|---|---|---|---|---|---|
| G | Ø mm | Q l/min | 16 | 50 | 100 | 150 | 200 | 300 | 400 | 500 | 600 | 700 | 800 | 1000 | 1500 | 2000 | 3000 | 4000 | 5000 | 6000 | 7000 | 8333 | 10000 |
| G 1/4 | DN 15 | HL m/100m | 29.9 | | | | | | | | | | | | | | | | | | | | |
| | | v m/s | 1.6 | | | | | | | | | | | | | | | | | | | | |
| G 1/4 | DN 20 | HL m/100m | 7.4 | 56.3 | | | | | | | | | | | | | | | | | | | |
| | | v m/s | 0.9 | 2.7 | | | | | | | | | | | | | | | | | | | |
| G 1 | DN 25 | HL m/100m | 0.7 | 19 | 68.6 | | | | | | | | | | | | | | | | | | |
| | | v m/s | 0.3 | 1.7 | 3.4 | | | | | | | | | | | | | | | | | | |
| G 1 1/4 | DN 32 | HL m/100m | 0.3 | 5.7 | 20.6 | 43.6 | 74.4 | | | | | | | | | | | | | | | | |
| | | v m/s | 0.2 | 1 | 2.1 | 3.1 | 4.1 | | | | | | | | | | | | | | | | |
| G 1 1/2 | DN 40 | HL m/100m | | 1.9 | 6.9 | 14.7 | 25.1 | 53.1 | 90.5 | | | | | | | | | | | | | | |
| | | v m/s | | 0.7 | 1.3 | 2 | 2.7 | 4 | 5.3 | | | | | | | | | | | | | | |
| G 2 | DN 50 | HL m/100m | | 0.6 | 2.3 | 5 | 8.5 | 17.9 | 30.5 | 46.2 | 64.7 | 86.1 | | | | | | | | | | | |
| | | v m/s | | 0.4 | 0.8 | 1.3 | 1.7 | 2.5 | 3.4 | 4.2 | 5.1 | 5.9 | | | | | | | | | | | |
| G 2 1/2 | DN 65 | HL m/100m | | 0.2 | 0.7 | 1.4 | 2.4 | 5 | 8.5 | 12.9 | 18 | 24 | 30.7 | 46.4 | | | | | | | | | |
| | | v m/s | | 0.3 | 0.5 | 0.8 | 1 | 1.5 | 2 | 2.5 | 3 | 3.5 | 4 | 5 | | | | | | | | | |
| | DN 80 | HL m/100m | | | | 0.5 | 0.9 | 1.8 | 3.1 | 4.7 | 6.6 | 8.7 | 11.2 | 16.9 | 35.8 | 60.9 | | | | | | | |
| | | v m/s | | | | 0.5 | 0.7 | 1 | 1.3 | 1.7 | 2 | 2.3 | 2.7 | 3.3 | 5 | 6.6 | | | | | | | |
| | DN 100 | HL m/100m | | | | | | 0.6 | 1 | 1.6 | 2.2 | 2.9 | 3.8 | 5.7 | 12.1 | 20.6 | 43.6 | 74.2 | | | | | |
| | | v m/s | | | | | | 0.6 | 0.8 | 1.1 | 1.3 | 1.5 | 1.7 | 2.1 | 3.2 | 4.2 | 6.4 | 8.5 | | | | | |
| | DN 125 | HL m/100m | | | | | | | | | 0.7 | 1 | 1.3 | 1.9 | 4.1 | 6.9 | 14.7 | 25 | 37.8 | 53 | 70.5 | | |
| | | v m/s | | | | | | | | | 0.8 | 1 | 1.1 | 1.4 | 2 | 2.7 | 4.1 | 5.4 | 6.8 | 8.1 | 9.5 | | |
| | DN 150 | HL m/100m | | | | | | | | | | | 0.5 | 0.8 | 1.7 | 2.9 | 6 | 10.3 | 15.6 | 21.8 | 29 | 40.1 | 56.2 |
| | | v m/s | | | | | | | | | | | 0.8 | 0.9 | 1.4 | 1.9 | 2.8 | 3.8 | 4.7 | 5.7 | 6.6 | 7.9 | 9.4 |
| | DN 200 | HL m/100m | | | | | | | | | | | | 0.2 | 0.4 | 0.7 | 1.5 | 2.5 | 3.8 | 5.4 | 7.1 | 9.9 | 13.8 |
| | | v m/s | | | | | | | | | | | | 0.5 | 0.8 | 1.1 | 1.6 | 2.1 | 2.7 | 3.2 | 3.7 | 4.4 | 5.3 |
| | DN 250 | HL m/100m | | | | | | | | | | | | | | 0.2 | 0.5 | 0.9 | 1.3 | 1.8 | 2.4 | 3.3 | 4.7 |
| | | v m/s | | | | | | | | | | | | | | 0.7 | 1 | 1.4 | 1.7 | 2 | 2.4 | 2.8 | 3.4 |
| | DN 300 | HL m/100m | | | | | | | | | | | | | | | 0.2 | 0.4 | 0.5 | 0.7 | 1 | 1.4 | 1.9 |
| | | v m/s | | | | | | | | | | | | | | | 0.7 | 0.9 | 1.2 | 1.1 | 1.7 | 2 | 2.4 |

Q = Flow
HL = Head loss, m per 100 m.

V = Flow velocity: max 1,5 m/s for suction and 3 m/s for delivery.
“tables with the Hazen-Williams formula”

**Table no. 2 Head loss in cm for bends, gate valves, foot valves and check valves**

| Water flow velocity | Elbows α | | | | | α = 90 sweep elbow | | | | | Gate valves | Foot valves | Check valves |
|---|---|---|---|---|---|---|---|---|---|---|---|---|---|
| m/sec | α = 30 | α = 40 | α = 60 | α = 80 | α = 90 | d/R = 0,4 | d/R = 0,6 | d/R = 0,8 | d/R = 1 | d/R = 1,5 | | | |
| 0,4 | 0,43 | 0,52 | 0,71 | 1,0 | 1,2 | 0,11 | 0,13 | 0,16 | 0,23 | 0,43 | 0,23 | 32 | 31 |
| 0,5 | 0,67 | 0,81 | 1,1 | 1,6 | 1,9 | 0,18 | 0,21 | 0,26 | 0,37 | 0,67 | 0,37 | 33 | 32 |
| 0,6 | 0,97 | 1,2 | 1,6 | 2,3 | 2,8 | 0,25 | 0,29 | 0,36 | 0,52 | 0,97 | 0,52 | 34 | 32 |
| 0,7 | 1,35 | 1,65 | 2,2 | 3,2 | 3,9 | 0,34 | 0,40 | 0,48 | 0,70 | 1,35 | 0,70 | 35 | 32 |
| 0,8 | 1,7 | 2,1 | 2,8 | 4,0 | 4,8 | 0,45 | 0,53 | 0,64 | 0,93 | 1,7 | 0,95 | 36 | 33 |
| 0,9 | 2,2 | 2,7 | 3,6 | 5,2 | 6,2 | 0,57 | 0,67 | 0,82 | 1,18 | 2,2 | 1,20 | 37 | 34 |
| 1,0 | 2,7 | 3,3 | 4,5 | 6,4 | 7,6 | 0,7 | 0,82 | 1,0 | 1,45 | 2,7 | 1,45 | 38 | 35 |
| 1,5 | 6,0 | 7,3 | 10 | 14 | 17 | 1,6 | 1,9 | 2,3 | 3,3 | 6 | 3,3 | 47 | 40 |
| 2,0 | 11 | 14 | 18 | 26 | 31 | 2,8 | 3,3 | 4,0 | 5,8 | 11 | 5,8 | 61 | 48 |
| 2,5 | 17 | 21 | 28 | 40 | 48 | 4,4 | 5,2 | 6,3 | 9,1 | 17 | 9,1 | 78 | 58 |
| 3,0 | 25 | 30 | 41 | 60 | 70 | 6,3 | 7,4 | 9 | 13 | 25 | 13 | 100 | 71 |
| 3,5 | 33 | 40 | 55 | 78 | 93 | 8,5 | 10 | 12 | 18 | 33 | 18 | 123 | 85 |
| 4,0 | 43 | 52 | 70 | 100 | 120 | 11 | 13 | 16 | 23 | 42 | 23 | 150 | 100 |
| 4,5 | 55 | 67 | 90 | 130 | 160 | 14 | 21 | 26 | 37 | 55 | 37 | 190 | 120 |
| 5,0 | 67 | 82 | 110 | 160 | 190 | 18 | 29 | 36 | 52 | 67 | 52 | 220 | 140 |

# Technical appendix

calpeda®

## General data

Tables no. 1.1 Pressure drops in PE 100 - PFA polyethylene pipes 16

| Pipe | Pipe | Q m3/h | 1 | 3 | 6 | 9 | 12 | 18 | 24 | 30 | 36 | 42 | 48 | 60 | 90 | 120 | 180 | 240 | 300 | 360 | 420 | 500 | 600 |
|---|---|---|---|---|---|---|---|---|---|---|---|---|---|---|---|---|---|---|---|---|---|---|---|
| Ø est. mm | Ø int. mm | Q l/min | 16 | 50 | 100 | 150 | 200 | 300 | 400 | 500 | 600 | 700 | 800 | 1000 | 1500 | 2000 | 3000 | 4000 | 5000 | 6000 | 7000 | 8333 | 10000 |
| 32 | 26 | HL m/100m | 1.4 | 10.4 | 37.5 | 79.4 | | | | | | | | | | | | | | | | | |
| | | v m/s | 0.5 | 1.6 | 3.1 | 4.7 | | | | | | | | | | | | | | | | | |
| 40 | 32.6 | HL m/100m | 0.5 | 3.4 | 12.4 | 26.4 | 44.9 | | | | | | | | | | | | | | | | |
| | | v m/s | 0.33 | 1 | 2 | 3 | 3.99 | | | | | | | | | | | | | | | | |
| 50 | 40.8 | HL m/100m | 0.2 | 1.2 | 4.2 | 8.8 | 15.1 | 31.9 | 54.4 | | | | | | | | | | | | | | |
| | | v m/s | 0.2 | 0.6 | 1.3 | 1.9 | 2.5 | 3.8 | 5.1 | | | | | | | | | | | | | | |
| 63 | 51.4 | HL m/100m | | 0.4 | 1.4 | 2.9 | 4.9 | 10.4 | 17.7 | 26.7 | 37.4 | 49.8 | 63.7 | | | | | | | | | | |
| | | v m/s | | 0.4 | 0.8 | 1.2 | 1.6 | 2.4 | 3.2 | 4 | 4.8 | 5.6 | 6.4 | | | | | | | | | | |
| 75 | 61.4 | HL m/100m | | 0.2 | 0.6 | 1.2 | 2.1 | 4.4 | 7.4 | 11.2 | 15.7 | 20.9 | 26.8 | 40.5 | | | | | | | | | |
| | | v m/s | | 0.3 | 0.6 | 0.8 | 1.1 | 1.7 | 2.3 | 2.8 | 3.4 | 3.9 | 4.5 | 5.6 | | | | | | | | | |
| 90 | 73.6 | HL m/100m | | | 0.2 | 0.5 | 0.9 | 1.8 | 3.1 | 4.6 | 6.5 | 8.7 | 11.1 | 16.8 | 35.5 | 60.5 | | | | | | | |
| | | v m/s | | | 0.4 | 0.6 | 0.8 | 1.2 | 1.6 | 2 | 2.4 | 2.7 | 3.1 | 3.9 | 5.9 | 7.8 | | | | | | | |
| 110 | 90 | HL m/100m | | | | 0.2 | 0.3 | 0.7 | 1.2 | 1.7 | 2.4 | 3.3 | 4.2 | 6.3 | 13.3 | 22.7 | 48.1 | | | | | | |
| | | v m/s | | | | 0.4 | 0.5 | 0.8 | 1 | 1.3 | 1.6 | 1.8 | 2.1 | 2.6 | 3.9 | 5.2 | 7.9 | | | | | | |
| 125 | 102.2 | HL m/100m | | | | 0.1 | 0.2 | 0.4 | 0.6 | 0.9 | 1.3 | 1.7 | 2.2 | 3.4 | 7.2 | 12.2 | 25.9 | 44.1 | | | | | |
| | | v m/s | | | | 0.3 | 0.4 | 0.6 | 0.8 | 1 | 1.2 | 1.4 | 1.6 | 2 | 3 | 4.1 | 6.1 | 8.1 | | | | | |
| 140 | 114.6 | HL m/100m | | | | 0.1 | 0.1 | 0.2 | 0.4 | 0.5 | 0.8 | 1 | 1.3 | 1.9 | 4.1 | 7 | 14.8 | 25.3 | 38.2 | 53.5 | | | |
| | | v m/s | | | | 0.2 | 0.3 | 0.5 | 0.6 | 0.8 | 1 | 1.1 | 1.3 | 1.6 | 2.4 | 3.2 | 4.8 | 6.5 | 8.1 | 9.7 | | | |
| 160 | 130.8 | HL m/100m | | | | | 0.1 | 0.1 | 0.2 | 0.3 | 0.4 | 0.5 | 0.7 | 1 | 2.2 | 3.7 | 7.8 | 13.3 | 20.1 | 28.1 | 37.4 | | |
| | | v m/s | | | | | 0.2 | 0.4 | 0.5 | 0.6 | 0.7 | 0.9 | 1 | 1.2 | 1.9 | 2.5 | 3.7 | 5 | 6.2 | 7.4 | 8.7 | | |
| 180 | 147.2 | HL m/100m | | | | | | 0.1 | 0.1 | 0.2 | 0.2 | 0.3 | 0.4 | 0.6 | 1.2 | 2.1 | 4.4 | 7.5 | 11.3 | 15.8 | 21 | 29.1 | 40.7 |
| | | v m/s | | | | | | 0.3 | 0.4 | 0.5 | 0.6 | 0.7 | 0.8 | 1 | 1.5 | 2 | 2.9 | 3.9 | 4.9 | 5.9 | 6.9 | 8.2 | 9.8 |
| 200 | 163.6 | HL m/100m | | | | | | | 0.1 | 0.1 | 0.1 | 0.2 | 0.2 | 0.3 | 0.7 | 1.2 | 2.6 | 4.5 | 6.7 | 9.5 | 12.6 | 17.4 | 24.4 |
| | | v m/s | | | | | | | 0.32 | 0.4 | 0.48 | 0.55 | 0.63 | 0.79 | 1.19 | 1.59 | 2.38 | 3.17 | 3.96 | 4.76 | 5.55 | 6.61 | 7.93 |
| 225 | 184 | HL m/100m | | | | | | | | 0.1 | 0.1 | 0.1 | 0.1 | 0.2 | 0.4 | 0.7 | 1.5 | 2.5 | 3.8 | 5.3 | 7.1 | 9.8 | 13.7 |
| | | v m/s | | | | | | | | 0.3 | 0.4 | 0.4 | 0.5 | 0.6 | 0.9 | 1.3 | 1.9 | 2.5 | 3.1 | 3.8 | 4.4 | 5.2 | 6.3 |
| 250 | 204.6 | HL m/100m | | | | | | | | | | 0.1 | 0.1 | 0.1 | 0.2 | 0.4 | 0.9 | 1.5 | 2.3 | 3.2 | 4.2 | 5.8 | 8.2 |
| | | v m/s | | | | | | | | | | 0.4 | 0.4 | 0.5 | 0.8 | 1 | 1.5 | 2 | 2.5 | 3 | 3.5 | 4.2 | 5.1 |
| 280 | 229.2 | HL m/100m | | | | | | | | | | | | 0.1 | 0.1 | 0.2 | 0.5 | 0.9 | 1.3 | 1.8 | 2.4 | 3.4 | 4.7 |
| | | v m/s | | | | | | | | | | | | 0.4 | 0.6 | 0.8 | 1.2 | 1.6 | 2 | 2.4 | 2.8 | 3.4 | 4 |
| 315 | 257.8 | HL m/100m | | | | | | | | | | | | | 0.1 | 0.1 | 0.3 | 0.5 | 0.7 | 1 | 1.4 | 1.9 | 2.7 |
| | | v m/s | | | | | | | | | | | | | 0.5 | 0.6 | 1 | 1.3 | 1.6 | 1.9 | 2.2 | 2.7 | 3.2 |
| 355 | 290.6 | HL m/100m | | | | | | | | | | | | | | 0.1 | 0.2 | 0.3 | 0.4 | 0.6 | 0.8 | 1.1 | 1.5 |
| | | v m/s | | | | | | | | | | | | | | 0.5 | 0.8 | 1 | 1.3 | 1.5 | 1.8 | 2.1 | 2.5 |
| 400 | 327.4 | HL m/100m | | | | | | | | | | | | | | | 0.1 | 0.2 | 0.2 | 0.3 | 0.4 | 0.6 | 0.8 |
| | | v m/s | | | | | | | | | | | | | | | 0.6 | 0.8 | 1 | 1.2 | 1.4 | 1.6 | 2 |
| 450 | 368.2 | HL m/100m | | | | | | | | | | | | | | | 0.1 | 0.1 | 0.1 | 0.2 | 0.2 | 0.3 | 0.5 |
| | | v m/s | | | | | | | | | | | | | | | 0.5 | 0.6 | 0.8 | 0.9 | 1.1 | 1.3 | 1.6 |
| 500 | 409.2 | HL m/100m | | | | | | | | | | | | | | | | 0.1 | 0.1 | 0.1 | 0.1 | 0.2 | 0.3 |
| | | v m/s | | | | | | | | | | | | | | | | 0.5 | 0.6 | 0.8 | 0.9 | 1.1 | 1.3 |

Q = Flow
HL = Head loss, m per 100 m.

V= Flow velocity: max 1,5 m/s for suction and 3 m/s for delivery.
“tables with the Hazen-Williams formula”

# Technical appendix

## Electric pumps powered by a frequency converter

Using a frequency converter to power an electric pump makes it possible to operate at different operating points depending on the system requirements and the desired hydraulic or mechanical performance. However, this is to the detriment of the quality of the voltage and therefore also of the current circulating in the motor. Figure 1 shows the converter output current sinusoid with “noise”, i.e. sinusoids with high frequency orders but low amplitude.

High frequency parasitic capacitances have a very low impedence and therefore allow current harmonics to circulate in the motor housing and in the motor bearings, thus compromising correct operation. The most common methods to reduce this phenomenon are mainly:

- shielding of the power cable with connection to the earthing system;
- use of a dv/dt or sinusoidal filter at the converter output;
- use of an insulated bearing (e.g. made of ceramic).

dv/dt filters consist of inductors and capacitors with a cut-off frequency higher than the switching frequency of the converter. These filters lower the voltage rise time, thus making the current more sinusoidal. Figure 2 shows that the current sinusoid has a lower harmonic content than the circulating current without a dv/dt filter. Standard IEC 60034-17 requires that the rise time value (dv/dt) must have a supply voltage based on the peak values it takes on, so that the current cannot damage the bearings (figure 3).

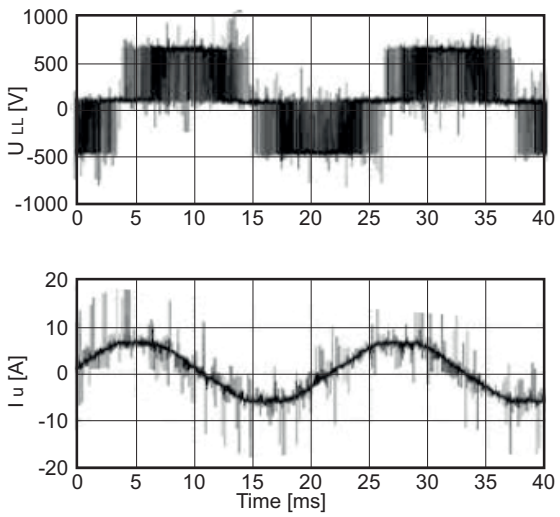


Figure 1 Voltage and current trend without dv/dt filter

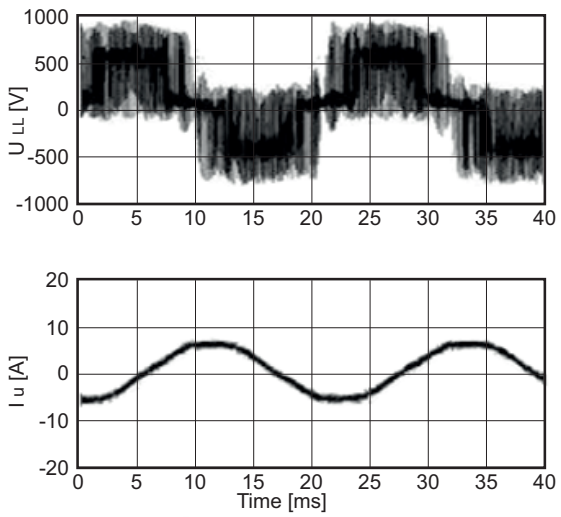


Figure 2 Voltage and current trend with dv/dt filter

ULL (V) = Pulse voltage

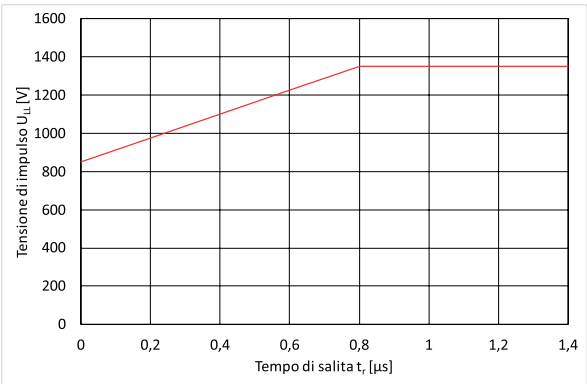


tr (us) (V) = Rise time

Figure 3: Permissible limit curve of ULL pulse voltage at the motor terminals as a function of the rise time tr

# Technical appendix

## EFFICIENCY OF ELECTRIC MOTORS

COMMISSION REGULATION (EU) 2019/1781

With Directive 2009/125/EC, the European Parliament established a framework for the development of ecodesign specifications applicable to energy-consuming products, specifying the performance levels that machines sold on the European market must achieve.

**This regulation applies to the following products:**

- a) brushless electric induction motors, switches, slip rings or electrical connections to the rotor, designed to operate at a sinusoidal voltage of 50 Hz, 60 Hz or 50/60 Hz, which:
- i) have two, four, six or eight poles;
  ii) have a rated voltage (UN) greater than 50 V and up to 1 000 V, included;
  iii) have a rated power (PN) between 0.12 kW and 1 000 kW, included;
  iv) have characteristics based on continuous operation; and
  v) are designed for operation with direct start-up;
- b) variable speed drives with 3 input phases which:
- i) are designed to operate with a motor as defined in letter a), with a rated motor power range between 0.12 kW and 1 000 kW;
  ii) have a rated voltage greater than 100 V and up to 1 000 V, included, with alternating current (AC);
  iii) have only one AC output voltage.

**This Regulation shall not apply to:**

a) motors fully built into a product (e.g. in a gearbox, pump, fan or compressor) for which it is not possible to test the energy performance independently of the product, even with a temporary shield and a front bearing; the motor must share common components (apart from connectors such as bolts) with the driven unit (e.g. an axle or housing) and it is not designed so that it can be completely separated from the driven unit and operate independently. The separation process makes the motor inoperative;
b) motors with a built-in variable speed drive (compact variable speed drives) for which it is not possible to test the energy performance independently of the variable speed drive;
c) motors with a built-in brake which is an integral part of the motor and cannot be removed or powered by a separate power source during the motor efficiency test;
d) motors specially designed and intended to operate only:
I) at altitudes above 4000 metres above sea level;
II) at ambient air temperatures above 60°C;
III) at a maximum operating temperature above 400°C;
IV) at air temperatures below -30°C;
or
V) at a product inlet water coolant temperature below 0°C or above 32°C;
e) motors specially designed to operate fully immersed in a liquid;
f) motors with specific characteristics to ensure the safety of nuclear plants as defined in Article 3 of Council Directive 2009/71/Euratom (8);
g) explosion-proof motors specially designed and certified for work in mines, as defined in Annex I, section 1, of Directive 2014/34/EU of the European Parliament and of the Council (9);
h) motors in wireless or battery-operated equipment;
i) motors in portable equipment, the weight of which is held by hand during operation;
j) motors in hand-driven mobile equipment carried during operation;
k) motors equipped with mechanical switches;
l) Totally Enclosed Non-Ventilated (TENV) motors;
m) motors placed on the market before 1 July 2029 to replace identical motors built into products placed on the market before 1 July 2022 and specifically marketed as such;
n) multiple speed motors, i.e. motors with multiple windings or one switchable winding, with a different number of poles and speeds;
o) motors specially designed for electrically driven vehicles.

This regulation does not apply to the following variable speed drives:

a) variable speed drives built into a product and whose energy performance cannot be tested independently of the product, i.e. an attempt to do so would make the variable speed drive or product inoperative;
b) variable speed drives with specific characteristics to ensure the safety of nuclear plants as defined in Article 3 of Council Directive 2009/71/Euratom;
c) regenerative variable speed drives;
d) sinusoidal variable speed drives.

# Technical appendix

COMMISSION REGULATION (EU) 2019/1781

**Each ecodesign specification applies according to the following timetable:**

1. ENERGY EFFICIENCY REQUIREMENTS FOR MOTORS

Energy efficiency requirements for motors shall apply according to the following timetable:

(a) from 1 July 2021:
(i) the energy efficiency of three-phase motors with a rated output equal to or above 0,75 kW and equal to or below 1 000 kW, with 2, 4, 6 or 8 poles, which are not Ex eb increased safety motors, shall correspond to at least the IE3 efficiency level set out in Table 2 of Directive 2019/1781/ Euratom;
(ii) the energy efficiency of three-phase motors with a rated output equal to or above 0,12 kW and below 0,75 kW, with 2, 4, 6 or 8 poles, which are not Ex eb increased safety motors, shall correspond to at least the IE2 efficiency level set out in Table 1 of Directive 2019/1781/ Euratom;
(b) from 1 July 2023:
(i) the energy efficiency of Ex eb increased safety motors with a rated output equal to or above 0,12 kW and equal to or below 1 000 kW, with 2, 4, 6 or 8 poles, and single-phase motors with a rated output equal to or above 0,12 kW shall correspond to at least the IE2 efficiency level set out in Table 1 of Directive 2019/1781/ Euratom;
(ii) the energy efficiency of three-phase motors which are not brake motors, Ex eb increased safety motors, or other explosion-protected motors, with a rated output equal to or above 75 kW and equal to or below 200 kW, with 2, 4, or 6 poles, shall correspond to at least the IE4 efficiency level set out in Table 3 of Directive 2019/1781/ Euratom.

2. EFFICIENCY SPECIFICATIONS OF VARIABLE SPEED DRIVES

The efficiency specifications of variable speed drives apply as follows:

from 1 July 2021, the power losses of variable speed drives designed to operate with motors with a rated power equal to or greater than 0.12 kW and equal to or lower than 1 000 kW do not exceed the maximum power losses corresponding to efficiency level IE2.

The energy efficiency for variable speed drives, expressed in international energy efficiency classes (IE), is determined on the bases of power losses as follows: the maximum power losses of class IE2 are 25% lower than the reference value in table 6 of Regulation 2019/1781.

# Technical appendix

## EFFICIENCY OF ELECTRIC MOTORS

**Summary table of the levels of efficiency as expected in IEC 60034-30-1**

**2 - Pole**

| Rated power | Efficiency % | | |
|---|---|---|---|
| kW | IE3 | IE3 | IE4 |
| 0.25 | 64.8 | 69.7 | 74.3 |
| 0.3 | 67.1 | 71.6 | 76.1 |
| 0.33 | 68.2 | 72.6 | 77.1 |
| 0.37 | 69.5 | 73.8 | 78.1 |
| 0.45 | 71.7 | 75.8 | 79.9 |
| 0.55 | 74.1 | 77.8 | 81.5 |
| 0.75 | 77.4 | 80.7 | 83.5 |
| 1.1 | 79.6 | 82.7 | 85.2 |
| 1.5 | 81.3 | 84.2 | 86.5 |
| 1.8 | 82.2 | 85 | 87.3 |
| 2.2 | 83.2 | 85.9 | 88 |
| 3 | 84.6 | 87.1 | 89.1 |
| 3.7 | 85.5 | 87.8 | 89.7 |
| 4 | 85.8 | 88.1 | 90 |
| 5.5 | 87 | 89.2 | 90.9 |
| 7.5 | 88.1 | 90.1 | 91.7 |
| 9.2 | 88.8 | 90.7 | 92.2 |
| 11 | 89.4 | 91.2 | 92.6 |
| 15 | 90.3 | 91.9 | 93.3 |
| 18.5 | 90.9 | 92.4 | 93.7 |
| 22 | 91.3 | 92.7 | 94 |
| 30 | 92 | 93.3 | 94.5 |
| 37 | 92.5 | 93.7 | 94.8 |
| 45 | 92.9 | 94 | 95 |
| 55 | 93.2 | 94.3 | 95.3 |
| 75 | 93.8 | 94.7 | 95.6 |
| 90 | 94.1 | 95 | 95.8 |

**2 poli**

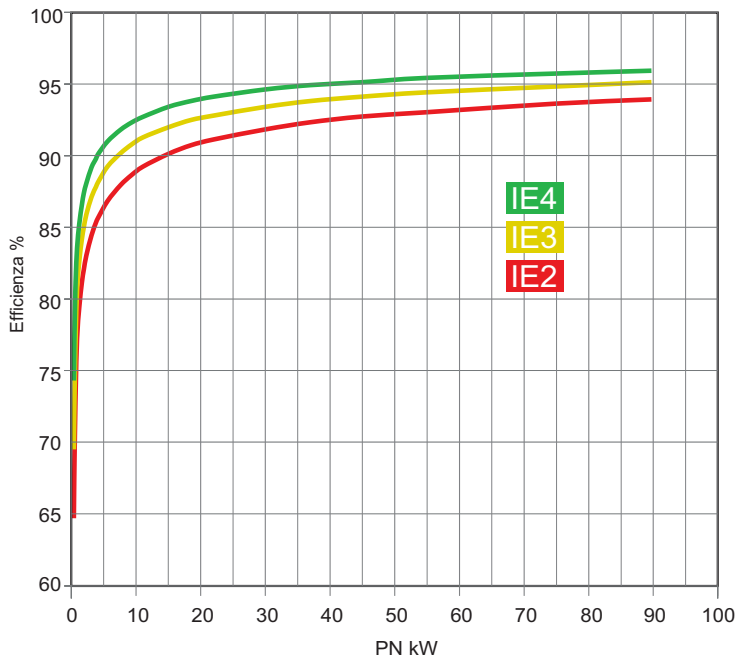


**4-pole**

| Rated power | Efficiency % | | |
|---|---|---|---|
| kW | IE2 | IE3 | IE4 |
| 0.25 | 68.5 | 73.5 | 77.9 |
| 0.3 | 70.5 | 75.3 | 79.5 |
| 0.33 | 71.5 | 76.2 | 80.3 |
| 0.37 | 72.7 | 77.3 | 81.1 |
| 0.45 | 74.8 | 79 | 82.5 |
| 0.55 | 77.1 | 80.8 | 83.9 |
| 0.75 | 79.6 | 82.5 | 85.7 |
| 1.1 | 81.4 | 84.1 | 87.2 |
| 1.5 | 82.8 | 85.3 | 88.2 |
| 1.8 | 83.5 | 86 | 88.8 |
| 2.2 | 84.3 | 86.7 | 89.5 |
| 3 | 85.5 | 87.7 | 90.4 |
| 3.7 | 86.3 | 88.4 | 90.9 |
| 4 | 86.6 | 88.6 | 91.1 |
| 5.5 | 87.7 | 89.6 | 91.9 |
| 7.5 | 88.7 | 90.4 | 92.6 |
| 9.2 | 89.3 | 91 | 93 |
| 11 | 89.8 | 91.4 | 93.3 |
| 15 | 90.6 | 92.1 | 93.9 |
| 18.5 | 91.2 | 92.6 | 94.2 |
| 22 | 91.6 | 93 | 94.5 |
| 30 | 92.3 | 93.6 | 94.9 |
| 37 | 92.7 | 93.9 | 95.2 |
| 45 | 93.1 | 94.2 | 95.4 |
| 55 | 93.5 | 94.6 | 95.7 |
| 75 | 94 | 95 | 96 |
| 90 | 94.2 | 95.2 | 96.1 |

**4 poli**

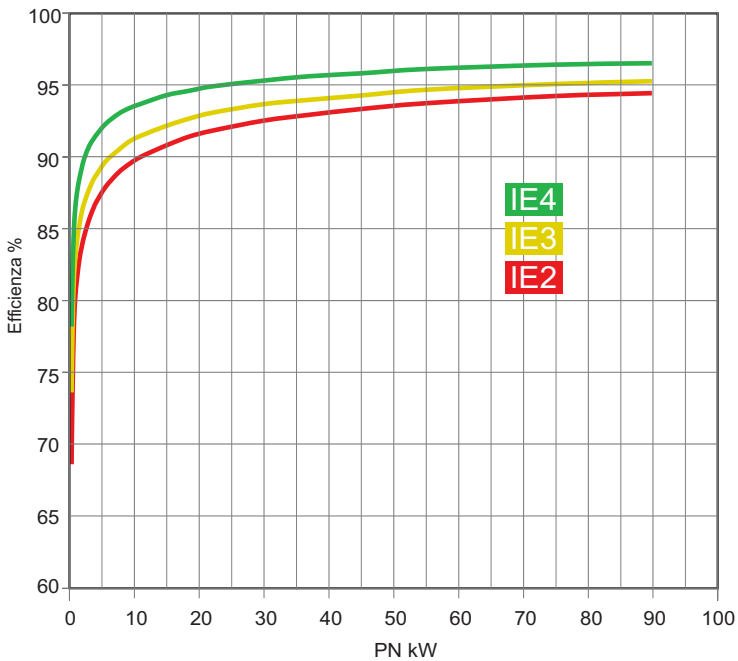


**The efficiency value (IE) of Calpeda motors is available at www.calpeda.com**

# Technical appendix

## EFFICIENCY OF WATER PUMPS

**Directive of the European Parliament COMMISSION REGULATION (EC) No 547/2012**

With the Eco-design Directive of Energy Using Products (ErP Directive – Energy-related Products) the European Union wants to improve the design of equipment that “consume” significant energy (e.g. televisions, refrigerators, washing machines, boilers,

The objective of the Directive is to force manufacturers and importers to produce and distribute products with high energy efficiency, and carbon output.The criteria for eco-design will be an integral part of the declaration of conformity (CE), which is a necessary requirement/mark for products being sold in the EU.

**This Regulation shall apply to:**
The Regulation 547/2012/EC defines the eco-design requirements for marketing centrifugal water pumps in the European market, even if they are integrated in other products
The Regulation provides the introduction and the calculation of a minimum efficiency index (MEI).
The pumps involved in the Regulation are:
- End suction own bearing water pumps (ESOB) designed for pressures up to 16 bar, a maximum shaft power of 150 kW, a maximum head of 90 m at nominal speed of 1450 rpm and a maximum head of 140 m at nominal speed of 2900 rpm;
- End suction close coupled water pumps (ESCC) designed for pressures up to 16 bar, a maximum shaft power of 150 kW, a maximum head of 90 m at nominal speed of 1450 rpm and a maximum head of 140 m at nominal speed of 2900 rpm;
- End suction close coupled in-line water pumps (ESCCi) designed for pressures up to 16 bar, a maximum shaft power of 150 kW, a maximum head of 90 m at nominal speed of 1450 rpm and a maximum head of 140 m at nominal speed of 2900 rpm;
- Vertical multistage water pumps (MS-V) designed for pressures up to 25 bar, with a nominal speed of 2900 rpm and a maximum flow of 100 m3/h (27,78·10–3 m3/s);
- Submersible multistage water pumps (MSS) with a nominal outer diameter of 4″ (10,16 cm) or 6″ (15,24 cm) designed to operate in a borehole at nominal speed of 2900 rpm, at operating temperatures within a range of 0 °C and 90 °C;

**This regulation shall apply in accordance with the following timetable:**
- a) Water pumps designed specifically for pumping clean water at temperatures below – 10 °C or above 120 °C.
- b) Water pumps designed only for fire-fighting applications.
- c) Displacement water pumps.
- d) Self-priming water pumps.

The information on benchmark efficiency is available on the web site www.europump.org/efficiencycharts
The MEI value of Calpeda pumps is available on the web site www.calpeda.com

**Regulation (EU) No 547/2012**

- The benchmark for most efficient water pumps is MEI ≥ 0,70.
- The efficiency of a pump with a trimmed impeller is usually lower than that of a pump with the full impeller diameter. The trimming of the impeller will adapt the pump to a fixed duty point, leading to reduced energy consumption. The minimum efficiency index (MEI) is based on the full impeller diameter.
- The operation of this water pump with variable duty points may be more efficient and economic when controlled, for example, by the use of a variable speed drive that matches the pump duty to the system.

# Technical appendix

Catalogue dimension tolerances

Pumps

| from 0mm to 30mm | over 30mm up to 120mm | over 120 mm up to 400mm | over 400mm up to 1000mm | over 1000mm up to 2000mm | over 2000mm up to 4000mm |
|---|---|---|---|---|---|
| ±1mm | ±1,5mm | ±2,5mm | ±4mm | ±6mm | ±8mm |

For NMS, NMS4, N, N4, MXV pumps, the fm and motor dimensions are subject to variation depending on the motor used.

Pressure boosting plants

| from 0mm to 30mm | over 30mm up to 120mm | over 120 mm up to 400mm | over 400mm up to 1000mm | over 1000mm up to 2000mm | over 2000mm up to 4000mm |
|---|---|---|---|---|---|
| ±5mm | ±71,5mm | ±12,5mm | ±20mm | ±30mm | ±40mm |

# Calpeda in the World

Calpeda Pompes S.A.
19, Rue de la Communauté,
44140 Le Bignon – Francia
Tel: +33 2 40031330
info@calpeda.fr

Calpeda Ibérica, S.A.
Pol. Ind. Ca n'Oller - C/Valencia 17-19 Nave 1
08130 Santa Perpetua de la Mogoda – Spagna
Tel: +34 93 580 24 17
calpeda@calpedaiberica.com

Calpeda Pumpen Vertrieb GmbH
Philipp-Reis-Straße 2,
63755 Alzenau, Germania
Tel: +496023964330
info@calpeda.de

Calpeda Limited
6,8 Wedgwood Road Ind. Estate
Bicester Oxon OX26 4UL – Gran Bretagna
Tel: +44 1869 241441
pumps@calpeda.co.uk

Calpeda Pumps (Ireland) Ltd.
Unit 5, Old Quarry Campus –
Kilshane Park Blanchardstown
Co. Dublin 15 – Irlanda
Tel: +353 1 8612200
info@calpedaireland.com

Calpeda Pumps Southern Africa
Unit 3, Kingsley Close – Warbler Cl
7800 Cape Town – Sudafrica
Tel: +27 10 442 2200
pumps@calpeda.co.za

Calpeda Asia Pacific Pte Ltd
3, Gul Street 1
629316 – Singapore
Tel: +65 68984111
sales@calpeda-asiapac.com

Calpeda China Beijing Pump Co. Ltd.
No.15-12A South Jingsheng Four Street
Liandong U Valley Science Park
Tongzhou District 101102 – Beijing – Cina
Tel: +86 10 59770570/71/72
calpeda@calpeda.cn

Calpeda Korea Co, Ltd
508-B – 121, Digital-ro – Geumcheon-gu
08505 – Seoul Rep. of Corea
Tel: +82 31 4999550
calpedakr@calpedakorea.com

Calpeda Taiwan Co Ltd
No.367-1, Fongren Road – Renwu Township
81449 Kaohsiung County – Taiwan
Tel: +886 7 3723855
calpeda@calpeda.com.tw

Calpeda Malaysia Sdn Bhd
No 40, Jalan 5/KU6, Kaw Perindustrian Sg Puloh
42100 Klang Selangor – Malaysia
Tel: +60 3 3292 9022
enquiry@calpeda-asiapac.com

Calpeda Pumps Pty Ltd
3 Maritime Court
SA 5013 Gillman – Australia
Tel: +61 8 82688880
sales@calpeda.com.au

Calpeda Pumps India PVT Ltd
Sy nu.84/10 pallathal farm
RTO By pass Road,
Yelahanka Bengaluru-560064 - India
Tel: +91 9480809570….79
info_india@calpeda.it

Caprari Hellas SA
Industrial Area of Sindos
Municipality of Ehedorou
57022 Thessaloniki - Grecia
Tel. +30 2310 797967
info@caprari.gr

Caprari Tunisia SA
Rue Annaba - Z. Ind.elle Ben Arous
2013 Ben Arous - Tunisia
Tel. +216 79 390001
tunisie@caprari.com

Caprari Portugal LDA
Rua Matadouro Regional Lt 46 Armaz B/C
Zona Industrial
2005-002 Santarém - Portogallo
Tel. +351 243 350610
geral@caprariportugal.com

Calpeda S.p.A.
Via Roggia di Mezzo, 39 - 36050 Montorso Vicentino - Vicenza - Italy
Tel. + 39-0444 476 476
Web: www.calpeda.com - E-mail: info@calpeda.it

water passion